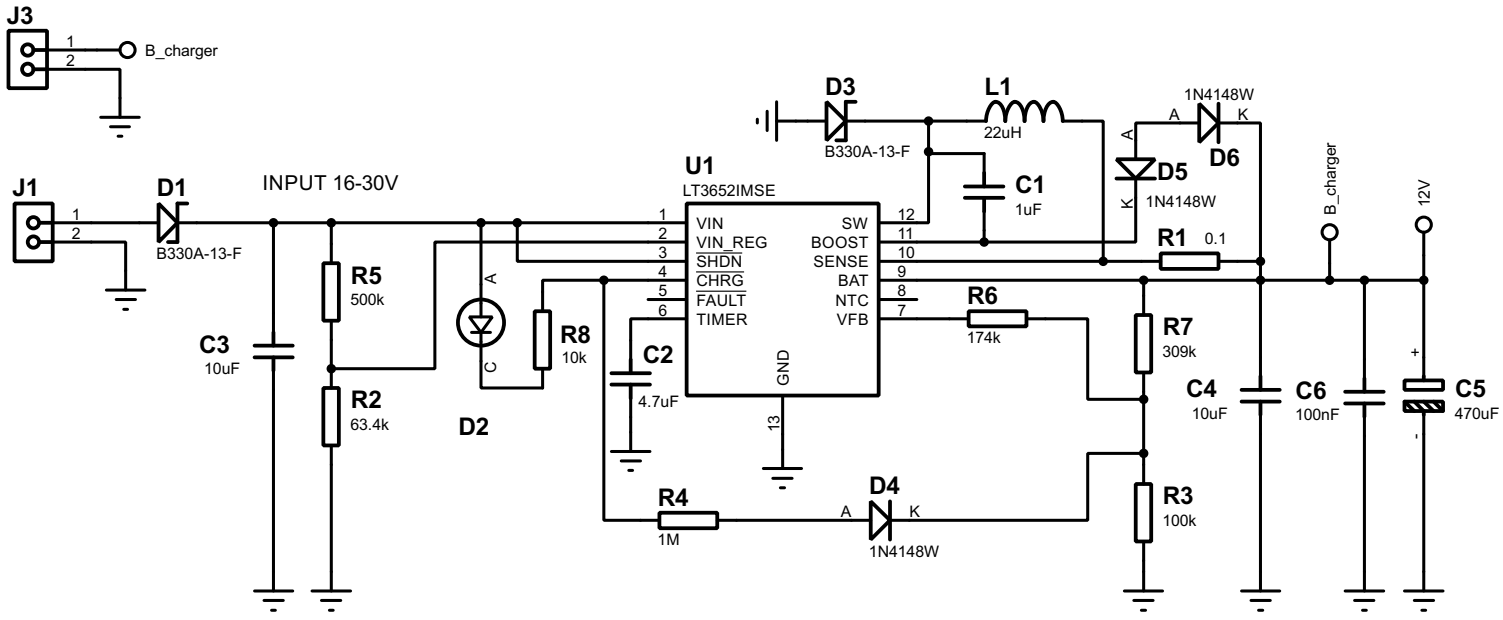
J3
B_charger
J1
D1
B330A-13-F
INPUT 16-30V
C3
10uF
R5
500k
R2
63.4k
D2
R8
10k
C2
4.7uF
U1
LT3652IMSE
VIN
VIN_REG
SHDN
CHRG
FAULT
TIMER
SW
BOOST
SENSE
BAT
NTC
VFB
GND
D3
B330A-13-F
L1
22uH
C1
1uF
D5
1N4148W
1N4148W
D6
R1
0.1
R6
174k
R7
309k
R3
100k
R4
1M
D4
1N4148W
C4
10uF
C6
100nF
C5
470uF
B_charger
12V

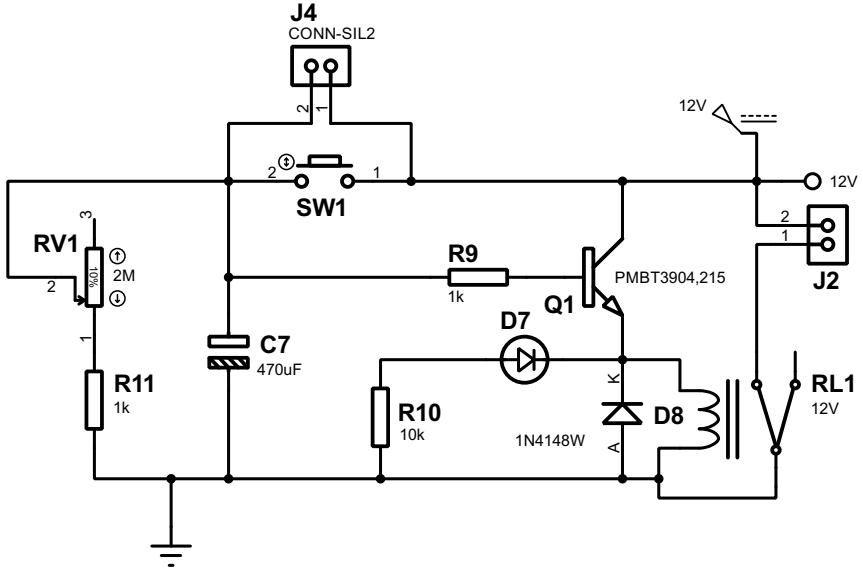
J4
CONN-SIL2
SW1
RV1
2M
R11
1k
C7
470uF
R9
1k
Q1
PMBT3904,215
D7
R10
10k
1N4148W
D8
12V
J2
RL1
12V