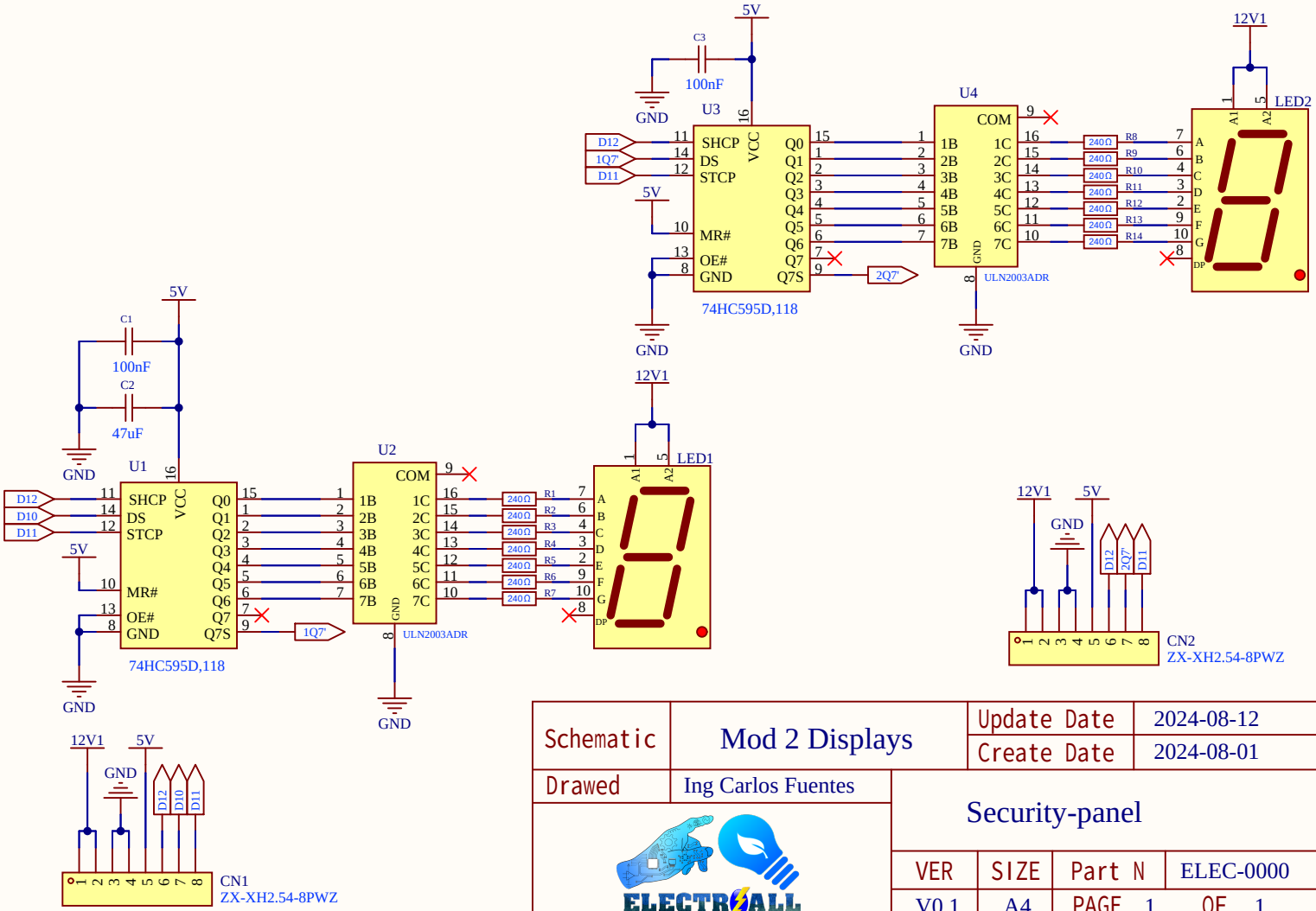

Schematic	Mod 2 Displays	Update Date	2024-08-12
		Create Date	2024-08-01
Drawed	Ing Carlos Fuentes	Security-panel	
		VER	SIZE	Part N	ELEC-0000
		V0.1	A4	PAGE 1	OF 1

Name :