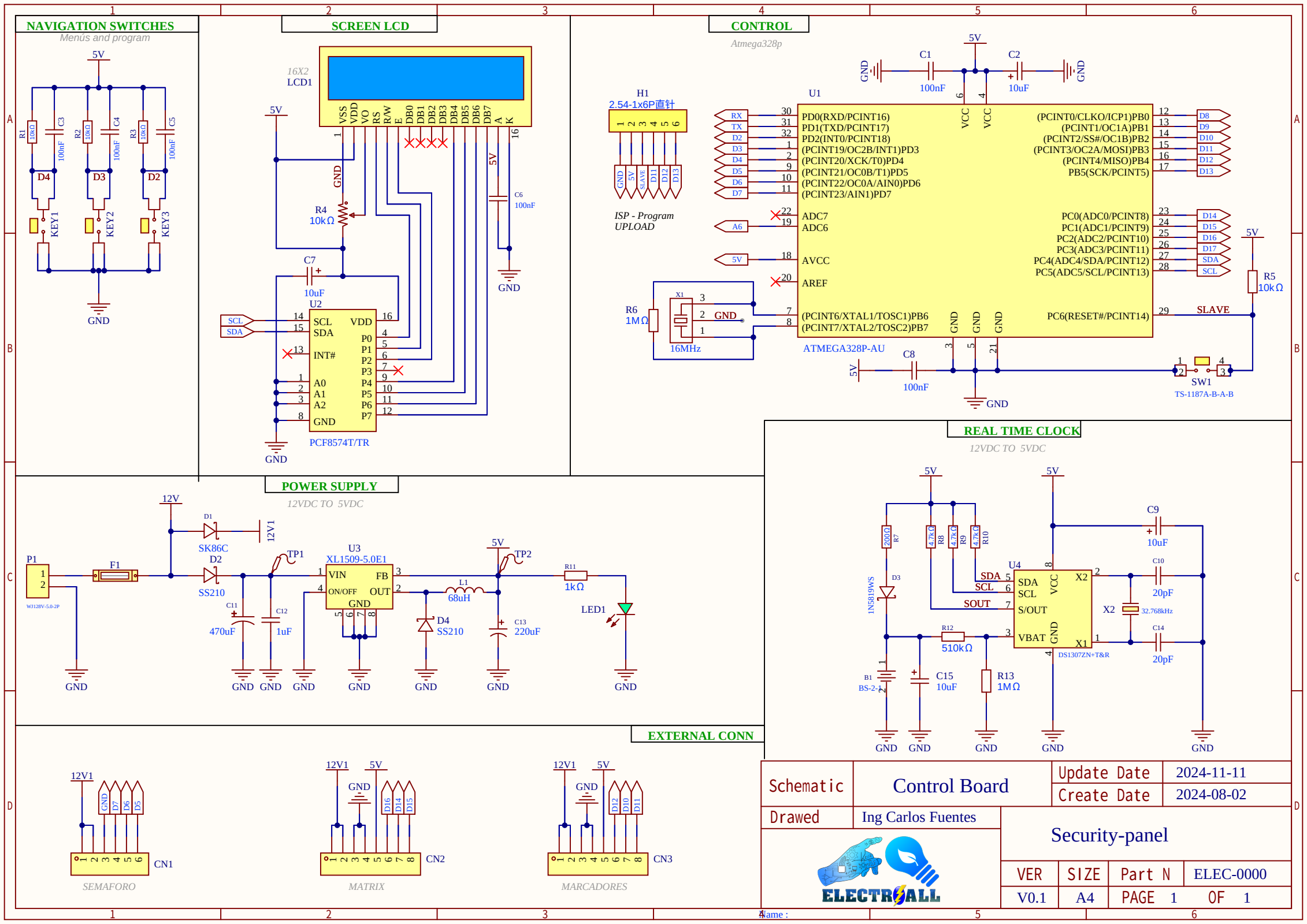
NAVIGATION SWITCHES
Menús and program
5V
R1 10kΩ
R2 10kΩ
R3 10kΩ
C3 100nF
C4 100nF
C5 100nF
D4
D3
D2
KEY1
KEY2
KEY3
GND
SCREEN LCD
16X2
LCD1
VSS VDD VO RS R/W E DB0 DB1 DB2 DB3 DB4 DB5 DB6 DB7 A K
R4 10kΩ
C7 10uF
C6 100nF
U2
SCL
SDA
INT#
A0
A1
A2
VDD
P0 P1 P2 P3 P4 P5 P6 P7
PCF8574T/TR
CONTROL
Atmega328p
C1 100nF
C2 10uF
H1
2.54-1x6P直针
GND 5V SLAVE D11 D12 D13
ISP - Program
UPLOAD
U1
PD0(RXD/PCINT16)
PD1(TXD/PCINT17)
PD2(INT0/PCINT18)
(PCINT19/OC2B/INT1)PD3
(PCINT20/XCK/T0)PD4
(PCINT21/OC0B/T1)PD5
(PCINT22/OC0A/AIN0)PD6
(PCINT23/AIN1)PD7
ADC7
ADC6
AVCC
AREF
(PCINT6/XTAL1/TOSC1)PB6
(PCINT7/XTAL2/TOSC2)PB7
(PCINT0/CLKO/ICP1)PB0
(PCINT1/OC1A)PB1
(PCINT2/SS#/OC1B)PB2
(PCINT3/OC2A/MOSI)PB3
(PCINT4/MISO)PB4
PB5(SCK/PCINT5)
PC0(ADC0/PCINT8)
PC1(ADC1/PCINT9)
PC2(ADC2/PCINT10)
PC3(ADC3/PCINT11)
PC4(ADC4/SDA/PCINT12)
PC5(ADC5/SCL/PCINT13)
PC6(RESET#/PCINT14)
ATMEGA328P-AU
R6 1MΩ
X1 16MHz
C8 100nF
R5 10kΩ
SW1
TS-1187A-B-A-B
SLAVE
REAL TIME CLOCK
12VDC TO 5VDC
U4
SDA
SCL
S/OUT
VBAT
VCC
GND
X1
X2
DS1307ZN+T&R
C9 10uF
C10 20pF
C14 20pF
32.768kHz
R7 200Ω
R8 4.7kΩ
R9 4.7kΩ
R10 4.7kΩ
D3 1N5819WS
R12 510kΩ
R13 1MΩ
C15 10uF
B1 BS-2-1
POWER SUPPLY
12VDC TO 5VDC
12V
D1 SK86C
12V1
D2 SS210
P1 WJ128V-5.0-2P
F1
TP1
TP2
C11 470uF
C12 1uF
U3
XL1509-5.0E1
VIN
ON/OFF
FB
OUT
GND
L1 68uH
D4 SS210
C13 220uF
R11 1kΩ
LED1
EXTERNAL CONN
12V1
GND D7 D6 D5
CN1
SEMAFORO
GND D16 D14 D15
CN2
MATRIX
GND D12 D10 D11
CN3
MARCADORES
Schematic
Control Board
Update Date 2024-11-11
Create Date 2024-08-02
Drawed
Ing Carlos Fuentes
Security-panel
ELECTRALL
VER V0.1
SIZE A4
Part N ELEC-0000
PAGE 1 OF 1
Name :