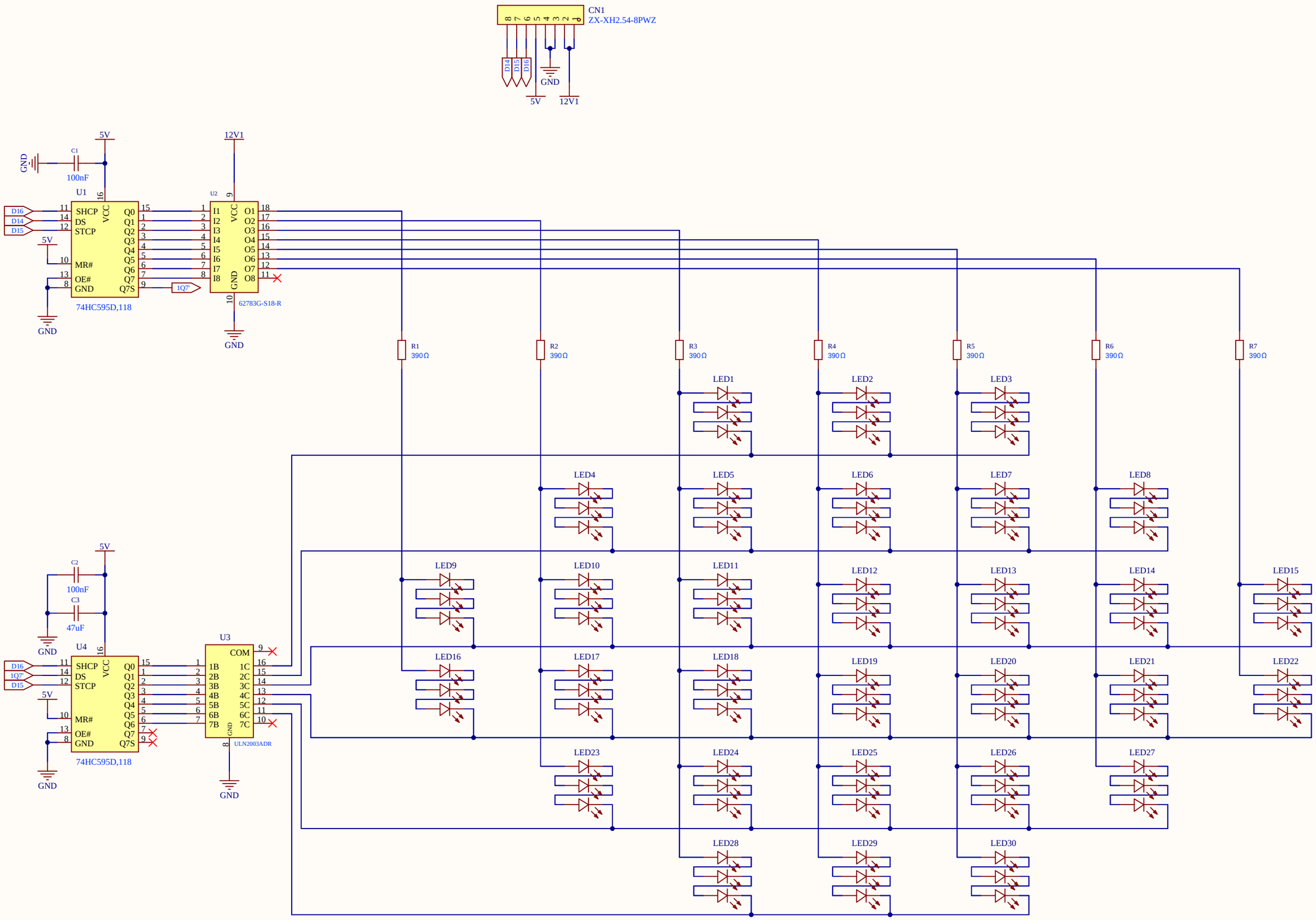

Schematic	matrix days	Update Date	2024-08-12
		Create Date	2024-08-02
Drawed	Ing Carlos Fuentes	Security-panel	
		VER	V0.1
		SIZE	A4
		Part N	ELEC-0000
		PAGE	1 OF 1

Name :