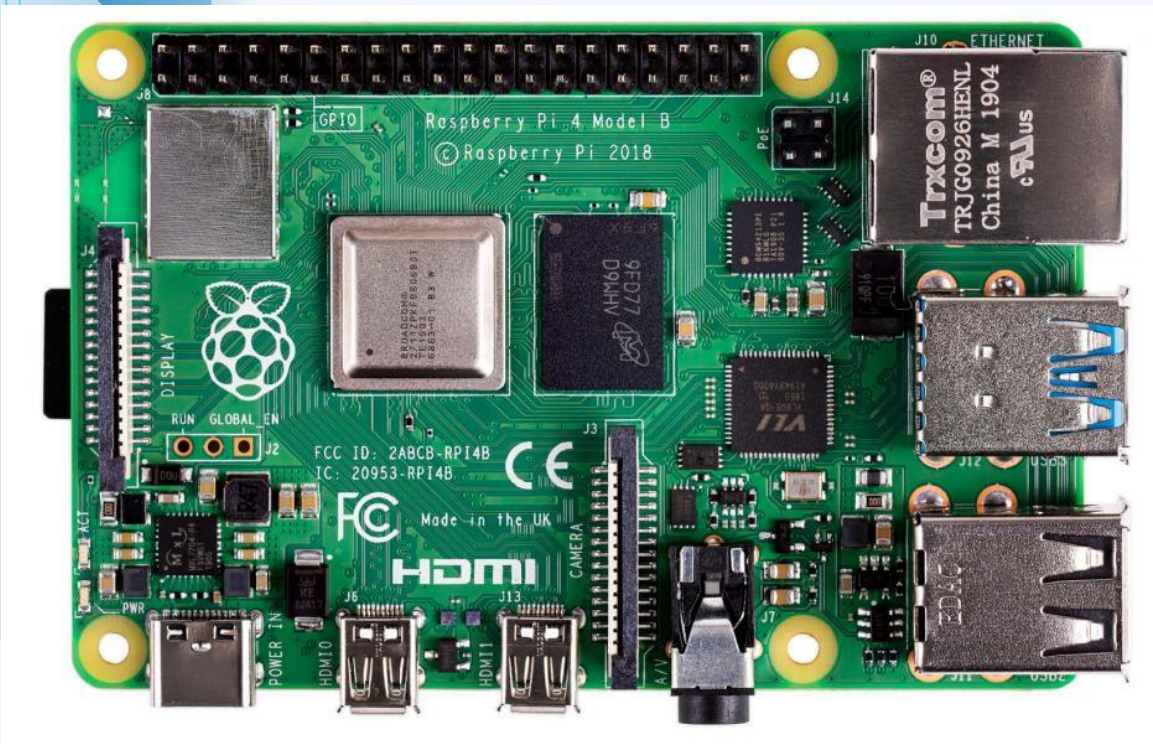

Raspberry Pi 4 Model B (4GB)

GPIO Technical Reference Guide

1. General Overview

The Raspberry Pi 4 Model B includes a 40-pin GPIO (General Purpose Input/Output) header used for hardware interfacing and electronic projects.

- Total Header Pins: 40
- Usable Digital GPIO Pins: 26
- Built-in Analog Inputs: None
- Logic Level: 3.3V

WARNING: GPIO pins are NOT 5V tolerant.

2. Power Pins

Pin Type	Physical Pins	Voltage

5V	2, 4	5 Volts
3.3V	1, 17	3.3 Volts
Ground	6, 9, 14, 20, 25, 30, 34, 39	0V

Total Ground Pins: 8

Total Power Pins: 4

3. Digital GPIO Pins

All GPIO pins are digital only (HIGH or LOW), operate at 3.3V logic, and can be configured as input or output.

Safe Voltage Range: 0 – 3.3V

Absolute Maximum Voltage: ~3.6V

Applying 5V directly will permanently damage the board.

Maximum Current per Pin: 16 mA

Total GPIO Current Limit: 50 mA

4. PWM (Pulse Width Modulation)

Hardware PWM Channels: 2

Common PWM-capable pins:

- GPIO12 (Pin 32)
- GPIO13 (Pin 33)
- GPIO18 (Pin 12)
- GPIO19 (Pin 35)

Used for LED brightness control, motor speed control, servo motors, and buzzers.

5. Communication Interfaces

Interface	GPIO Pins	Purpose
I2C	GPIO2 (SDA), GPIO3 (SCL)	Sensors, ADCs
SPI	GPIO10, 9, 11, 8, 7	ADCs, Displays
UART	GPIO14 (TX), GPIO15 (RX)	Serial Communication

6. Analog Input

The Raspberry Pi has no built-in analog input.

To read analog sensors, use an external ADC such as:

- MCP3008 (10-bit, SPI, 8 channels)
- ADS1115 (16-bit, I2C, 4 channels)

7. Safety Guidelines

- Always use 3.3V logic levels
- Never connect 5V directly to GPIO
- Use level shifters for 5V devices
- Use resistors with LEDs
- Use transistors or motor drivers for motors

Raspberry Pi 4 B J8 GPIO Header

Pin#	NAME	NAME	Pin#
01	3.3v DC Power	DC Power 5v	02
03	GPIO02 (SDA1, I²C)	DC Power 5v	04
05	GPIO03 (SCL1, I²C)	Ground	06
07	GPIO04 (GPCLK0)	(TXD0, UART) GPIO14	08
09	Ground	(RXD0, UART) GPIO15	10
11	GPIO17	(PWM0) GPIO18	12
13	GPIO27	Ground	14
15	GPIO22	GPIO23	16
17	3.3v DC Power	GPIO24	18
19	GPIO10 (SPI0_MOSI)	Ground	20
21	GPIO09 (SPI0_MISO)	GPIO25	22
23	GPIO11 (SPI0_CLK)	(SPI0_CE0_N) GPIO08	24
25	Ground	(SPI0_CE1_N) GPIO07	26
27	GPIO00 (SDA0, I²C)	(SCL0, I²C) GPIO01	28
29	GPIO05	Ground	30
31	GPIO06	(PWM0) GPIO12	32
33	GPIO13 (PWM1)	Ground	34
35	GPIO19	GPIO16	36
37	GPIO26	GPIO20	38
39	Ground	GPIO21	40

Raspberry Pi 4 B J14 PoE Header

01	TR01	TR00	02
03	TR03	TR02	04

Pinout Grouping Legend

Inter-Integrated Circuit Serial Bus

Serial Peripheral Interface Bus

Ungrouped/Un-Allocated GPIO

Universal Asynchronous Receiver-Transmitter

Reserved for EEPROM

Rev. 2
19/06/2019 CGS

www.element14.com/RaspberryPi

Raspberry Pi2 GPIO Header

	Pin#	NAME	NAME	Pin#
	01	3.3v DC Power	DC Power 5v	02
	03	GPIO02 (SDA1 , I²C)	DC Power 5v	04
	05	GPIO03 (SCL1 , I²C)	Ground	06
	07	GPIO04 (GPIO_GCLK)	(TXD0) GPIO14	08
	09	Ground	(RXD0) GPIO15	10
	11	GPIO17 (GPIO_GEN0)	(GPIO_GEN1) GPIO18	12
	13	GPIO27 (GPIO_GEN2)	Ground	14
	15	GPIO22 (GPIO_GEN3)	(GPIO_GEN4) GPIO23	16
	17	3.3v DC Power	(GPIO_GEN5) GPIO24	18
Early Models	19	GPIO10 (SPI_MOSI)	Ground	20
	21	GPIO09 (SPI_MISO)	(GPIO_GEN6) GPIO25	22
	23	GPIO11 (SPI_CLK)	(SPI_CE0_N) GPIO08	24
	25	Ground	(SPI_CE1_N) GPIO07	26
	27	ID_SD (I²C ID EEPROM)	(I²C ID EEPROM) ID_SC	28
	29	GPIO05	Ground	30
	31	GPIO06	GPIO12	32
	33	GPIO13	Ground	34
Late Models	35	GPIO19	GPIO16	36
	37	GPIO26	GPIO20	38
	39	Ground	GPIO21	40

Rev. 1
26/01/2014

http://www.element14.com

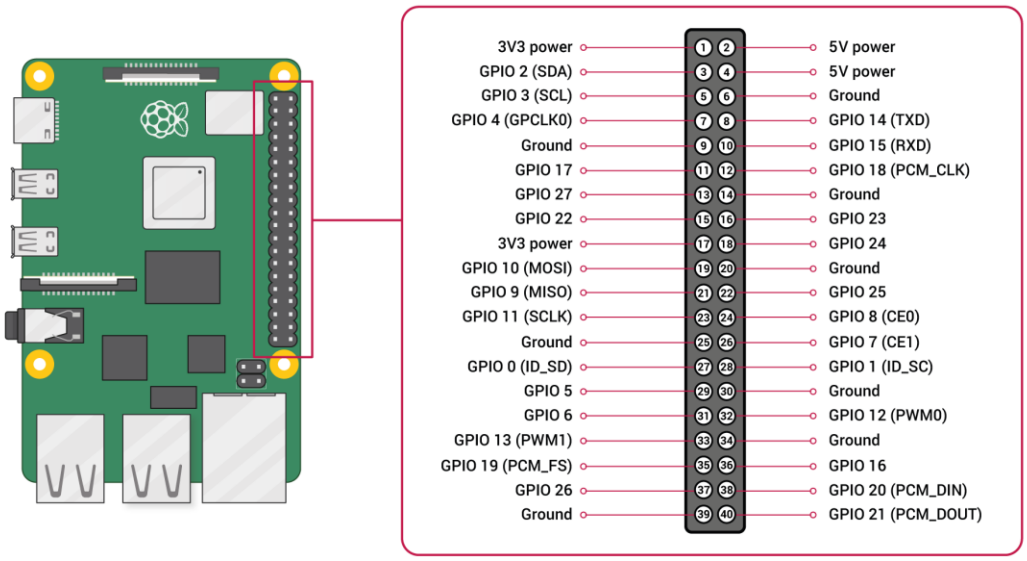
3V3 power 1 2 5V power
GPIO 2 (SDA) 3 4 5V power
GPIO 3 (SCL) 5 6 Ground
GPIO 4 (GPCLK0) 7 8 GPIO 14 (TXD)
Ground 9 10 GPIO 15 (RXD)
GPIO 17 11 12 GPIO 18 (PCM_CLK)
GPIO 27 13 14 Ground
GPIO 22 15 16 GPIO 23
3V3 power 17 18 GPIO 24
GPIO 10 (MOSI) 19 20 Ground
GPIO 9 (MISO) 21 22 GPIO 25
GPIO 11 (SCLK) 23 24 GPIO 8 (CE0)
Ground 25 26 GPIO 7 (CE1)
GPIO 0 (ID_SD) 27 28 GPIO 1 (ID_SC)
GPIO 5 29 30 Ground
GPIO 6 31 32 GPIO 12 (PWM0)
GPIO 13 (PWM1) 33 34 Ground
GPIO 19 (PCM_FS) 35 36 GPIO 16
GPIO 26 37 38 GPIO 20 (PCM_DIN)
Ground 39 40 GPIO 21 (PCM_DOUT)

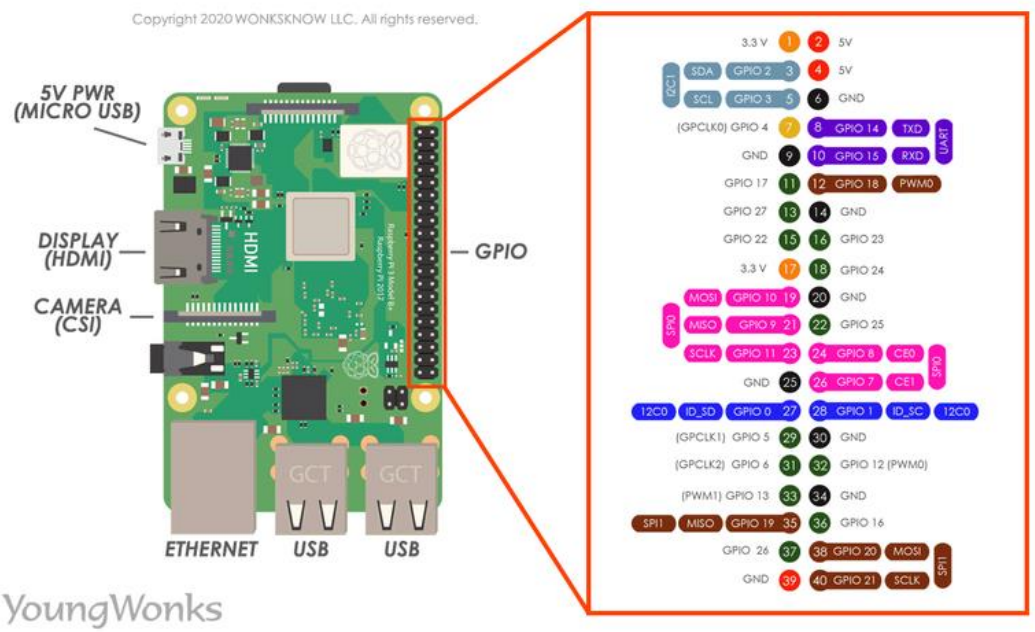
Copyright 2020 WONKSKNOW LLC. All rights reserved.
5V PWR (MICRO USB)
DISPLAY (HDMI)
CAMERA (CSI)
GPIO
ETHERNET
USB
USB
HDMI
GCT
GCT
3.3 V 1 2 5V
SDA GPIO 2 3 4 5V
SCL GPIO 3 5 6 GND
(GPCLK0) GPIO 4 7 8 GPIO 14 TXD
GND 9 10 GPIO 15 RXD
GPIO 17 11 12 GPIO 18 PWM0
GPIO 27 13 14 GND
GPIO 22 15 16 GPIO 23
3.3 V 17 18 GPIO 24
MOSI GPIO 10 19 20 GND
MISO GPIO 9 21 22 GPIO 25
SCLK GPIO 11 23 24 GPIO 8 CE0
GND 25 26 GPIO 7 CE1
I2C0 ID_SD GPIO 0 27 28 GPIO 1 ID_SC I2C0
(GPCLK1) GPIO 5 29 30 GND
(GPCLK2) GPIO 6 31 32 GPIO 12 (PWM0)
(PWM1) GPIO 13 33 34 GND
SPI1 MISO GPIO 19 35 36 GPIO 16
GPIO 26 37 38 GPIO 20 MOSI
GND 39 40 GPIO 21 SCLK
GCT
SPI0
UART
SPI0
SPI1
YoungWonks