Automated MES classification for UC

UGP Presentation

April 2026

Problem Statement

Ulcerative Colitis (UC) is a chronic inflammatory disease of the colon, whose severity is clinically assessed using the Mayo Endoscopic Score (MES), ranging from 0 to 3.
Manual evaluation of colonoscopy videos is:

- Highly subjective
- Time-consuming
- Prone to inter-observer variability

This creates a strong need for automated, objective, and scalable severity assessment systems.

Challenges in Automation

- **Inter-class similarity:** Adjacent MES classes differ subtly (e.g., mild vs moderate inflammation)
- **Intra-class variability:** Same severity appears differently across patients and conditions
- **Data limitations:** Lack of fine-grained annotations
- **Visual complexity:** Lighting, occlusion, motion blur

These challenges motivate the use of advanced deep learning and graph-based models.

UC-SCALE: Methodology

UC-SCALE is an end-to-end deep learning pipeline operating on raw colonoscopy videos.

- Frame extraction and preprocessing
- Quality Control model removes noisy frames
- Temporal sampling selects representative frames
- Attention-based Multiple Instance Learning (MIL)
- Spatial localisation via camera tracking
- Aggregated Disease Severity Score (ADSS)

UC-SCALE: Architecture

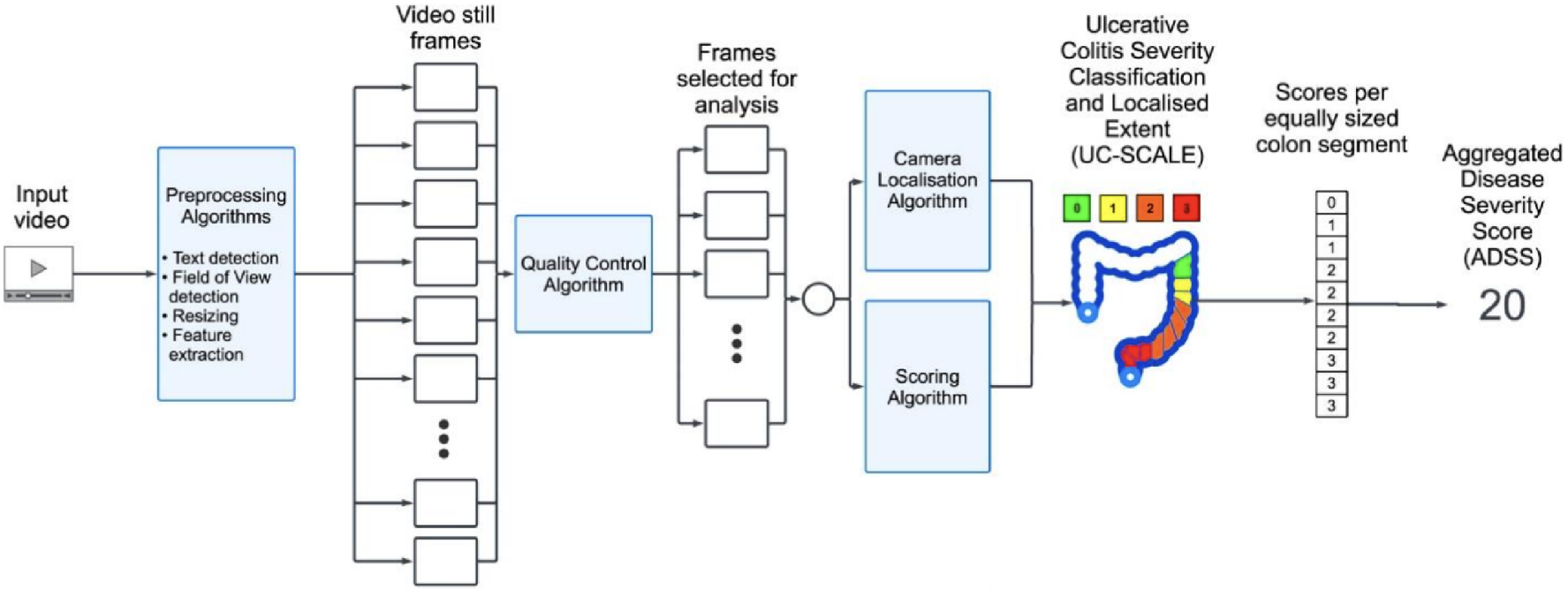

UC-SCALE: Pros and Cons

Pros

- No need for frame-level annotations
- Captures both severity and spatial extent
- Is a good measure of treatment effect

Cons

- Limited interpretability (black-box attention)
- Difficulty distinguishing intermediate classes(MCES 1 vs 2)
- Limited real-world generalisation

Ranking-CNN: Methodology

- Uses pairwise comparisons instead of labels
- Learns ordinal ranking of severity
- Produces continuous scale (UCEGS: 0–10)
- Trained on large multi-center dataset

This mimics expert comparative reasoning rather than rigid classification.

Ranking-CNN: Architecture

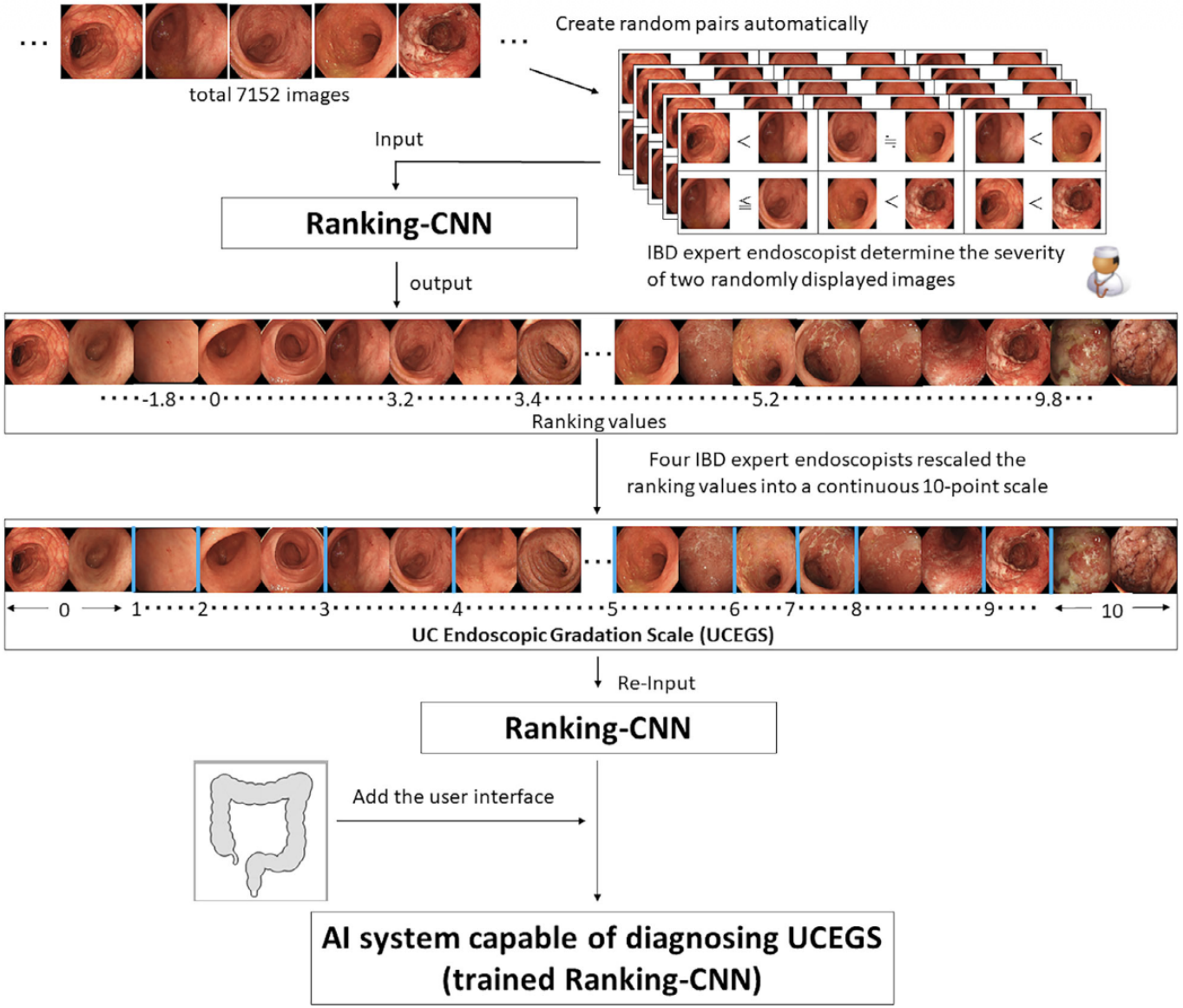

Ranking-CNN: Pros and Cons

Pros

- Continuous scaled severity modeling
- Closer to human reasoning
- Easier annotation

Cons

- Presence of selection bias
- Annotation complexity (pairwise labels)
- Inconsistency in severe classes
- Unable to detect location in the colon

Weakly Supervised GCNN: Method

- VGG-19 extracts frame features
- PELT algorithm segments videos
- Graph construction using cosine similarity
- GraphSAGE + LSTM aggregation
- Attention pooling + classification

Weakly Supervised GCNN: Architecture

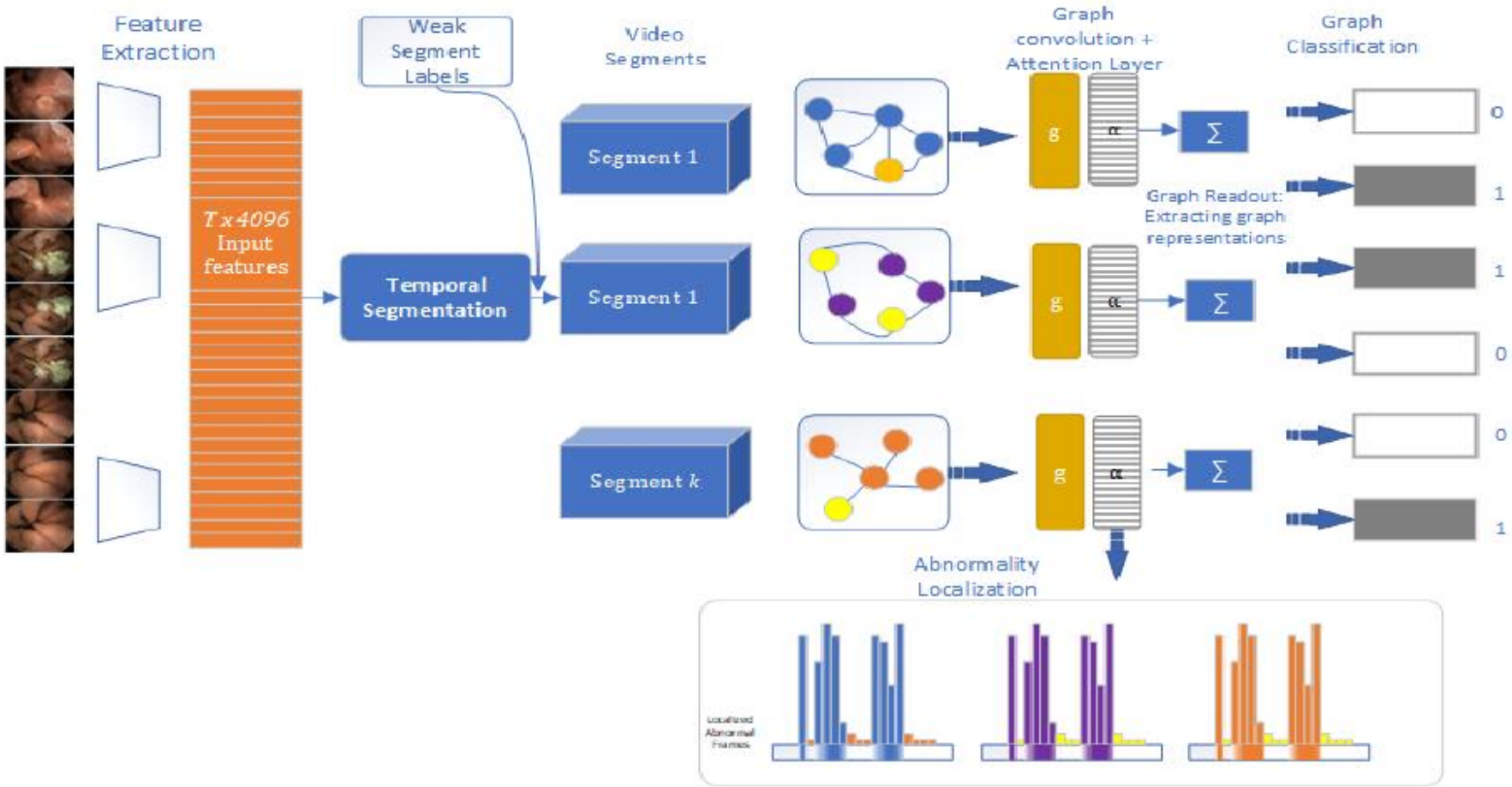

Weakly Supervised GCNN: Pros and Cons

Pros

- No frame-level annotation required
- Disease-agnostic

Cons

- Sensitive to segmentation quality
- Struggles with isolated anomalies
- Affected by noise and motion artifacts

Microscopic Image Classification: Method

- **Addressing Intra-class Variance:** Automatically partitions classes with high visual variance into optimal sub-classes using visual feature clustering.
- **Fine-grained Feature Learning:** Treating generated clusters as independent classes during training forces the network to learn more discriminative, fine-grained features.
- **Handling Inter-class Similarity:** Utilizes Triplet Loss to enforce greater distance between feature embeddings of different classes.
- **Automated Optimization:** The algorithm dynamically determines which classes require clustering and the optimal number of clusters for each.

Microscopic Image Classification: Algorithm

Algorithm 1: Training with clustering

```
Input: Training and validation data, max-clusters, confusion-threshold.
       Initialise number of clusters for each class with 1 and flag for each class
       with 0.
Output: Trained model
while Not Converged do
    Train the encoder network;
    Perform validation and get the normalised confusion matrix;
    Extract features of the images in the training data;
    for each class do
        if false negative > confusion-threshold and flag=0 then
            Increase num-allowed-clusters. If the number of clusters reach the
             max-allowed-clusters set the flag to 1.
        else if false negative > confusion-threshold and flag=1 then
            Decrease num-allowed-clusters. If the number of clusters reach 1
             then set the flag to 0.
        Generate the clusters and pseudo-labels using X-Means.
```

Microscopic Image Classification: Pros and Cons

Pros

- Effectively reduces misclassification caused by high intra-class variance.
- Improves performance on fine-grained visual classification tasks.
- Automated selection of cluster counts removes the need for manual hyperparameter tuning per class.

Cons

- Performance is heavily dependent on the quality of learned visual features for clustering.
- Requires a robust initial feature encoder (e.g., pre-trained deep networks).
- Increased computational overhead during training due to iterative clustering and loss calculations.

DB-HDFFN: Methodology

This architecture addresses noise and subtle feature extraction in medical imaging via dual-branch design.

- **Global Branch:** Dynamic Sparse Attention (DSA)
  - Selects top-k informative regions
  - Reduces noise from irrelevant areas
- **Local Branch:** Variance-aware feature extraction (ICV Block)
  - Exploits intra/inter image variance
  - Highlights subtle lesion patterns
- **Fusion:** Dynamic Fusion Block (DF)
  - Combines global + local features via attention

DB-HDFFN: Architecture

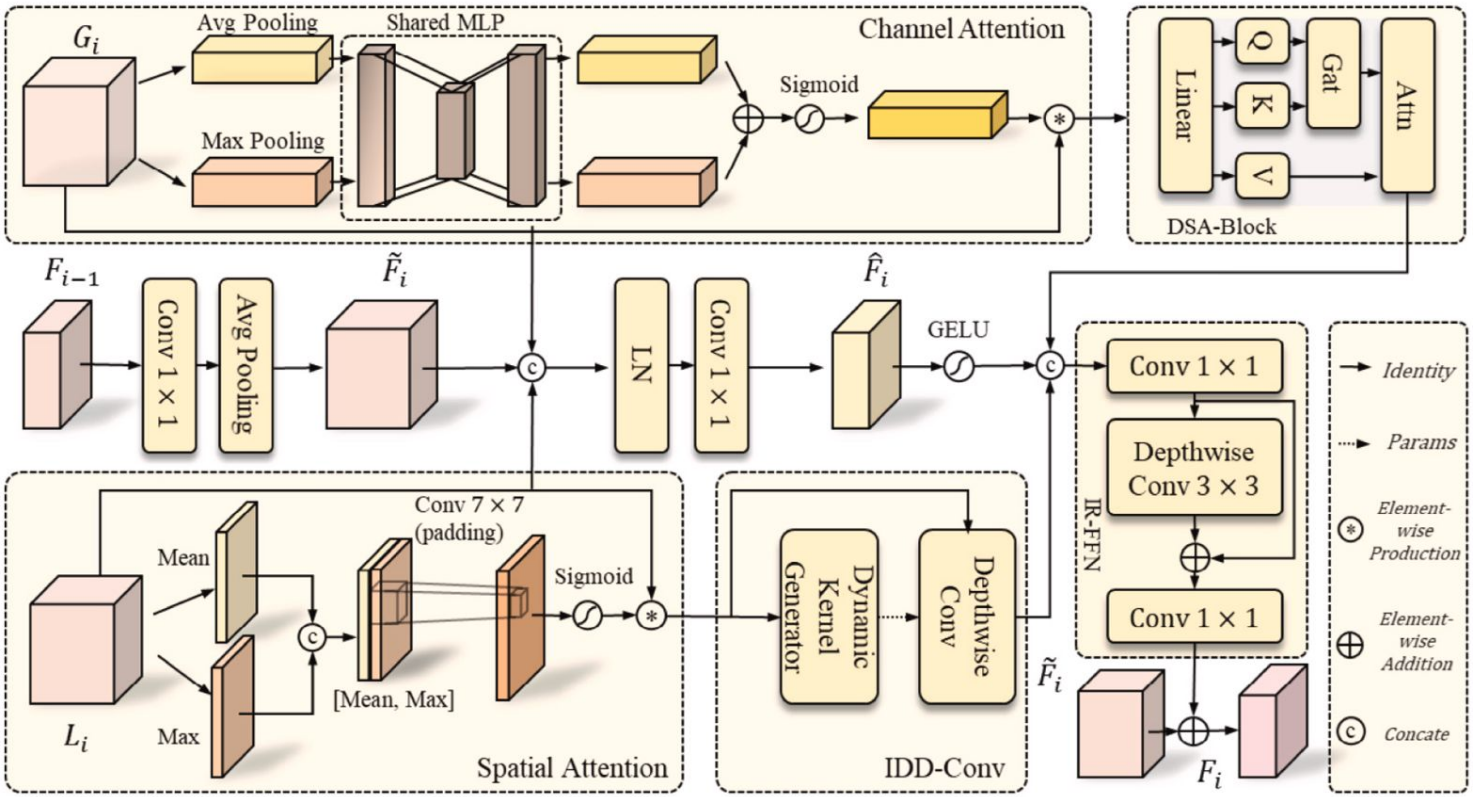

DB-HDFFN: Pros and Cons

Pros

- Robust to noise via sparse attention
- Effectively captures subtle lesion variations

Cons

- Computational overhead due to dynamic convolution
- Requires fully supervised training data

Topology-based Framework: Methodology

This approach integrates topological features into deep learning models.

- Compute persistence diagrams (PDs) at multiple scales
- Use intensity and gradient filtrations
- Vineyard algorithm tracks cross-scale features
- Stability filtering removes noise
- PD encoder:
  - Spatial Transformer Network (STN)
  - Multi-head cross-attention
- Integrated bipartite matching

Topology-based Framework: Architecture

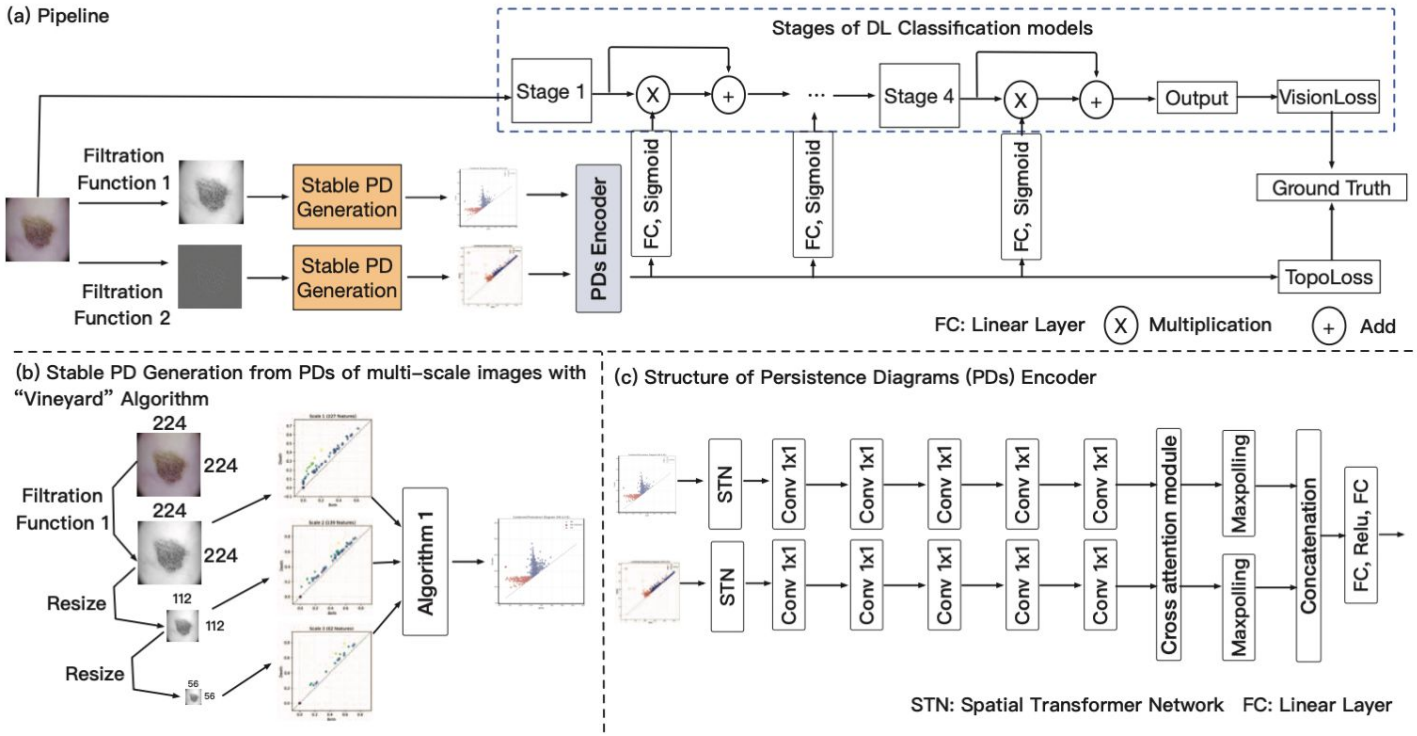

Topology-based Framework: Pros and Cons

Pros

- Captures higher-order structural information
- Improves feature robustness via stability filtering

Cons

- Very high parameter overhead
- Sensitive to multiple hyperparameters

Implemented Approach Overview

We implemented a hybrid pipeline combining CNN feature extraction with Graph Neural Networks.

- Converts images into graph representations
- Captures global visual patterns (CNN)
- Models spatial relationships (GCN)

Feature Extraction (ResNet50)

- Input images resized to 224×224
- Pre-trained ResNet50 used as backbone
- Final layer removed, it acts as a feature extractor
- Outputs high-dimensional embeddings capturing:
  - Texture
  - Vascular patterns
  - Inflammation severity

Graph Construction: Patch-Based

- Image divided into 7×7 grid (49 nodes)
- Each patch forms a node in the graph
- Features of each node:
  - Mean pixel
  - ResNet based embeddings
- Edges: 4-neighbour connectivity (horizontal and vertical neighbours)

Efficient and preserves spatial locality.

Graph Construction: Superpixel

- Uses Simple Linear Iterative Clustering(SLIC) Algorithm
- Nodes represent semantic regions
- Edges based on adjacency between regions
- Better alignment with anatomical structures

Trade-off: higher computational cost.

Graph Convolutional Network

- 3-layer GCN:
  - $64 \rightarrow 128 \rightarrow 256$ channels
- ReLU activations after each layer
- Global mean pooling to aggregate node-level features into a graph-level representation
- Fully connected classification layer (4 classes)

Captures both local and global spatial relationships.

Metrics & Results

Training

- Loss: Cross-Entropy — Optimizer: Adam
- Metrics: Accuracy, Macro F1-score, QWK

Patch GCN

- Accuracy: 0.5771
- F1: 0.3043
- QWK: 0.2902

Superpixel GCN

- Accuracy: 0.5990
- F1: 0.3111
- QWK: 0.2518

Discussion

- Low Macro F1 (~ 0.30) indicates poor class-wise discrimination, especially for intermediate severity levels (MES 1 vs MES 2)
- Use of pre-trained ResNet50 without fine-tuning limits task-specific feature learning
- Simple GCN + global pooling likely causes over-smoothing of local features
- Trade-off: Superpixels give slight accuracy gains but at higher computational cost
- Overall: Better feature representation and more expressive models are needed

Proposed Architecture Overview

Dual-Branch Temporal Graph Attention + Multi-Scale CNN

- Global branch: Graph Attention Network (GAT)
- Local branch: Multi-scale CNN
- Fusion via Dynamic Fusion Block

Global Branch: GAT

- Nodes = video frames
- Edges via cosine similarity
- Captures temporal relationships
- Handles non-consecutive frame similarity

$$h_i^{(l+1)} = \sigma\left(\sum_j \alpha_{ij} W h_j^{(l)}\right)$$

Local Branch: Multi-Scale CNN

- Uses filters: 1×1, 3×3, 5×5
- Captures fine-grained lesion features
- Detects:
  - Micro-ulcers
  - Bleeding
  - Vascular loss

Dynamic Fusion Block

- Combines global (GAT) + local (CNN)
- Adaptive weighting
- Balances:
  - Local lesion severity
  - Global disease extent

Proposed Architecture

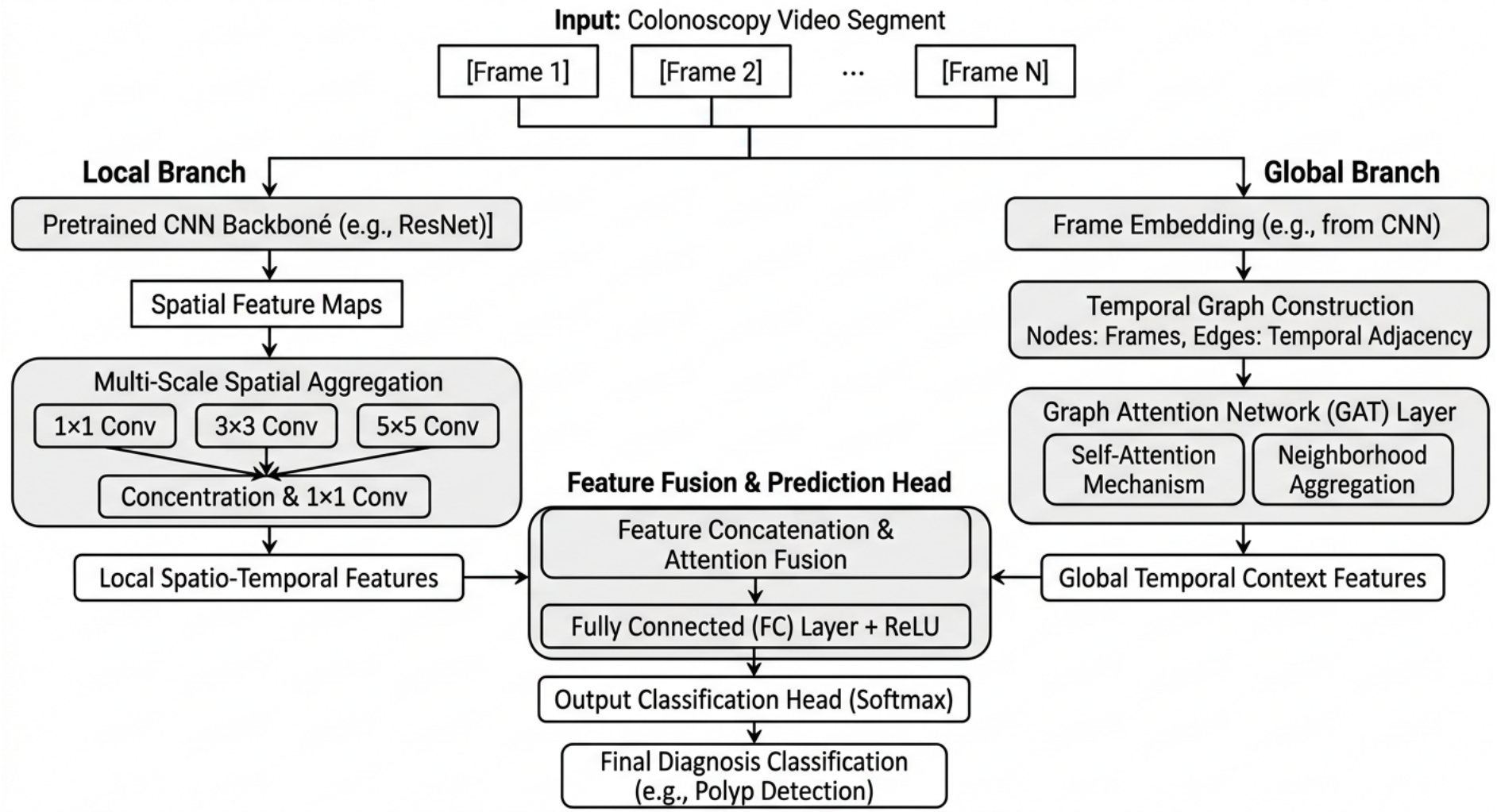

Proposed Method: Pros and Cons

Pros

- Handles temporal discontinuity
- Combines local + global features
- Robust to noise

Cons

- High computational cost
- Depends on feature quality
- High memory usage

Conclusion

- Developed hybrid CNN + GCN pipeline
- Captured spatial structure explicitly
- Achieved meaningful performance improvements
- Proposed advanced dual-branch architecture for future work

Thank You

References

- Becker et al., "UC-SCALE: AI-based severity classification and localisation," *J. Crohn's Colitis*, 2024.
- Becker et al., "Deep learning model for endoscopic severity grading," *Ther. Adv. Gastrointest. Endosc.*, 2021.
- Takabayashi et al., "Ranking-CNN for UC severity gradation," *Digestive Endoscopy*, 2024.
- Takenaka et al., "Deep neural network for UC evaluation (DNUC)," *Gastroenterology*, 2020.
- Stidham et al., "Computer vision for endoscopic disease quantification," *Gastroenterology*, 2024.
- Wen et al., "DB-HDFFN: Dual-branch hierarchical dynamic feature fusion network," *Biomed. Signal Process. Control*, 2026.
- Aadiwal et al., "Ensemble deep learning for GI lesion detection," *Bioengineering*, 2025.