Automated Assignment of Mayo Endoscopic Scores (MES) to Endoscopic Videos for Ulcerative Colitis Detection

Nikhilesh Joshi (230700), Rohit Vijaykumar Somani (230871), Yatharth Dangi (231197)
Indian Institute of Technology Kanpur (IITK)

***Abstract*—Ulcerative Colitis (UC) is a chronic inflammatory bowel disease whose severity is clinically evaluated using the Mayo Endoscopic Score (MES). Manual assessment of endoscopic videos is highly subjective, time-consuming, and prone to inter-observer variability due to subtle inter-class similarities and high intra-class variability among different severity levels. To address these challenges, this project proposes the Dual-Branch Temporal Graph Attention and Multi-Scale CNN Network (DB-GAT-CNN), a novel architecture that mimics expert clinical reasoning by simultaneously evaluating localized mucosal details and global disease extent directly from colonoscopy video segments. The local branch employs a multi-scale CNN to extract fine-grained, high-variance clinical markers, such as micro-ulcers and vascular pattern loss, at the frame level. Concurrently, the global branch constructs a temporal graph—connecting video frames based on feature cosine similarity—and utilizes a Graph Attention Network (GAT) to model the broader spatial-temporal context of the inflammation, effectively overcoming erratic camera movements and temporal discontinuities. Finally, a Dynamic Fusion Block adaptively modulates and integrates the multi-scale local features with the global GAT context.**

***Index Terms*—Ulcerative Colitis, Mayo Endoscopic Score, Graph Attention Network, Multi-Scale CNN, Colonoscopy, Deep Learning**

I. Introduction

A. Background and Motivation

Ulcerative Colitis (UC) is characterized by chronic inflammation of the colonic mucosa. The clinical gold standard for assessing disease activity and evaluating therapeutic efficacy is endoscopy, quantified by the Mayo Endoscopic Score (MES), which grades severity on a discrete scale from 0 (normal or inactive disease) to 3 (severe disease). However, the manual grading of long, unedited endoscopic videos is inherently labor-intensive and highly subjective. A significant clinical bottleneck in gastroenterology is inter-observer variability; experts frequently disagree on the exact severity score due to the complex and dynamic visual nature of the mucosa.

From a computational perspective, the difficulty of automating MES classification stems from two primary visual challenges:

- **Inter-class Similarity:** The visual boundaries between adjacent MES grades (e.g., a mild MES 1 versus a moderate MES 2) are separated by highly subtle features, such as the exact degree of vascular pattern loss, mild friability, or minimal erosions.
- **Intra-class Variability:** A single MES category can manifest in vastly different ways depending on the patient, lighting conditions, and the specific segment of the colon being viewed.

To overcome the prohibitive cost of frame-level annotations and the limitations of human subjectivity, there is a critical need for automated systems that can analyze long endoscopic videos, extract meaningful pathological features, and provide objective, reproducible severity scores.

II. Literature Review: Existing Approaches

Recent advancements in computer vision have proposed various methodologies to automate endoscopic severity grading. Reviewing the state-of-the-art reveals a diverse spectrum of approaches, each addressing different facets of the classification challenge.

A. End-to-End CNN for Raw Video Assessment (UC-SCALE by Becker et al.)

1) Methodology: UC-SCALE is a fully automated deep learning pipeline designed to assess Ulcerative Colitis severity directly from raw colonoscopy videos using weak supervision. The system operates on entire videos and relies on colon-section-level Mayo Clinic Endoscopic Subscores (MCES) instead of frame-level annotations. The pipeline begins with preprocessing, where frames are extracted, resized, and standardized, and relevant metadata such as colon section is identified. A Quality Control (QC) model then filters out non-informative or low-quality frames (e.g., motion blur, occlusions), ensuring only diagnostically useful frames are retained.

From these, a temporal sampling strategy selects representative frames across the video. These frames are passed to a severity scoring model based on attention-driven multiple instance learning, which aggregates frame-level features to predict MCES scores despite weak labels. In parallel, a camera localisation module estimates the relative position of each frame within the colon using self-supervised motion learning, enabling spatial mapping of disease severity. Finally, predictions are generated at multiple levels (frame, segment, and full video), and an Aggregated Disease Severity Score (ADSS) is computed by combining severity across spatial segments to capture both disease intensity and extent. The model is trained on a large multicenter dataset of over 4,000 clinical trial videos, improving robustness and generalisation.

2) Pros:

- **No need for frame-level annotations:** Learns effectively from weak labels, reducing reliance on expensive expert annotations.
- **Captures both severity and extent:** Spatial localisation enables a more comprehensive assessment than traditional MCES.
- **Strong clinical reliability:** Achieves agreement comparable to expert readers and correlates well with clinical biomarkers.

3) Cons:

- **Limited interpretability:** Attention-based aggregation leads to a black-box model with unclear frame-level contributions.
- **Challenges with intermediate classes:** Lower performance in distinguishing mild vs moderate disease (MCES 1 vs 2).
- **Generalisation concerns:** Trained primarily on clinical trial data, requiring further validation on real-world datasets.

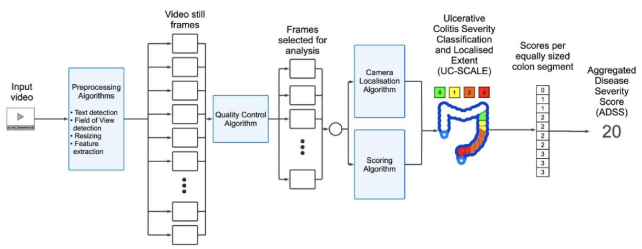

Fig. 1: Overview of the UC-SCALE pipeline for automated ulcerative colitis severity assessment from raw colonoscopy videos.

B. Ranking-CNN for Continuous Grading (Takabayashi et al.)

1) Methodology: This approach introduces a Ranking-CNN framework to model ulcerative colitis severity as a continuous variable rather than discrete categories. Instead of training on predefined labels such as Mayo scores, the model is trained using pairwise comparisons of endoscopic images annotated by expert endoscopists. Specifically, experts are presented with pairs of images and asked to determine which image shows greater inflammation severity (or if they are similar). Using these relative comparisons, the Ranking-CNN learns an ordinal representation of disease severity.

After training, the learned ranking values are rescaled into a continuous 0–10 metric termed the Ulcerative Colitis Endoscopic Gradation Scale (UCEGS). This scale reflects fine-grained differences in inflammation and aims to replicate expert-level holistic assessment rather than rigid criteria-based scoring. The model is trained on a large dataset of nearly 50,000 endoscopic images collected from multiple centers, improving robustness. Additionally, a user interface maps predicted severity scores spatially across the colon, enabling visualization of both severity and distribution of disease. The system is validated by comparing its outputs with expert assessments and traditional scoring systems, showing strong correlation and consistency.

2) Pros:

- **Continuous severity modeling:** Captures subtle differences in inflammation beyond coarse categorical scores.
- **Closer to expert reasoning:** Learns from comparative judgments, incorporating holistic clinical intuition.
- **High agreement with experts:** Demonstrates strong correlation with expert assessments and existing scoring systems.

3) Cons:

- **Annotation complexity:** Requires large-scale pairwise comparisons, which can be time-consuming to generate.
- **Inconsistency in high severity:** Overlap observed in severe classes (e.g., MES 2–3), reducing reliability in extreme cases.
- **Limited validation:** Lacks extensive external validation and real-world deployment testing.

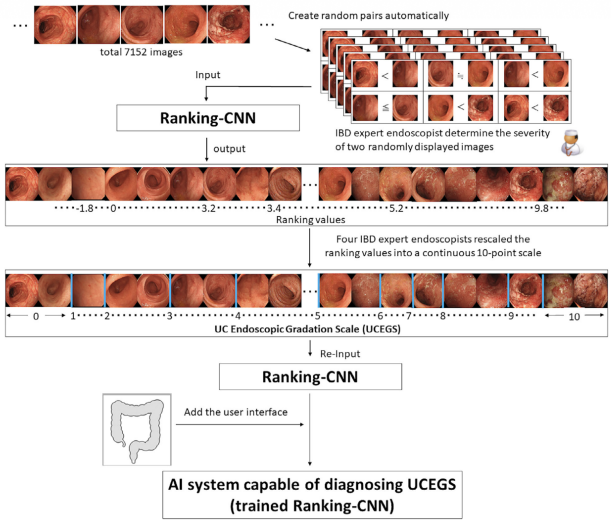

Fig. 2: Workflow of the Ranking-CNN approach for continuous grading of ulcerative colitis severity.

C. Graph Convolution Neural Network For Weakly Supervised Abnormality Localization

1) Methodology: The proposed framework utilizes a multi-step approach for temporal abnormality localization in long Wireless Capsule Endoscopy (WCE) videos using weak video-level labels. First, a pre-trained VGG-19 network extracts 4096-dimensional feature vectors from each video frame. Next, unsupervised temporal segmentation using the PELT algorithm partitions the long video into uniform, homogeneous short segments. Each segment is modeled as a complete graph where frames act as nodes and cosine similarity between features defines the edge weights. A two-layer Graph Convolutional Neural Network (GCNN) based on the GraphSage architecture is then applied, utilizing LSTM aggregation to update node features through neighborhood message passing.

Following this, an attention layer assigns weights to frames based on their importance, and the graph is aggregated into a single representation. A fully connected multi-instance classifier then predicts whether the segment contains an abnormality. During inference, the final classifier is replaced by a temporal pooling layer to generate a class activation map, effectively localizing the highest energy frames containing the abnormalities within the segment.

2) Pros:

- Eliminates the need for tedious and expensive frame-level expert annotations by utilizing only weak video-level labels for training.
- Employs a disease-agnostic binary classification framework, allowing the model to easily generalize to unseen or new categories of abnormalities.
- Effectively handles the unique non-contiguous nature of abnormal regions in WCE videos by using temporal pooling to select sparse representative frames.

3) Cons:

- The model may struggle to accurately identify an abnormality if there is only a single abnormal frame embedded within a very long temporal segment.
- Performance varies across different patients due to challenging environmental factors like occlusion, poor illumination, or unstable camera movement.
- Relies heavily on the accuracy of the initial unsupervised temporal segmentation to ensure that segments contain at most one abnormality without overlapping frames.

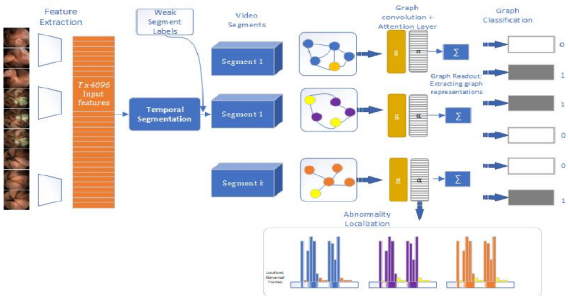

Fig. 3: Pipeline of the weakly supervised GCNN and Graph Attention Network for abnormality localization.

D. Graph Convolutional Network (GCN) for Cardiac Segmentation

1) Methodology: The methodology proposes a multi-structure Graph Convolutional Network (GCN) designed for robust cardiac ultrasound segmentation. Unlike standard pixel-wise segmentation models like U-Net, this approach predicts the contours of cardiac structures (left ventricle, myocardium, and left atrium) by modeling them as a graph of interconnected keypoints. The architecture consists of a pre-trained CNN encoder that extracts global visual features from the input ultrasound image. These features are transformed into a keypoint embedding space via a dense layer. Subsequently, a GCN decoder applies graph convolutions across the keypoints' spatial neighborhoods to output their precise 2D coordinates. To handle multiple cardiac structures simultaneously, the model organizes keypoints into an inner ring and an outer ring. Furthermore, the authors introduce a "displacement method" which defines the epicardium's position based on the normal distance relative to the endocardium, acting as a strong anatomical constraint. The study also proposes combining the GCN with a U-Net model in a parallel ensemble, utilizing the inter-model Dice agreement between their inherently different data representations to dynamically flag out-of-distribution cases, low-quality images, or anatomically incorrect segmentations in real time.

2) Pros:

- Eliminates anatomically incorrect segmentations by enforcing strong structural priors through its keypoint representation and the displacement method.
- Highly computationally efficient, requiring an order of magnitude fewer parameters and significantly less inference time than state-of-the-art pixel-wise architectures like nnU-Net.
- Enables robust real-time failure detection when ensembled with a U-Net, using inter-model agreement to effectively flag low-quality or out-of-distribution ultrasound images.

3) Cons:

- Yields a slightly lower pure segmentation accuracy (measured by Dice score and Hausdorff distance) compared to highly optimized pixel-wise methods like nnU-Net.
- Remains vulnerable to incorrect placement; while the generated shape is anatomically valid, the model can still fail to position the contours correctly within the image for out-of-distribution depth cases.
- Consistently underestimates clinical reference measurements, such as the Ejection Fraction (EF), exhibiting a negative bias similar to other deep learning methods.

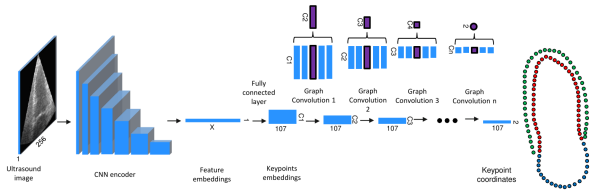

Fig. 4: Architecture of a GCN predicting structural contours and keypoints.

E. Dual-Branch Hierarchical Dynamic Feature Fusion Network (DB-HDFFN)

1) Methodology: The paper introduces the Dual-Branch Hierarchical Dynamic Feature Fusion Network (DB-HDFFN) to address challenges in medical image classification, such as distraction by irrelevant information and difficulty in extracting subtle lesion features. The architecture consists of three core

components. First, the Dynamic Sparse Global Branch utilizes a Dynamic Sparse Attention Block (DSA-Block) to capture global dependencies. Unlike standard full-attention Transformers that get distracted by noise, the DSA-Block applies a top-k dynamic sparsification strategy to focus exclusively on the most informative regions, thereby enhancing noise robustness and computational efficiency. Second, the Variance-aware Local Branch employs an Intra-Inter Variance Feature Extracting Block (ICV-Block) for refined local feature extraction. This block exploits the unique property of medical images—significant intra-image variance alongside slight inter-image variance—to adaptively emphasize subtle lesion areas while suppressing normal anatomical variations. Finally, the multi-scale features from these two parallel branches are integrated using a Dynamic Fusion Block (DF-Block). Rather than simple concatenation or summation, the DF-Block performs hierarchical cross-branch fusion through a combination of channel attention, spatial attention, and dynamic convolution. This ensures that the global contextual information and the fine-grained local lesion details are adaptively and effectively combined.

2) Pros:

- Achieves state-of-the-art classification performance and high robustness across diverse medical imaging modalities, even maintaining strong accuracy when trained on limited datasets.
- Effectively filters out irrelevant background noise and misleading annotations through dynamic sparse attention while precisely isolating subtle lesion variations using variance-aware local modeling.

3) Cons:

- The current framework is exclusively designed for 2D image modalities and requires structural redesigns to support 3D volumetric medical data.
- Despite the efficiency gains from sparse attention, the dynamic convolution components still introduce computational overhead that could limit deployment on low-resource devices.
- The approach relies entirely on fully supervised learning, meaning its effectiveness may diminish on datasets lacking extensive manual annotations.

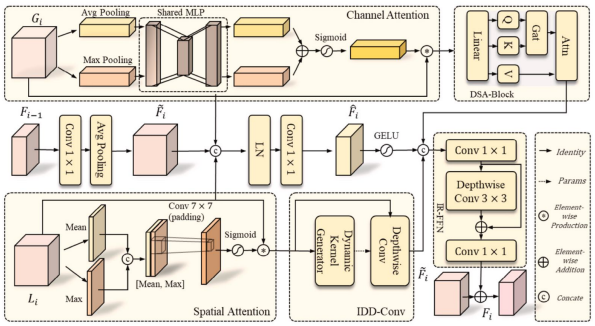

Fig. 5: Pipeline of the DB-HDFFN dual-branch hierarchical dynamic feature fusion network for medical image classification.

F. Integrating Multi-scale and Multi-filtration Topological Features

1) Methodology: The methodology introduces a topology-guided framework integrating multi-scale, multi-filtration features into deep learning backbones. Cubical persistence diagrams (PDs) are computed across three resolutions (224×224, 112×112, 56×56) using intensity and gradient magnitude filtrations. A "vineyard" tracking algorithm establishes cross-scale correspondences by computing pairwise Relative Persistence Distances and performing optimal bipartite matching via the Hungarian algorithm. A persistence-weighted stability score filters transient noise, yielding stable PDs.

These PDs are processed by an end-to-end PDs encoder. To ensure spatial invariance, the encoder first applies a PointNet-style Spatial Transformer Network (STN) consisting of three 1D convolutional layers (64, 128, 1024 channels), symmetric max-pooling, and a 3-layer MLP regression head (512, 256, 9). After further 1D convolutions, a multi-head cross-attention mechanism computes scaled dot-product attention to fuse complementary features from different filtrations. The outputs are max-pooled, concatenated, and passed through two MLP layers to output a final topological feature vector.

Integration into the vision backbone occurs via attention-based residual gating. The topological vector passes through a bottleneck layer (C_l/r), expands to match the backbone's channel dimension, and applies a sigmoid activation to form a channel gate. Intermediate feature maps are multiplicatively modulated by this gate and updated via a residual connection with a learnable scalar α_l. The network is optimized end-to-end using a combined cross-entropy loss from both the vision and topology branches (controlled by $\lambda = 0.1$).

2) Pros:

- The attention-based residual gating allows topology to shape intermediate, multi-scale semantic representations rather than relying on isolated late-fusion concatenation.
- End-to-end learning of PDs via the STN and multi-head cross-attention effectively preserves higher-order point interactions and fuses complementary filtrations, avoiding hand-crafted vectorization bottlenecks.

- The "vineyard" algorithm's persistence-weighted stability scoring ensures the network focuses on clinically meaningful anatomical structures while pruning resolution-specific artifacts.

3) Cons:

- High parameter overhead; integrating the multi-stage PD encoder (STN, attention modules, MLPs) and channel gating increases the SwinV2-B backbone from 86.9M to over 144.2M parameters.
- Significant computational bottleneck during offline preprocessing; generating multi-scale PDs and executing the tracking algorithm takes over an hour for gradient filtrations on 4,000 images.
- Relies heavily on multiple specialized hyperparameters across the pipeline, including matching (τ_m) and stability (τ_s) thresholds for the vineyard algorithm, as well as the λ weight for balancing the combined loss function.

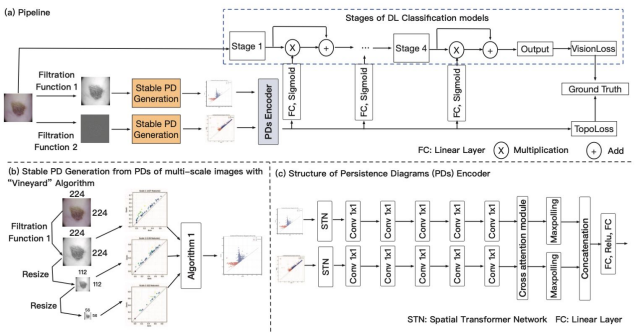

Fig. 6: The overall pipeline of the proposed topology-guided classification framework, illustrating the generation of stable persistence diagrams and their integration via the PDs encoder.

III. Implemented Approach: Hybrid Deep Learning and GCN Pipeline

This work implements a hybrid pipeline that combines deep visual feature extraction with graph-based learning to capture both global and localized patterns in ulcerative colitis (UC) colonoscopy images. The approach is designed to move beyond conventional image-level classification by explicitly modeling spatial relationships within images using Graph Convolutional Networks (GCNs).

A. Feature Extraction Backbone

All input images are first resized to 224×224 and normalized before being passed through a pre-trained **ResNet50** model. The final classification layer is removed, and the network is used purely as a feature extractor. This produces compact, high-dimensional embeddings that encode important visual cues such as texture, vascular patterns, and inflammation severity.

These features serve two purposes: (i) as a baseline representation for comparison with clustering-based approaches (e.g., X-Means), and (ii) as enriched node features in the graph-based models.

B. Graph Construction from Images

To incorporate spatial structure, each image is converted into a graph where nodes represent local regions and edges encode spatial adjacency. Two different graph construction strategies are implemented and compared.

1) Uniform Grid-Based Graph (Patch GCN): In this approach, each image is divided into a fixed grid (typically 7×7), resulting in 49 patches per image. Each patch forms a node in the graph.

Node features are computed in two ways:

- Mean pixel values (baseline implementation)
- ResNet-based embeddings extracted from each patch (improved variant)

Edges are created between neighboring patches using 4-connectivity (horizontal and vertical neighbors), forming a regular lattice graph structure. This representation is computationally efficient and preserves spatial locality.

2) Superpixel-Based Graph (SLIC GCN): To obtain a more semantically meaningful representation, images are also segmented into superpixels using the **SLIC (Simple Linear Iterative Clustering)** algorithm. Unlike uniform grids, superpixels adapt to image content and better align with anatomical structures such as mucosal regions and lesion boundaries.

Each superpixel is treated as a node, with features computed as the mean color/intensity of the region. Edges are constructed by detecting adjacency between neighboring superpixels based on pixel-level boundaries, resulting in an irregular graph structure.

C. Graph Convolutional Network (GCN)

Both graph representations are processed using a **Graph Convolutional Network (GCN)**. The implemented architecture consists of:

- Three graph convolution layers:
  - Layer 1: input $\rightarrow$ 64 channels
  - Layer 2: 64 $\rightarrow$ 128 channels
  - Layer 3: 128 $\rightarrow$ 256 channels
- ReLU activation after each layer
- Global mean pooling to aggregate node-level features into a graph-level representation
- Fully connected layer for final classification (4 classes corresponding to severity levels)

The GCN enables the model to aggregate both local features (from individual regions) and global context (across the entire image), making it suitable for capturing spatial patterns of inflammation.

D. Training and Evaluation

The models are trained using cross-entropy loss with the Adam optimizer. Performance is evaluated using Accuracy, Macro F1-score, and Quadratic Weighted Kappa (QWK), which is particularly relevant for ordinal severity prediction.

1) Patch GCN Results:

- Accuracy: 0.5771
- Macro F1-score: 0.3043
- QWK: 0.2902

2) Superpixel GCN Results:

- Accuracy: 0.5990
- Macro F1-score: 0.3111
- QWK: 0.2518

E. Discussion

Despite incorporating spatial structure through graph representations, the overall performance of the proposed models remains limited. The low **Macro F1-scores** (0.3043 and 0.3111) indicate poor class-wise discrimination, suggesting that the models struggle to differentiate between subtle severity levels, particularly intermediate classes such as MES 1 and MES 2. This aligns with the inherent inter-class similarity in UC grading, but also highlights insufficient feature sensitivity.

Furthermore, the **low QWK scores** (0.2902 and 0.2518) reveal weak ordinal consistency, indicating that predictions are often significantly distant from the true severity labels. This suggests that the model fails to capture the progression structure of disease severity, which is critical for MES classification.

A key limitation lies in the **graph construction**. The patch-based approach imposes a rigid grid that does not align with anatomical boundaries, leading to noisy node representations. While the superpixel-based method provides better structural alignment, it relies primarily on low-level features, limiting its ability to capture clinically meaningful patterns.

Additionally, the use of **pre-trained ResNet50 features without fine-tuning** reduces task-specific discriminability, and the relatively simple GCN with global mean pooling likely causes over-smoothing of important local features.

Although the superpixel approach shows marginal improvement in accuracy, the gain is minimal relative to its computational cost. Overall, the results indicate that improvements in feature representation and model expressiveness are necessary to fully leverage graph-based learning.

IV. Proposed Architecture: Dual-Branch Temporal Graph Attention and Multi-Scale CNN Network (DB-GAT-CNN)

A. Methodology

The proposed architecture is a novel, dual-branch network designed for automated Mayo Endoscopic Score (MES) classification directly from colonoscopy video segments. Recognizing that mucosal inflammation must be assessed both locally (specific lesions) and globally (overall extent across a tissue segment), the model processes video data through parallel spatial and temporal branches before dynamic fusion.

1) Global Branch (Temporal Graph Attention Network - GAT): This branch is responsible for capturing the broader context of the disease across the video sequence.

- **Graph Construction:** The input colonoscopy video is first partitioned into a sequence of frames. Each frame acts as a **node** in a complete graph. A pre-trained feature extractor is used to generate a feature vector for each frame. **Edges** are then established between nodes based on feature similarity—specifically, the cosine similarity between frame feature vectors.
- **Graph Attention:** A Graph Attention Network (GAT) operates on this structure. By linking frames with high cosine similarity, the GAT can relate visually and semantically similar frames, even if they are temporally distant (e.g., the camera panning away and returning to the same ulcer). The GAT updates node representations using a learned attention mechanism, computing coefficients α_{ij} that indicate the importance of node j's features to node i:

$$h_i^{(l+1)} = \sigma\left(\sum_{j \in \mathcal{N}(i) \cup \{i\}} \alpha_{ij} W h_j^{(l)}\right) \tag{1}$$

  This forms a robust, global understanding of the tissue segment's overall severity.

2) Local Branch (Multi-Scale CNN): Operating in parallel at the frame level, this branch is engineered to detect subtle, highly localized clinical markers of Ulcerative Colitis, such as micro-ulcers, spontaneous bleeding, and the loss of vascular patterns. It employs an Inception-style multi-scale convolutional block utilizing parallel filters of varying receptive fields (1×1, 3×3, and 5×5), followed by 2×2 pooling. This multi-scale approach ensures that granular texture variations—which have high intra-image variance in medical imagery—are captured accurately without being washed out by global pooling operations.

3) Dynamic Fusion Block (DF-Block): To integrate the temporal context from the GAT with the spatial precision of the CNN, the feature maps converge at a Dynamic Fusion Block. Rather than utilizing static concatenation, the DF-Block adaptively modulates the multi-scale local features of a frame based on the enriched global context provided by the GAT. This dynamically balances whether the final MES prediction for a specific region should be driven by a severe local lesion (CNN) or the broader mucosal landscape (GAT). The fused representation is then passed through a classifier to output the MES grade.

B. Pros

- **Handles Temporal Discontinuity:** By connecting nodes via cosine similarity rather than strict chronological order, the GAT effectively links non-consecutive frames of the same anatomical region, compensating for erratic camera movements or temporary occlusions.
- **Comprehensive Severity Assessment:** Perfectly mimics clinical assessment by combining the wide-area evaluation of a video segment (GAT) with zooming in on specific mucosal details (Multi-Scale CNN).
- **High Noise Robustness:** The GAT naturally down-weights isolated, low-quality frames (e.g., motion blur, fluid occlusion) that have low cosine similarity to the high-quality, informative frames in the segment.

C. Cons

- **Computational Overhead:** Extracting features for every frame and computing pairwise cosine similarities to construct the graph is computationally expensive, especially for long, high-framerate video sequences.
- **Dependency on Initial Embeddings:** The quality of the graph edges relies heavily on the quality of the initial feature extraction used to calculate the cosine similarity. If the backbone model fails to extract meaningful features, the graph structure will be flawed.
- **Memory Constraints:** Storing multi-scale CNN feature maps alongside the GAT's node representations for an entire video segment simultaneously may require significant GPU memory during training.

V. Conclusion

This project successfully developed a hybrid GCN framework for MES assignment. By leveraging SLIC superpixel graphs and ResNet-GCN integration, we explicitly model mucosal structure, addressing the inter-class similarity and intra-class variability challenges identified in existing literature.

References

[1] B. G. Becker, S. Fraessle, H. Yao *et al.*, "Ulcerative Colitis Severity Classification and Localised Extent (UC-SCALE): An Artificial Intelligence scoring system for spatial assessment of disease severity," *Journal of Crohn's and Colitis*, 2024.

[2] B. G. Becker, F. Arcadu, A. Thalhammer *et al.*, "Training and deploying a deep learning model for endoscopic severity grading in ulcerative colitis using multicenter clinical trial data," *Therapeutic Advances in Gastrointestinal Endoscopy*, vol. 14, 2021.

[3] K. Takabayashi, T. Kobayashi, K. Matsuoka *et al.*, "Artificial intelligence quantifying endoscopic severity of ulcerative colitis in gradation scale," *Digestive Endoscopy*, vol. 36, pp. 582–590, 2024.

[4] K. Takenaka, K. Ohtsuka, T. Fujii *et al.*, "Development and validation of a deep neural network for accurate evaluation of endoscopic images from patients with ulcerative colitis," *Gastroenterology*, vol. 158, pp. 2150–2157, 2020.

[5] R. W. Stidham, L. Cai, S. Cheng *et al.*, "Using computer vision to improve endoscopic disease quantification in therapeutic clinical trials of ulcerative colitis," *Gastroenterology*, vol. 166, pp. 155–167, 2024.

[6] Y. Wen, B. Chen, W. Shi *et al.*, "DB-HDFFN: Dual-branch hierarchical dynamic feature fusion network for medical image classification," *Biomedical Signal Processing and Control*, vol. 117, 2026.

[7] V. Aadiwal, V. Tanwar, B. Sharma, and D. P. Yadav, "Gastrointestinal lesion detection using ensemble deep learning through global contextual information," *Bioengineering*, vol. 12, no. 1329, 2025.