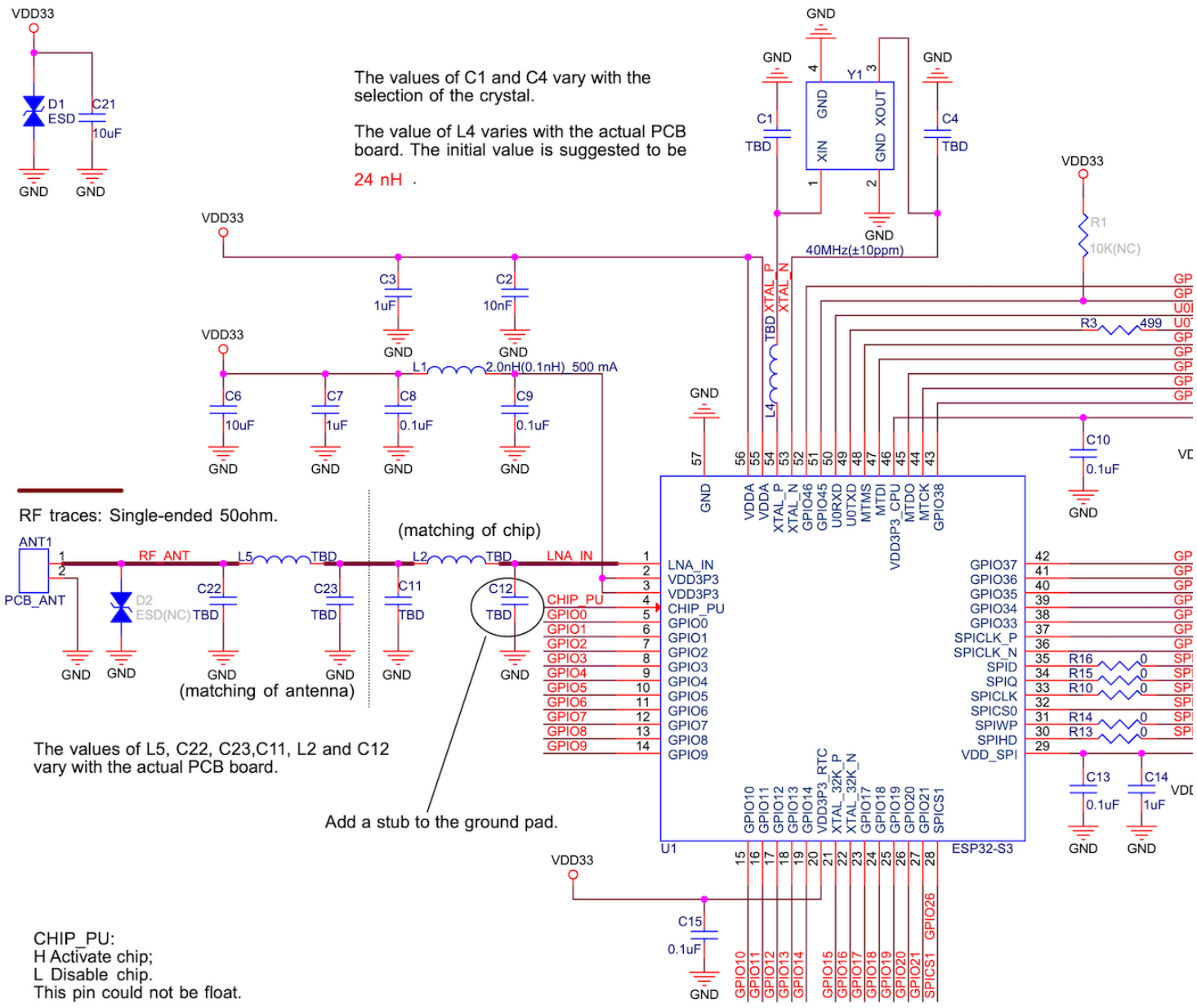
The values of C1 and C4 vary with the selection of the crystal.
The value of L4 varies with the actual PCB board. The initial value is suggested to be 24 nH .
RF traces: Single-ended 50ohm.
(matching of chip)
(matching of antenna)
The values of L5, C22, C23,C11, L2 and C12 vary with the actual PCB board.
Add a stub to the ground pad.
CHIP_PU:
H Activate chip;
L Disable chip.
This pin could not be float.
40MHz(±10ppm)
L1 2.0nH(0.1nH) 500 mA
ESP32-S3
U1
PCB_ANT
RF_ANT
LNA_IN
CHIP_PU

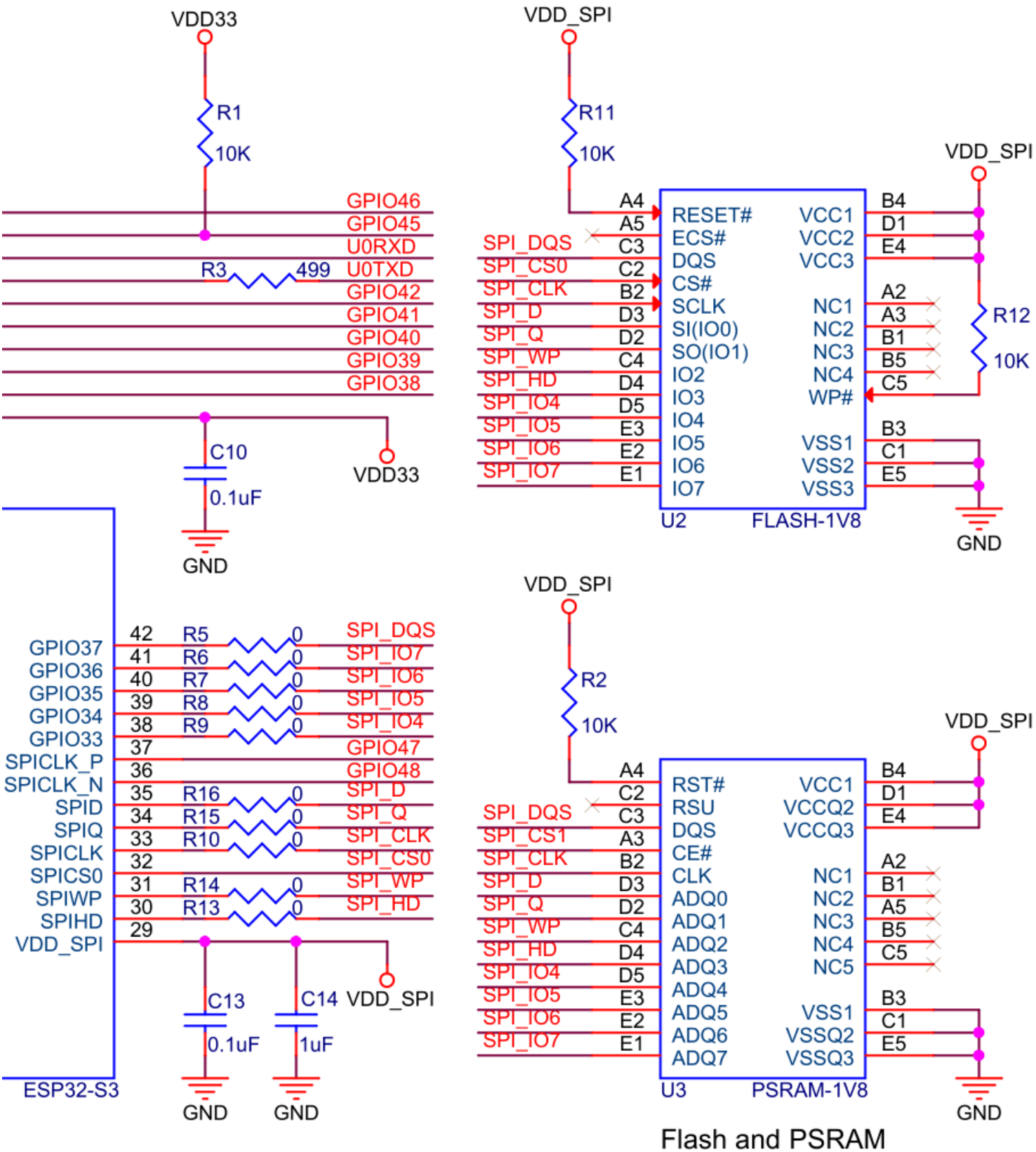

Flash and PSRAM