Ecole Centrale de Lyon – Car n°281
Design Report

Design overview

Valkyriz is the brand new electric car introduced by the French Team *Ecurie Piston Sport Auto - EPSA*. For their inaugural electric car, the team decided to design and construct a vehicle that would successfully pass the Scrutineering process and complete the Endurance Event, all while maintaining a reasonable budget.

In our maiden electric car project, our primary focus was ensuring safety and reliability, with performance being a third consideration. Hence, we have intentionally simplified the overall complexity of the car, and we have sourced the high voltage battery externally.

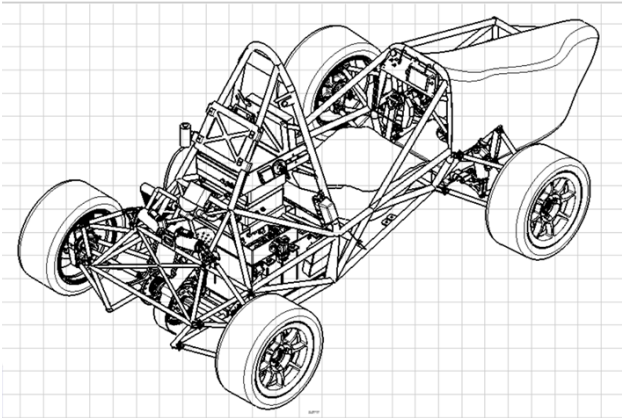

Figure 1 : Drawing of Valkyriz

Considerable effort has been dedicated to system verification and validation prior to assembly. One notable achievement is the development of a dedicated powertrain test bench to ensure its durability and reliability.

The car is constructed on a tubular steel space-frame chassis and is propelled by an axial flux synchronous permanent magnet electric motor. It features 13" tires without aerodynamic enhancements. Currently, the vehicle weighs 230 kg.

To structure the design, integration, and testing of the vehicle, the team follows the V-model approach. Beginning with the prioritisation of safety requirements and time expectations for dynamic events, aligned with the regulations of Formula Student Germany (FSG), the team formulated detailed specifications for each system and subsystem. Once architectural choices were made, the team proceeded to create CAD models for each part, carefully considering their manufacturability and ease of integration. As anticipated, iterations are necessary for the Low Voltage systems and the Tractive System Accumulator.

Following the design phase, production and procurement are initiated promptly to allow sufficient time for individual validation of each component. Subsequently, the integration and validation of subsystems take place. Simultaneously, we conduct testing and fine-tune the powertrain settings using our dedicated test bench. Once the vehicle is fully assembled, the testing phase begins. During track testing, we gather valuable feedback from drivers and analyse sensor data to make informed adjustments to optimise the vehicle settings.

Vehicle dynamics & suspensions

Tyre choice

We chose Continental C19 205/407 R13 tires with 13" rims because they are 20% lighter than other tires commonly used in Formula Student. The 13" rims provide more space for important components such as the upright, brake disc, A-Arms, and suspension rod. This allowed us to spend more time adapting other systems for the electric powertrain. Despite being lighter, the 13" rims still deliver excellent performance, as confirmed by simulations and on-track testing.

Suspension

To ensure optimal driver control of the vehicle, the suspension system was carefully designed to strike a balance between maximizing tire grip and providing a satisfying driving experience for non-professional drivers.

VALKYRIZ ELECTRIC

The design process began with the development of a non-parallel and unequal A-Arm architecture using 2D and 3D software. This architecture allowed for the desired camber variation during cornering and controlled movements of the roll centers. The A-Arms themselves were constructed using carbon composite tubes with aluminum bearing housings securely glued to each end. Carbon tubes were chosen for their significantly lighter weight compared to metal tubes. The bonding process of the bearing housings to the tubes required meticulous attention, as its strength is crucial for safety but challenging to measure non-destructively. Consequently, destructive testing is conducted on test parts produced alongside the actual A-Arms to validate this bonding process.

The selection of spherical bearings was driven by the need for reliable performance under fatigue conditions. Our calculations, coupled with data from the manufacturer, indicated that these bearings were suitable for this car. Furthermore, these spherical bearings have been validated through on-track testing of other vehicles within our team.

To achieve a compact and well-integrated design within the tubular frame, the team positioned the absorber assembly perpendicular to the chassis's longitudinal axis. Additionally, push rods and dampers were placed in the rocker plane to minimize compliance. This configuration results in linear behavior, simplifies calculations, and provides both a great driving feel and good driver control. To accommodate the desired travel range and allow for adjustments, Öhlins TTX25 mkII 4-way dampers were selected.

For the anti-roll system, the team opted for a U-bar setup at the front of the car because it fits seamlessly. The roll centre heights and total roll stiffness were calculated to counteract the car's natural tendency to oversteer. Indeed, it is easier for non-professional drivers to react to understeer. Stiffness can be adjusted by changing blade length in order to alter the vehicle's tendency towards oversteer or understeer.

Figure 2 : Exploded view of the front lower A-Arm

Steering system

The steering system must meet several constraints. To ensure ergonomic design and a good driving feel, load cases were considered when designing the steering pivot to minimize strain on the steering wheel. The caster angle and caster trail were specifically chosen to reduce torque and thus decrease driver muscle fatigue.

Reducing freeplay was a key focus for the team. Consequently, we opted for a Narcco rack, which has been tested on-track by previous vehicles of the team. The rigid connection between the rack and the column facilitates integration and repairs.

In terms of performance, we maximized lateral grip by using a constant turn model that calculates the optimal slip angles depending on vertical loads. The parallel steering system strikes the best compromise between design complexity and grip. We ensure a minimum turning radius of 2.25m, by adjusting the lever arm between the kingpin axis and the steering arm in the wheel using simple 2D models. Additionally, collisions are taken into account using the moving 3D CAD.

Wheels Assembly

The wheel assembly consists of two main components: the upright and the hub. The hub is bolted directly to the wheel rims, and it connects to the upright through angled roller bearings. The selection of the bearing references was carefully done, taking into account different load scenarios such as acceleration, braking, and turning. This was analyzed using software like MecaMaster 3D for tolerance and load simulations.

The design of the uprights focuses on minimizing their weight. Considering their positions as unsprung masses due to the suspension mounting points, efforts were made to keep them as lightweight as possible. These points can be adjusted to facilitate wheel assembly design but are largely determined by chosen vehicle dynamics.

To ease manufacturing processes, the team paid attention to reducing the number of cuts required during machining and standardized the edge filet radii. Additionally, mounting points were integrated into the upright bodies instead of using separate bolted brackets to minimize the number of parts involved.

Brake system

We carefully selected brake system components to achieve an optimal brake distribution of 70% to the front wheels, taking into account weight distribution and mass transfer during braking. We aimed for a deceleration of 4g. To meet these goals, we chose smaller rear brake discs and a balance bar with adjustable settings. After analyzing reliability through methods like Failure Mode and Effects Analysis (FMEA), we found that purchased brake calipers and master cylinders offer superior reliability compared to in-house designs. The slight price difference made purchasing the components a favorable choice.

Frame & Body

Ergonomics

We recognized that vehicle dynamics alone are not enough and that driver comfort and safety play a crucial role in performance. Therefore, we prioritized ergonomics in our design process.

To determine the optimal driver position, we created a full-scale replica of the cockpit architecture. The goal of this structure was to have drivers sit in it and provide feedback while adjusting the seat tilt, steering wheel position, and pedal assembly. Once these elements were optimized, we were able to select the appropriate harness points to ensure optimal driver restraint.

Finally, the pedals have been designed to provide precise and smooth control to the driver, taking into account the driver's input on the pedal box configuration. The current concept allows for convenient adjustments of brake distribution, throttle pedal angle range, and pedal depth.

Figure 3 : Our Ergonomic Bench

Frame

To ensure weldability and strength, we chose a tubular structure made of 25CrMo4 steel. The tubes have diameters ranging from 15mm to 30mm and wall thicknesses of either 1.5mm or 2mm. We focused on achieving the highest possible stiffness-to-mass ratio while ensuring proper implementation of all subsystems of the car. This ensures complete driver safety and optimal car behaviour in every event while also optimizing acceleration and cornering speed.

The main purpose of the frame was to provide support for the suspension system. Additionally, the frame was designed in order to enhance driver comfort using our ergonomic bench. Frame dimensions were created using adjustable parameters to quickly adapt to changes of other systems such as the engine, battery, suspension mounting points, and driver's position. This approach allowed for efficient assembly and maintenance of the car. The rear frame was designed with increased width to allow for easy insertion of the battery from below, simplifying the attachment of the battery container.

Finite element analysis helped us optimise the tubular structure. We used it to design a balanced tubular structure, where efforts are logically distributed. Expected mechanical behaviours were double-checked through physical testing.

Body

The main purpose of the vehicle body is to improve aerodynamics. We opted for a carbon fiber construction to minimize weight. The body design has also been optimized to improve aerodynamics, with a focus on the front end to enhance air penetration. The addition of lightweight sideplates offers more space for sponsor displays.

Engine and Powertrain

Engine

We searched for an engine that prioritized safety, robustness, and, above all, reliability. To select the appropriate engine, we utilized OptimumLap to determine the required power, torque, and maximum speed that complied with FSG rules while achieving our target time of 4.3 seconds for the acceleration event. Additionally, our team aimed to find a compact component that could easily integrate into the vehicle's design.

We ultimately opted for the EMRAX 228 synchronous permanent magnet motor. The motor was positioned just behind the battery pack and above the rear axle. This placement allowed us to minimize the wheelbase, facilitate battery extraction, and simplify high voltage wiring.

Inverter

We prioritized the reliability of the high voltage circuit when selecting the inverter. After reviewing the datasheets, we determined that both the Bamocar D3 inverter and the Rinehart PM100DX inverter met our requirements. We chose the Bamocar D3 due to its lighter weight.

Rules require an operating voltage of less than 600 VDC. Among compatible motor inverters, we selected one with a high voltage that still complied with this requirement: The Bamocar D3 has a maximum voltage of 700V. We can adjust it to our specific needs by implementing the appropriate resistance for voltage division.

Drivetrain

Firstly, we had to choose between a belt transmission and a chain transmission. Based on our reliability objective, we opted for a chain transmission. It offers better efficiency, a longer service life, and requires less maintenance. We couldn't use a gear transmission because the center distance between the motor and wheel axle was too long, which would have resulted in excessive weight.

To address the peak torque of the motor, which is 230 Nm, we connected the differential and the motor to reduce stress on the tubular frame. Chain tension was adjusted using two eccentric discs that enable longitudinal movement of the entire differential assembly.

Cooling system

The components of the powertrain that generate the most heat are the motor, inverter, and TS box. As a result, we made the decision to implement cooling measures for these components. Both the motor and inverter have matching operating temperature ranges, so we opted for a single-loop cooling circuit instead of a double-loop circuit. This choice allows us to significantly reduce weight without compromising our reliability objective.

The key component of this subsystem is the radiator, which was designed using the epsilon-NTU method. This method calculates the theoretical thermal power dissipation based on the dimensions of the radiator. Since we have no prior experience with these components, we considered the peak power to prevent any potential damage and ensure the design of a reliable system. We will validate our calculations with sensor data collection to optimize the scaling of this system for the upcoming years. Our aim was to dissipate the thermal power corresponding to the motor's peak power, rather than just the continuous power, in order to design a robust and reliable system.

Powertrain test bench

The team has decided to develop a test bench to validate the main components of the powertrain. While the battery pack will undergo testing by its manufacturer prior to bench testing, all other engine and powertrain system components, including the motor, inverter, electronics, and Vehicle Control Unit, will be bench tested. The primary objective is to ensure the proper functioning of all electrical systems before they are mounted inside the vehicle, thereby ensuring reliability. Additionally, the test bench provides a safer environment for the team to familiarise themselves with new technologies.

This year, our main focus is on verifying the ability of the components to withstand demanding loads, ranging from high-intensity peak usage to prolonged operation.

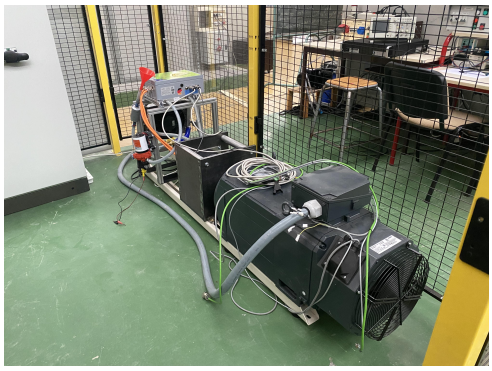

Figure 4 : Our Powertrain Test Bench

Electrical

Electronic

The electrical system was designed around our programmable Vehicle Control Unit (VCU) provided by Ecotron. The user-friendly software of the VCU allows us to easily develop and implement functions that manage all electrical components of the vehicle. In order to comply with regulations and ensure reliability, certain systems are required to operate independently. These include:

1. A controller compatible with EMRAX motors that operates at the voltage of our DC battery: The BAMOCAR D3 servo amplifier. This servo amplifier is also user-friendly as it manages motor torque based on commands from the VCU. It communicates with the VCU using the CAN protocol.
2. The BMS (Battery Management System) of our TS accumulator communicates with the VCU via CAN to ensure proper monitoring and management of the battery system.

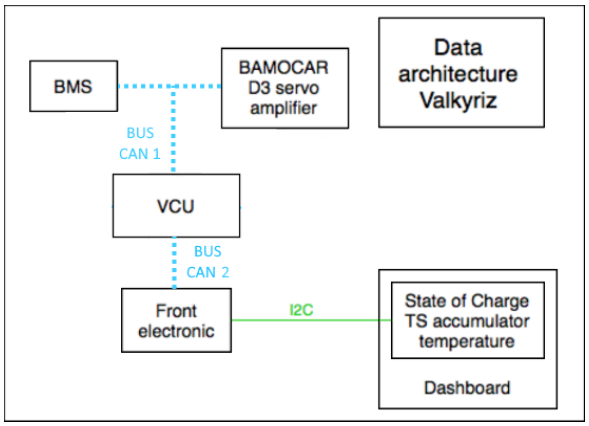

Figure 5 : Data architecture on the vehicle

To enhance reliability, some functions are performed by alternative systems instead of relying solely on the VCU. For instance, a front electronic card equipped with a Teensy board is responsible for displaying only necessary information to the driver, such as the state of charge and temperature of the TS accumulator.

To ensure secure transmission of information, we utilize three CAN buses: one connecting the BAMOCAR D3 servo amplifier, BMS, and VCU; another connecting the VCU and the front electronic control unit responsible for the dashboard display.

Electrical Harness

The wires were sized based on their maximum current and voltage carrying capacity. We chose the smallest section size possible to minimize weight and reduce harness cost. All electrical components are fitted with fuses and meet the standards for vibration and environmental protection.

After designing the electrical harness, the team measured various distances on the chassis to create a flat version of the low voltage harness. Sufficient length was included to allow for wire braiding and bending. The arrangement of the rear unit was developed to optimize space while ensuring easy installation.

Protective tape was used to secure and shield the wires, providing mechanical protection. The electrical harness wires are shielded from electromagnetic waves emitted by the high voltage harness by using an armored sheath. This helps minimize any potential effects of these waves on the vehicle. An additional layer of protective tape was added to safeguard the electromagnetic shielding.

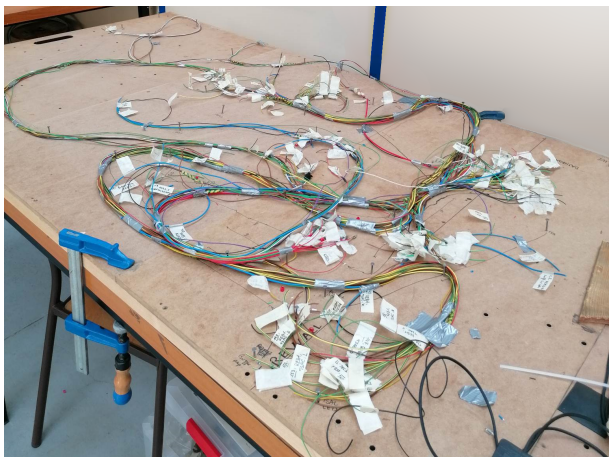

Figure 6 : Electrical Harness on the board

Battery Pack

To ensure the safe design of the battery pack, we decided to purchase an existing component. This reduced the risks associated with design and manufacturing. In particular, both the Battery Management System (BMS) and the cells will use the references provided by the supplier. We used Matlab simulations to calculate the energy required to complete the Endurance Event, considering the motor characteristics and Formula Student rules. Based on this analysis, we designed the battery architecture: 140s5p cells divided into 10 modules of 14s5p. The battery has a nominal voltage of 518V, a continuous current of 150A, and a capacity of 7.77kWh.

The manufacturer will conduct thorough verifications to validate this data. We will also test the battery pack on our powertrain test bench, assessing its integration with other components. Each test will be well-documented in our GIT repository to preserve all relevant data. Our focus is not only on changes in operating voltage and state of charge, but also on the thermal behaviour of the battery pack. Our main priority is to define the safe usage limits of the accumulator system to ensure overall safety in all circumstances.

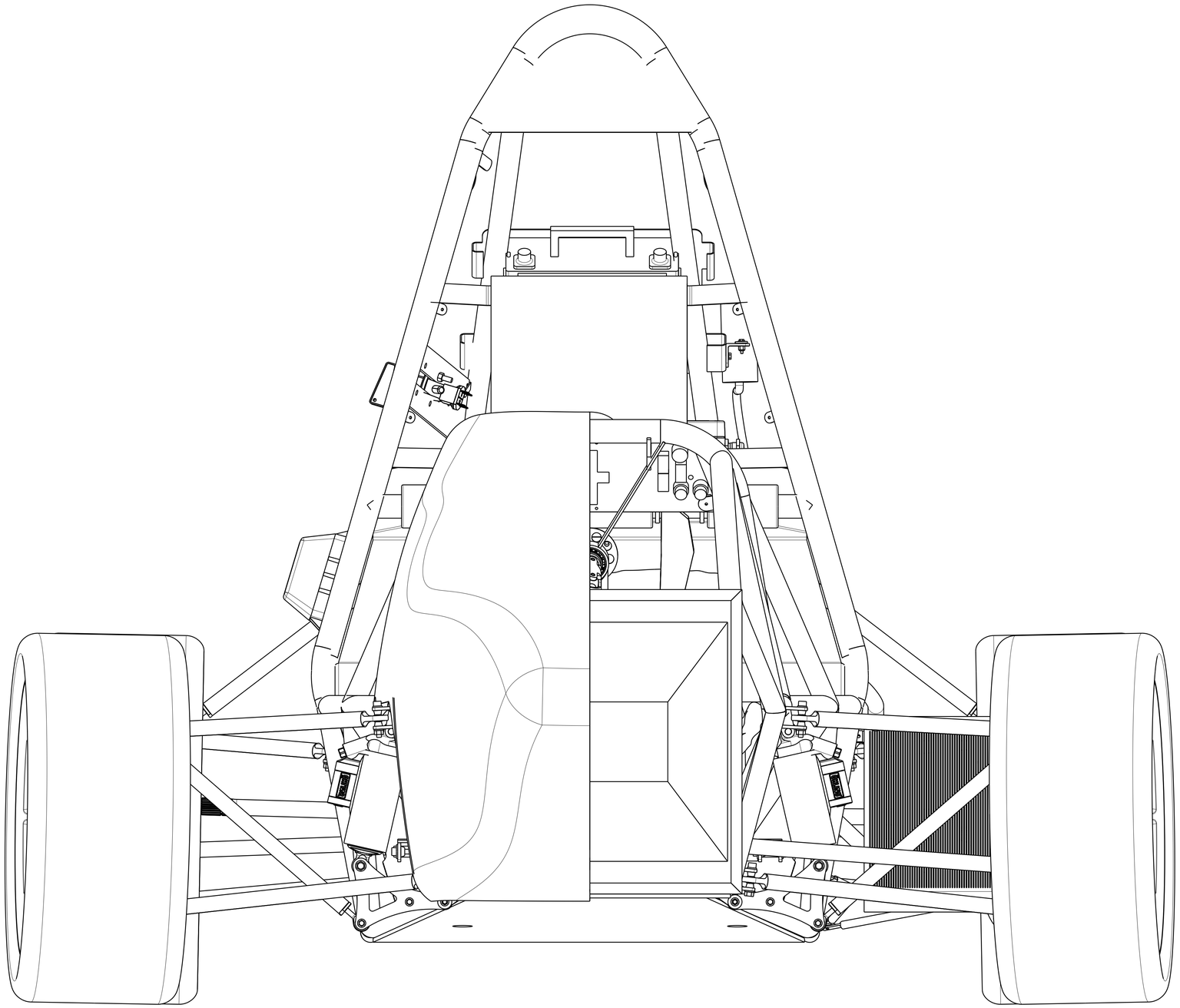

SIZE		
A1		Design Report Face View
SCALE		DRAWING NUMBER
1:3		Ecurie Piston Sport Auto - car n.81

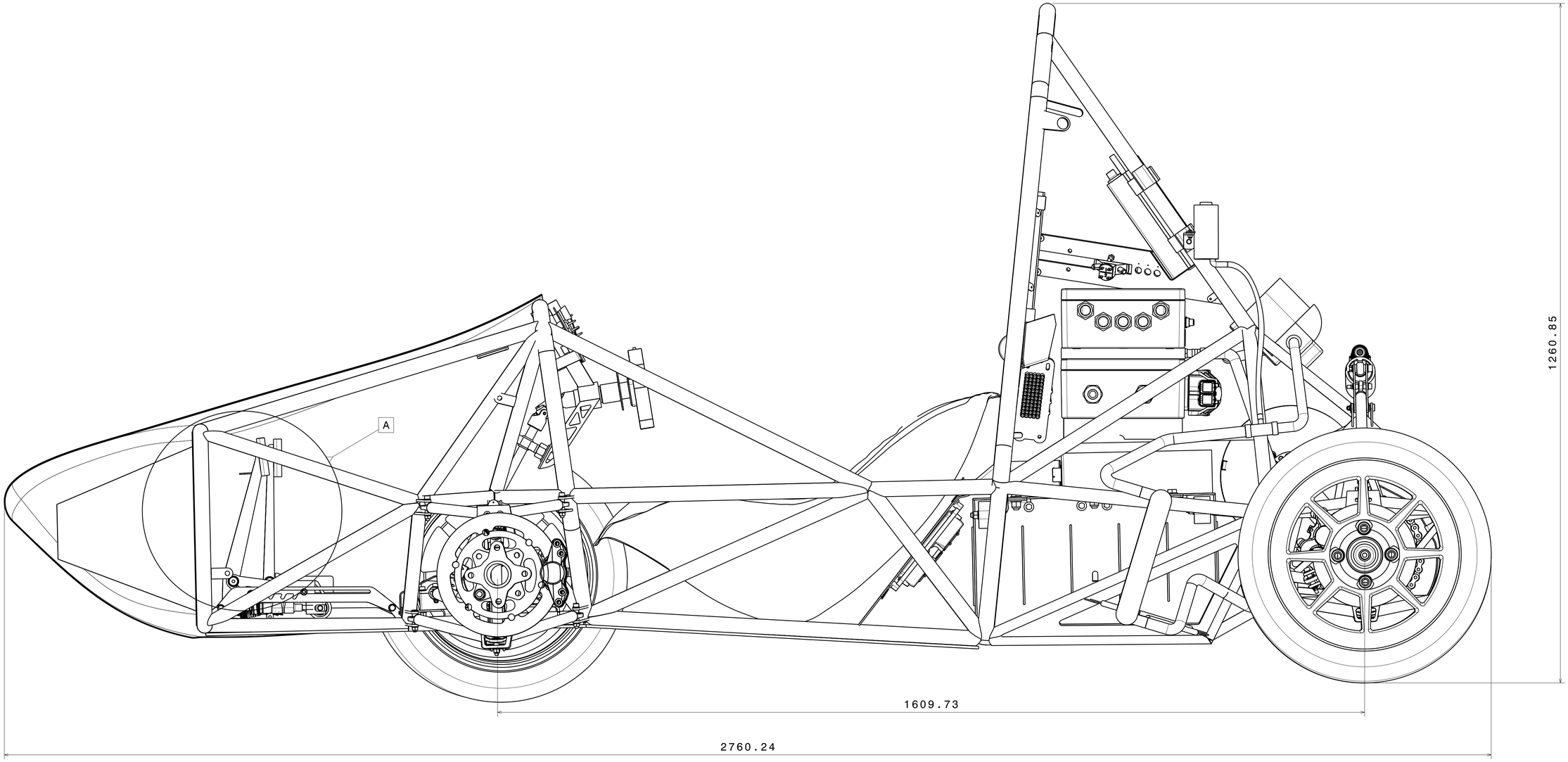

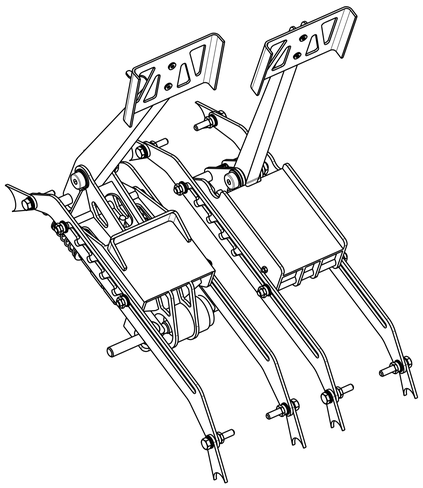

Detail A: Pedals
Scale : 1:3

SIZE A1	Design Report Side View
SCALE 1:4	DRAWING NUMBER Ecurie Piston Sport Auto - car n.81

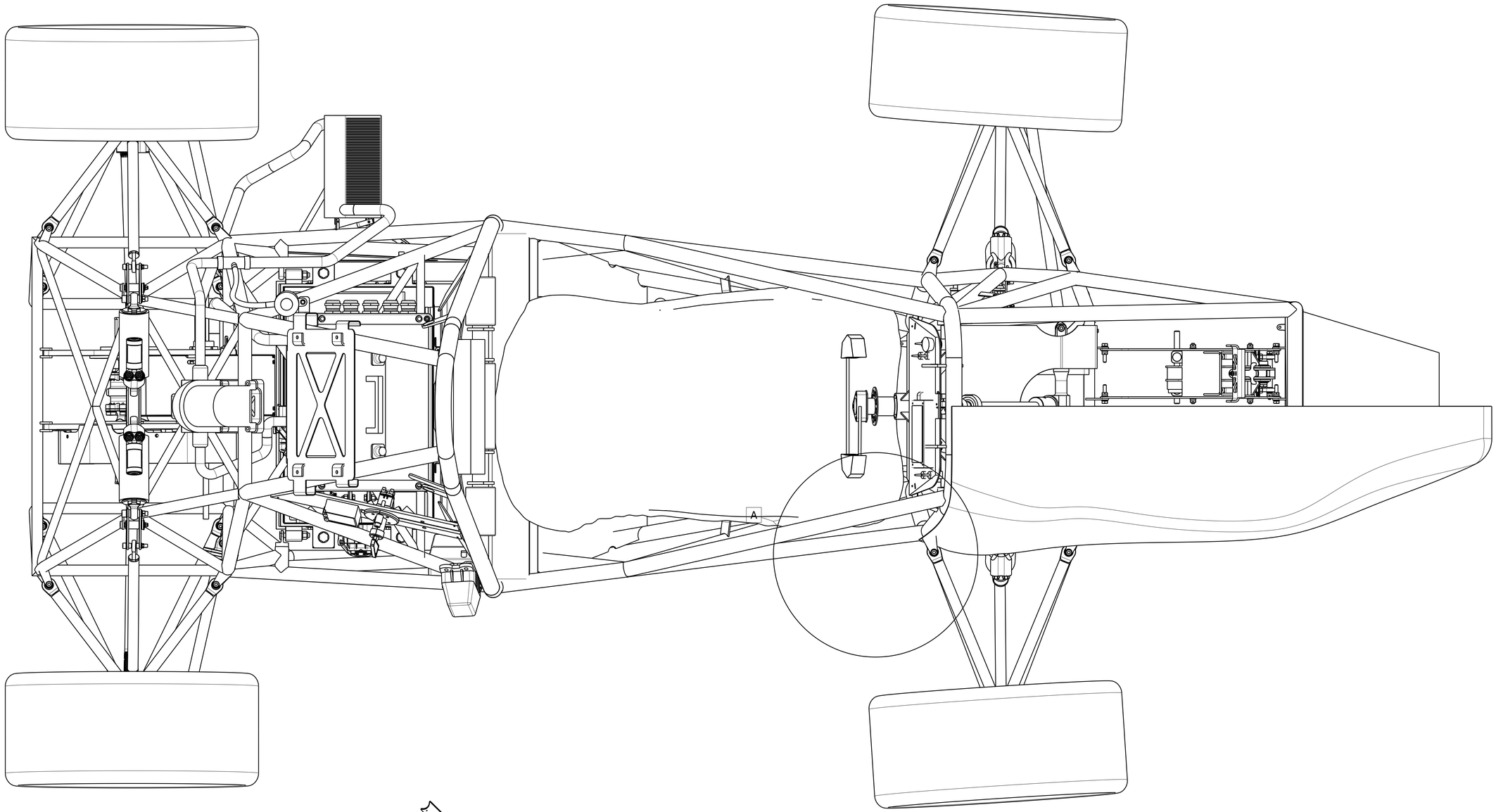

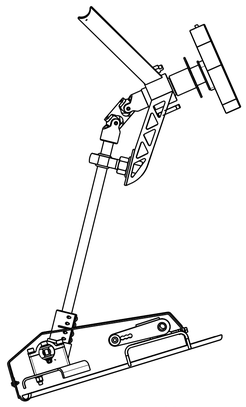

Detail A: steering system
Scale : 1:5

SIZE A1	Design Report Top View
SCALE 1:4	DRAWING NUMBER Ecurie Piston Sport Auto - car n.81