École Centrale Lyon

Bulkhead compliance

FORMULA STUDENT GERMANY

Impact Attenuator Data Form - Standard IA Design

This form must be completed and uploaded to the "My Team" area on the FSG website **no later than the date specified** in the Action Deadlines. A printed copy of this form must be presented together with the vehicle at Technical Inspection.

The Impact Attenuator Data (IAD) and supporting calculations must be submitted electronically in Adobe Acrobat format (*.pdf).

Contact Details

Car Number	81
University Name	Ecole Centrale Lyon

Team Contact Person

Last name, First Name	Aït-Oukhatar, Saad
Telephone Number	+33 6 01 30 66 33
E-mail address	saad.ait-oukhatar@ecl21.ec-lyon.fr

Please NOTE: FS Germany accepts only dynamic test as mentioned in T3.19.1!
Please NOTE: In case a dynamic test is performed, a certificate including contact details of and signed by either the institute where the test was performed, or a responsible of the university must be included in the report.

Attach Proof of Impact Attenuator

If the IA (Impact Attenuator) is a "Standard IA Design", the following points must be included:

1. The first page must always be this FSG Impact Attenuator Data Form
2. The report must be written in „engineering style" (e.g. contents, captions, symbols and abbreviations, page numbers)
3. Design of IA, positioning on the AIP and IA volume (T3.17.2) above the ground (dimensions in mm)
4. Method for attachment of the IA to the AIP (including data sheets e.g. if it bonded together)
5. Dimensions of the front bulkhead (dimensions in mm)
6. Proof of additional diagonal or X-bracing in the bulkhead or equivalent per T3.17.7, if applicable
7. Design of the AIP (material, thickness and dimension in mm)
8. Method for attachment of the IA assembly (AIP) to the front bulkhead
9. Receipt of the material, a packing slip or letter of donation of the IA
10. Pictures (or sketches) of the attachment on the car
11. Please comply with the particular rules for front wings and positioning of non-crushable such as sensors, if applicable

Summary

1 Design of IA, positionning on the AIP **3**

2 Method for attachment of the IA to the AIP **4**

3 Dimensions of the front bulkhead and proof of an additional diagonal **5**

4 Design of the AIP **6**

5 Method for attachment of the AIP to the front bulkhead **7**

6 Proof of the IA material reception **10**

1 Design of IA, positionning on the AIP

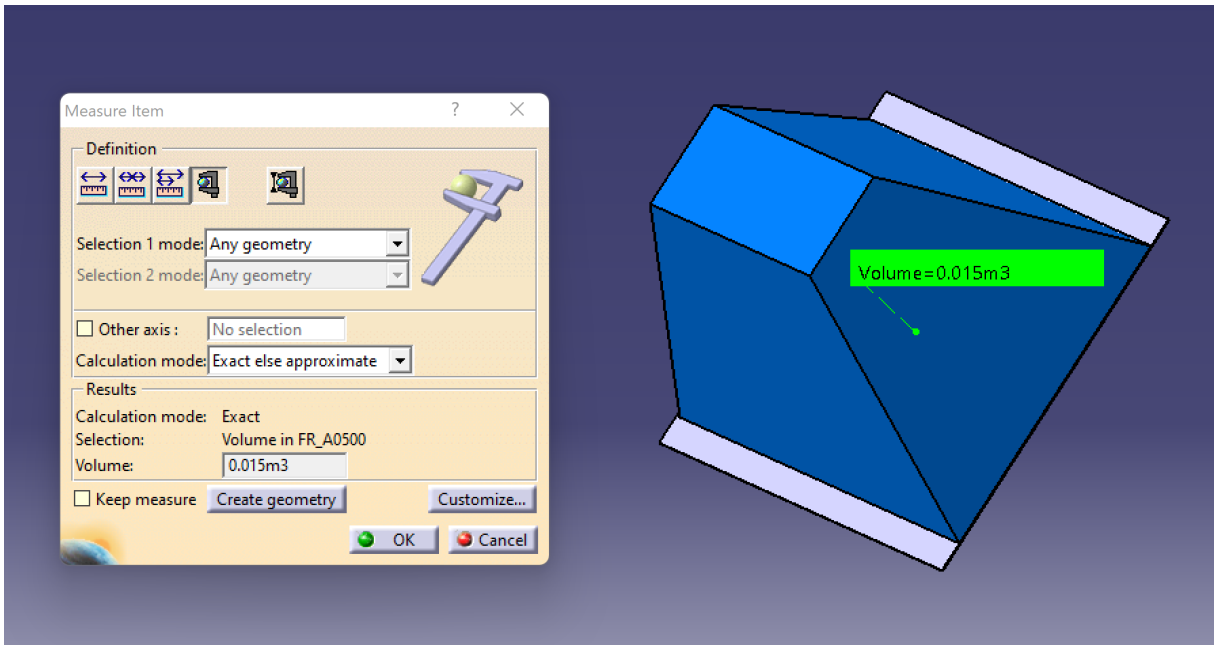

FIGURE 1 – IA volume

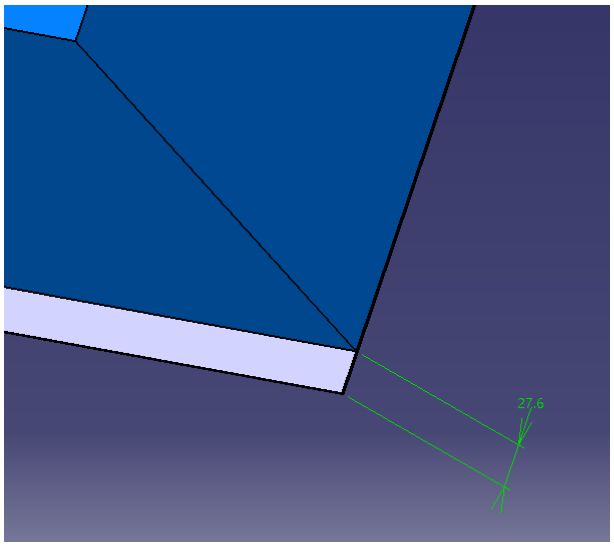

FIGURE 2 – IA positioning on the AIP

The IA has a volume of 0.015 m^3. It is centered on the AIP with a gap of 27.6mm on each side as shown on the CATIA model above in Figure 1 and Figure 2.

2 Method for attachment of the IA to the AIP

The Impact Attenuator is glued to the Anti-Intrusion plate. Since what data was needed concerning the glue used, we've decided to join its data sheet to the current document. You will find it in the mail.

3 Dimensions of the front bulkhead and proof of an additional diagonal

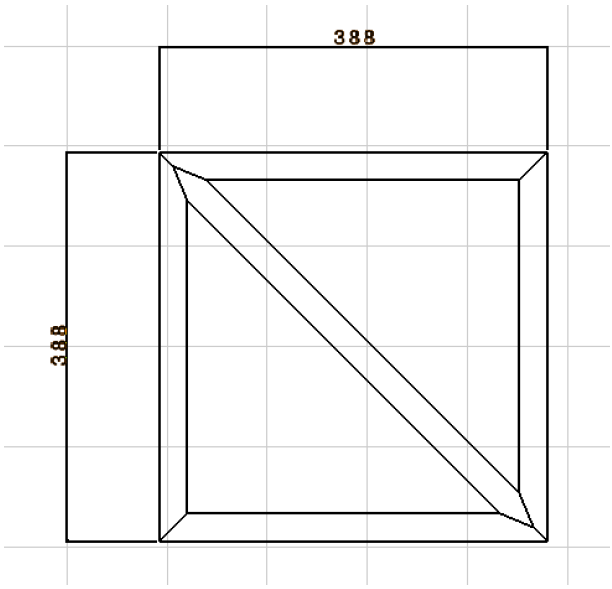

FIGURE 3 – Dimensions of the front bulkhead

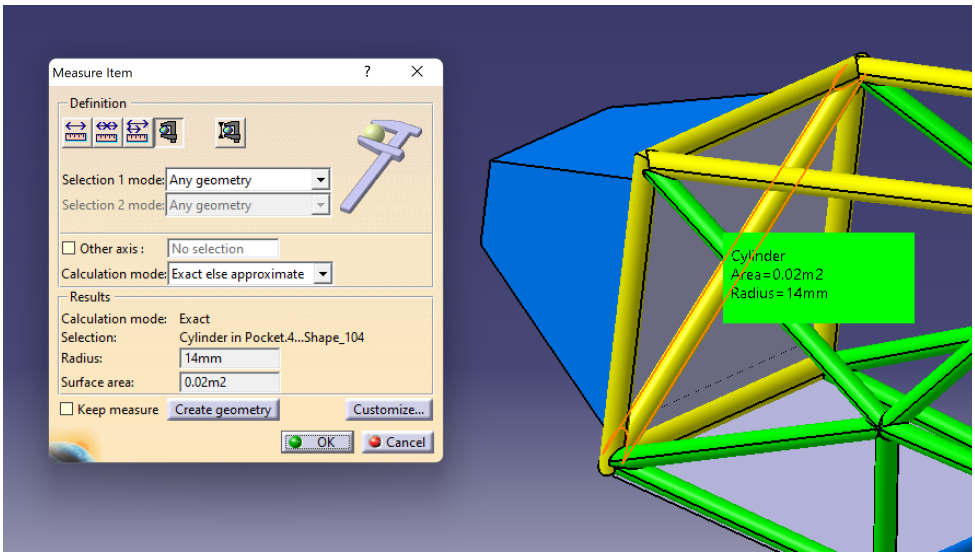

FIGURE 4 – Dimensions of the additional diagonal

The front bulkhead measures 388 mm x 388 mm. The tubes have a radius of 14 mm.

4 Design of the AIP

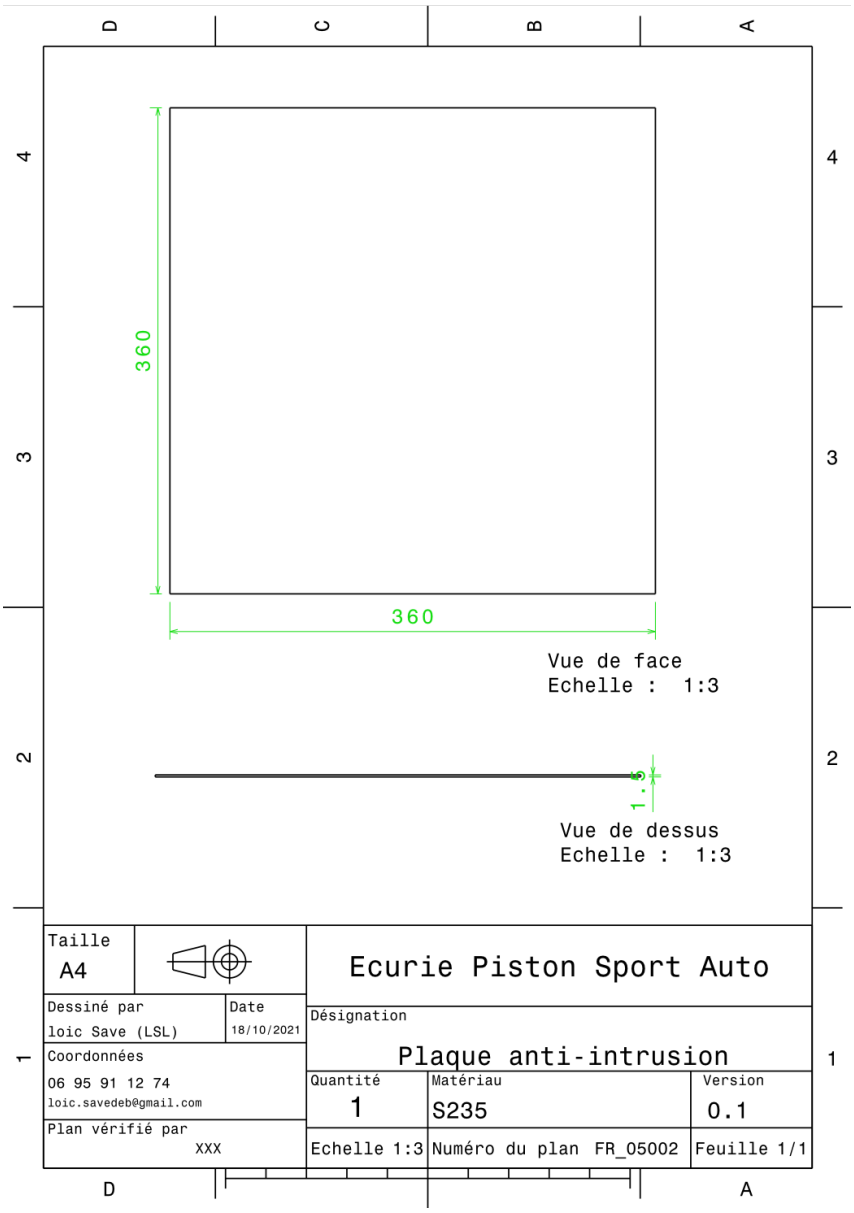

FIGURE 5 – Development plan of the AIP

Dimensions of the AIP are all represented on Figure 5. The material is steel S235.

5 Method for attachment of the AIP to the front bulkhead

The AIP is welded on the front bulkhead as shown in the following figures.

FIGURE 6 – General view of the IA

To be more precise, there are 5 welding points on the upperside, as shown on Figure 7, and 3 welding points on the other sides as demonstrated on Figures 8

FIGURE 7 – Welding points on the upper side

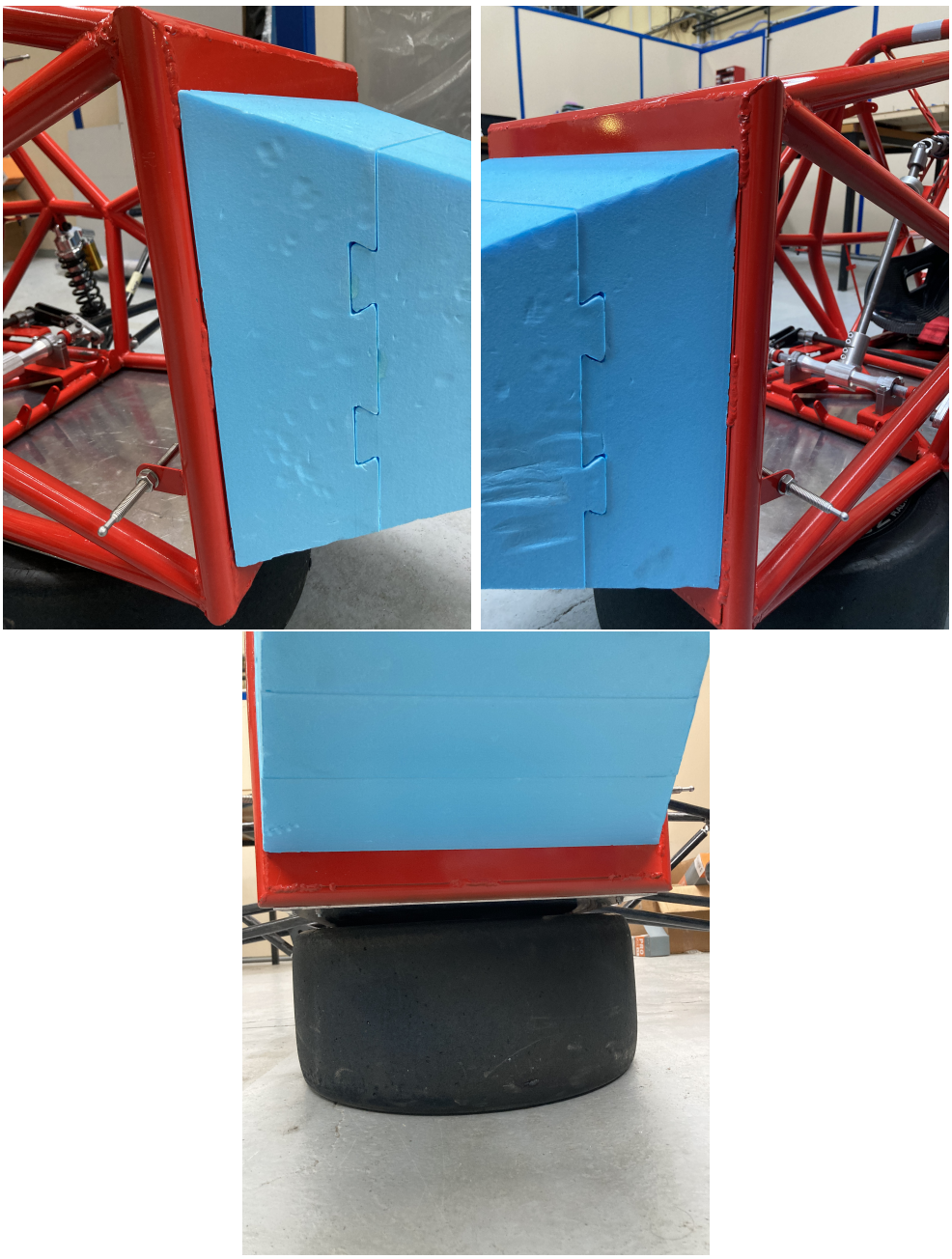

FIGURE 8 – Welding points on the left, right, and lower sides

6 Proof of the IA material reception

Carboni e metalli srls
Via Giovanni XXIII 7/b - 43040 - Varano de' Melegari (PR)
Vat Id 02850810348 - C.F. 02850810348

INVOICE no. 38/2022 of 2022-07-11

VAT ID FR66196901870
EMAIL matthieu.ledoux@ecl19.ec-lyon.fr

RECIPIENT
Ecole Centrale de Lyon
Service Facturation Bat Z2 36 avenue Guy de Collongue
69134 ECULLY (ECULLY)
Fatima Elboukhrissi
France

SUBJECT
Ordine numero 6217

CODE	DESCRIPTION	AMOUNT
B00-F7-003	Standard Impact Attenuator Type 12	€ 660.00
	Spese di Spedizione	€ 56.40

NOTES Weight 2kg

Documento generato con FatturaInCloud.it

PAYMENT METHOD
Bonifico Bancario/Bank Transfer
IBAN: IT58Z0538712701000002623454
SWIFT: BPMOIT22XXX
Intestatario/Owner: Carboni e Metalli srls

DUE DATES
2022-07-11: € 716.40

VAT SUMMARY	GROSS AMOUNT	TAXES
0% - *Non imponibile ai sensi dell'Art. 41, Comma 1, Decreto legge 331/93*	716.40	€ 0.00

Total amount € 716.40

€ 716.40

Invoice no. 38/2022 of 2022-07-11 - 1 / 1

Carboni e metalli srls
www.carboniemetalli.com - we@carboniemetalli.com

FIGURE 9 – Proof of the IA material reception

Here is the invoice of the IA.