Ecurie Piston Sport Auto

CAR #81

ÉCOLE CENTRALE LYON

Cost report

Car #81
Formula SAE Italy
Ecole Centrale de Lyon

Table of contents

for: **Ecole Centrale de Lyon**

Car # 81

Cost Summary	Page 3
BOM	Page 4
Brake System	Page 10
Engine and Drivetrain	Page 28
Frame & Body	Page 148
Electrical	Page 228
Miscellaneous, Finish and Assembly	Page 257
Steering System	Page 301
Suspension System	Page 342
Wheels, Wheel Bearings and Tires	Page 469

Cost Summary Basics

for: **Ecole Centrale de Lyon**
Car # 81

Area Totals	Materials	Processes	Fasteners	Tooling	Total
Brake System	$ 939.43	$ 126.79	$ 5.73	$ 0.33	$ 1,072.28
Engine & Drivetrain	$ 2,846.53	$ 1,219.59	$ 50.94	$ 26.00	$ 4,143.06
Frame & Body	$ 1,452.39	$ 1,891.50	$ 289.30	$ 122.72	$ 3,755.91
Electrical	$ 1,442.84	$ 378.99	$ 3.18	$ 4.35	$ 1,829.37
Miscellaneous, Finish & Assembly	$ 151.84	$ 154.87	$ 6.11	$ 11.33	$ 324.15
Steering System	$ 103.71	$ 225.71	$ 3.84	$ 2.83	$ 336.09
Suspension System	$ 1,527.30	$ 717.42	$ 23.78	$ 30.67	$ 2,299.17
Wheels, Wheel Bearings and Tires	$ 1,694.71	$ 210.23	$ 23.45	$ -	$ 1,928.39
Total Vehicle	$ 10,158.74	$ 4,925.09	$ 406.33	$ 198.24	$ 15,688.41

Composition for total vehicle:

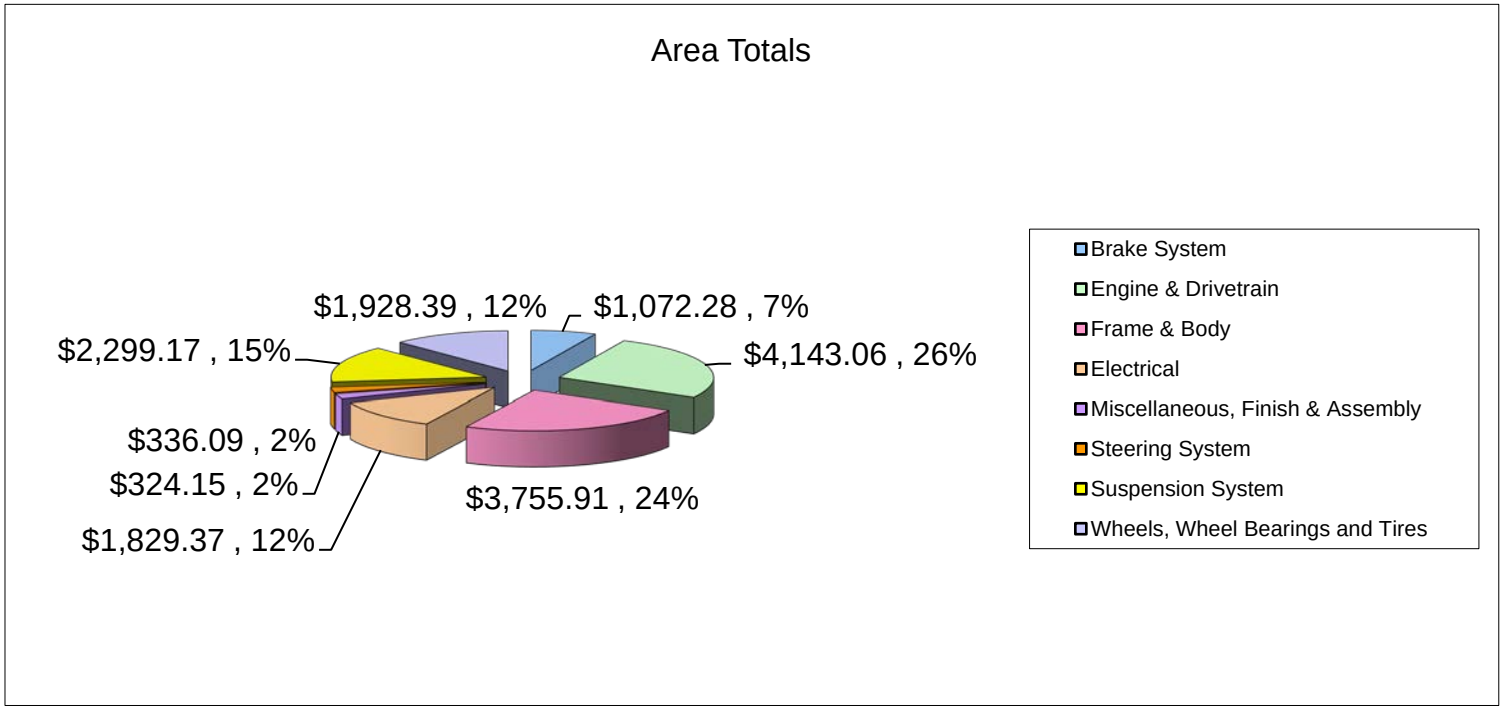

University	Ecole Centrale de Lyon
Competition Code	FSAEI
Year	17
Car #	81

Total Vehicle Cost	$ 15,688.41

Line Num.	Area of Commodity	Asm/Prt #	Rev. Lvl.	Asm	Component	Description	Unit Cost	Quantity	Material Cost	Process Cost	Fastener Cost	Tooling Cost	Total Cost	Details Page Number
1	Brake System	BR A0001	AA		Front Brake Rotor		$ 89.94	2	$ 84.92	$ 4.41	$ 0.61	$ -	$ 179.88	11
2	Brake System	BR 01001	AA	Front Brake Rotor	Brake Rotor		$ 4.06	2	$ 1.47	$ 2.60	$ -	$ -	$ 8.13	12
3	Brake System	BR 01002	AA	Front Brake Rotor	Brake Shrink Disc		$ 7.37	2	$ 1.89	$ 5.48	$ -	$ -	$ 14.73	13
4	Brake System	BR 01003	AA	Front Brake Rotor	Brake Rotor Button		$ 1.39	12	$ 0.02	$ 1.38	$ -	$ -	$ 16.73	15
5	Brake System	BR 01004	AA	Front Brake Rotor	Caliper Spacer		$ 0.44	4	$ 0.03	$ 0.40	$ -	$ -	$ 1.74	16
6	Brake System	BR A0002	AA		Rear Brake Rotor		$ 89.27	2	$ 84.92	$ 3.71	$ 0.64	$ -	$ 178.54	18
7	Brake System	BR 02001	AA	Rear Brake Rotor	Brake Rotor		$ 4.06	2	$ 1.47	$ 2.60	$ -	$ -	$ 8.13	19
8	Brake System	BR 02002	AA	Rear Brake Rotor	Brake Shrink Disc		$ 7.37	2	$ 1.89	$ 5.48	$ -	$ -	$ 14.73	20
9	Brake System	BR 02003	AA	Rear Brake Rotor	Brake Rotor Button		$ 1.39	12	$ 0.02	$ 1.38	$ -	$ -	$ 16.73	22
10	Brake System	BR A0003	AA		Brake Circuit Assembly		$ 629.17	1	$ 585.63	$ 39.98	$ 3.23	$ 0.33	$ 629.17	23
11	Brake System	BR 03001	AA	Brake Circuit Assembly	Brake Reservoir Mount		$ 2.21	1	$ 0.16	$ 2.04	$ -	$ -	$ 2.21	24
12	Brake System	BR 03002	AA	Brake Circuit Assembly	Brake Reservoir Tab		$ 1.55	1	$ 0.03	$ 1.52	$ -	$ -	$ 1.55	26
13	Brake System				Area Total				$ 939.43	$ 126.79	$ 5.73	$ 0.33	$ 1,072.28	
14	Engine & Drivetrain	EN A0001	AA		Engine		$ 1,586.85	1	$ 1,500.15	$ 80.29	$ 5.74	$ 0.67	$ 1,586.85	29
15	Engine & Drivetrain	EN 01001	AA	Engine	Flat sump		$ 41.21	1	$ 10.83	$ 22.05	$ -	$ 8.33	$ 41.21	30
16	Engine & Drivetrain	EN 01002	AA	Engine	Rear tab		$ 1.33	2	$ 0.14	$ 1.19	$ -	$ -	$ 2.66	31
17	Engine & Drivetrain	EN 01003	AA	Engine	Rear tube		$ 2.38	1	$ 0.14	$ 2.24	$ -	$ -	$ 2.38	33
18	Engine & Drivetrain	EN A0002	AA		Exhaust System		$ 13.46	1	$ -	$ 11.59	$ 0.54	$ 1.33	$ 13.46	35
19	Engine & Drivetrain	EN 02001	AA	Exhaust System	Exhaust Tip		$ 5.81	4	$ 0.64	$ 5.17	$ -	$ -	$ 23.24	36
20	Engine & Drivetrain	EN 02002	AA	Exhaust System	Exhaust Flange		$ 1.74	4	$ 0.35	$ 1.38	$ -	$ -	$ 6.95	38
21	Engine & Drivetrain	EN 02003	AA	Exhaust System	Primary Collector tubing		$ 10.22	1	$ 0.43	$ 9.78	$ -	$ -	$ 10.22	40
22	Engine & Drivetrain	EN 02004	AA	Exhaust System	Muffler		$ 40.65	1	$ 24.13	$ 16.52	$ -	$ -	$ 40.65	41
23	Engine & Drivetrain	EN 02005	AA	Exhaust System	Secondary collector tubing		$ 21.71	4	$ 2.87	$ 18.84	$ -	$ -	$ 86.82	42
24	Engine & Drivetrain	EN 02006	AA	Exhaust System	Muffler Collar		$ 10.65	1	$ 10.00	$ 0.62	$ 0.04	$ -	$ 10.65	43
25	Engine & Drivetrain	EN 02007	AA	Exhaust System	Muffler Mount		$ 3.86	1	$ 0.17	$ 3.69	$ -	$ -	$ 3.86	44
26	Engine & Drivetrain	EN 02008	AA	Exhaust System	Spacer		$ 1.46	1	$ 0.06	$ 1.40	$ -	$ -	$ 1.46	45
27	Engine & Drivetrain	EN A0003	AA		Fuel Tank Assembly		$ 42.77	1	$ 27.51	$ 12.21	$ 1.72	$ 1.33	$ 42.77	46
28	Engine & Drivetrain	EN 03001	AA	Fuel Tank Assembly	Fuel Tank (with filler neck)		$ 73.61	1	$ 21.09	$ 47.53	$ -	$ 5.00	$ 73.61	47
29	Engine & Drivetrain	EN 03002	AA	Fuel Tank Assembly	Filler Neck Collar		$ 14.59	1	$ 8.10	$ 4.74	$ 1.08	$ 0.67	$ 14.59	50
30	Engine & Drivetrain	EN 03003	AA	Fuel Tank Assembly	Filler Cap		$ 22.60	1	$ 15.34	$ 7.26	$ -	$ -	$ 22.60	51
31	Engine & Drivetrain	EN 03004	AA	Fuel Tank Assembly	Filler Tube		$ 13.25	1	$ 8.20	$ 3.30	$ 1.08	$ 0.67	$ 13.25	52
32	Engine & Drivetrain	EN 03005	AA	Fuel Tank Assembly	Lateral tab		$ 1.99	1	$ 0.10	$ 1.89	$ -	$ -	$ 1.99	53
33	Engine & Drivetrain	EN 03006	AA	Fuel Tank Assembly	Rear tab		$ 1.66	1	$ 0.02	$ 1.64	$ -	$ -	$ 1.66	55
34	Engine & Drivetrain	EN 03007	AA	Fuel Tank Assembly	Front tab		$ 1.68	1	$ 0.02	$ 1.66	$ -	$ -	$ 1.68	57
35	Engine & Drivetrain	EN 03008	AA	Fuel Tank Assembly	Compression tab		$ 2.05	1	$ 0.11	$ 1.94	$ -	$ -	$ 2.05	59
36	Engine & Drivetrain	EN A0004	AA		Fuel System		$ 425.56	1	$ 392.83	$ 31.75	$ 0.31	$ 0.67	$ 425.56	61
37	Engine & Drivetrain	EN 04001	AA	Fuel System	Fuel Rail		$ 7.64	1	$ 0.47	$ 4.84	$ -	$ 2.33	$ 7.64	63
38	Engine & Drivetrain	EN 04002	AA	Fuel System	Fuel Pump Collar		$ 3.35	1	$ 0.05	$ 3.30	$ -	$ -	$ 3.35	64
39	Engine & Drivetrain	EN 04003	AA	Fuel System	Pressure Regulator Tab		$ 2.03	1	$ 0.03	$ 2.00	$ -	$ -	$ 2.03	65
40	Engine & Drivetrain	EN 04004	AA	Fuel System	Fuel Pump Tab		$ 1.55	1	$ 0.01	$ 1.54	$ -	$ -	$ 1.55	67
41	Engine & Drivetrain	EN A0005	AA		Air Intake System		$ 62.47	1	$ 36.00	$ 22.00	$ 4.47	$ -	$ 62.47	69
42	Engine & Drivetrain	EN 05001	AA	Air Intake System	Upper Plenum		$ 18.81	1	$ 1.76	$ 17.06	$ -	$ -	$ 18.81	70
43	Engine & Drivetrain	EN 05002	AA	Air Intake System	Pipes		$ 16.31	1	$ 1.52	$ 14.78	$ -	$ -	$ 16.31	71
44	Engine & Drivetrain	EN 05003	AA	Air Intake System	Plenum Mount		$ 0.75	2	$ 0.06	$ 0.69	$ -	$ -	$ 1.49	72
45	Engine & Drivetrain	EN 05004	AA	Air Intake System	Obstruction Plate		$ 0.85	2	$ 0.10	$ 0.75	$ -	$ -	$ 1.70	74
46	Engine & Drivetrain	EN 05005	AA	Air Intake System	Bottom Plenum		$ 5.48	1	$ 2.60	$ 2.88	$ -	$ -	$ 5.48	76
47	Engine & Drivetrain	EN 05006	AA	Air Intake System	Intake funnel		$ 0.25	4	$ 0.02	$ 0.22	$ -	$ -	$ 0.99	78
48	Engine & Drivetrain	EN A0006	AA		Throttle Body		$ 130.67	1	$ 119.81	$ 8.96	$ 1.24	$ 0.67	$ 130.67	79
49	Engine & Drivetrain	EN 06001	AA	Throttle Body	Throttle Flange		$ 5.18	1	$ 0.73	$ 4.45	$ -	$ -	$ 5.18	81
50	Engine & Drivetrain	EN 06002	AA	Throttle Body	Restrictor		$ 5.73	1	$ 1.58	$ 4.15	$ -	$ -	$ 5.73	82
51	Engine & Drivetrain	EN 06003	AA	Throttle Body	Throttle Housing		$ 4.28	1	$ 0.85	$ 3.43	$ -	$ -	$ 4.28	83
52	Engine & Drivetrain	EN 06004	AA	Throttle Body	Throttle Axle		$ 2.73	1	$ 0.06	$ 2.67	$ -	$ -	$ 2.73	84
53	Engine & Drivetrain	EN 06005	AA	Throttle Body	TPS Axle		$ 2.71	1	$ 0.04	$ 2.67	$ -	$ -	$ 2.71	85
54	Engine & Drivetrain	EN 06006	AA	Throttle Body	Cable Housing		$ 1.59	1	$ 0.17	$ 1.42	$ -	$ -	$ 1.59	86
55	Engine & Drivetrain	EN 06007	AA	Throttle Body	Axle Stop		$ 2.04	1	$ 0.26	$ 1.78	$ -	$ -	$ 2.04	87
56	Engine & Drivetrain	EN 06008	AA	Throttle Body	Ram Pipe		$ 12.51	1	$ 4.01	$ 8.50	$ -	$ -	$ 12.51	88
57	Engine & Drivetrain	EN 06009	AA	Throttle Body	Throttle Plate		$ 1.49	1	$ 0.07	$ 1.42	$ -	$ -	$ 1.49	89
58	Engine & Drivetrain	EN 06010	AA	Throttle Body	Tabs		$ 0.82	2	$ 0.01	$ 0.81	$ -	$ -	$ 1.64	90

Line Num.	Area of Commodity	Asm/Prt #	Rev. Lvl.	Asm	Component	Description	Unit Cost	Quantity	Material Cost	Process Cost	Fastener Cost	Tooling Cost	Total Cost	Details Page Number
59	Engine & Drivetrain	EN 06011	AA	Throttle Body	Mount 1		$ 0.74	1	$ 0.04	$ 0.70	$ -	$ -	$ 0.74	92
60	Engine & Drivetrain	EN 06012	AA	Throttle Body	Mount 2		$ 0.75	1	$ 0.05	$ 0.70	$ -	$ -	$ 0.75	94
61	Engine & Drivetrain	EN 06013	AA	Throttle Body	Hose Clip		$ 1.76	2	$ 0.06	$ 1.70	$ -	$ -	$ 3.53	96
62	Engine & Drivetrain	EN A0007	AA		Overflow Bottles		$ 66.85	1	$ 57.02	$ 7.08	$ 2.75	$ -	$ 66.85	98
63	Engine & Drivetrain	EN A0008	AA		Cooling System		$ 48.35	1	$ 21.72	$ 17.08	$ 8.55	$ 1.00	$ 48.35	99
64	Engine & Drivetrain	EN 08001	AA	Colling System	Radiator		$ 32.02	1	$ 14.89	$ 17.13	$ -	$ -	$ 32.02	101
65	Engine & Drivetrain	EN 08002	AA	Colling System	Radiator lateral upper tab		$ 1.92	1	$ 0.07	$ 1.86	$ -	$ -	$ 1.92	102
66	Engine & Drivetrain	EN 08003	AA	Colling System	Radiator lateral lower tab		$ 2.59	1	$ 0.21	$ 2.38	$ -	$ -	$ 2.59	104
67	Engine & Drivetrain	EN 08004	AA	Colling System	Radiator back tab		$ 1.98	1	$ 0.04	$ 1.94	$ -	$ -	$ 1.98	106
68	Engine & Drivetrain	EN 08005	AA	Colling System	Main Coolant Line		$ 31.04	1	$ 12.26	$ 13.98	$ 4.80	$ -	$ 31.04	108
69	Engine & Drivetrain	EN 08006	AA	Colling System	Fan		$ 30.77	1	$ 30.00	$ 0.37	$ 0.40	$ -	$ 30.77	109
70	Engine & Drivetrain	EN 08007	AA	Colling System	Expansion Tank		$ 20.95	1	$ 0.85	$ 18.10	$ 2.00	$ -	$ 20.95	110
71	Engine & Drivetrain	EN 08008	AA	Colling System	Expansion Tank tab		$ 1.54	1	$ 0.02	$ 1.53	$ -	$ -	$ 1.54	112
72	Engine & Drivetrain	EN 08009	AA	Colling System	Lateral Tube		$ 1.63	1	$ 0.28	$ 1.35	$ -	$ -	$ 1.63	114
73	Engine & Drivetrain	EN 08010	AA	Colling System	Flow Rectifier		$ 42.36	1	$ 3.96	$ 38.40	$ -	$ -	$ 42.36	116
74	Engine & Drivetrain	EN 08011	AA	Colling System	Secondary Coolant Line		$ 15.48	1	$ 1.33	$ 9.36	$ 4.80	$ -	$ 15.48	117
75	Engine & Drivetrain	EN A0009	AA		Differential		$ 203.64	1	$ 180.31	$ 18.40	$ 2.27	$ 2.67	$ 203.64	118
76	Engine & Drivetrain	EN 09001	AA	Differential	Housing		$ 125.94	1	$ 21.41	$ 101.49	$ 3.03	$ -	$ 125.94	120
77	Engine & Drivetrain	EN 09002	AA	Differential	Right Bearing Carrier		$ 57.34	1	$ 15.31	$ 42.04	$ -	$ -	$ 57.34	121
78	Engine & Drivetrain	EN 09003	AA	Differential	Left Bearing Carrier		$ 58.01	1	$ 15.31	$ 42.70	$ -	$ -	$ 58.01	123
79	Engine & Drivetrain	EN 09004	AA	Differential	Upper Left Bearing Carrier Tab		$ 0.87	2	$ 0.13	$ 0.74	$ -	$ -	$ 1.74	125
80	Engine & Drivetrain	EN 09005	AA	Differential	Lower Left Bearing Carrier Tab		$ 0.87	2	$ 0.13	$ 0.74	$ -	$ -	$ 1.74	127
81	Engine & Drivetrain	EN 09006	AA	Differential	Upper Right Bearing Carrier Tab		$ 0.87	2	$ 0.13	$ 0.74	$ -	$ -	$ 1.74	128
82	Engine & Drivetrain	EN 09007	AA	Differential	Lower Left Bearing Carrier Tab		$ 0.87	2	$ 0.13	$ 0.74	$ -	$ -	$ 1.74	129
83	Engine & Drivetrain	EN 09008	AA	Differential	Right Eccentric		$ 7.80	1	$ 1.79	$ 6.01	$ -	$ -	$ 7.80	130
84	Engine & Drivetrain	EN 09009	AA	Differential	Left Eccentric		$ 8.97	1	$ 2.12	$ 6.86	$ -	$ -	$ 8.97	132
85	Engine & Drivetrain	EN A0010	AA		Driveshaft		$ 218.99	1	$ 200.00	$ 14.42	$ 4.57	$ -	$ 218.99	134
86	Engine & Drivetrain	EN 10001	AA	Driveshaft	Inboard tripod housing		$ 67.06	2	$ 9.52	$ 57.54	$ -	$ -	$ 134.11	135
87	Engine & Drivetrain	EN 10002	AA	Driveshaft	Outboard tripod housing		$ 58.04	2	$ 7.74	$ 50.30	$ -	$ -	$ 116.07	136
88	Engine & Drivetrain	EN 10003	AA	Driveshaft	Right axle		$ 27.12	1	$ 3.04	$ 24.08	$ -	$ -	$ 27.12	137
89	Engine & Drivetrain	EN 10004	AA	Driveshaft	Left axle		$ 27.30	1	$ 3.12	$ 24.19	$ -	$ -	$ 27.30	138
90	Engine & Drivetrain	EN A0011	AA		Chain Set		$ 23.29	1	$ 3.81	$ 17.26	$ 1.55	$ 0.67	$ 23.29	139
91	Engine & Drivetrain	EN 11001	AA	Chain Set	Front Sprocket		$ 23.42	1	$ 1.82	$ 21.60	$ -	$ -	$ 23.42	140
92	Engine & Drivetrain	EN 11002	AA	Chain Set	Rear Sprocket		$ 39.08	1	$ 3.06	$ 36.02	$ -	$ -	$ 39.08	141
93	Engine & Drivetrain	EN 11003	AA	Chain Set	Rear sprocket adapter		$ 29.16	1	$ 8.72	$ 20.44	$ -	$ -	$ 29.16	142
94	Engine & Drivetrain	EN 11004	AA	Chain Set	Chain Shield		$ 8.79	1	$ 2.85	$ 5.95	$ -	$ -	$ 8.79	144
95	Engine & Drivetrain	EN 11005	AA	Chain Set	Tabs		$ 1.01	2	$ 0.04	$ 0.97	$ -	$ -	$ 2.03	146
96	Engine & Drivetrain				Area Total				$ 2,846.53	$ 1,219.59	$ 50.94	$ 26.00	$ 4,143.06	
97	Frame & Body	FR A0001	AA		Frame		$ 512.50	1	$ 29.80	$ 402.87	$ -	$ 79.83	$ 512.50	149
98	Frame & Body	FR 01001	AA	Frame	Bend Round steel tubing		$ 21.35	1	$ 11.90	$ 9.45	$ -	$ -	$ 21.35	150
99	Frame & Body	FR 01002	AA	Frame	Straight round steel tubing		$ 248.23	1	$ 65.38	$ 182.85	$ -	$ -	$ 248.23	151
100	Frame & Body	FR 01003	AA	Frame	Anti-intrusion plate		$ 9.13	1	$ 4.03	$ 5.10	$ -	$ -	$ 9.13	152
101	Frame & Body	FR A0002	AA		Impact Attenuator		$ 11.52	1	$ -	$ 8.06	$ 3.45	$ -	$ 11.52	153
102	Frame & Body	FR 02001	AA	Impact Attenuator	Impact Attenuator		$ 35.19	1	$ 7.01	$ 28.19	$ -	$ -	$ 35.19	154
103	Frame & Body	FR A0003	AA		Pedal Assembly		$ 54.03	1	$ 3.12	$ 44.07	$ 4.18	$ 2.67	$ 54.03	155
104	Frame & Body	FR 03001	AA	Pedal Assembly	Balance Bar Adjusting Roller		$ 2.30	1	$ 0.19	$ 2.10	$ -	$ -	$ 2.30	158
105	Frame & Body	FR 03002	AA	Pedal Assembly	Balance Bar Head		$ 3.35	2	$ 0.21	$ 3.14	$ -	$ -	$ 6.70	160
106	Frame & Body	FR 03003	AA	Pedal Assembly	Brake Pedal		$ 5.38	1	$ 1.20	$ 4.19	$ -	$ -	$ 5.38	162
107	Frame & Body	FR 03004	AA	Pedal Assembly	Brake Pedal Support		$ 4.01	2	$ 0.42	$ 3.59	$ -	$ -	$ 8.03	164
108	Frame & Body	FR 03005	AA	Pedal Assembly	Brake Pedal Upper Axis		$ 3.71	1	$ 0.35	$ 3.36	$ -	$ -	$ 3.71	166
109	Frame & Body	FR 03006	AA	Pedal Assembly	Cladding Holding		$ 1.97	1	$ 0.03	$ 1.93	$ -	$ -	$ 1.97	168
110	Frame & Body	FR 03007	AA	Pedal Assembly	Connecting-Rod		$ 0.97	2	$ 0.04	$ 0.93	$ -	$ -	$ 1.94	170
111	Frame & Body	FR 03008	AA	Pedal Assembly	Foot Support		$ 2.99	2	$ 0.43	$ 2.55	$ -	$ -	$ 5.97	172
112	Frame & Body	FR 03009	AA	Pedal Assembly	Front Rails Mount		$ 0.75	4	$ 0.04	$ 0.71	$ -	$ -	$ 3.00	174
113	Frame & Body	FR 03010	AA	Pedal Assembly	Overtravel Switch Support		$ 3.09	1	$ 0.15	$ 2.94	$ -	$ -	$ 3.09	176
114	Frame & Body	FR 03011	AA	Pedal Assembly	Pedal Rail		$ 3.10	2	$ 0.84	$ 2.26	$ -	$ -	$ 6.19	178
115	Frame & Body	FR 03012	AA	Pedal Assembly	Platform Foot Support		$ 3.71	1	$ 0.93	$ 2.78	$ -	$ -	$ 3.71	180
116	Frame & Body	FR 03013	AA	Pedal Assembly	Rear Rails Mount		$ 0.75	4	$ 0.04	$ 0.71	$ -	$ -	$ 2.99	182
117	Frame & Body	FR 03014	AA	Pedal Assembly	Throttle Pedal		$ 8.15	1	$ 1.20	$ 6.95	$ -	$ -	$ 8.15	184
118	Frame & Body	FR 03015	AA	Pedal Assembly	Throttle Pedal Abutment		$ 1.97	1	$ 0.03	$ 1.94	$ -	$ -	$ 1.97	186
119	Frame & Body	FR 03016	AA	Pedal Assembly	Throttle Pedal Axis Cable		$ 2.00	1	$ 0.03	$ 1.97	$ -	$ -	$ 2.00	188
120	Frame & Body	FR 03017	AA	Pedal Assembly	Throttle Pedal Support		$ 4.11	2	$ 0.28	$ 3.83	$ -	$ -	$ 8.22	190
121	Frame & Body	FR A0004	AA		Undertray		$ 21.93	1	$ 0.12	$ 17.06	$ 1.08	$ 3.67	$ 21.93	192

Line Num.	Area of Commodity	Asm/Prt #	Rev. Lvl.	Asm	Component	Description	Unit Cost	Quantity	Material Cost	Process Cost	Fastener Cost	Tooling Cost	Total Cost	Details Page Number
122	Frame & Body	FR 04001	AA	Undertray	Front Undertray		$ 121.37	1	$ 49.43	$ 71.79	$ -	$ 0.15	$ 121.37	193
123	Frame & Body	FR 04002	AA	Undertray	Middle Undertray		$ 95.39	1	$ 36.74	$ 58.50	$ -	$ 0.15	$ 95.39	194
124	Frame & Body	FR 04003	AA	Undertray	Rear Undertray		$ 544.70	1	$ 274.88	$ 269.67	$ -	$ 0.15	$ 544.70	195
125	Frame & Body	FR 04004	AA	Undertray	Simple Pan Mounts		$ 0.92	4	$ 0.01	$ 0.91	$ -	$ -	$ 3.66	197
126	Frame & Body	FR 04005	AA	Undertray	Double Pan Mounts		$ 2.21	7	$ 0.04	$ 2.18	$ -	$ -	$ 15.50	199
127	Frame & Body	FR A0005	AA		Clutch Actuation System		$ 25.06	1	$ 22.00	$ 2.61	$ 0.12	$ 0.33	$ 25.06	201
128	Frame & Body	FR 05001	AA	Clutch Actuation System	Lever Handle		$ 0.98	1	$ 0.93	$ 0.05	$ -	$ -	$ 0.98	202
129	Frame & Body	FR 05002	AA	Clutch Actuation System	Handle padding		$ 7.40	1	$ 0.33	$ 0.40	$ -	$ 6.67	$ 7.40	204
130	Frame & Body	FR 05003	AA	Clutch Actuation System	Clutch mount		$ 1.60	1	$ 0.10	$ 1.50	$ -	$ -	$ 1.60	205
131	Frame & Body	FR 05004	AA	Clutch Actuation System	Lever joint		$ 11.77	1	$ 0.56	$ 4.54	$ -	$ 6.67	$ 11.77	207
132	Frame & Body	FR 05005	AA	Clutch Actuation System	Actuation Lever		$ 10.15	1	$ 0.63	$ 2.85	$ -	$ 6.67	$ 10.15	208
133	Frame & Body	FR A0006	AA		Shifter		$ 69.45	1	$ 42.48	$ 26.23	$ 0.41	$ 0.33	$ 69.45	209
134	Frame & Body	FR 06001	AA	Shifter	Engine gear box drum gear		$ 14.58	1	$ 2.43	$ 12.15	$ -	$ -	$ 14.58	211
135	Frame & Body	FR 06002	AA	Shifter	Engine gear box shifting pinion shaft		$ 17.64	1	$ 2.43	$ 15.21	$ -	$ -	$ 17.64	212
136	Frame & Body	FR 06003	AA	Shifter	Engine gear box actuator tab		$ 1.89	1	$ 0.05	$ 1.84	$ -	$ -	$ 1.89	213
137	Frame & Body	FR 06004	AA	Shifter	Front engine gearbox actuator mount		$ 2.83	1	$ 0.04	$ 2.79	$ -	$ -	$ 2.83	215
138	Frame & Body	FR 06005	AA	Shifter	Rear gearbox actuator mount		$ 2.65	1	$ 0.11	$ 2.54	$ -	$ -	$ 2.65	217
139	Frame & Body	FR 06006	AA	Shifter	Engine gearbox actuator coupling		$ 7.49	1	$ 0.40	$ 7.05	$ 0.04	$ -	$ 7.49	219
140	Frame & Body	FR A0007	AA		Body		$ 115.13	1	$ 0.07	$ 31.62	$ 78.77	$ 4.67	$ 115.13	220
141	Frame & Body	FR 07001	AA	Body	Body Front		$ 504.48	1	$ 301.45	$ 132.11	$ 66.24	$ 4.69	$ 504.48	221
142	Frame & Body	FR 07002	AA	Body	Body Right Inlet		$ 273.95	1	$ 179.24	$ 90.66	$ 1.26	$ 2.79	$ 273.95	222
143	Frame & Body	FR 07003	AA	Body	Body Left Inlet		$ 273.95	1	$ 179.24	$ 90.66	$ 1.26	$ 2.79	$ 273.95	223
144	Frame & Body	FR 07004	AA	Body	Body Plates		$ 317.22	2	$ 113.85	$ 136.87	$ 66.24	$ 0.26	$ 634.44	224
145	Frame & Body	FR 07005	AA	Body	Front Body and Top Body Inlet Mounts		$ 0.64	8	$ 0.05	$ 0.59	$ -	$ -	$ 5.09	225
146	Frame & Body	FR 07006	AA	Body	Bottom Body Inlet Mounts		$ 0.93	6	$ 0.04	$ 0.89	$ -	$ -	$ 5.58	227
147	Frame & Body				Area Total				$ 1,452.39	$ 1,891.50	$ 289.30	$ 122.72	$ 3,755.91	
148	Electrical	EL A0001	AA		Monitoring System		$ 91.55	1	$ 44.66	$ 45.62	$ 0.27	$ 1.00	$ 91.55	229
149	Electrical	EL 01001	AA	Monitoring System	Dashboard		$ 109.86	1	$ 79.43	$ 30.41	$ -	$ 0.02	$ 109.86	230
150	Electrical	EL 01002	AA	Monitoring System	Tabs for Dashboard		$ 0.90	3	$ 0.00	$ 0.90	$ -	$ -	$ 2.71	231
151	Electrical	EL A0002	AA		Battery Assembly		$ 89.81	1	$ 84.53	$ 4.43	$ 0.18	$ 0.67	$ 89.81	233
152	Electrical	EL 02001	AA	Battery Assembly	Main battery mount		$ 4.83	1	$ 0.97	$ 3.86	$ -	$ -	$ 4.83	234
153	Electrical	EL 02002	AA	Battery Assembly	Side battery mount		$ 3.66	2	$ 0.26	$ 3.40	$ -	$ -	$ 7.31	236
154	Electrical	EL 02003	AA	Battery Assembly	Front tab		$ 2.09	1	$ 0.04	$ 2.04	$ -	$ -	$ 2.09	238
155	Electrical	EL 02004	AA	Battery Assembly	Rear tab		$ 2.06	1	$ 0.02	$ 2.04	$ -	$ -	$ 2.06	240
156	Electrical	EL A0003	AA		Shifting System Wiring Harness		$ 43.69	1	$ 16.85	$ 26.84	$ -	$ -	$ 43.69	242
157	Electrical	EL 03001	AA	Shifting System Wiring Harness	Paddles connector mount		$ 1.88	1	$ 0.04	$ 1.84	$ -	$ -	$ 1.88	243
158	Electrical	EL A0004	AA		Rear Fire Wall Instruments and Wires		$ 1,239.59	1	$ 1,078.63	$ 157.25	$ 2.04	$ 1.67	$ 1,239.59	244
159	Electrical	EL 04001	AA	Rear Fire Wall Instruments and Wire	DTA Short tab		$ 0.94	2	$ 0.01	$ 0.93	$ -	$ -	$ 1.87	246
160	Electrical	EL 04002	AA	Rear Fire Wall Instruments and Wire	DTA Long tab		$ 2.33	1	$ 0.16	$ 2.18	$ -	$ -	$ 2.33	248
161	Electrical	EL 04003	AA	Rear Fire Wall Instruments and Wire	DTA Mount		$ 2.45	1	$ 0.36	$ 2.09	$ -	$ -	$ 2.45	250
162	Electrical	EL 04004	AA	Rear Fire Wall Instruments and Wire	Ground tab		$ 0.52	2	$ 0.01	$ 0.51	$ -	$ -	$ 1.05	252
163	Electrical	EL A0005	AA		Forward Fire Wall Wire Harness		$ 224.72	1	$ 136.55	$ 86.48	$ 0.69	$ 1.00	$ 224.72	254
164	Electrical	EL 05001	AA	Forward Fire Wall Wire Harness	Ground tab		$ 0.52	3	$ 0.01	$ 0.51	$ -	$ -	$ 1.57	256
165	Electrical				Area Total				$ 1,442.84	$ 378.99	$ 3.18	$ 4.35	$ 1,829.37	
166	Miscellaneous, Finish & Assembly	MS A0001	AA		Fire Wall		$ 43.37	1	$ 0.80	$ 32.65	$ 1.92	$ 8.00	$ 43.37	258
167	Miscellaneous, Finish & Assembly	MS 01001	AA	Fire Wall	Firewall main plate		$ 8.35	1	$ 3.91	$ 4.43	$ -	$ -	$ 8.35	259
168	Miscellaneous, Finish & Assembly	MS 01002	AA	Fire Wall	Firewall rear plate		$ 3.75	1	$ 0.94	$ 2.82	$ -	$ -	$ 3.75	261
169	Miscellaneous, Finish & Assembly	MS 01003	AA	Fire Wall	Firewall rear top middle plate		$ 3.32	1	$ 0.82	$ 2.50	$ -	$ -	$ 3.32	263
170	Miscellaneous, Finish & Assembly	MS 01004	AA	Fire Wall	Firewall rear top right plate		$ 2.18	1	$ 0.20	$ 1.99	$ -	$ -	$ 2.18	265
171	Miscellaneous, Finish & Assembly	MS 01005	AA	Fire Wall	Firewall rear top left plate		$ 2.18	1	$ 0.20	$ 1.99	$ -	$ -	$ 2.18	267
172	Miscellaneous, Finish & Assembly	MS 01006	AA	Fire Wall	Firewall top right plate		$ 4.07	1	$ 0.96	$ 3.11	$ -	$ -	$ 4.07	268
173	Miscellaneous, Finish & Assembly	MS 01007	AA	Fire Wall	Firewall top left plate		$ 4.07	1	$ 0.96	$ 3.11	$ -	$ -	$ 4.07	270
174	Miscellaneous, Finish & Assembly	MS 01008	AA	Fire Wall	Firewall middle right plate		$ 4.22	1	$ 1.13	$ 3.10	$ -	$ -	$ 4.22	272
175	Miscellaneous, Finish & Assembly	MS 01009	AA	Fire Wall	Firewall middle left plate		$ 4.22	1	$ 1.13	$ 3.10	$ -	$ -	$ 4.22	274
176	Miscellaneous, Finish & Assembly	MS 01010	AA	Fire Wall	Firewall bottom right plate		$ 4.35	1	$ 1.24	$ 3.12	$ -	$ -	$ 4.35	275
177	Miscellaneous, Finish & Assembly	MS 01011	AA	Fire Wall	Firewall bottom left plate		$ 4.35	1	$ 1.24	$ 3.12	$ -	$ -	$ 4.35	277
178	Miscellaneous, Finish & Assembly	MS 01012	AA	Fire Wall	Tab top		$ 1.00	2	$ 0.02	$ 0.98	$ -	$ -	$ 2.00	278
179	Miscellaneous, Finish & Assembly	MS 01013	AA	Fire Wall	Tab bottom		$ 1.03	2	$ 0.02	$ 1.01	$ -	$ -	$ 2.06	280
180	Miscellaneous, Finish & Assembly	MS 01014	AA	Fire Wall	Tab lateral		$ 0.33	20	$ 0.01	$ 0.31	$ -	$ -	$ 6.51	282
181	Miscellaneous, Finish & Assembly	MS A0002	AA		Safety		$ 0.62	1	$ -	$ 0.62	$ -	$ -	$ 0.62	284
182	Miscellaneous, Finish & Assembly	MS 02001	AA	Safety	Roll Bar Padding		$ 2.87	2	$ 0.05	$ 2.82	$ -	$ -	$ 5.74	285
183	Miscellaneous, Finish & Assembly	MS A0003	AA		Headrest		$ 55.51	1	$ 11.52	$ 42.30	$ 0.36	$ 1.33	$ 55.51	286
184	Miscellaneous, Finish & Assembly	MS 03001	AA	Headrest	Headrest back plate		$ 6.31	1	$ 2.23	$ 4.08	$ -	$ -	$ 6.31	287

Line Num.	Area of Commodity	Asm/Prt #	Rev. Lvl.	Asm	Component	Description	Unit Cost	Quantity	Material Cost	Process Cost	Fastener Cost	Tooling Cost	Total Cost	Details Page Number
185	Miscellaneous, Finish & Assembly	MS 03002	AA	Headrest	Upper tab		$ 1.07	2	$ 0.03	$ 1.04	$ -	$ -	$ 2.14	289
186	Miscellaneous, Finish & Assembly	MS 03003	AA	Headrest	Lower tab		$ 0.97	2	$ 0.02	$ 0.95	$ -	$ -	$ 1.94	291
187	Miscellaneous, Finish & Assembly	MS A0004	AA		Seat		$ 8.44	1	$ 0.15	$ 6.13	$ 0.83	$ 1.33	$ 8.44	292
188	Miscellaneous, Finish & Assembly	MS 04001	AA	Seat	Seat		$ 77.00	1	$ 75.60	$ 1.40	$ -	$ -	$ 77.00	294
189	Miscellaneous, Finish & Assembly	MS 04002	AA	Seat	Seat tab		$ 2.61	2	$ 0.50	$ 2.11	$ -	$ -	$ 5.21	295
190	Miscellaneous, Finish & Assembly	MS 04003	AA	Seat	Seat mount		$ 6.08	1	$ 2.07	$ 4.01	$ -	$ -	$ 6.08	297
191	Miscellaneous, Finish & Assembly	MS A0005	AA		Harness		$ 53.65	1	$ 45.06	$ 4.92	$ 3.00	$ 0.67	$ 53.65	298
192	Miscellaneous, Finish & Assembly	MS 05001	AA	Harness	Harness tab		$ 1.25	2	$ 0.09	$ 1.16	$ -	$ -	$ 2.49	299
193	Miscellaneous, Finish & Assembly				Area Total				$ 151.84	$ 154.87	$ 6.11	$ 11.33	$ 324.15	
194	Steering System	ST A0001	AA		Steering System		$ 64.55	1	$ 57.58	$ 6.00	$ 0.30	$ 0.67	$ 64.55	302
195	Steering System	ST 01001	AA	Steering System	First Column tube		$ 2.21	1	$ 0.91	$ 1.31	$ -	$ -	$ 2.21	303
196	Steering System	ST 01002	AA	Steering System	Spacer		$ 1.32	1	$ 0.01	$ 1.31	$ -	$ -	$ 1.32	305
197	Steering System	ST 01003	AA	Steering System	Steering mount		$ 18.94	1	$ 2.00	$ 16.94	$ -	$ -	$ 18.94	306
198	Steering System	ST 01004	AA	Steering System	Second Column tube		$ 5.49	1	$ 1.21	$ 4.28	$ -	$ -	$ 5.49	308
199	Steering System	ST A0002	AA		Steering Rack Assembly		$ 19.90	1	$ 9.17	$ 8.88	$ 1.17	$ 0.67	$ 19.90	310
200	Steering System	ST 02001	AA	Steering Rack Assembly	Rack		$ 18.04	1	$ 1.74	$ 16.30	$ -	$ -	$ 18.04	311
201	Steering System	ST 02002	AA	Steering Rack Assembly	Rack pinion		$ 10.98	1	$ 1.73	$ 9.25	$ -	$ -	$ 10.98	313
202	Steering System	ST 02003	AA	Steering Rack Assembly	Rack housing		$ 5.18	1	$ 1.26	$ 3.92	$ -	$ -	$ 5.18	314
203	Steering System	ST 02004	AA	Steering Rack Assembly	Lower Rack mount		$ 3.62	2	$ 0.97	$ 2.65	$ -	$ -	$ 7.24	315
204	Steering System	ST 02005	AA	Steering Rack Assembly	Upper Rack mount		$ 2.42	2	$ 0.23	$ 2.20	$ -	$ -	$ 4.85	317
205	Steering System	ST 02006	AA	Steering Rack Assembly	Rack stop		$ 1.26	2	$ 0.09	$ 1.17	$ -	$ -	$ 2.53	319
206	Steering System	ST 02007	AA	Steering Rack Assembly	Rack protection		$ 5.69	1	$ 2.10	$ 3.59	$ -	$ -	$ 5.69	321
207	Steering System	ST A0003	AA		Quick Release		$ 2.84	1	$ 1.24	$ 1.26	$ 0.18	$ 0.17	$ 2.84	323
208	Steering System	ST 03001	AA	Quick Release	Quick Release Steel Sleeve		$ 32.83	1	$ 1.08	$ 31.75	$ -	$ -	$ 32.83	324
209	Steering System	ST 03002	AA	Quick Release	Quick Release Fixed Part		$ 34.47	1	$ 2.48	$ 31.99	$ -	$ -	$ 34.47	325
210	Steering System	ST 03003	AA	Quick Release	Quick Release Sliding Part		$ 12.94	1	$ 1.77	$ 11.17	$ -	$ -	$ 12.94	326
211	Steering System	ST A0004	AA		Steering Wheel		$ 10.58	1	$ -	$ 9.75	$ 0.83	$ -	$ 10.58	327
212	Steering System	ST 04001	AA	Steering Wheel	Steering Wheel		$ 16.34	1	$ 3.78	$ 12.56	$ -	$ -	$ 16.34	328
213	Steering System	ST 04002	AA	Steering Wheel	Shift plates		$ 1.03	2	$ 0.14	$ 0.90	$ -	$ -	$ 2.07	329
214	Steering System	ST 04003	AA	Steering Wheel	Bottom shift plates mount		$ 2.30	2	$ 0.16	$ 2.14	$ -	$ -	$ 4.59	331
215	Steering System	ST 04004	AA	Steering Wheel	Shift plate mount		$ 1.93	2	$ 0.09	$ 1.85	$ -	$ -	$ 3.86	333
216	Steering System	ST 04005	AA	Steering Wheel	Shift plate sensor mount		$ 1.32	2	$ 0.01	$ 1.32	$ -	$ -	$ 2.65	335
217	Steering System	ST 04006	AA	Steering Wheel	Aluminium spacer		$ 3.07	1	$ 0.62	$ 2.45	$ -	$ -	$ 3.07	337
218	Steering System	ST A0005	AA		Tie Rod Assembly		$ 18.52	2	$ 5.32	$ 11.86	$ 0.68	$ 0.67	$ 37.03	339
219	Steering System	ST 05001	AA	Tie Rod Assembly	Tie Rod Insert		$ 1.19	4	$ 0.09	$ 1.10	$ -	$ -	$ 4.75	340
220	Steering System	ST 05002	AA	Tie Rod Assembly	Tube		$ 0.57	2	$ 0.35	$ 0.23	$ -	$ -	$ 1.14	341
221	Steering System				Area Total				$ 103.71	$ 225.71	$ 3.84	$ 2.83	$ 336.09	
222	Suspension System	SU A0001	AA		Lower Front A-Arm		$ 36.99	2	$ 21.25	$ 12.25	$ 0.83	$ 2.67	$ 73.98	343
223	Suspension System	SU 01001	AA	Lower Front A-Arm	Simple Bearing Support		$ 1.75	4	$ 0.08	$ 1.67	$ -	$ -	$ 7.01	344
224	Suspension System	SU 01002	AA	Lower Front A-Arm	Lower Front Bearing Support		$ 4.00	2	$ 0.31	$ 3.69	$ -	$ -	$ 8.01	346
225	Suspension System	SU 01003	AA	Lower Front A-Arm	Fore Lower Front A-Arm Tube		$ 2.62	2	$ 0.39	$ 2.23	$ -	$ -	$ 5.24	348
226	Suspension System	SU 01004	AA	Lower Front A-Arm	Aft Lower Front A-Arm Tube		$ 2.67	2	$ 0.43	$ 2.23	$ -	$ -	$ 5.33	350
227	Suspension System	SU 01005	AA	Lower Front A-Arm	Spacer on Frame Side		$ 0.20	8	$ 0.01	$ 0.20	$ -	$ -	$ 1.63	351
228	Suspension System	SU 01006	AA	Lower Front A-Arm	Spacer on Upright Side		$ 0.43	4	$ 0.02	$ 0.41	$ -	$ -	$ 1.73	353
229	Suspension System	SU 01007	AA	Lower Front A-Arm	Fore A Lower Front A-Arm Mount		$ 1.20	2	$ 0.13	$ 1.07	$ -	$ -	$ 2.40	355
230	Suspension System	SU 01008	AA	Lower Front A-Arm	Fore B Lower Front A-Arm Mount		$ 1.16	2	$ 0.10	$ 1.06	$ -	$ -	$ 2.31	356
231	Suspension System	SU 01009	AA	Lower Front A-Arm	Aft A Lower Front A-Arm Mount		$ 1.08	2	$ 0.07	$ 1.01	$ -	$ -	$ 2.15	357
232	Suspension System	SU 01010	AA	Lower Front A-Arm	Aft B Lower Front A-Arm Mount		$ 1.14	2	$ 0.09	$ 1.05	$ -	$ -	$ 2.27	358
233	Suspension System	SU A0002	AA		Upper Front A-Arm		$ 41.49	2	$ 21.21	$ 16.17	$ 0.78	$ 3.33	$ 82.98	359
234	Suspension System	SU 02001	AA	Upper Front A-Arm	Simple Bearing Support		$ 1.75	4	$ 0.08	$ 1.67	$ -	$ -	$ 7.01	360
235	Suspension System	SU 02002	AA	Upper Front A-Arm	Upper Front Bearing Support		$ 4.18	2	$ 0.76	$ 3.42	$ -	$ -	$ 8.36	361
236	Suspension System	SU 02003	AA	Upper Front A-Arm	Fore Upper Front A-Arm Tube		$ 2.47	2	$ 0.23	$ 2.23	$ -	$ -	$ 4.93	363
237	Suspension System	SU 02004	AA	Upper Front A-Arm	Aft Upper Front A-Arm Tube		$ 2.51	2	$ 0.27	$ 2.23	$ -	$ -	$ 5.01	364
238	Suspension System	SU 02005	AA	Upper Front A-Arm	Front Pull-Rod Mount		$ 0.83	4	$ 0.05	$ 0.77	$ -	$ -	$ 3.30	365
239	Suspension System	SU 02006	AA	Upper Front A-Arm	Spacer on Frame Side		$ 0.26	8	$ 0.01	$ 0.25	$ -	$ -	$ 2.06	367
240	Suspension System	SU 02007	AA	Upper Front A-Arm	Spacer on Upright Side		$ 0.50	4	$ 0.04	$ 0.46	$ -	$ -	$ 2.00	368
241	Suspension System	SU 02008	AA	Upper Front A-Arm	Fore A Upper Front A-Arm Mount		$ 1.10	2	$ 0.05	$ 1.05	$ -	$ -	$ 2.20	370
242	Suspension System	SU 02009	AA	Upper Front A-Arm	Fore B Upper Front A-Arm Mount		$ 1.12	2	$ 0.06	$ 1.06	$ -	$ -	$ 2.23	372
243	Suspension System	SU 02010	AA	Upper Front A-Arm	Aft A Upper Front A-Arm Mount		$ 1.03	2	$ 0.03	$ 1.00	$ -	$ -	$ 2.07	374
244	Suspension System	SU 02011	AA	Upper Front A-Arm	Aft B Upper Front A-Arm Mount		$ 1.08	2	$ 0.04	$ 1.04	$ -	$ -	$ 2.16	376
245	Suspension System	SU A0003	AA		Lower Rear A-Arm		$ 38.37	2	$ 21.20	$ 13.62	$ 0.88	$ 2.67	$ 76.73	378
246	Suspension System	SU 03001	AA	Lower Rear A-Arm	Simple Bearing Support		$ 1.75	4	$ 0.08	$ 1.67	$ -	$ -	$ 7.01	379
247	Suspension System	SU 03002	AA	Lower Rear A-Arm	Lower Rear Bearing Support		$ 3.45	2	$ 0.35	$ 3.10	$ -	$ -	$ 6.90	380

Line Num.	Area of Commodity	Asm/Prt #	Rev. Lvl.	Asm	Component	Description	Unit Cost	Quantity	Material Cost	Process Cost	Fastener Cost	Tooling Cost	Total Cost	Details Page Number
248	Suspension System	SU 03003	AA	Lower Rear A-Arm	Fore Lower Rear A-Arm Tube		$ 2.60	2	$ 0.36	$ 2.23	$ -	$ -	$ 5.19	382
249	Suspension System	SU 03004	AA	Lower Rear A-Arm	Aft Lower Rear A-Arm Tube		$ 2.46	2	$ 0.23	$ 2.23	$ -	$ -	$ 4.92	383
250	Suspension System	SU 03005	AA	Lower Rear A-Arm	Spacer on Frame Side		$ 0.20	8	$ 0.01	$ 0.20	$ -	$ -	$ 1.63	384
251	Suspension System	SU 03006	AA	Lower Rear A-Arm	Spacer on Upright Side		$ 0.43	4	$ 0.02	$ 0.41	$ -	$ -	$ 1.73	385
252	Suspension System	SU 03007	AA	Lower Rear A-Arm	Fore A Lower Rear A-Arm Mount		$ 1.15	2	$ 0.09	$ 1.06	$ -	$ -	$ 2.31	386
253	Suspension System	SU 03008	AA	Lower Rear A-Arm	Fore B Lower Rear A-Arm Mount		$ 1.16	2	$ 0.10	$ 1.06	$ -	$ -	$ 2.33	387
254	Suspension System	SU 03009	AA	Lower Rear A-Arm	Aft A Lower Rear A-Arm Mount		$ 1.62	2	$ 0.26	$ 1.36	$ -	$ -	$ 3.24	388
255	Suspension System	SU 03010	AA	Lower Rear A-Arm	Aft B Lower Rear A-Arm Mount		$ 1.71	2	$ 0.33	$ 1.38	$ -	$ -	$ 3.43	389
256	Suspension System	SU A0004	AA		Upper Rear A-Arm		$ 41.36	2	$ 21.20	$ 16.04	$ 0.78	$ 3.33	$ 82.72	390
257	Suspension System	SU 04001	AA	Upper Rear A-Arm	Simple Bearing Support		$ 1.75	4	$ 0.08	$ 1.67	$ -	$ -	$ 7.01	391
258	Suspension System	SU 04002	AA	Upper Rear A-Arm	Upper Rear Bearing Support		$ 3.82	2	$ 0.62	$ 3.20	$ -	$ -	$ 7.64	392
259	Suspension System	SU 04003	AA	Upper Rear A-Arm	Fore Upper Rear A-Arm Tube		$ 2.55	2	$ 0.32	$ 2.23	$ -	$ -	$ 5.11	394
260	Suspension System	SU 04004	AA	Upper Rear A-Arm	Aft Upper Rear A-Arm Tube		$ 2.41	2	$ 0.18	$ 2.23	$ -	$ -	$ 4.82	395
261	Suspension System	SU 04005	AA	Upper Rear A-Arm	Rear Pull-Rod Mount		$ 0.78	4	$ 0.05	$ 0.73	$ -	$ -	$ 3.12	396
262	Suspension System	SU 04006	AA	Upper Rear A-Arm	Spacer on Frame Side		$ 0.20	8	$ 0.01	$ 0.20	$ -	$ -	$ 1.63	398
263	Suspension System	SU 04007	AA	Upper Rear A-Arm	Spacer on Upright Side		$ 0.50	4	$ 0.04	$ 0.46	$ -	$ -	$ 2.00	399
264	Suspension System	SU 04008	AA	Upper Rear A-Arm	Fore A Upper Rear A-Arm Mount		$ 1.04	2	$ 0.04	$ 1.01	$ -	$ -	$ 2.09	400
265	Suspension System	SU 04009	AA	Upper Rear A-Arm	Fore B Upper Rear A-Arm Mount		$ 1.20	2	$ 0.07	$ 1.13	$ -	$ -	$ 2.39	402
266	Suspension System	SU 04010	AA	Upper Rear A-Arm	Aft A Upper Rear A-Arm Mount		$ 1.13	2	$ 0.05	$ 1.08	$ -	$ -	$ 2.26	404
267	Suspension System	SU 04011	AA	Upper Rear A-Arm	Aft B Upper Rear A-Arm Mount		$ 1.20	2	$ 0.06	$ 1.14	$ -	$ -	$ 2.40	406
268	Suspension System	SU A0005	AA		Front Suspension		$ 316.57	2	$ 310.07	$ 5.24	$ 0.60	$ 0.67	$ 633.15	408
269	Suspension System	SU 05001	AA	Front Suspension	Front Suspension mount		$ 8.11	2	$ 0.93	$ 7.18	$ -	$ -	$ 16.23	409
270	Suspension System	SU 05002	AA	Front Suspension	Shock eyelet bushing		$ 1.38	2	$ 0.02	$ 1.36	$ -	$ -	$ 2.77	411
271	Suspension System	SU 05003	AA	Front Suspension	End eyelet bushing		$ 1.38	2	$ 0.02	$ 1.35	$ -	$ -	$ 2.75	412
272	Suspension System	SU A0006	AA		Front Rocker		$ 21.48	2	$ 5.63	$ 14.12	$ 1.06	$ 0.67	$ 42.95	413
273	Suspension System	SU 06001	AA	Front Rocker	Sheets of metal of the rocker		$ 2.08	4	$ 0.33	$ 1.75	$ -	$ -	$ 8.32	414
274	Suspension System	SU 06002	AA	Front Rocker	Front Rocker mount		$ 3.30	2	$ 0.44	$ 2.86	$ -	$ -	$ 6.60	416
275	Suspension System	SU 06003	AA	Front Rocker	Rocker bushing		$ 1.68	4	$ 0.04	$ 1.64	$ -	$ -	$ 6.72	418
276	Suspension System	SU 06004	AA	Front Rocker	Rocker spacer		$ 0.25	4	$ 0.01	$ 0.24	$ -	$ -	$ 0.99	419
277	Suspension System	SU 06005	AA	Front Rocker	Front A-Arm insert spacer		$ 0.28	4	$ 0.01	$ 0.28	$ -	$ -	$ 1.14	420
278	Suspension System	SU 06006	AA	Front Rocker	Tierod tube		$ 0.53	2	$ 0.31	$ 0.23	$ -	$ -	$ 1.06	421
279	Suspension System	SU 06007	AA	Front Rocker	Tierod insert		$ 1.68	4	$ 0.09	$ 1.59	$ -	$ -	$ 6.70	422
280	Suspension System	SU A0007	AA		Rear Suspension		$ 316.84	2	$ 310.08	$ 5.50	$ 0.60	$ 0.67	$ 633.69	424
281	Suspension System	SU 07001	AA	Rear Suspension	Rear Suspension mount		$ 8.87	2	$ 1.01	$ 7.86	$ -	$ -	$ 17.74	425
282	Suspension System	SU 07002	AA	Rear Suspension	Shock eyelet bushing		$ 1.38	2	$ 0.02	$ 1.36	$ -	$ -	$ 2.77	427
283	Suspension System	SU 07003	AA	Rear Suspension	End eyelet bushing		$ 1.38	2	$ 0.02	$ 1.35	$ -	$ -	$ 2.75	428
284	Suspension System	SU A0008	AA		Rear Rocker		$ 21.25	2	$ 5.58	$ 13.94	$ 1.06	$ 0.67	$ 42.50	429
285	Suspension System	SU 08001	AA	Rear Rocker	Sheets of metal of the rocker		$ 1.49	4	$ 0.15	$ 1.34	$ -	$ -	$ 5.96	430
286	Suspension System	SU 08002	AA	Rear Rocker	Rear Rocker mount		$ 3.94	2	$ 0.44	$ 3.51	$ -	$ -	$ 7.89	432
287	Suspension System	SU 08003	AA	Rear Rocker	Rocker bushing		$ 1.68	4	$ 0.04	$ 1.64	$ -	$ -	$ 6.72	433
288	Suspension System	SU 08004	AA	Rear Rocker	Rocker spacer		$ 0.25	4	$ 0.01	$ 0.24	$ -	$ -	$ 0.99	435
289	Suspension System	SU 08005	AA	Rear Rocker	Rear A-Arm insert spacer		$ 0.28	4	$ 0.01	$ 0.28	$ -	$ -	$ 1.14	436
290	Suspension System	SU 08006	AA	Rear Rocker	Tierod tube		$ 0.39	2	$ 0.17	$ 0.23	$ -	$ -	$ 0.79	437
291	Suspension System	SU 08007	AA	Rear Rocker	Tierod insert		$ 1.68	4	$ 0.09	$ 1.59	$ -	$ -	$ 6.70	438
292	Suspension System	SU A0009	AA		Rear Tie-Rod		$ 18.39	2	$ 5.23	$ 11.81	$ 0.68	$ 0.67	$ 36.77	439
293	Suspension System	SU 09001	AA	Rear Tie-Rod	Tie Rod insert		$ 1.68	4	$ 0.09	$ 1.59	$ -	$ -	$ 6.70	440
294	Suspension System	SU 09002	AA	Rear Tie-Rod	Tube		$ 0.46	2	$ 0.24	$ 0.23	$ -	$ -	$ 0.92	441
295	Suspension System	SU A0010	AA		Front Upright Assembly		$ 21.15	2	$ -	$ 18.85	$ 2.30	$ -	$ 42.29	442
296	Suspension System	SU 10001	AA	Front Upright Assembly	Front upright		$ 34.40	2	$ 8.54	$ 25.86	$ -	$ -	$ 68.80	443
297	Suspension System	SU 10002	AA	Front Upright Assembly	Steering tab		$ 3.67	2	$ 0.75	$ 2.93	$ -	$ -	$ 7.34	445
298	Suspension System	SU 10003	AA	Front Upright Assembly	Caliper tab		$ 7.10	2	$ 2.33	$ 4.77	$ -	$ -	$ 14.20	447
299	Suspension System	SU 10004	AA	Front Upright Assembly	Upper A-arm tab		$ 6.90	2	$ 1.25	$ 5.65	$ -	$ -	$ 13.80	449
300	Suspension System	SU 10005	AA	Front Upright Assembly	Lower A-arm tab		$ 8.85	2	$ 2.00	$ 6.84	$ -	$ -	$ 17.70	451
301	Suspension System	SU 10006	AA	Front Upright Assembly	Camber adjustment shim		$ 0.91	2	$ 0.21	$ 0.70	$ -	$ -	$ 1.82	453
302	Suspension System	SU 10007	AA	Front Upright Assembly	Speed sensor front mount		$ 1.01	2	$ 0.02	$ 0.99	$ -	$ -	$ 2.03	455
303	Suspension System	SU A0011	AA		Rear Upright Assembly		$ 20.92	2	$ -	$ 18.59	$ 2.33	$ -	$ 41.83	457
304	Suspension System	SU 11001	AA	Rear Upright Assembly	Rear upright		$ 30.35	2	$ 8.71	$ 21.64	$ -	$ -	$ 60.70	458
305	Suspension System	SU 11002	AA	Rear Upright Assembly	Caliper tab		$ 6.49	2	$ 1.81	$ 4.68	$ -	$ -	$ 12.99	460
306	Suspension System	SU 11003	AA	Rear Upright Assembly	Upper A-arm tab		$ 6.34	2	$ 1.23	$ 5.11	$ -	$ -	$ 12.69	462
307	Suspension System	SU 11004	AA	Rear Upright Assembly	Lower A-arm tab		$ 10.10	2	$ 2.51	$ 7.59	$ -	$ -	$ 20.20	464
308	Suspension System	SU 11005	AA	Rear Upright Assembly	Camber adjustment shim		$ 0.93	2	$ 0.23	$ 0.70	$ -	$ -	$ 1.86	466
309	Suspension System	SU 11006	AA	Rear Upright Assembly	Speed sensor rear mount		$ 1.25	2	$ 0.02	$ 1.23	$ -	$ -	$ 2.50	468
310	Suspension System				Area Total				$ 1,527.30	$ 717.42	$ 23.78	$ 30.67	$ 2,299.17	

Line Num.	Area of Commodity	Asm/Prt #	Rev. Lvl.	Asm	Component	Description	Unit Cost	Quantity	Material Cost	Process Cost	Fastener Cost	Tooling Cost	Total Cost	Details Page Number
311	Wheels, Wheel Bearings and Tires	WT A0001	AA		Wheel Assembly		$ 175.23	4	$ 170.00	$ 3.63	$ 1.60	$ -	$ 700.92	470
312	Wheels, Wheel Bearings and Tires	WT A0002	AA		Front Hubs		$ 245.33	2	$ 239.26	$ 1.81	$ 4.26	$ -	$ 490.66	471
313	Wheels, Wheel Bearings and Tires	WT 02001	AA	Front Hubs	Front Hub		$ 56.49	2	$ 13.83	$ 42.65	$ -	$ -	$ 112.97	472
314	Wheels, Wheel Bearings and Tires	WT 02002	AA	Front Hubs	Front speed wheel		$ 2.62	2	$ 0.35	$ 2.27	$ -	$ -	$ 5.25	474
315	Wheels, Wheel Bearings and Tires	WT 02003	AA	Front Hubs	Speed wheel spacer		$ 1.90	2	$ 0.15	$ 1.75	$ -	$ -	$ 3.79	476
316	Wheels, Wheel Bearings and Tires	WT A0003	AA		Rear Hubs		$ 245.33	2	$ 239.26	$ 1.81	$ 4.26	$ -	$ 490.66	478
317	Wheels, Wheel Bearings and Tires	WT 03001	AA	Rear Hubs	Rear Hub		$ 57.94	2	$ 14.14	$ 43.81	$ -	$ -	$ 115.89	479
318	Wheels, Wheel Bearings and Tires	WT 03002	AA	Rear Hubs	Rear speed wheel		$ 2.23	2	$ 0.23	$ 2.00	$ -	$ -	$ 4.46	481
319	Wheels, Wheel Bearings and Tires	WT 03003	AA	Rear Hubs	Speed wheel spacer		$ 1.90	2	$ 0.15	$ 1.75	$ -	$ -	$ 3.79	483
320	Wheels, Wheel Bearings and Tires				Area Total				$ 1,694.71	$ 210.23	$ 23.45	$ -	$ 1,928.39	
	Vehicle Total				Total				**$ 10,158.74**	**$ 4,925.09**	**$ 406.33**	**$ 198.24**	**$ 15,688.41**	

Ecurie Piston Sport Auto

ÉCOLE CENTRALE LYON

CAR #81

BRAKE SYSTEM

University	Ecole Centrale de Lyon	Back to BOM	**Car #**	81	**Asm Cost** $ 110.61
System	Brake System				**Qty** 2
Assembly	Front Brake Rotor		**FileLink1**		
P/N Base	BR A0001		**FileLink2**		**Extended Cost** $ 221.22
Suffix	AA		**FileLink3**		
Details	Front Brake Rotor assembly				

ItemOrder	Part	Part Cost	Quantity	Sub Total
10	Brake Rotor	$ 4.06	1	$ 4.06
20	Brake Shrink Disc	$ 7.37	1	$ 7.37
30	Brake Rotor Button	$ 1.39	6	$ 8.36
40	Caliper Spacer	$ 0.44	2	$ 0.87
			Sub Total	**$ 20.67**

ItemOrder	Material	Use	UnitCost	Size1	Unit1	Size2	Unit2	Area Name	Area	Length	Density	Quantity	Sub Total
10	Brake Caliper, Beringer, 2D1	Brake Caliper	$ 83.00		unit							1	$ 83.00
20	Brake Pad, Iron or Steel Rotor	Brake Pad	$ 0.0002	4800	mm^3			Rectangular area, 40x40 mm	1,600	3.00		2	$ 1.92
												Sub Total	**$ 84.92**

ItemOrder	Process	Use	UnitCost	Unit	Quantity	Multiplier	Mult. Val.	Sub Total
10	Assemble,1kg, Line on Line	Line up Pads	$ 0.13	Unit	2			$ 0.25
20	Assemble,1kg, Loose	Insert buttons and washers	$ 0.06	Unit	6			$ 0.36
30	Assemble,1kg, Line on Line	Insert Retaining rings	$ 0.13	Unit	6			$ 0.78
40	Assemble,1kg, Line on Line	Assemble Brake Rotor and Shrink Disc	$ 0.13	Unit	1			$ 0.13
50	Assemble,1kg, Line on Line	Assemble Brake Rotor onto Hub	$ 0.13	Unit	1			$ 0.13
60	Assemble, 1 kg, Loose	Put caliper in place	$ 0.06	Unit	1			$ 0.06
70	Ratchet <= 25.4 mm	Bolt Caliper to Upright	$ 0.75	Unit	2			$ 1.50
80	Safety Wire Install	For caliper bolts locking device	$ 0.60	Unit	2			$ 1.20
							Sub Total	**$ 4.41**

ItemOrder	Fastener	Use	UnitCost	Size1	Unit1	Size2	Unit2	Quantity	Sub Total
10	Bolt, Grade 8.8 (SAE 5)	Calipers in Uprights	$ 0.10	8	mm	25	mm	2	$ 0.20
20	Washer, Grade 8.8 (SAE 5)	Calipers in Uprights	$ 0.01	8	mm			4	$ 0.04
30	Retaining Ring, External	Assemble Brake Rotor and Shrink Disc	$ 0.04	12	mm			6	$ 0.25
40	Washer, Grade 8.8 (SAE 5)	Assemble Brake Rotor and Shrink Disc	$ 0.01	12	mm			12	$ 0.12
								Sub Total	**$ 0.61**

University	Ecole Centrale de Lyon		Back to BOM	**Car #**	81	**Part Cost**	$ 4.06
System	Brake System	**FileLink1**				**Qty**	1
Assembly	Front Brake Rotor	**FileLink2**		**FileLink1**			
Part	Brake Rotor	**FileLink3**		**FileLink2**		**Extended Cost**	$ 4.06
P/N Base	BR 01001			**FileLink3**			
Suffix	AA						
Details	Bought, cost as made						

ItemOrder	Material	Use	UnitCost	Size1	Unit1	Size2	Unit2	Area Name	Area	Length	Density	Quantity	Sub Total
10	Cast Iron (per kg)	Stock material for brake rotor	$ 1.00	1.468	kg			Circle area, 230mm diameter	4.15E-02	4.50E-03	7850	1	$ 1.47
												Sub Total	**$ 1.47**

ItemOrder	Process	Use	UnitCost	Unit	Quantity	Multiplier	Mult. Val.	Sub Total
10	Machining Setup, Install and remove	Setup for laser cut	$ 1.30	Unit	1		1	$ 1.30
20	Laser cut	Cutout shape	$ 0.01	cm	51.84	Material - Cast iron	2.5	$ 1.30
							1	**$ 2.60**

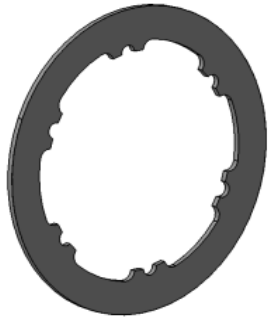

University	Ecole Centrale de Lyon			Back to BOM	**Car #**	81	**Part Cost**	$	7.37
System	Brake System	Drawing :	FileLink1				**Qty**		1
Assembly	Front Brake Rotor		**FileLink2**		**FileLink1**				
Part	Brake Shrink Disc		**FileLink3**		**FileLink2**		**Extended Cost**	$	7.37
P/N Base	BR 01002				**FileLink3**				
Suffix	AA								
Details	Allows brake rotor to be mounted floating								

ItemOrder	Material	Use	UnitCost	Size1	Unit1	Size2	Unit2	Area Name	Area	Length	Density	Quantity	Sub Total
10	Steel, Mild	Stock material for brake rotor	$ 2.25	0.839	kg			Circle area, 165mm diameter	2.14E-02	0.005	7850	1	$ 1.89
												Sub Total	**$ 1.89**

ItemOrder	Process	Use	UnitCost	Unit	Quantity	Multiplier	Mult. Val.	Sub Total
10	Machining Setup, Install and remove	Setup for laser cut	$ 1.30	Unit	1		1	$ 1.30
20	Laser cut	Cutout shape	$ 0.01	cm	139.30	Material - Steel	3	$ 4.18
							1	**$ 5.48**

BR 01002

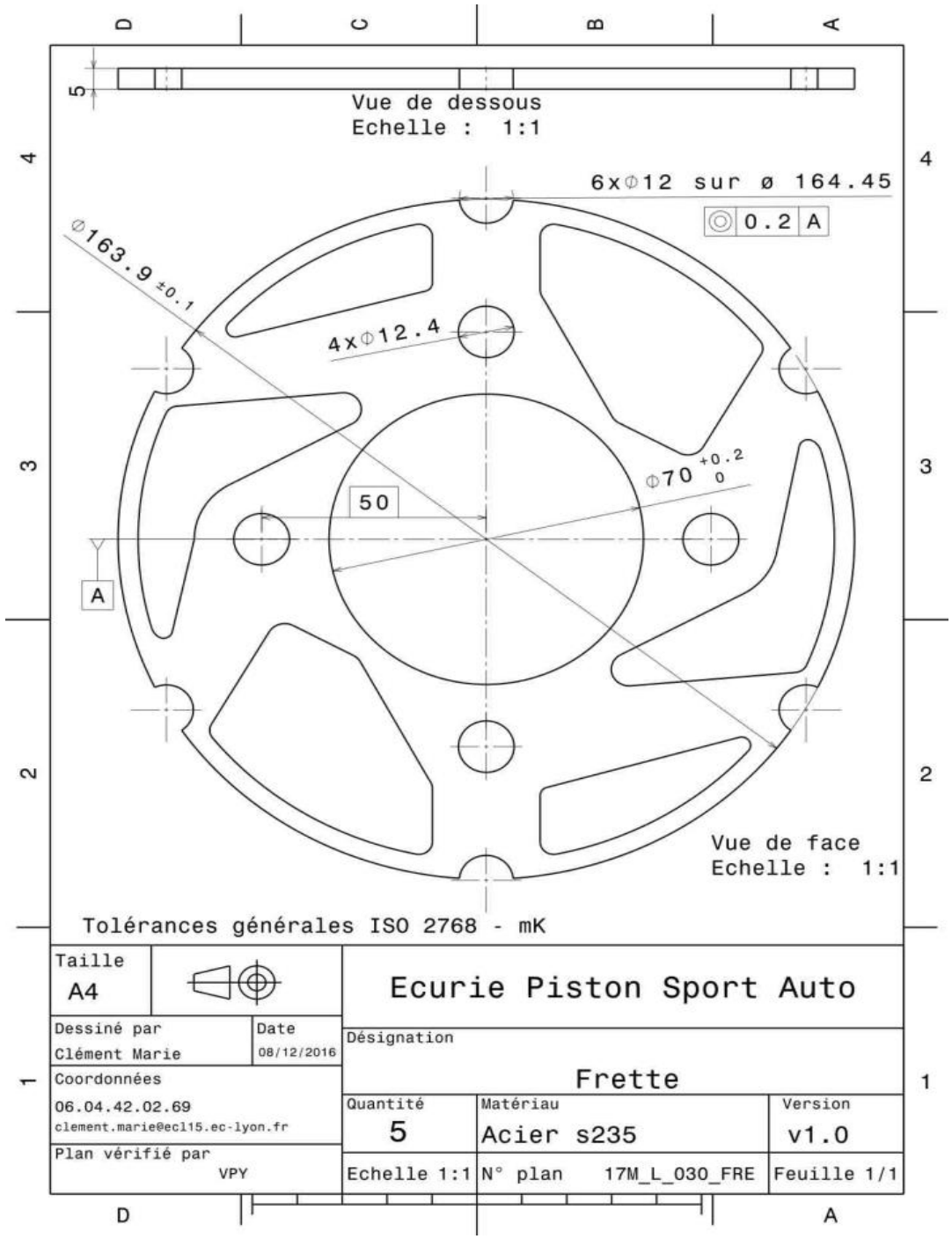
Vue de dessous
Echelle : 1:1
5
6xΦ12 sur ø 164.45
0.2 A
Ø163.9 ±0.1
4xΦ12.4
Φ70 +0.2 0
50
A
Vue de face
Echelle : 1:1
Tolérances générales ISO 2768 - mK
Taille
A4
Ecurie Piston Sport Auto
Dessiné par
Clément Marie
Date
08/12/2016
Désignation
Frette
Coordonnées
06.04.42.02.69
clement.marie@ecl15.ec-lyon.fr
Quantité
5
Matériau
Acier s235
Version
v1.0
Plan vérifié par
VPY
Echelle 1:1
N° plan 17M_L_030_FRE
Feuille 1/1

University	Ecole Centrale de Lyon		Back to BOM	**Car #**	81	**Part Cost**	$ 1.39
System	Brake System	**FileLink1**				**Qty**	6
Assembly	Front Brake Rotor	**FileLink2**		**FileLink1**			
Part	Brake Rotor Button	**FileLink3**		**FileLink2**		**Extended Cost**	$ 8.36
P/N Base	BR 01003			**FileLink3**			
Suffix	AA						
Details	Buttons between brake rotor and brake shrink disc						

ItemOrder	Material	Use	UnitCost	Size1	Unit1	Size2	Unit2	Area Name	Area	Length	Density	Quantity	Sub Total
10	Steel, Mild	Material for part	$ 2.25	0.007	kg			Circle area, 12mm diameter	1.13E-04	0.008	7850	1	$ 0.02
												Sub Total	**$ 0.02**

ItemOrder	Process	Use	UnitCost	Unit	Quantity	Multiplier	Mult. Val.	Sub Total
10	Machining Setup, Install and remove	Setup for machining	$ 1.30	Unit	1		1	$ 1.30
20	Machining		$ 0.04	cm^3	0.65	Material - Steel	3	$ 0.08
							Sub Total	**$ 1.38**

University	Ecole Centrale de Lyon		Back to BOM	**Car #**	81	**Part Cost**	$ 0.44
System	Brake System	Drawing :	FileLink1			**Qty**	2
Assembly	Front Brake Rotor		**FileLink2**	**FileLink1**			
Part	Caliper Spacer		**FileLink3**	**FileLink2**		**Extended Cost**	$ 0.87
P/N Base	BR 01004			**FileLink3**			
Suffix	AA						
Details	Spacer between caliper and caliper mount						

ItemOrder	Material	Use	UnitCost	Size1	Unit1	Size2	Unit2	Area Name	Area	Length	Density	Quantity	Sub Total
10	Steel, Mild	Stock material for caliper spacer	$ 2.25	0.014	kg			Circle area, 16mm diameter	2.01E-04	0.009	7850	1	$ 0.03
												Sub Total	**$ 0.03**

ItemOrder	Process	Use	UnitCost	Unit	Quantity	Multiplier	Mult. Val.	Sub Total
10	Machining Setup, Install and remove	Setup for laser cut	$ 1.30	Unit	1	4 parts cut from a single machine setup	0.25	$ 0.33
20	Laser cut	Cutout shape	$ 0.01	cm	2.64	Material - Steel	3	$ 0.08
							Sub Total	**$ 0.40**

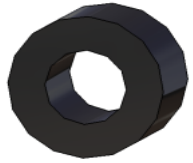

BR 01004

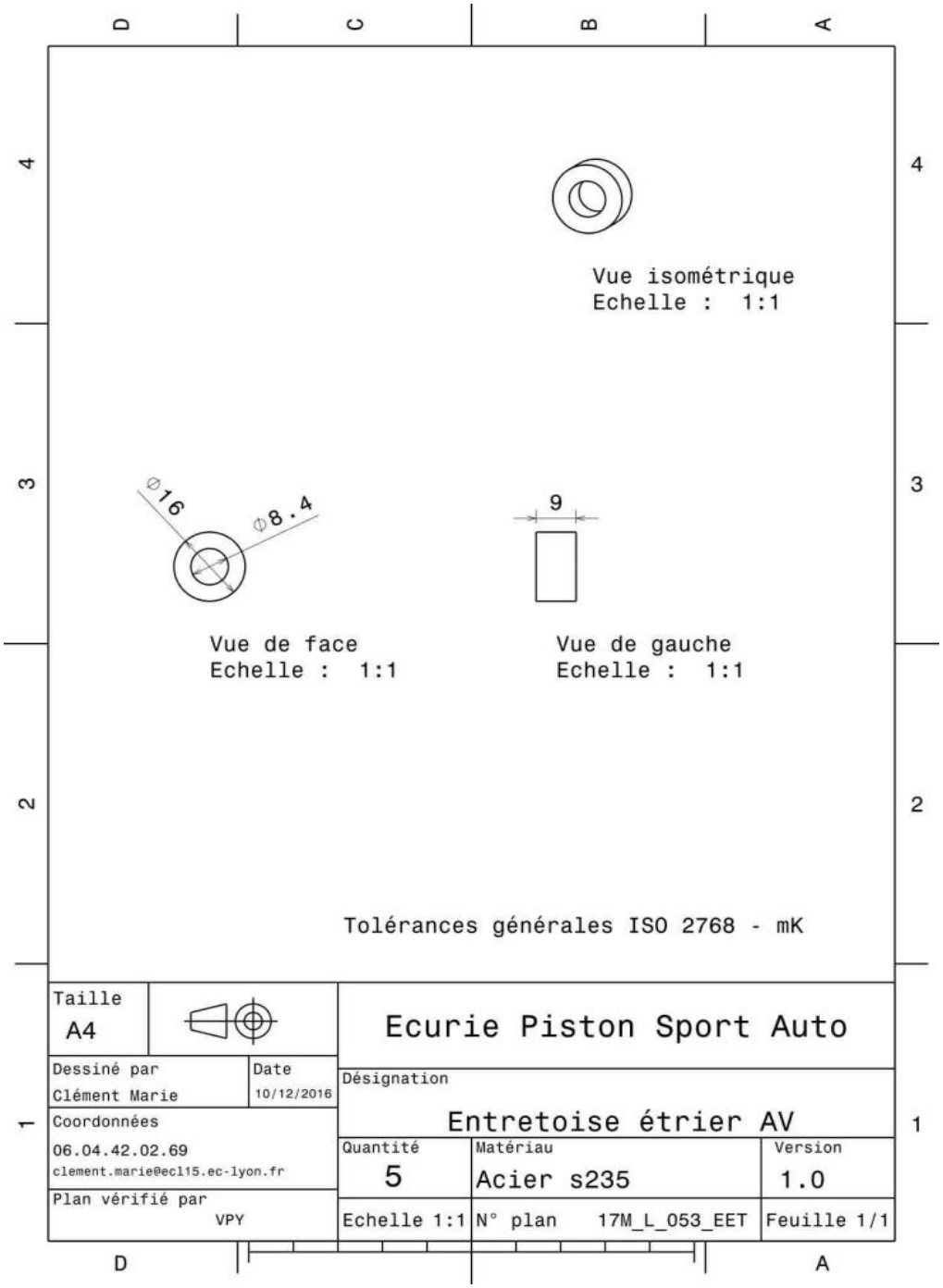
Vue isométrique
Echelle : 1:1
⌀16
⌀8.4
Vue de face
Echelle : 1:1
9
Vue de gauche
Echelle : 1:1
Tolérances générales ISO 2768 - mK
Taille
A4
Ecurie Piston Sport Auto
Dessiné par
Clément Marie
Date
10/12/2016
Désignation
Entretoise étrier AV
Coordonnées
06.04.42.02.69
clement.marie@ecl15.ec-lyon.fr
Quantité
5
Matériau
Acier s235
Version
1.0
Plan vérifié par
VPY
Echelle 1:1
N° plan 17M_L_053_EET
Feuille 1/1

University	Ecole Centrale de Lyon	Back to BOM	**Car #**	81	**Asm Cost** $ 109.07
System	Brake System				**Qty** 2
Assembly	Rear Brake Rotor		**FileLink1**		
P/N Base	BR A0002		**FileLink2**		**Extended Cost** $ 218.13
Suffix	AA		**FileLink3**		
Details	Rear Brake Rotor assembly				

ItemOrder	Part	Part Cost	Quantity	Sub Total
10	Brake Rotor	$ 4.06	1	$ 4.06
20	Brake Shrink Disc	$ 7.37	1	$ 7.37
30	Brake Rotor Button	$ 1.39	6	$ 8.36
			Sub Total	**$ 19.79**

ItemOrder	Material	Use	UnitCost	Size1	Unit1	Size2	Unit2	Area Name	Area	Length	Density	Quantity	Sub Total
10	Brake Caliper, Beringer, 2D1	Brake Caliper (in reality Beringer 2P1A is used)	$ 83.00		unit							1	$ 83.00
20	Brake Pad, Iron or Steel Rotor	Brake Pad	$ 0.0002	4800	mm^3			Rectangular area, 40x40 mm	1,600	3.00		2	$ 1.92
												Sub Total	**$ 84.92**

ItemOrder	Process	Use	UnitCost	Unit	Quantity	Multiplier	Mult. Val.	Sub Total
10	Assemble,1kg, Line on Line	Line up Pads	$ 0.13	Unit	2			$ 0.25
20	Assemble,1kg, Loose	Insert buttons and washers	$ 0.06	Unit	6			$ 0.36
30	Assemble,1kg, Line on Line	Insert Retaining rings	$ 0.13	Unit	6			$ 0.78
40	Assemble,1kg, Line on Line	Assemble Brake Rotor and Shrink Disc	$ 0.13	Unit	1			$ 0.13
50	Assemble,1kg, Line on Line	Assemble Brake Rotor onto Hub	$ 0.13	Unit	1			$ 0.13
60	Assemble, 1 kg, Loose	Put caliper in place	$ 0.06	Unit	1			$ 0.06
70	Ratchet <= 25.4 mm	Bolt Caliper to Upright	$ 0.75	Unit	2			$ 1.50
80	Reaction tool <= 25.4 mm	Bolt Caliper to Upright	$ 0.25	Unit	2			$ 0.50
							Sub Total	**$ 3.71**

ItemOrder	Fastener	Use	UnitCost	Size1	Unit1	Size2	Unit2	Quantity	Sub Total
10	Bolt, Grade 8.8 (SAE 5)	Calipers in Uprights	$ 0.07	8	mm	16	mm	2	$ 0.14
20	Nut, Grade 8.8 (SAE 5)	Calipers in Uprights	$ 0.04	8	mm			2	$ 0.09
30	Washer, Grade 8.8 (SAE 5)	Calipers in Uprights	$ 0.01	8	mm			4	$ 0.04
40	Retaining Ring, External	Assemble Brake Rotor and Shrink Disc	$ 0.04	12	mm			6	$ 0.25
50	Washer, Grade 8.8 (SAE 5)	Assemble Brake Rotor and Shrink Disc	$ 0.01	12	mm			12	$ 0.12
								Sub Total	**$ 0.64**

University	Ecole Centrale de Lyon		Back to BOM	**Car #**	81	**Part Cost**	$ 4.06
System	Brake System	**FileLink1**				**Qty**	1
Assembly	Rear Brake Rotor	**FileLink2**		**FileLink1**			
Part	Brake Rotor	**FileLink3**		**FileLink2**		**Extended Cost**	$ 4.06
P/N Base	BR 02001			**FileLink3**			
Suffix	AA						
Details	Bought, cost as made						

ItemOrder	Material	Use	UnitCost	Size1	Unit1	Size2	Unit2	Area Name	Area	Length	Density	Quantity	Sub Total
10	Cast Iron (per kg)	Stock material for brake rotor	$ 1.00	1.468	kg			Circle area, 230mm diameter	4.15E-02	4.50E-03	7850	1	$ 1.47
												Sub Total	**$ 1.47**

ItemOrder	Process	Use	UnitCost	Unit	Quantity	Multiplier	Mult. Val.	Sub Total
10	Machining Setup, Install and remove	Setup for laser cut	$ 1.30	Unit	1		1	$ 1.30
20	Laser cut	Cutout shape	$ 0.01	cm	51.84	Material - Cast iron	2.5	$ 1.30
							Sub Total	**$ 2.60**

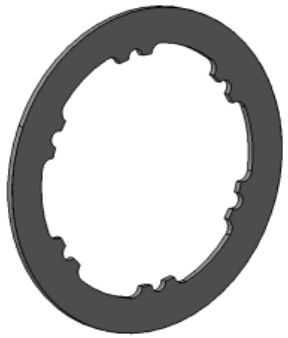

University	Ecole Centrale de Lyon		Back to BOM	**Car #**	81	**Part Cost**	$ 7.37
System	Brake System	Drawing :	FileLink1			**Qty**	1
Assembly	Rear Brake Rotor		**FileLink2**	**FileLink1**			
Part	Brake Shrink Disc		**FileLink3**	**FileLink2**		**Extended Cost**	$ 7.37
P/N Base	BR 02002			**FileLink3**			
Suffix	AA						
Details	llows brake rotor to be mounted floating						

ItemOrder	Material	Use	UnitCost	Size1	Unit1	Size2	Unit2	Area Name	Area	Length	Density	Quantity	Sub Total
10	Steel, Mild	Stock material for brake rotor	$ 2.25	0.839	kg			Circle area, 165mm diameter	2.14E-02	0.005	7850	1	$ 1.89
												Sub Total	**$ 1.89**

ItemOrder	Process	Use	UnitCost	Unit	Quantity	Multiplier	Mult. Val.	Sub Total
10	Machining Setup, Install and remove	Setup for laser cut	$ 1.30	Unit	1		1	$ 1.30
20	Laser cut	Cutout shape	$ 0.01	cm	139.30	Material - Steel	3	$ 4.18
							Sub Total	**$ 5.48**

BR 02002

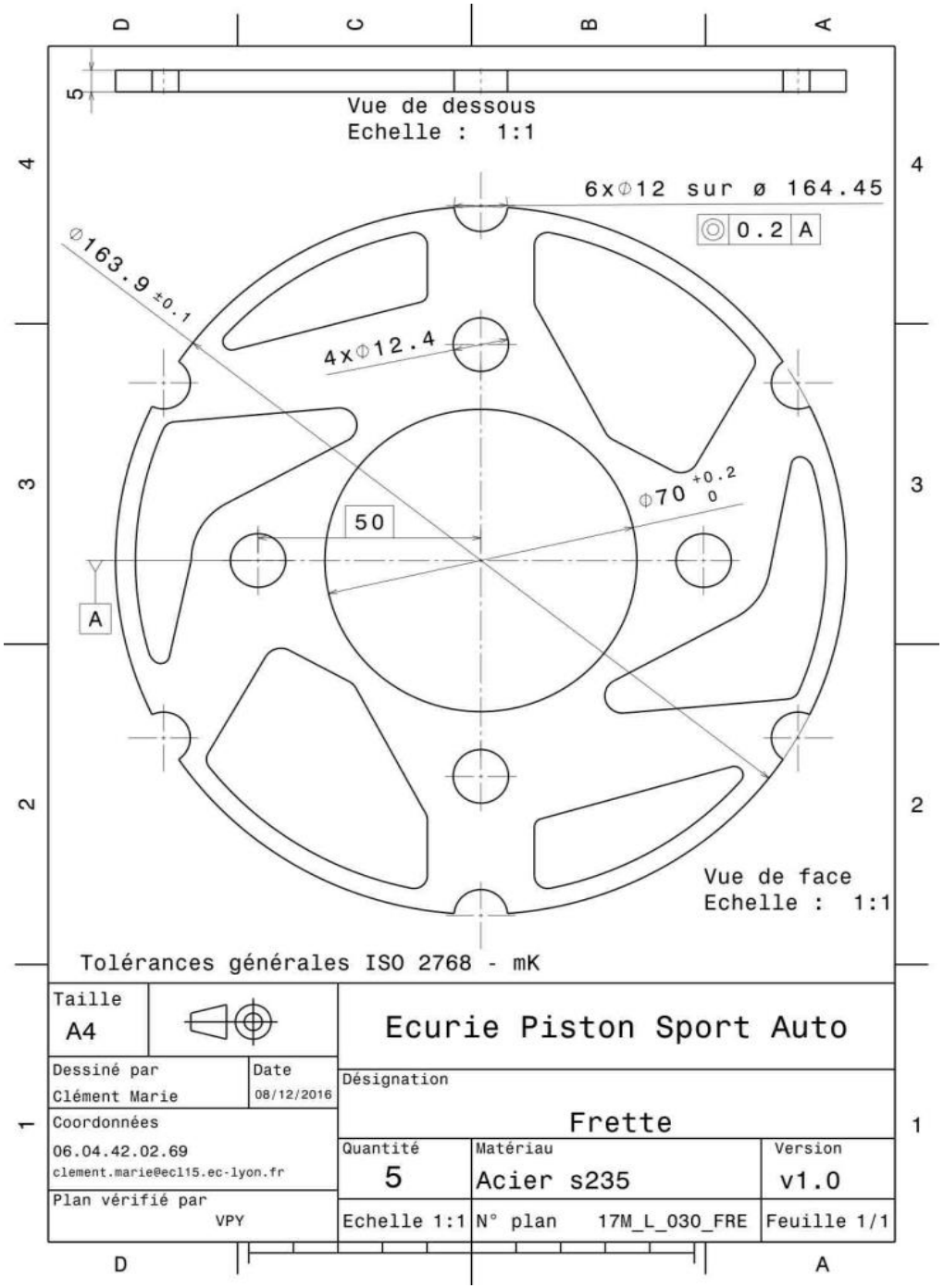
5
Vue de dessous
Echelle : 1:1
6xΦ12 sur ø 164.45
0.2 A
Ø163.9 ±0.1
4xΦ12.4
Φ70 +0.2 0
50
A
Vue de face
Echelle : 1:1
Tolérances générales ISO 2768 - mK
Taille
A4
Ecurie Piston Sport Auto
Dessiné par
Clément Marie
Date
08/12/2016
Désignation
Frette
Coordonnées
06.04.42.02.69
clement.marie@ecl15.ec-lyon.fr
Quantité
5
Matériau
Acier s235
Version
v1.0
Plan vérifié par
VPY
Echelle 1:1
N° plan 17M_L_030_FRE
Feuille 1/1

University	Ecole Centrale de Lyon		Back to BOM	**Car #**	81	**Part Cost**	$ 1.39
System	Brake System	**FileLink1**				**Qty**	6
Assembly	Rear Brake Rotor	**FileLink2**		**FileLink1**			
Part	Brake Rotor Button	**FileLink3**		**FileLink2**		**Extended Cost**	$ 8.36
P/N Base	BR 02003			**FileLink3**			
Suffix	AA						
Details	Buttons between brake rotor and brake shrink disc						

ItemOrder	Material	Use	UnitCost	Size1	Unit1	Size2	Unit2	Area Name	Area	Length	Density	Quantity	Sub Total
10	Steel, Mild	Material for part	$ 2.25	0.007	kg			Circle area, 12mm diameter	1.13E-04	0.008	7850	1	$ 0.02
												Sub Total	**$ 0.02**

ItemOrder	Process	Use	UnitCost	Unit	Quantity	Multiplier	Mult. Val.	Sub Total
10	Machining Setup, Install and remove	Setup for machining	$ 1.30	Unit	1		1	$ 1.30
20	Machining		$ 0.04	cm^3	0.65	Material - Steel	3	$ 0.08
							Sub Total	**$ 1.38**

University	Ecole Centrale de Lyon	Back to BOM	Car #	81	Asm Cost	$ 632.93
System	Brake System				Qty	1
Assembly	Brake Circuit Assembly		FileLink1		
P/N Base	BR A0003		FileLink2		Extended Cost	$ 632.93
Suffix	AA		FileLink3		
Details	Brake Line assembly				

ItemOrder	Part	Part Cost	Quantity	Sub Total
10	Brake Reservoir Mount	$ 2.21	1	$ 2.21
20	Brake Reservoir Tab	$ 1.55	1	$ 1.55
			Sub Total	$ 3.76

ItemOrder	Material	Use	UnitCost	Size1	Unit1	Size2	Unit2	Area Name	Area	Length	Density	Quantity	Sub Total
10	Master Cylinder, Beringer MC12.7 x 22	Master Cylinder	$ 160.59	1	unit							2	$ 321.18
20	Balance Bar, Tilton, 72-250	Brake between rear and front	$ 30.00	1	unit							1	$ 30.00
30	Paint	Protect steel tab from rust	$ 10.00	0.002	m^2							0.002	$ 0.02
40	Banjo Fitting, 45 Deg., Steel	Brake line	$ 15.75	6	mm							6	$ 94.50
50	Banjo Bolt, Steel	Brake line	$ 4.08	6	mm							6	$ 24.48
60	Adapter/L.P./Union Reducer//Brass	Brake line	$ 0.79	6	mm	6	mm					6	$ 4.74
70	Fitting/L.P./Tee/Flare-Flare-Pipe/Steel/	Tee to split right and left brake lines	$ 10.10	6	mm							2	$ 20.20
80	Crush Washer	Brake line	$ 0.28	6	mm							12	$ 3.38
90	Hydraulic Fluid Reservoir, Remate (Plastic)	Fluid reservoir	$ 5.00	1	unit							2	$ 10.00
100	Brake Light Pressure Switch Banjo Bolt	Brake light	$ 8.00	1	unit							1	$ 8.00
110	Hose, High Pressure, Stainless Steel Braided Outer	Brake line between master cylinder and caliper	$ 12.11	6	mm							5.6	$ 67.82
120	Hose, Rubber	Brake line between fluid reservoirs and master cylinder	$ 2.16	12	mm							0.5	$ 1.08
130	Fluid, Oil	Braking Fluid	$ 0.23	0.3	liter							1	$ 0.23
												Sub Total	$ 585.63

ItemOrder	Process	Use	UnitCost	Unit	Quantity	Multiplier	Mult. Val.	Sub Total
10	Weld	Weld brake reservoir tab to frame	$ 0.15	cm	2.4		1	$ 0.36
20	Aerosol Apply	Paint steel tab	$ 5.25	m^2	0.02		1	$ 0.11
30	Assemble, 1 kg, Loose	Fix Brake reservoir mount to brake reservoir tab	$ 0.06	unit	1		1	$ 0.06
40	Ratchet <= 6.35 mm	Fix Brake reservoir mount to brake reservoir tab	$ 0.50	unit	2		1	$ 1.00
50	Reaction Tool <= 6.35 mm	Fix Brake reservoir mount to brake reservoir tab	$ 0.25	unit	2		1	$ 0.50
60	Assemble, 1 kg, Loose	Assemble fluid reservoirs on reservoir mount	$ 0.06	unit	2		1	$ 0.12
70	Assemble, 1 kg, Loose	Fix tees on the frames	$ 0.06	unit	2		1	$ 0.12
80	Assemble, 1kg, Line-on-Line	Banjo bolts on master cylinders and calipers	$ 0.13	unit	6		1	$ 0.78
90	Ratchet <= 25.4 mm	Banjo bolts on master cylinders and calipers	$ 0.75	unit	6		1	$ 4.50
100	Cut (scissors, knife)	Cut hoses between reservoirs and MC	$ 0.06	cm	4.1	Repeat - 3	3	$ 0.74
110	Cut (scissors, knife)	Cut hoses between MC and calipers	$ 0.06	cm	2	Repeat - 6	6	$ 0.72
120	Hand, Tight <= 6.35 mm	Put the hose in the banjos and in the adapters	$ 0.50	unit	12		1	$ 6.00
130	Wrench <= 25.4 mm	Tighten the banjos and the adapters	$ 1.50	unit	12		1	$ 18.00
140	Reaction Tool <= 25.4 mm	Reaction tool to lock the banjos and the adapters	$ 0.25	unit	12		1	$ 3.00
150	Hand, Loose <= 25.4 mm	Put hoses between reservois and master cylinders	$ 0.50	unit	4		1	$ 2.00
160	Install Tie Wrap (Zip Tie, Cable Clamp)	Install clamps on the frame and the A-arms	$ 0.09	unit	22		1	$ 1.98
							Sub Total	$ 39.98

ItemOrder	Fastener	Use	UnitCost	Size1	Unit1	Size2	Unit2	Quantity	Sub Total
10	Bolt, Grade 8.8 (SAE 5)	Assemble reservoir tab and reservoir mount	$ 0.02	4	mm	20	mm	2	$ 0.04
20	Nut, Grade 8.8 (SAE 5)	Assemble reservoir tab and reservoir mount	$ 0.02	4	mm			4	$ 0.08
30	Washer, Grade 8.8 (SAE 5)	Assemble reservoir tab and reservoir mount	$ 0.01	1	unit			2	$ 0.02
40	Hose Clamp, Worm Drive	Between reservoirs and master cylinders	$ 0.55	13	mm			4	$ 2.21
50	Tie Wrap	Fix the brake line and the tees on the frame, and the reservoirs	$ 0.04	1	unit			22	$ 0.88
								Sub Total	$ 3.23

ItemOrder	Tooling	Use	UnitCost	Unit	Quantity	PVF	FractionIncluded	Sub Total
10	Welds - Welding Fixture	Weld the reservoir tab to the frame	$ 500.00	point	2	3000	1	$ 0.33
							Sub Total	$ 0.33

University	Ecole Centrale de Lyon			Back to BOM	**Car #**	81	**Part Cost**	$	2.21
System	Brake System	Drawing :	FileLink1				**Qty**		1
Assembly	Brake Circuit Assembly		**FileLink2**		**FileLink1**				
Part	Brake Reservoir Mount		**FileLink3**		**FileLink2**		**Extended Cost**	$	2.21
P/N Base	BR 03001				**FileLink3**				
Suffix	AA								
Details	Aluminium mount to hold reservoirs								

ItemOrder	Material	Use	UnitCost	Size1	Unit1	Size2	Unit2	Area Name	Area	Length	Density	Quantity	Sub Total
10	Aluminium, Normal		$ 4.20	0.039	kg			Rectangular area, 82x70 mm	5.74E-03	2.50E-03	2712	1	$ 0.16
												Sub Total	**$ 0.16**

ItemOrder	Process	Use	UnitCost	Unit	Quantity	Multiplier	Mult. Val.	Sub Total
10	Machining setup, Install and Remove		$ 1.30	Unit	1		1	$ 1.30
20	Laser cut		$ 0.01	cm	24.39		1	$ 0.24
30	Sheet metal bends		$ 0.25	bend	2		1	$ 0.50
							Sub Total	**$ 2.04**

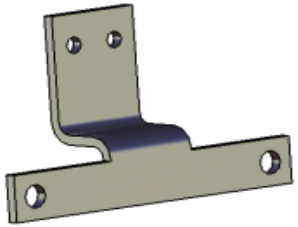

BR 03001

Rayon de pliure 3 mm

La pièce est symétrique

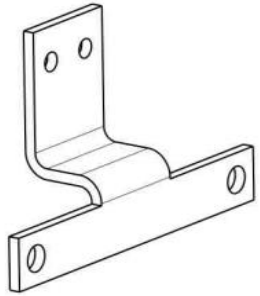

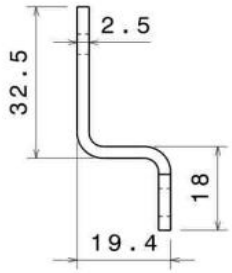

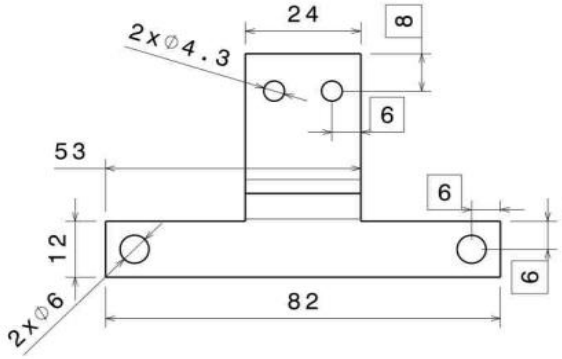

Tolérances générales ISO 2768 - mK

Taille A4		Ecurie Piston Sport Auto
Dessiné par Roland FAURE	Date 13/12/2016	Désignation Support bocal de frein
Coordonnées Tél : 06 37 48 48 42 Mail : roland.faure@ecl15.ec-lyon.fr		Quantité 1 / Matériau Aluminium 2017 T4 / Version 1.0
Plan vérifié par AGU		Echelle 1:1 / Numéro du plan 17M-I-027-SBF / Feuille 1/1

University	Ecole Centrale de Lyon			Back to BOM	**Car #**	81	**Part Cost**	$	1.55
System	Brake System	Drawing :	FileLink1				**Qty**		1
Assembly	Brake Circuit Assembly		**FileLink2**		**FileLink1**				
Part	Brake Reservoir Tab		**FileLink3**		**FileLink2**		**Extended Cost**	$	1.55
P/N Base	BR 03002				**FileLink3**				
Suffix	AA								
Details	Steel tab to carry reservoir mount								

ItemOrder	Material	Use	UnitCost	Size1	Unit1	Size2	Unit2	Area Name	Area	Length	Density	Quantity	Sub Total
10	Steel, Mild		$ 2.25	0.012	kg			Rectangular area, 25x40 mm	1.00E-03	1.50E-03	7850	1	$ 0.03
												Sub Total	**$ 0.03**

ItemOrder	Process	Use	UnitCost	Unit	Quantity	Multiplier	Mult. Val.	Sub Total
10	Machining Setup, Install and remove		$ 1.30	Unit	1		1	$ 1.30
20	Laser Cut		$ 0.01	cm	7.49	Material - Steel	3	$ 0.22
							Sub Total	**$ 1.52**

BR 03002

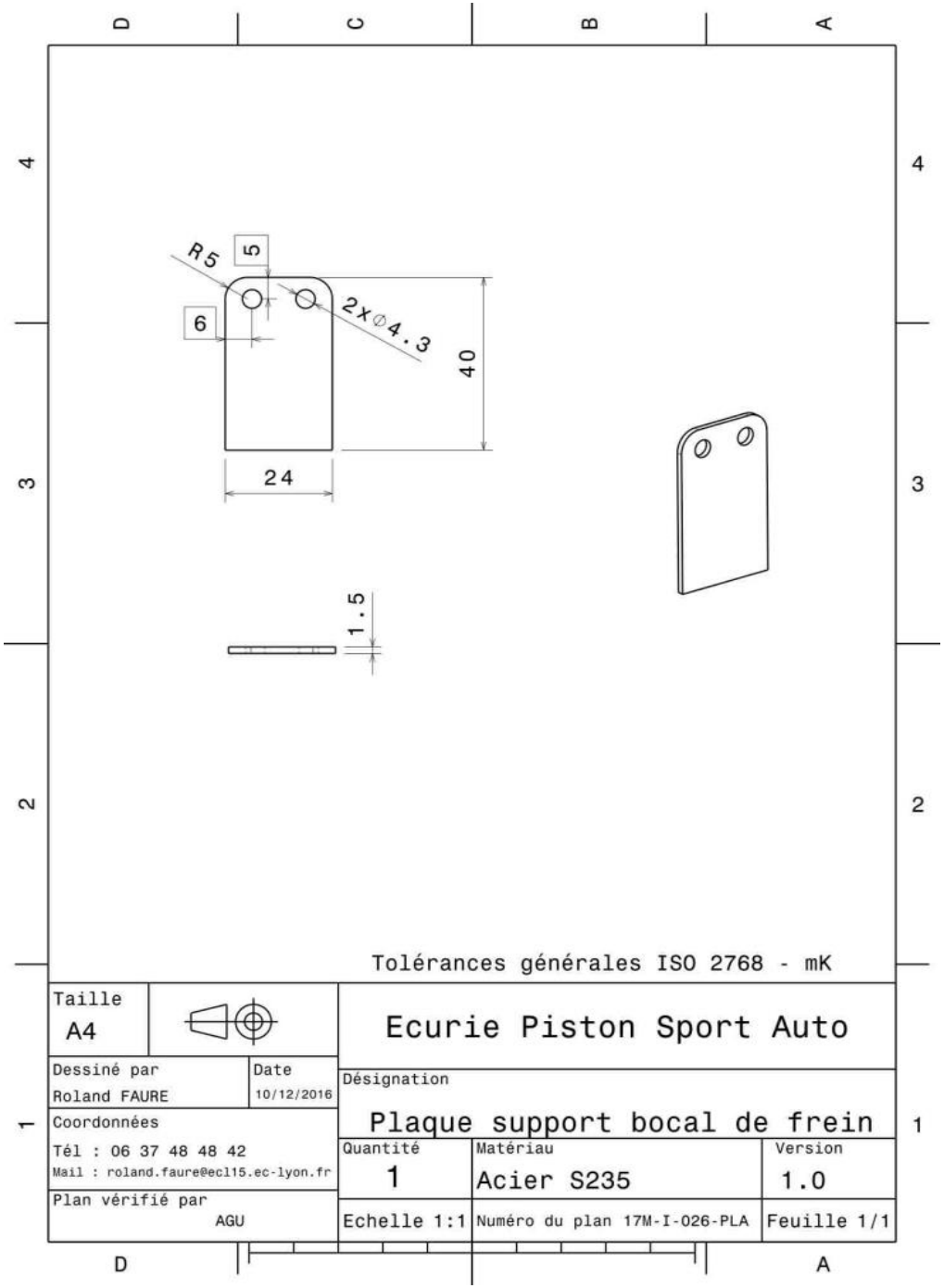
R5
5
6
2x⌀4.3
40
24
1.5
Tolérances générales ISO 2768 - mK
Taille
A4
Ecurie Piston Sport Auto
Dessiné par
Roland FAURE
Date
10/12/2016
Désignation
Plaque support bocal de frein
Coordonnées
Tél : 06 37 48 48 42
Mail : roland.faure@ecl15.ec-lyon.fr
Quantité
1
Matériau
Acier S235
Version
1.0
Plan vérifié par
AGU
Echelle 1:1
Numéro du plan 17M-I-026-PLA
Feuille 1/1

Ecurie Piston Sport Auto

ÉCOLE CENTRALE LYON

CAR #81

Engine & Drivetrain

University	Ecole Centrale de Lyon	Back to BOM	**Car #**	81	**Asm Cost** $ 1,633.10
System	Engine & Drivetrain				**Qty** 1
Assembly	Engine		**FileLink1**		
P/N Base	EN A0001		**FileLink2**		**Extended Cost** $ 1,633.10
Suffix	AA		**FileLink3**		
Details	Honda CBR 600 RR type PC40				

ItemOrder	Part	Part Cost	Quantity	Sub Total
10	Flat sump	$ 41.21	1	$ 41.21
20	Rear tab	$ 1.33	2	$ 2.66
30	Rear tube	$ 2.38	1	$ 2.38
			Sub Total	**$ 46.25**

ItemOrder	Material	Use	UnitCost	Size1	Unit1	Size2	Unit2	Area Name	Area	Length	Density	Quantity	Sub Total
10	Engine and Transmission, Ultra High Performance (>10 HP/100 cc)	Honda CBR 600 RR - type PC40	$ 2.50	599	cc							1	1,497.50
20	Fluid, oil	Engine Oil	$ 0.75	3.5	L							3.5	$ 2.63
30	Paint	Paint of the rear tabs	$ 10.00	0.003	m^2							0.003	$ 0.03
40	Adhesive	Seal paste	$ -									1	$ -
												Sub Total	**$ 1,500.15**

ItemOrder	Process	Use	UnitCost	Unit	Quantity	Multiplier	Mult. Val.	Sub Total
10	Weld	Weld rear tabs to the frame	$ 0.15	cm	5.96		1	$ 0.89
20	Aerosol apply	Paint of the rear tabs	$ 5.25	m^2	0.003		1	$ 0.01
30	Assemble, >20 kg, Interference	Assemble engine in frame	$ 5.63	Unit	1		1	$ 5.63
40	Assemble, 1kg, Line-on-Line	Positioning of the rear tube	$ 0.13	Unit	1		1	$ 0.13
50	Ratchet <= 25,4mm	Tighten M12 rear bolts	$ 0.75	Unit	2		1	$ 1.50
60	Ratchet <= 25,4mm	Tighten M12 front bolts	$ 0.75	Unit	2		1	$ 1.50
70	Reaction tool, <=25,4mm	Tighten M12 front bolts	$ 0.25	Unit	2		1	$ 0.50
80	Liquid Applicator Gun	Seal paste application	$ 0.20	cm	70		1	$ 14.00
90	Assemble, 1 kg, Line-on-Line	Assemble Flat sump	$ 0.13	unit	1		1	$ 0.13
100	Ratchet <= 6.35 mm	Tighten flat sump blots	$ 0.50	unit	12		1	$ 6.00
110	Engine first start, includes fuel		$ 50.00	unit	1		1	$ 50.00
							Sub Total	**$ 80.29**

ItemOrder	Fastener	Use	UnitCost	Size1	Unit1	Size2	Unit2	Quantity	Sub Total
10	Bolt, Grade 8.8 (SAE 5)	Bolt engine to the rear tab	$ 1.05	12	mm	80	mm	2	$ 2.10
20	Washer, Grade 8.8 (SAE 5)	Bolt engine to the rear tab	$ 0.01		unit			2	$ 0.02
20	Bolt, Grade 8.8 (SAE 5)	Bolt engine to the front tubes	$ 1.40	12	mm	100	mm	2	$ 2.80
30	Nut, Grade 8.8 (SAE 5)	Bolt engine to the front tubes	$ 0.10	12	mm			2	$ 0.20
40	Washer, Grade 8.8 (SAE 5)	Bolt engine to the frame	$ 0.01		unit			6	$ 0.06
50	Bolt, Grade 8.8 (SAE 5)	Bolt the flat sump	$ 0.04	6	mm	15	mm	12	$ 0.44
40	Washer, Grade 8.8 (SAE 5)	Washer for the flat sump	$ 0.01		unit			12	$ 0.12
								Sub Total	**$ 5.74**

ItemOrder	Tooling	Use	UnitCost	Unit	Quantity	PVF	FractionIncluded	Sub Total
10	Welds - Welding Fixture	Rear tabs welding	$ 500.00	point	4	3000	1	$ 0.67
							Sub Total	**$ 0.67**

University	Ecole Centrale de Lyon		Back to BOM	**Car #**	81	**Part Cost**	$ 41.21
System	Engine & Drivetrain	**FileLink1**				**Qty**	1
Assembly	Engine	**FileLink2**		**FileLink1**			
Part	Flat Sump	**FileLink3**		**FileLink2**		**Extended Cost**	$ 41.21
P/N Base	EN 01001			**FileLink3**			
Suffix	AA						
Details	Flat Sump, custom made						

ItemOrder	Material	Use	UnitCost	Size1	Unit1	Size2	Unit2	Area Name	Area	Length	Density	Quantity	Sub Total
10	Aluminum, Normal	Folded base - 5754	$ 4.20	233	mm	276	mm	Rectangular area, 233x276 mm	6.43E-02	0.0025	2712	1	$ 1.83
20	Aluminum, Normal	Upper plate - 5754	$ 4.20	250	mm	200	mm	Rectangular area, 250x200 mm	5.00E-02	0.015	2712	1	$ 8.54
30	Aluminum, Normal	Wall - 5754	$ 4.20	168	mm	94.5	mm	Rectangular area, 168x95 mm	1.60E-02	0.0025	2712	1	$ 0.45
												Sub Total	**$ 10.83**

ItemOrder	Process	Use	UnitCost	Unit	Quantity	Multiplier	Mult. Val.	Sub Total
10	Machining Setup, installation and remove	Laser cut, upper plate	$ 1.30	Unit	1			$ 1.30
20	Laser cut	Upper plate	$ 0.01	cm	166			$ 1.66
30	Machining Setup, installation and remove	Laser cut folded base-wall	$ 1.30	Unit	1			$ 1.30
40	Laser cut	Laser cut folded base-wall	$ 0.01	cm	155			$ 1.55
50	Sheet metal bends	Fold base and wall	$ 0.25	Unit	5			$ 1.25
60	Machining Setup, installation and remove	Install folded base in drill	$ 1.30	Unit	1			$ 1.30
70	Drilled holes < 25.4 mm dia.	Drain valve hole (must be drilled after bending)	$ 0.35	Unit	1			$ 0.35
80	Weld	Weld the 3 plates together	$ 0.15	cm	88.9			$ 13.34
							Sub Total	**$ 22.05**

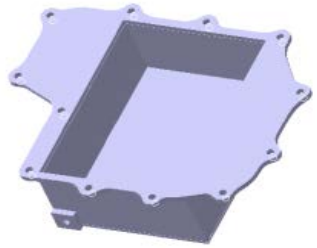

ItemOrder	Tooling	Use	UnitCost	Unit	Quantity	PVF	FracIncld	Sub Total
10	Welds- Welding Fixture	Mounts Welding	$ 500.00	point	50	3000	1	$ 8.33
							Sub Total	**$ 8.33**

University	Ecole Centrale de Lyon			Back to BOM	**Car #**	81	**Part Cost**	$	1.33
System	Engine & Drivetrain	Drawing :	FileLink1				**Qty**		2
Assembly	Engine		**FileLink2**		**FileLink1**				
Part	Rear tab		**FileLink3**		**FileLink2**		**Extended Cost**	$	2.66
P/N Base	EN 01002				**FileLink3**				
Suffix	AA								
Details	To attach the engine to the frame								

ItemOrder	Material	Use	UnitCost	Size1	Unit1	Size2	Unit2	Area Name	Area	Length	Density	Quantity	Sub Total
10	Steel, Mild		$ 2.25	0.064	kg			Rectangular area, 45x30 mm	1.35E-03	0.006	7850	1	$ 0.14
												Sub Total	**$ 0.14**

ItemOrder	Process	Use	UnitCost	Unit	Quantity	Multiplier	Mult. Val.	Sub Total
10	Machining Setup, installation and remove	Setup for laser cut	$ 1.30	Unit	1	2 parts made from a single machine setup	0.5	$ 0.65
20	Laser cut		$ 0.01	cm	17.92	Material - Steel	3	$ 0.54
							Sub Total	**$ 1.19**

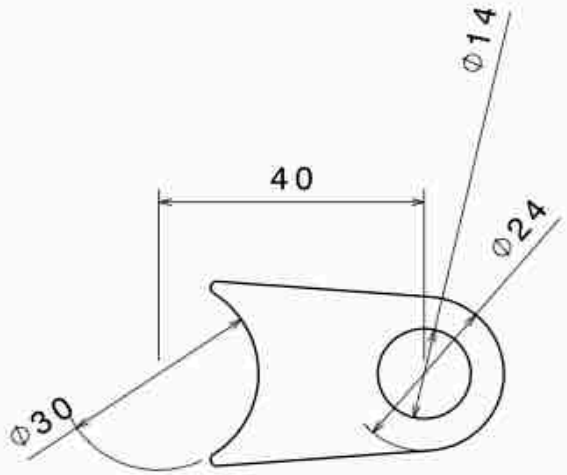

Vue de face
Echelle : 1:1

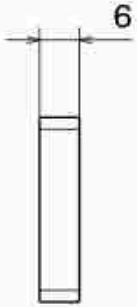

Vue de gauche
Echelle : 1:1

Tolérances générales : ISO 2768mK

Taille A4		Ecurie Piston Sport Auto
Dessiné par William PIERRÉ	Date 08/12/2016	Désignation Chape fixation moteur AR
Coordonnées Tel : 06 88 06 96 96 Mail : wpierre@ec-lyon.fr		Quantité 2 / Matériau acier s235 / Version 1.0
Plan vérifié par LOD		Echelle 1:1 / N° 17M_M_041_CHP / Feuille 1/1

University	Ecole Centrale de Lyon		Back to BOM	**Car #**	81	**Part Cost**	$ 2.38
System	Engine & Drivetrain	Drawing :	FileLink1			**Qty**	1
Assembly	Engine		**FileLink2**	**FileLink1**			
Part	Rear tube		**FileLink3**	**FileLink2**		**Extended Cost**	$ 2.38
P/N Base	EN 01003			**FileLink3**			
Suffix	AA						
Details	To attach the engine to the frame						

ItemOrder	Material	Use	UnitCost	Size1	Unit1	Size2	Unit2	Area Name	Area	Length	Density	Quantity	Sub Total
10	Steel, Alloy		$ 2.25	0.063	kg			Round area, 16mm diam.	2.01E-04	0.040	7850	1	$ 0.14
												Sub Total	**$ 0.14**

ItemOrder	Process	Use	UnitCost	Unit	Quantity	Multiplier	Mult. Val.	Sub Total
10	Machining Setup, installation and remove		$ 1.30	Unit	1		1	$ 1.30
20	Machining	To 12mm diam.	$ 0.04	cm^3	4.52	Material - Steel	3	$ 0.54
30	Threading, internal (machining)		$ 0.10	cm	4		1	$ 0.40
							Sub Total	**$ 2.24**

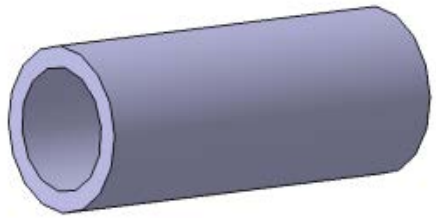

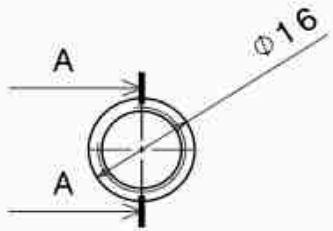

Vue de face
Echelle : 1:1

Taraudage M12x1.75

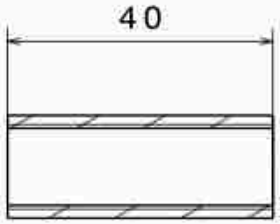

Coupe A-A
Echelle : 1:1

Tolérances générales : ISO 2768mK

Taille A4		Ecurie Piston Sport Auto
Dessiné par William PIERRÉ	Date 03/01/2017	Désignation: Tube fixation moteur
Coordonnées: Tel : 06 88 06 96 96, Mail : wpierre@ec-lyon.fr		Quantité: 1 / Matériau: Acier S500 / Version: 1.0
Plan vérifié par LOD		Echelle 1:1 / N° 17M_M_069_WPE / Feuille 1/1

University	Ecole Centrale de Lyon	Back to BOM	**Car #**	81	**Asm Cost** $ 197.31
System	Engine & Drivetrain				**Qty** 1
Assembly	Exhaust System		**FileLink1**		
P/N Base	EN A0002		**FileLink2**		**Extended Cost** $ 197.31
Suffix	AA		**FileLink3**		
Details					

ItemOrder	Part	Part Cost	Quantity	Sub Total
10	Exhaust Tip	$ 5.81	4	$ 23.24
20	Exhaust Flange	$ 1.74	4	$ 6.95
30	Primary Collector tubing	$ 10.22	1	$ 10.22
40	Muffler	$ 40.65	1	$ 40.65
50	Secondary collector tubing	$ 21.71	4	$ 86.82
60	Muffler Collar	$ 10.65	1	$ 10.65
70	Muffler Mount	$ 3.86	1	$ 3.86
80	Spacer	$ 1.46	1	$ 1.46
			Sub Total	**$ 183.84**

ItemOrder	Process	Use	UnitCost	Unit	Quantity	Multiplier	Mult. Val.	Sub Total
20	Assemble, 1 kg, Loose	Assemble flange to primary collector	$ 0.06	unit	4			$ 0.24
30	Assemble, 1 kg, Line-on-Line	Assemble collector to headers	$ 0.19	unit	4			$ 0.76
40	Assemble, 1 kg, Interference	Assemble headers to engine	$ 0.38	unit	1			$ 0.38
50	Assemble, 1 kg, Interference	Assemble secondary collector	$ 0.19	unit	2			$ 0.38
60	Ratchet <= 25.4 mm	Tignten headers nut	$ 0.75	unit	8			$ 6.00
70	Assemble, 3 kg, Line-on-Line	Muffler	$ 0.38	unit	1			$ 0.38
80	Assemble, 1 kg, Loose	Muffler mount	$ 0.06	unit	1			$ 0.06
90	Ratchet <= 6.35 mm	Tighten muffler mount nut	$ 0.50	unit	2			$ 1.00
100	Reaction Tool <= 6.35 mm	Reaction tool for M5 nut	$ 0.25	unit	2			$ 0.50
110	Assemble, 1 kg, Interference	Springs	$ 0.19	unit	5			$ 0.95
120	Assemble, 1 kg, Line-on-Line	Muffler collar,washers and spacer	$ 0.19	unit	1			$ 0.19
130	Ratchet <= 25.4 mm	Tighten muffler collar bolt	$ 0.75	unit	1			$ 0.75
							Sub Total	**$ 11.59**

ItemOrder	Fastener	Use	UnitCost	Size1	Unit1	Size2	Unit2	Quantity	Sub Total
10	Nut, Grade 8.8 (SAE 5)	Headers nuts	$ 0.04	8	mm			8	$ 0.32
20	Washer, Grade 8.8 (SAE 5)	Muffler collar washers	$ 0.01	8	mm			2	$ 0.02
30	Bolt, Grade 8.8 (SAE 5)	Muffler collar bolt	$ 0.10	8	mm	25	mm	1	$ 0.10
40	Nut, Grade 8.8 (SAE 5)	Muffler mount nut	$ 0.02	5	mm			2	$ 0.04
50	Bolt, Grade 8.8 (SAE 5)	Muffler mount bolt	$ 0.03	5	mm	20	mm	2	$ 0.06
								Sub Total	**$ 0.54**

ItemOrder	Tooling	Use	UnitCost	Unit	Quantity	PVF	FractionIncluded	Sub Total
10	Welds - Welding Fixture		$ 500.00	point	8	3000	1	$ 1.33
							Sub Total	**$ 1.33**

University	Ecole Centrale de Lyon		Back to BOM	**Car #**	81	**Part Cost**	$ 5.81
System	Engine & Drivetrain	Drawing :	FileLink1			**Qty**	4
Assembly	Exhaust System	**FileLink2**		**FileLink1**			
Part	Exhaust Tip	**FileLink3**		**FileLink2**		**Extended Cost**	$ 23.24
P/N Base	EN 02001			**FileLink3**			
Suffix	AA						
Details							

ItemOrder	Material	Use	UnitCost	Size1	Unit1	Size2	Unit2	Area Name	Area	Length	Density	Quantity	Sub Total
10	Steel, Mild		$ 2.25	0.285	kg			Round 43mm diam.	1.45E-03	0.025	7850	1	$ 0.64
												Sub Total	**$ 0.64**

ItemOrder	Process	Use	UnitCost	Unit	Quantity	Multiplier	Mult. Val.	Sub Total
10	Machining Setup, Install and remove		$ 1.30	unit	1		1	$ 1.30
20	Machining	Inner	$ 0.04	cm^3	21.9	Material - Steel	3	$ 2.63
30	Machining Setup, Change		$ 0.65	unit	1		1	$ 0.65
40	Machining	Outer	$ 0.04	cm^3	4.92	Material - Steel	3	$ 0.59
							Sub Total	**$ 5.17**

EN 02001

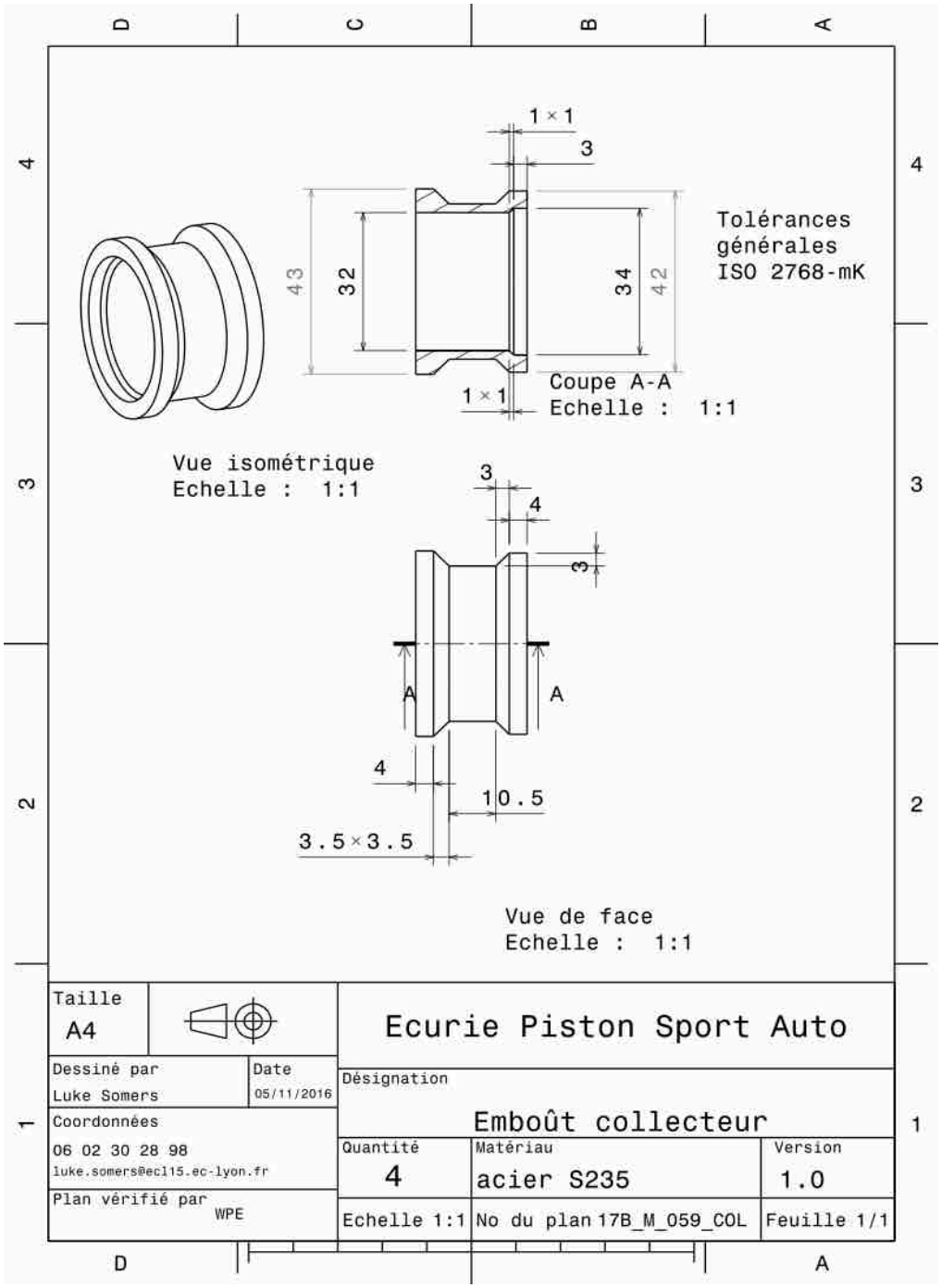
1 × 1
3
43
32
34
42
Tolérances générales ISO 2768-mK
1 × 1
Coupe A-A
Echelle : 1:1
Vue isométrique
Echelle : 1:1
3
4
3
A
A
4
10.5
3.5 × 3.5
Vue de face
Echelle : 1:1
Taille
A4
Ecurie Piston Sport Auto
Dessiné par
Luke Somers
Date
05/11/2016
Désignation
Emboût collecteur
Coordonnées
06 02 30 28 98
luke.somers@ecl15.ec-lyon.fr
Quantité
4
Matériau
acier S235
Version
1.0
Plan vérifié par
WPE
Echelle 1:1
No du plan 17B_M_059_COL
Feuille 1/1

University	Ecole Centrale de Lyon		Back to BOM	**Car #**	81	**Part Cost**	$ 1.74
System	Engine & Drivetrain	Drawing :	FileLink1			**Qty**	4
Assembly	Exhaust System		**FileLink2**	**FileLink1**			
Part	Exhaust Flange		**FileLink3**	**FileLink2**		**Extended Cost**	$ 6.95
P/N Base	EN 02002			**FileLink3**			
Suffix	AA						
Details							

ItemOrder	Material	Use	UnitCost	Size1	Unit1	Size2	Unit2	Area Name	Area	Length	Density	Quantity	Sub Total
10	Steel mild	Flange material	$ 2.25	0.157	kg			Rectangular area 80 x 50mm	4.00E-03	0.005	7850	1	$ 0.35
												Sub Total	**$ 0.35**

ItemOrder	Process	Use	UnitCost	Unit	Quantity	Multiplier	Mult. Val.	Sub Total
10	Machining Setup, Install and remove		$ 1.30	unit	1	4 parts made from a single machining setup	0.25	$ 0.33
20	Laser Cut	Flange cut	$ 0.01	cm	35.3	Material - Steel	3	$ 1.06
							Sub Total	**$ 1.38**

EN 02002

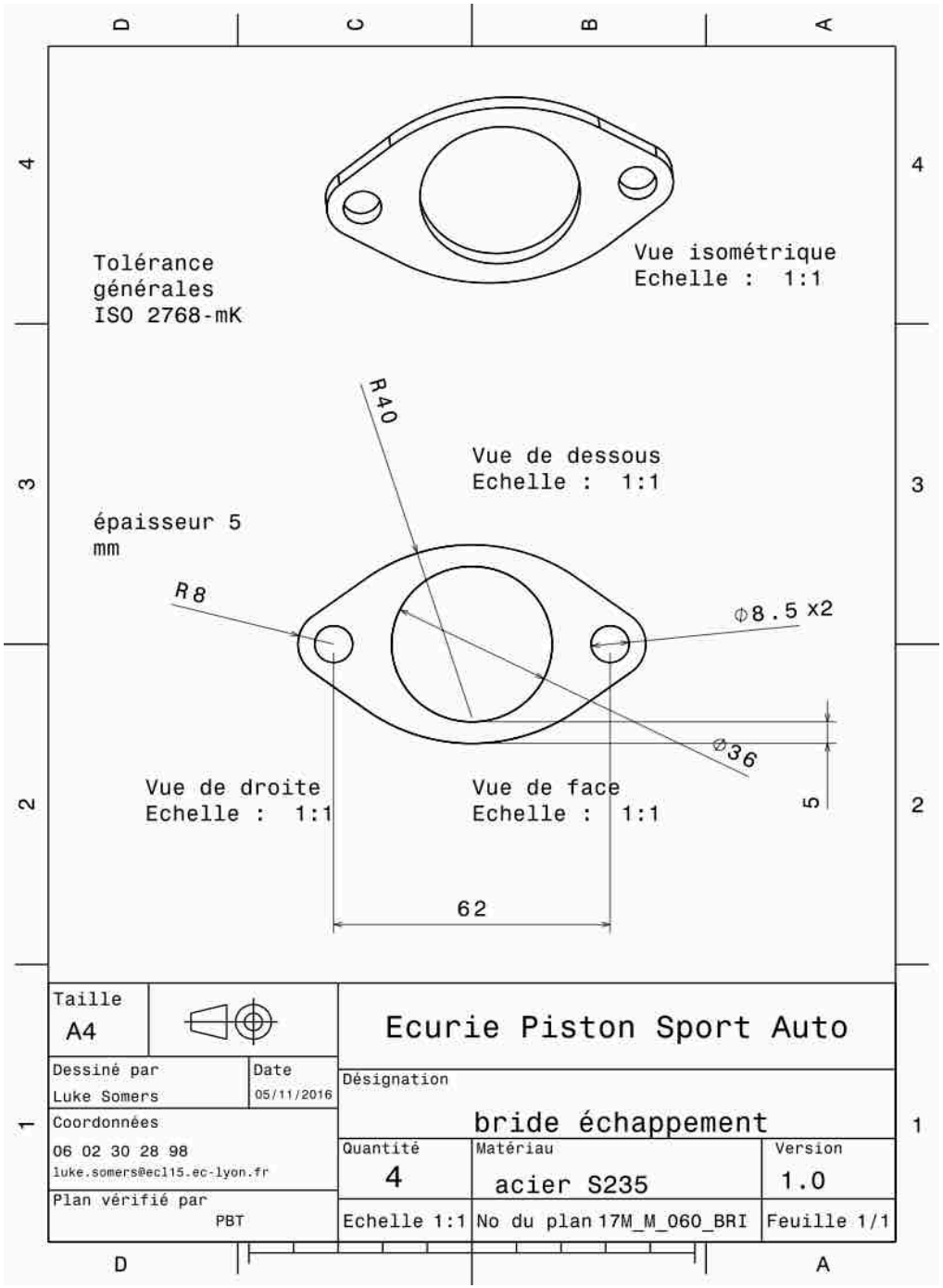
Tolérance
générales
ISO 2768-mK
Vue isométrique
Echelle : 1:1
R40
Vue de dessous
Echelle : 1:1
épaisseur 5
mm
R8
⌀8.5 x2
⌀36
Vue de droite
Echelle : 1:1
Vue de face
Echelle : 1:1
5
62
Taille
A4
Ecurie Piston Sport Auto
Dessiné par
Luke Somers
Date
05/11/2016
Désignation
bride échappement
Coordonnées
06 02 30 28 98
luke.somers@ecl15.ec-lyon.fr
Quantité
4
Matériau
acier S235
Version
1.0
Plan vérifié par
PBT
Echelle 1:1
No du plan 17M_M_060_BRI
Feuille 1/1

University	Ecole Centrale de Lyon		Back to BOM	**Car #**	81	**Part Cost**	$ 10.22
System	Engine & Drivetrain	**FileLink1**				**Qty**	1
Assembly	Exhaust System	**FileLink2**		**FileLink1**			
Part	Primary Collector tubing	**FileLink3**		**FileLink2**		**Extended Cost**	$ 10.22
P/N Base	EN 02003			**FileLink3**			
Suffix	AA						
Details							

ItemOrder	Material	Use	UnitCost	Size1	Unit1	Size2	Unit2	Area Name	Area	Length	Density	Quantity	Sub Total
10	Steel, Stainless	Collector material	$ 2.25	0.192	kg			Round 32 x 1.5mm	1.44E-04	0.170	7850	1	$ 0.43
												Sub Total	**$ 0.43**

ItemOrder	Process	Use	UnitCost	Unit	Quantity	Multiplier	Mult. Val.	Sub Total
10	Tube cut		$ 0.15	cm	12.8			$ 1.92
20	Tube end preperation for welding		$ 0.75	end	4			$ 3.00
30	Weld - Round Tubing		$ 0.38	cm	12.8			$ 4.86
							Sub Total	**$ 9.78**

University	Ecole Centrale de Lyon		Back to BOM	**Car #**	81	**Part Cost**	$ 40.65
System	Engine & Drivetrain	**FileLink1**				**Qty**	1
Assembly	Exhaust System	**FileLink2**		**FileLink1**			
Part	Muffler	**FileLink3**		**FileLink2**		**Extended Cost**	$ 40.65
P/N Base	EN 02004			**FileLink3**			
Suffix	AA						
Details	Bought, cost as made						

ItemOrder	Material	Use	UnitCost	Size1	Unit1	Size2	Unit2	Area Name	Area	Length	Density	Quantity	Sub Total
10	Titanium	Material for muffler body	$ 22.00	0.500	kg			Rectangular area 0.5 x 0.4m	0.2		4500	1	$ 11.00
20	Steel, Mild		$ 2.25	0.500	kg			Rectangular area 0.5 x 0.15m	0.08		7850	1	$ 1.13
30	Muffler Batting		$ 0.003	4000	cm^3							1	$ 12.00
												Sub Total	**$ 24.13**

ItemOrder	Process	Use	UnitCost	Unit	Quantity	Multiplier	Mult. Val.	Sub Total
10	Sheet metal bends		$ 0.25	bend	2			$ 0.50
20	Sheet metal bends		$ 0.25	bend	2			$ 0.50
30	Sheet metal punching		$ 0.03	cm^2	300			$ 9.00
40	Sheet metal stamping		$ 0.03	cm^2	100			$ 3.00
50	Assemble, 1 kg, Line-on-Line		$ 0.13	unit	4			$ 0.52
60	Riveting		$ 0.25	unit	12			$ 3.00
							Sub Total	**$ 16.52**

University	Ecole Centrale de Lyon		Back to BOM	**Car #**	81	**Part Cost**	$ 21.71
System	Engine & Drivetrain	**FileLink1**				**Qty**	4
Assembly	Exhaust System	**FileLink2**		**FileLink1**			
Part	Secondary collector tubing	**FileLink3**		**FileLink2**		**Extended Cost**	$ 86.82
P/N Base	EN 02005			**FileLink3**			
Suffix	AA						
Details							

ItemOrder	Material	Use	UnitCost	Size1	Unit1	Size2	Unit2	Area Name	Area	Length	Density	Quantity	Sub Total
10	Steel, Stainless	Collector material	$ 2.25	1.274	kg			Round 50mm x 1.5mm	2.29E-04	0.71	7850	1	$ 2.87
												Sub Total	**$ 2.87**

ItemOrder	Process	Use	UnitCost	Unit	Quantity	Multiplier	Mult. Val.	Sub Total
10	Tube bends		$ 0.75	bend	2			$ 1.50
20	Tube cut		$ 0.15	cm	12.8			$ 1.92
30	Tube end preperation for welding		$ 0.75	end	8			$ 6.00
40	Weld - Round Tubing		$ 0.38	cm	6.4			$ 9.42
							Sub Total	**$ 18.84**

University	Ecole Centrale de Lyon		Back to BOM	**Car #**	81	**Part Cost**	$ 10.65
System	Engine & Drivetrain	**FileLink1**				**Qty**	1
Assembly	Exhaust System	**FileLink2**		**FileLink1**			
Part	Muffler Collar	**FileLink3**		**FileLink2**		**Extended Cost**	$ 10.65
P/N Base	EN 02006			**FileLink3**			
Suffix	AA						
Details	Maintains the muffle in position						

ItemOrder	Material	Use	UnitCost	Size1	Unit1	Size2	Unit2	Area Name	Area	Length	Density	Quantity	Sub Total
10	Carbon Fiber, 1 Ply	Collar material	$ 200.00	0.050	kg							1	$ 10.00
												Sub Total	**$ 10.00**

ItemOrder	Process	Use	UnitCost	Unit	Quantity	Multiplier	Mult. Val.	Sub Total
10	Lamination, Manual		$ 35.00	m^2	0.0112			$ 0.39
20	Cure, Oven		$ 20.00	m^2	0.0112			$ 0.22
							Sub Total	**$ 0.62**

ItemOrder	Tooling	Use	UnitCost	Unit	Quantity	PVF	FracIncld	Sub Total
10	Lamination - Composite Tool		$ 10,000	m^2	0.0112	3000	1	$ 0.04
							Sub Total	**$ 0.04**

University	Ecole Centrale de Lyon		Back to BOM	**Car #**	81	**Part Cost**	$ 3.86
System	Engine & Drivetrain	**FileLink1**				**Qty**	1
Assembly	Exhaust System	**FileLink2**		**FileLink1**			
Part	Muffler Mount	**FileLink3**		**FileLink2**		**Extended Cost**	$ 3.86
P/N Base	EN 02007			**FileLink3**			
Suffix	AA						
Details							

ItemOrder	Material	Use	UnitCost	Size1	Unit1	Size2	Unit2	Area Name	Area	Length	Density	Quantity	Sub Total
10	Aluminum, Normal		$ 4.20	0.041	kg			Rectangular area 40 x 25mm	1.00E-03	0.015	2712	1	$ 0.17
												Sub Total	**$ 0.17**

ItemOrder	Process	Use	UnitCost	Unit	Quantity	Multiplier	Mult. Val.	Sub Total
10	Machining Setup, Install and remove		$ 1.30	unit	1			$ 1.30
20	Machining		$ 0.04	cm^3	7	Material - Aluminum	1	$ 0.28
30	Drilled holes < 25.4 mm dia.		$ 0.35	hole	1			$ 0.35
40	Machining Setup, Change		$ 0.65	unit	1			$ 0.65
50	Machining		$ 0.04	cm^3	4	Material - Aluminum	1	$ 0.16
60	Threading, Internal (machining)		$ 0.10	cm	1.5			$ 0.15
70	Saw or tubing cuts		$ 0.40	cm	2			$ 0.80
							Sub Total	**$ 3.69**

University	Ecole Centrale de Lyon		Back to BOM	**Car #**	81	**Part Cost**	$ 1.46
System	Engine & Drivetrain	**FileLink1**				**Qty**	1
Assembly	Exhaust System	**FileLink2**		**FileLink1**			
Part	Spacer	**FileLink3**		**FileLink2**		**Extended Cost**	$ 1.46
P/N Base	EN 02008			**FileLink3**			
Suffix	AA						
Details							

ItemOrder	Material	Use	UnitCost	Size1	Unit1	Size2	Unit2	Area Name	Area	Length	Density	Quantity	Sub Total
10	Aluminum, Normal	Spacer material	$ 4.20	0.014	kg			Round 16mm	2.01E-04	0.025	2712	1	$ 0.06
												Sub Total	**$ 0.06**

ItemOrder	Process	Use	UnitCost	Unit	Quantity	Multiplier	Mult. Val.	Sub Total
10	Machining Setup, Install and remove		$ 1.30	unit	1			$ 1.30
20	Machining		$ 0.04	cm^3	2.5	Material - Aluminum	1	$ 0.10
							Sub Total	**$ 1.40**

University	Ecole Centrale de Lyon	Back to BOM	**Car #**	81	**Asm Cost** $ 174.19
System	Engine & Drivetrain				**Qty** 1
Assembly	Fuel Tank Assembly		**FileLink1**		
P/N Base	EN A0003		**FileLink2**		**Extended Cost** $ 174.19
Suffix	AA		**FileLink3**		
Details	Fuel tank with filler neck				

ItemOrder	Part	Part Cost	Quantity	Sub Total
10	Fuel Tank (with filler neck)	$ 73.61	1	$ 73.61
20	Filler Neck Collar	$ 14.59	1	$ 14.59
30	Filler Cap	$ 22.60	1	$ 22.60
40	Filler Tube	$ 13.25	1	$ 13.25
50	Lateral tab	$ 1.99	1	$ 1.99
60	Rear tab	$ 1.66	1	$ 1.66
70	Front tab	$ 1.68	1	$ 1.68
80	Compression tab	$ 2.05	1	$ 2.05
			Sub Total	**$ 131.42**

ItemOrder	Material	Use	UnitCost	Size1	Unit1	Size2	Unit2	Area Name	Area	Length	Density	Quantity	Sub Total
10	Mount, Vibration-Damping, Sandwich	Vibration-Damping, Sandwich for fuel tank	$ 5.40	20	mm							2	$ 10.80
20	Mount, Vibration-Damping, Sandwich	Vibration-Damping, Sandwich for fuel tank	$ 5.40	20	mm							1	$ 5.40
30	Mount, Vibration-Damping, Sandwich	Vibration-Damping, Sandwich for fuel tank	$ 8.10	30	mm							1	$ 8.10
40	Hose, Silicone	Filler hose raccording Filler tube and Filler neck	$ 20.68	44	mm							0.150	$ 3.10
50	Paint	Tabs painting	$ 10.00	0.011	m^2							0.011	$ 0.11
												Sub Total	**$ 27.51**

ItemOrder	Process	Use	UnitCost	Unit	Quantity	Multiplier	Mult. Val.	Sub Total
10	Weld	Tabs welding	$ 0.15	cm	9.83		1	$ 1.47
20	Aerosol apply	Tabs painting	$ 5.25	m^2	0.011		1	$ 0.06
30	Assemble, 1kg, Loose	Vibration dampings sandwich on Fuel tank	$ 0.06	Unit	4		1	$ 0.24
40	Ratchet, <= 25.4mm	Tighten vibration damping sandwich on Fuel Tank	$ 0.75	Unit	4		1	$ 3.00
50	Assemble, 3 kg, Line-on-Line	Fuel tank on the tabs	$ 0.38	Unit	1		1	$ 0.38
60	Ratchet, <= 25.4mm	Tighten Fuel tank on the tabs	$ 0.75	Unit	4		1	$ 3.00
70	Reaction tool, <= 25.4mm	Tighten Fuel tank on the tabs	$ 0.25	Unit	4		1	$ 1.00
80	Assemble, 1kg, Loose	Filler collar on Filler tube	$ 0.06	Unit	1		1	$ 0.06
90	Assemble, 1kg, Loose	Clamps on the Filler hose	$ 0.06	Unit	2		1	$ 0.12
100	Assemble, 1kg, Interferance	Filler hose on the filler neck and Filler tube	$ 0.19	Unit	2		1	$ 0.38
110	Screwdriver > 1 Turn	Hose clamps	$ 0.50	Unit	2		1	$ 1.00
120	Ratchet <= 6.35 mm	Filler tube collar on collar tab	$ 0.50	Unit	1		1	$ 0.50
130	Reaction Tool <= 6.35 mm	Tighten Filler tube collar on collar tab	$ 0.25	Unit	1		1	$ 0.25
140	Hand, Loose > 25.4 mm	Filler tube cap	$ 0.75	Unit	1		1	$ 0.75
							Sub Total	**$ 12.21**

ItemOrder	Fastener	Use	UnitCost	Size1	Unit1	Size2	Unit2	Quantity	Sub Total
10	Nut, Grade 8.8 (SAE 5)	M8 nut for vibration damping sandwich	$ 0.04	8	mm			2	$ 0.08
20	Washer, Grade 8.8 (SAE 5)	M8 washer for vibration damping sandwich	$ 0.01	8	mm			2	$ 0.02
30	Bolt, Grade 8.8 (SAE 5)	M6 bolt for collar on collar mount	$ 0.04	6	mm	20	mm	1	$ 0.04
40	Nut, Grade 8.8 (SAE 5)	M6 nut for collar on collar mount + for vibration damping sandwich	$ 0.03	6	mm			5	$ 0.15
50	Washer, Grade 8.8 (SAE 5)	M6 washer for collar on collar mount + for vibration damping sandwich	$ 0.01	6	mm			5	$ 0.05
60	Hose Clamp, Worm Drive	Clamps for filler neck and tube	$ 0.69	48	mm			2	$ 1.38
								Sub Total	**$ 1.72**

ItemOrder	Tooling	Use	UnitCost	Unit	Quantity	PVF	FracIncld	Sub Total
10	Welds - Welding Fixture	Tabs welding	$ 500.00	Point	8	3000	1	$ 1.33
							Sub Total	**$ 1.33**

University	Ecole Centrale de Lyon		Back to BOM	**Car #**	81	**Part Cost**	$ 73.61
System	Engine & Drivetrain	Drawing :	FileLink1			**Qty**	1
Assembly	Fuel Tank Assembly	Drawing :	FileLink2	**FileLink1**			
Part	Fuel Tank (with filler neck)		**FileLink3**	**FileLink2**		**Extended Cost**	$ 73.61
P/N Base	EN 03001			**FileLink3**			
Suffix	AA						
Details							

ItemOrder	Material	Use	UnitCost	Size1		Size2	Unit2	Area Name	Area	Length	Density	Quantity	Sub Total
10	Aluminum, Normal (per kg)	Fuel tank plate material	$ 4.20	3.431	kg	2.5	mm	Rectangular plate 460mm x 1100mm	5.06E-01	2.50E-03	2712	1	$ 14.41
20	Aluminum, Normal (per kg)	Nek tube	$ 4.20	0.103	kg	2	mm	Circular area (tube) 45mm x 2mm	2.70E-04	0.140	2712	1	$ 0.43
30	Aluminum, Normal (per kg)	Fittings plate material	$ 4.20	0.166	kg	2	mm	Rectangular plate 165mm x 185mm	3.05E-02	0.002	2712	1	$ 0.70
40	Fitting, Weld-in, Male, Aluminum	For Dash6 connection	$ 1.85	8	mm							3	$ 5.55
												Sub Total	**$ 21.09**

ItemOrder	Process	Use	UnitCost	Unit	Quantity	Multiplier	Mult. Val.	Sub Total
10	Machining Setup, Install and Remove	Plate material cut	$ 1.30	Unit	1	Material - Aluminum	1	$ 1.30
20	Laser cut	Main plate	$ 0.01	cm	261	Material - Aluminum	1	$ 2.61
30	Laser cut	Bottom plate	$ 0.01	cm	133	Material - Aluminum	1	$ 1.33
40	Laser cut	Bottom side plate	$ 0.01	cm	30	Material - Aluminum	1	$ 0.30
50	Machining Setup, Install and Remove	Fittings plate material cut	$ 1.30	Unit	1	Material - Aluminum	1	$ 1.30
60	Laser cut	Fittings plate	$ 0.01	cm	100	Material - Aluminum	1	$ 1.00
70	Sheet metal bends	Main plate bend	$ 0.25	Bend	3			$ 0.75
80	Sheet metal bends	Bottom side plate bend	$ 0.25	Bend	1			$ 0.25
90	Sheet metal bends	Front fittings bend	$ 0.25	Bend	8			$ 2.00
100	Sheet metal bends	Back fitting bend	$ 0.25	Bend	1			$ 0.25
110	Tube cut	Neck tube cut	$ 0.15	cm	4.5			$ 0.68
120	Weld	Fuel tank welding	$ 0.15	cm	227			$ 34.05
130	Weld - Round Tubing	Neck welding	$ 0.38	cm	4.5			$ 1.71
							Sub Total	**$ 47.53**

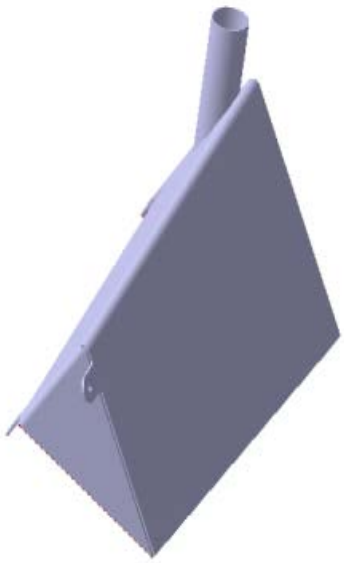

ItemOrder	Tooling	Use	UnitCost	Unit	Quantity	PVF	FracIncld	Sub Total
10	Welds - Welding Fixture		$ 500.00	Point	30	3000	1	$ 5.00
							Sub Total	**$ 5.00**

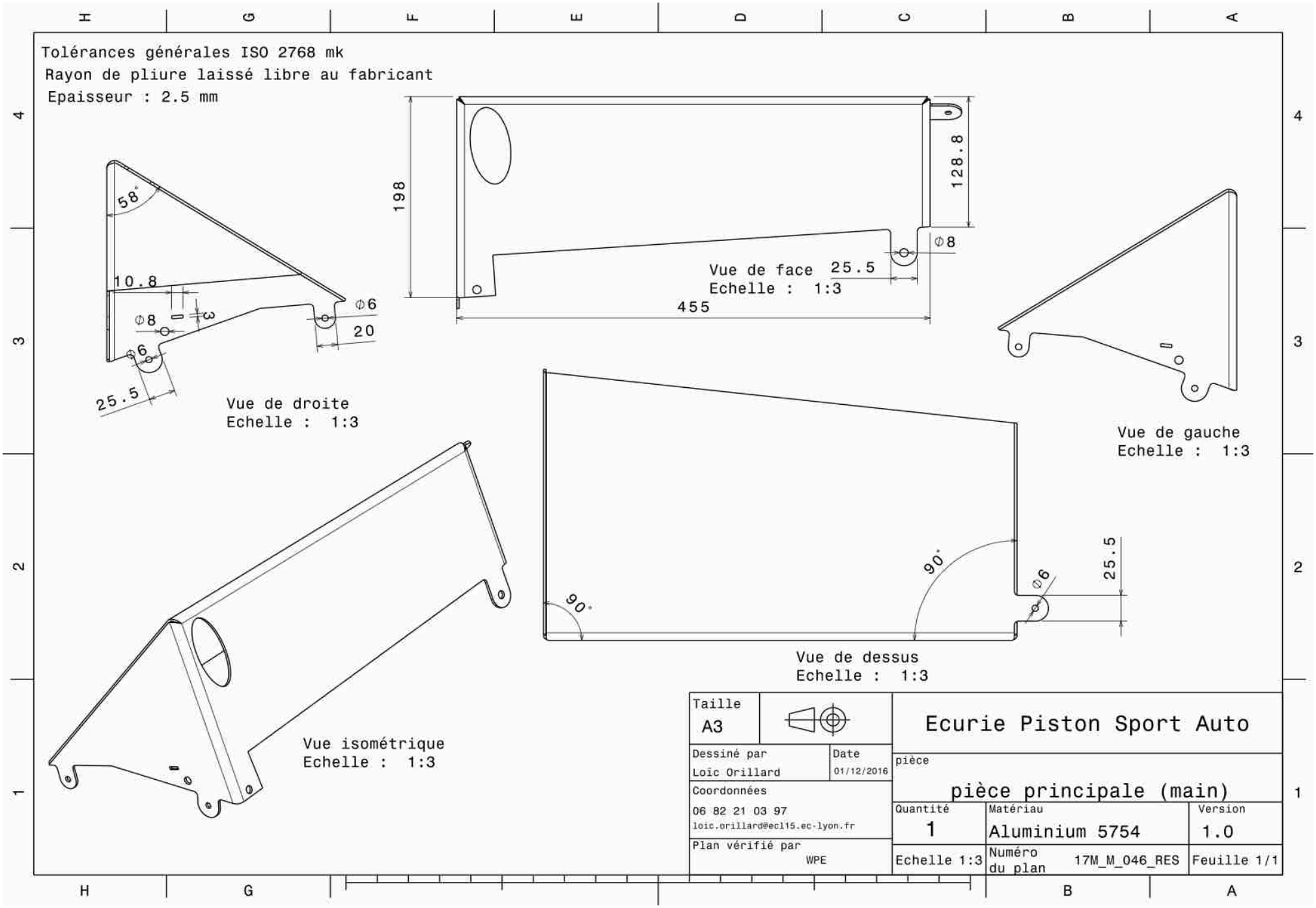
Tolérances générales ISO 2768 mk
Rayon de pliure laissé libre au fabricant
Epaisseur : 2.5 mm
58°
10.8
Φ8
3
Φ6
20
Φ6
25.5
Vue de droite
Echelle : 1:3
198
128.8
Φ8
25.5
455
Vue de face
Echelle : 1:3
Vue de gauche
Echelle : 1:3
90°
90°
Φ6
25.5
Vue de dessus
Echelle : 1:3
Vue isométrique
Echelle : 1:3
Taille
A3
Dessiné par
Loïc Orillard
Date
01/12/2016
Coordonnées
06 82 21 03 97
loic.orillard@ecl15.ec-lyon.fr
Plan vérifié par
WPE
Ecurie Piston Sport Auto
pièce
pièce principale (main)
Quantité
1
Matériau
Aluminium 5754
Version
1.0
Echelle 1:3
Numéro du plan
17M_M_046_RES
Feuille 1/1

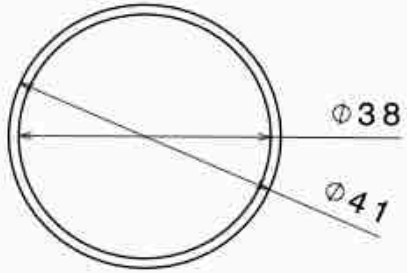

Vue de face
Echelle : 1:1

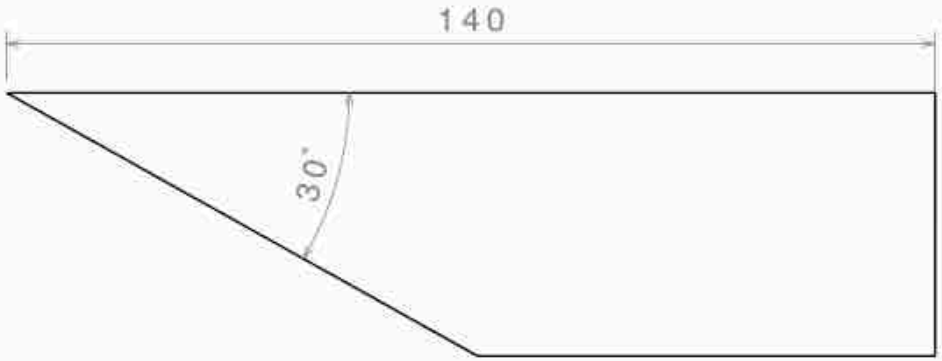

Vue de gauche
Echelle : 1:1

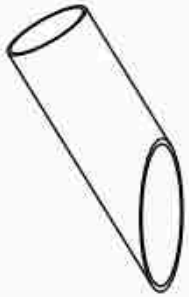

Vue isométrique
Echelle : 1:3

Tolérances générales ISO 2768 mk
Diamètres indicatifs : utiliser tube en stock avec diamètre intérieur supérieur à 38 mm

Taille A4		Ecurie Piston Sport Auto
Dessiné par Loïc Orillard	Date 01/12/2016	Désignation Réservoir - tube
Coordonnées 06 82 21 03 97 loic.orillard@ecl15.ec-lyon.fr		Quantité 1 / Matériau Aluminium 5754 / Version 1.0
Plan vérifié par WPE		Echelle 1:1 / Numéro du plan 17M_M_048_RES / Feuille 1/1

University	Ecole Centrale de Lyon		Back to BOM	**Car #**	81	**Part Cost**	$ 14.59
System	Engine & Drivetrain	**FileLink1**				**Qty**	1
Assembly	Fuel Tank Assembly	**FileLink2**		**FileLink1**			
Part	Filler Neck Collar	**FileLink3**		**FileLink2**		**Extended Cost**	$ 14.59
P/N Base	EN 03002			**FileLink3**			
Suffix	AA						
Details							

ItemOrder	Material	Use	UnitCost	Size1		Size2	Unit2	Area Name	Area	Length	Density	Quantity	Sub Total
10	Aluminum, Normal (per kg)	Filler neck body	$ 4.20	0.157	kg			circle area (tube) 45mm x 2mm	2.70E-04	0.215	2712	1	$ 0.66
20	Adapter/L.P./Barb to Male Pipe/90 Deg./Aluminum/Anodized		$ 3.72	6	mm	6	mm					2	$ 7.44
												Sub Total	**$ 8.10**

ItemOrder	Process	Use	UnitCost	Unit	Quantity	Multiplier	Mult. Val.	Sub Total
10	Tube cut	Filler neck body	$ 0.15	cm	4			$ 0.60
20	Machining Setup, Install and Remove		$ 1.30	Unit	1			$ 1.30
30	Drilled holes < 25.4 mm dia.		$ 0.35	Hole	2			$ 0.70
40	Threading, External (machining)	Thread for cap	$ 0.10	cm	1	Material - Aluminum	1	$ 0.10
50	Weld	Barb fittings welding on tube	$ 0.15	cm	4			$ 0.60
60	Cut (scissors, knife)	Hose cut	$ 0.06	cm	1			$ 0.06
70	Assemble, 1 kg, Interference	Hose mounting	$ 0.19	Unit	2			$ 0.38
80	Screwdriver > 1 Turn	Hose clamp	$ 0.50	Unit	2			$ 1.00
							Sub Total	**$ 4.74**

ItemOrder	Fastener	Use	UnitCost	Size1	Unit1	Size2	Unit2	Quantity	Sub Total
10	Hose Clamp, Worm Drive		$ 0.54	10	mm			2	$ 1.08
								Sub Total	**$ 1.08**

ItemOrder	Tooling	Use	UnitCost	Unit	Quantity	PVF	FracIncld	Sub Total
10	Welds - Welding Fixture		$ 500.00	Point	4	3000	1	$ 0.67
							Sub Total	**$ 0.67**

University	Ecole Centrale de Lyon		Back to BOM	**Car #**	81	**Part Cost**	$ 22.60
System	Engine & Drivetrain	**FileLink1**				**Qty**	1
Assembly	Fuel Tank Assembly	**FileLink2**		**FileLink1**			
Part	Filler Cap	**FileLink3**		**FileLink2**		**Extended Cost**	$ 22.60
P/N Base	EN 03003			**FileLink3**			
Suffix	AA						
Details							

ItemOrder	Material	Use	UnitCost	Size1		Size2	Unit2	Area Name	Area	Length	Density	Quantity	Sub Total
10	Aluminum - Normal (per kg)	Cap material	$ 4.20	0.080	kg			Round area diameter 50mm	1.96E-03	0.015	2712	1	$ 0.34
20	Fuel Check Valve, In-line, Aluminum Rollover		$ 15.00									1	$ 15.00
												Sub Total	**$ 15.34**

ItemOrder	Process	Use	UnitCost	Unit	Quantity	Multiplier	Mult. Val.	Sub Total
10	Machning Setup, Install and Remove		$ 1.30	Unit	1			$ 1.30
20	Machining		$ 0.04	cm^3	12	Material - Aluminium	1	$ 0.48
30	Threading, Internal (machining)		$ 0.10	cm	50	Material - Aluminium	1	$ 5.00
40	Drilled holes < 25.4 mm dia.	Fuel Check Valve hole (20mm)	$ 0.35	hole	1			$ 0.35
50	Assemble, 1 kg, Line-on-Line	Fuel Check Valve assembling	$ 0.13	Unit	1			$ 0.13
							Sub Total	**$ 7.26**

University	Ecole Centrale de Lyon		Back to BOM	**Car #**	81	**Part Cost**	$ 13.25
System	Engine & Drivetrain	**FileLink1**				**Qty**	1
Assembly	Fuel Tank Assembly	**FileLink2**		**FileLink1**			
Part	Filler Tube	**FileLink3**		**FileLink2**		**Extended Cost**	$ 13.25
P/N Base	EN 03004			**FileLink3**			
Suffix	AA						
Details							

ItemOrder	Material	Use	UnitCost	Size1		Size2	Unit2	Area Name	Area	Length	Density	Quantity	Sub Total
10	Aluminum, Normal (per kg)	Filler neck body	$ 4.20	0.081	kg			circle area (tube) 45mm x 2mm	1.38E-04	0.215	2712	1	$ 0.34
20	Adapter/L.P./Barb to Male Pipe/90 Deg./Aluminum/Anodized		$ 3.72	6	mm	6	mm					2	$ 7.44
30	Hose, Silicone	Sight tube	$ 2.82	6	mm	0.15	m					0.15	$ 0.42
												Sub Total	**$ 8.20**

ItemOrder	Process	Use	UnitCost	Unit	Quantity	Multiplier	Mult. Val.	Sub Total
10	Tube cut	Filler neck body	$ 0.15	cm	4			$ 0.60
20	Machining Setup, Install and Remove		$ 1.30	Unit	1			$ 1.30
30	Drilled holes < 25.4 mm dia.		$ 0.35	Hole	2			$ 0.70
40	Threading, External (machining)	Thread for cap	$ 0.10	cm	1	Material - Aluminum	1	$ 0.10
50	Weld	Barb fittings welding on tube	$ 0.15	cm	4			$ 0.60
							Sub Total	**$ 3.30**

ItemOrder	Fastener	Use	UnitCost	Size1	Unit1	Size2	Unit2	Quantity	Sub Total
10	Hose Clamp, Worm Drive		$ 0.54	10	mm			2	$ 1.08
								Sub Total	**$ 1.08**

ItemOrder	Tooling	Use	UnitCost	Unit	Quantity	PVF	FracIncld	Sub Total
10	Welds - Welding Fixture		$ 500.00	Point	4	3000	1	$ 0.67
							Sub Total	**$ 0.67**

University	Ecole Centrale de Lyon		Back to BOM	**Car #**	81	**Part Cost**	$ 1.99
System	Engine & Drivetrain	Drawing :	FileLink1			**Qty**	1
Assembly	Fuel Tank Assembly	**FileLink2**		**FileLink1**			
Part	Lateral tab	**FileLink3**		**FileLink2**		**Extended Cost**	$ 1.99
P/N Base	EN 03005			**FileLink3**			
Suffix	AA						
Details							

ItemOrder	Material	Use	UnitCost	Size1		Size2	Unit2	Area Name	Area	Length	Density	Quantity	Sub Total
10	Steel, Mild		$ 2.25	0.043	kg			Rectangular area, 70x26 mm	1.82E-03	0.003	7850	1	$ 0.10
												Sub Total	**$ 0.10**

ItemOrder	Process	Use	UnitCost	Unit	Quantity	Multiplier	Mult. Val.	Sub Total
10	Machining Setup, Install and Remove		$ 1.30	Unit	1		1	$ 1.30
20	Laser cut		$ 0.01	cm	19.64	Material - Steel	3	$ 0.59
							Sub Total	**$ 1.89**

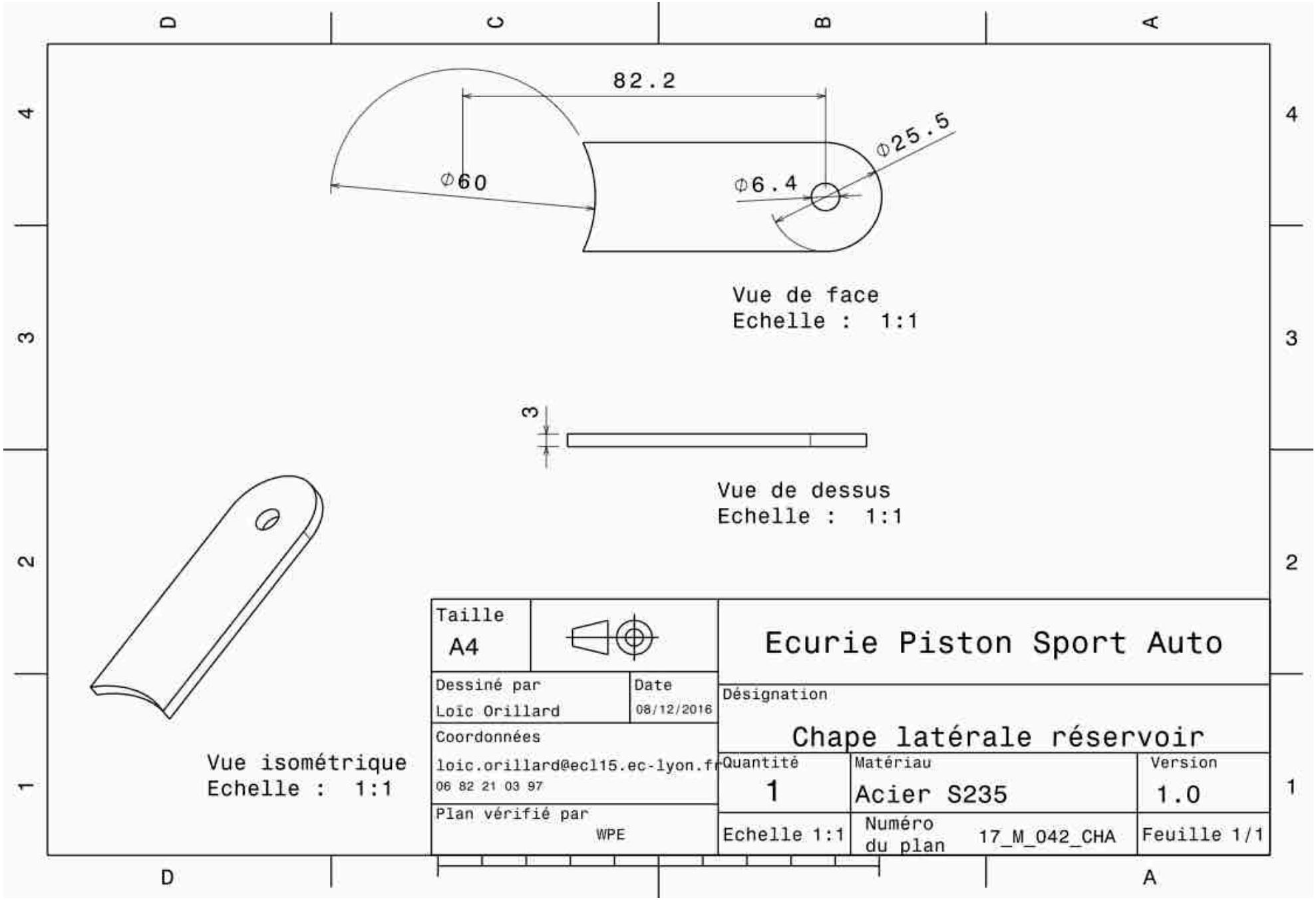
82.2
Φ60
Φ6.4
Φ25.5
Vue de face
Echelle : 1:1
3
Vue de dessus
Echelle : 1:1
Vue isométrique
Echelle : 1:1
Taille
A4
Ecurie Piston Sport Auto
Dessiné par
Loïc Orillard
Date
08/12/2016
Désignation
Chape latérale réservoir
Coordonnées
loic.orillard@ecl15.ec-lyon.fr
06 82 21 03 97
Quantité
1
Matériau
Acier S235
Version
1.0
Plan vérifié par
WPE
Echelle 1:1
Numéro du plan
17_M_042_CHA
Feuille 1/1

University	Ecole Centrale de Lyon		Back to BOM	**Car #**	81	**Part Cost**	$ 1.66
System	Engine & Drivetrain	Drawing :	FileLink1			**Qty**	1
Assembly	Fuel Tank Assembly	**FileLink2**		**FileLink1**			
Part	Rear tab	**FileLink3**		**FileLink2**		**Extended Cost**	$ 1.66
P/N Base	EN 03006			**FileLink3**			
Suffix	AA						
Details							

ItemOrder	Material	Use	UnitCost	Size1		Size2	Unit2	Area Name	Area	Length	Density	Quantity	Sub Total
10	Steel, Mild		$ 2.25	0.011	kg			Rectangular area, 27x26 mm	7.02E-04	0.002	7850	1	$ 0.02
												Sub Total	**$ 0.02**

ItemOrder	Process	Use	UnitCost	Unit	Quantity	Multiplier	Mult. Val.	Sub Total
10	Machining Setup, Install and Remove		$ 1.30	Unit	1		1	$ 1.30
20	Laser cut		$ 0.01	cm	11.27	Material - Steel	3	$ 0.34
							Sub Total	**$ 1.64**

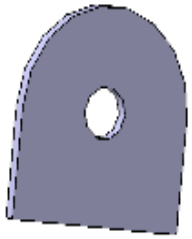

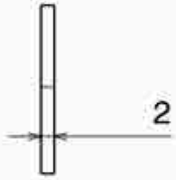

Vue de droite
Echelle : 1:1

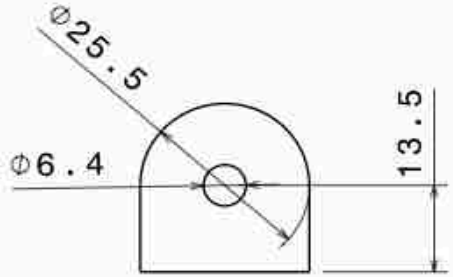

Vue de face
Echelle : 1:1

Vue isométrique
Echelle : 1:1

Taille A4		Ecurie Piston Sport Auto
Dessiné par Loïc Orillard	Date 01/12/2016	Désignation: Chape réservoir arrière
Coordonnées 06 82 21 03 97 loic.orillard@ecl15.ec-lyon.fr		Quantité 1 / Matériau Acier S235 / Version 1.0
Plan vérifié par WPE		Echelle 1:1 / Numéro du plan 17_M_044_CHA / Feuille 1/1

University	Ecole Centrale de Lyon		Back to BOM	**Car #**	81	**Part Cost**	$ 1.68
System	Engine & Drivetrain	Drawing :	FileLink1			**Qty**	1
Assembly	Fuel Tank Assembly	**FileLink2**		**FileLink1**			
Part	Front tab	**FileLink3**		**FileLink2**		**Extended Cost**	$ 1.68
P/N Base	EN 03007			**FileLink3**			
Suffix	AA						
Details							

ItemOrder	Material	Use	UnitCost	Size1		Size2	Unit2	Area Name	Area	Length	Density	Quantity	Sub Total
10	Steel, Mild		$ 2.25	0.011	kg			Rectangular area, 34x20 mm	6.80E-04	0.002	7850	1	$ 0.02
												Sub Total	**$ 0.02**

ItemOrder	Process	Use	UnitCost	Unit	Quantity	Multiplier	Mult. Val.	Sub Total
10	Machining Setup, Install and Remove		$ 1.30	Unit	1		1	$ 1.30
20	Laser cut		$ 0.01	cm	11.86	Material - Steel	3	$ 0.36
							Sub Total	**$ 1.66**

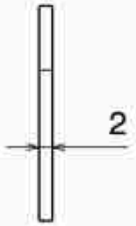

Vue de droite
Echelle : 1:1

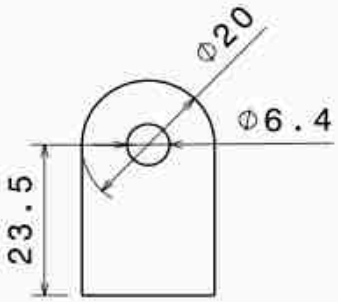

Vue de face
Echelle : 1:1

Vue isométrique
Echelle : 1:1

Taille A4		Ecurie Piston Sport Auto
Dessiné par Loïc Orillard	Date 01/12/2016	Désignation Chape réservoir avant
Coordonnées 06 82 21 03 97 loic.orillard@ecl15.ec-lyon.fr		Quantité 1 / Matériau Acier S235 / Version 1.0
Plan vérifié par WPE		Echelle 1:1 / Numéro du plan 17_M_045_CHA / Feuille 1/1

University	Ecole Centrale de Lyon		Back to BOM	**Car #**	81	**Part Cost**	$ 2.05
System	Engine & Drivetrain	Drawing :	FileLink1			**Qty**	1
Assembly	Fuel Tank Assembly	**FileLink2**		**FileLink1**			
Part	Compression tab	**FileLink3**		**FileLink2**		**Extended Cost**	$ 2.05
P/N Base	EN 03008			**FileLink3**			
Suffix	AA						
Details							

ItemOrder	Material	Use	UnitCost	Size1		Size2	Unit2	Area Name	Area	Length	Density	Quantity	Sub Total
10	Steel, Mild		$ 2.25	0.047	kg			Rectangular area, 77x26 mm	2.00E-03	0.003	7850	1	$ 0.11
												Sub Total	**$ 0.11**

ItemOrder	Process	Use	UnitCost	Unit	Quantity	Multiplier	Mult. Val.	Sub Total
10	Machining Setup, Install and Remove		$ 1.30	Unit	1		1	$ 1.30
20	Laser cut		$ 0.01	cm	21.36	Material - Steel	3	$ 0.64
							Sub Total	**$ 1.94**

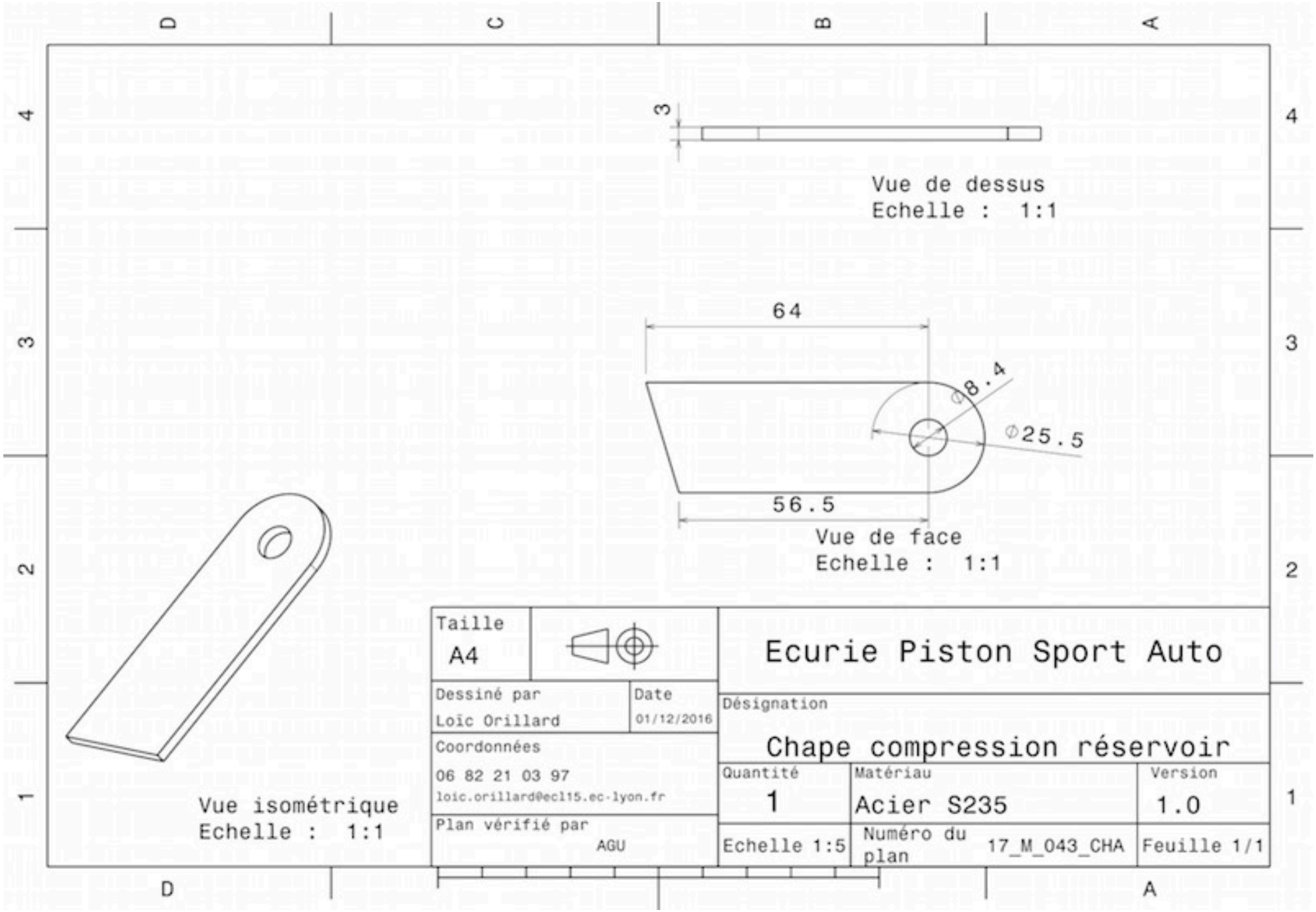
3
Vue de dessus
Echelle : 1:1
64
⌀8.4
⌀25.5
56.5
Vue de face
Echelle : 1:1
Vue isométrique
Echelle : 1:1
Taille
A4
Ecurie Piston Sport Auto
Dessiné par
Loïc Orillard
Date
01/12/2016
Désignation
Chape compression réservoir
Coordonnées
06 82 21 03 97
loic.orillard@ecl15.ec-lyon.fr
Quantité
1
Matériau
Acier S235
Version
1.0
Plan vérifié par
AGU
Echelle 1:5
Numéro du plan
17_M_043_CHA
Feuille 1/1

University	Ecole Centrale de Lyon	Back to BOM	**Car #**	81	**Asm Cost** $ 440.13
System	Engine & Drivetrain				**Qty** 1
Assembly	Fuel System		**FileLink1**		
P/N Base	EN A0004		**FileLink2**		**Extended Cost** $ 440.13
Suffix	AA		**FileLink3**		
Details					

ItemOrder	Part	Part Cost	Quantity	Sub Total
10	Fuel Rail	$ 7.64	1	$ 7.64
20	Fuel Pump Collar	$ 3.35	1	$ 3.35
30	Pressure Regulator Tab	$ 2.03	1	$ 2.03
40	Fuel Pump Tab	$ 1.55	1	$ 1.55
			Sub Total	**$ 14.58**

ItemOrder	Material	Use	UnitCost	Size1	Unit1	Size2	Unit2	Area Name	Area	Length	Density	Quantity	Sub Total
10	Fuel filter		$ 8.00									1	$ 8.00
20	Fuel Pump, Fuel Injected, Gasoline		$ 35.00									1	$ 35.00
30	Fuel Pressure Regulator, Gasoline		$ 15.00									1	$ 15.00
40	Fuel Injector, Gasoline		$ 10.00									4	$ 40.00
50	Hose, Low Pressure, Stainless Steel Braided Outer		$ 35.19	14.2	mm	1.5	m					2	$ 70.37
60	Fitting/L.P./Cap//Aluminum/ Anodized	Fuel tank draining port cap	$ 7.23	14.2	mm							1	$ 7.23
70	Fitting/L.P./Elbow/90 deg./Aluminum/Anodized	Pump out, Rail in, Regulator out	$ 26.58	14.2	mm							3	$ 79.75
80	Fitting/L.P./Straight/Aluminum/Anodized	Tank out, Pump in, T in and out, Tank return, Filter in and out, Banjo connection	$ 12.66	14.2	mm							8	$ 101.31
90	Banjo Fitting, Aluminum	Fuel rail alimentation	$ 13.50	12	mm							1	$ 13.50
100	Fitting/L.P./Tube Nut//Steel/	Banjo fitting on rail	$ 3.27	14.2	mm							1	$ 3.27
110	Adapter/L.P./Union Tee//Brass/	Pump out, regulator in, filter in	$ 3.86	14.2	mm	14.2	mm					1	$ 3.86
120	Adapter/L.P./Union/FeMale Flare//Aluminum/Anodized	Tee out, Regulator in	$ 5.99	14.2	mm	14.2	mm					1	$ 5.99
130	Adapter/L.P./Union Reducer//Aluminum/Anodized	Adaptater for Pump and regulator conical threading	$ 2.64	14.2	mm	10	mm					3	$ 7.92
140	Seal, O-Ring, Elastomer	Injector seals	$ 0.05									4	$ 0.20
150	Paint	Tabs painting	$ 10.00	0.0022	m^2							0.0022	$ 0.02
160	Hose, Rubber		$ 2.16	12								0.65	$ 1.40
												Sub Total	**$ 392.83**

ItemOrder	Process	Use	UnitCost	Unit	Quantity	Multiplier	Mult. Val.	Sub Total
10	Weld	Pump collar tab on frame (regulator tab only pointed)	$ 0.15	cm	2		1	$ 0.30
20	Aerosol apply	Tabs painting	$ 5.25	m^2	0.0022		1	$ 0.01
30	Assemble, 1 kg, Interference	Assemble fittings on hose	$ 0.19	Unit	1		1	$ 0.19
40	Assemble, 1 kg, Loose	Assemble Pump on Collar	$ 0.06	Unit	1		1	$ 0.06
50	Assemble, 1 kg, Loose	Assemble Pump + Collar on Pump tab	$ 0.06	Unit	1		1	$ 0.06
60	Ratchet <= 6.35 mm	Tighten M6 bolt between Pump Collar and Tab	$ 0.50	Unit	1		1	$ 0.50
70	Reaction Tool <= 6.35 mm	Reaction tool for M6 nut	$ 0.25	Unit	1		1	$ 0.25
80	Assemble, 1 kg, Loose	Assemble Fuel pressure regulator on Tab	$ 0.06	Unit	1		1	$ 0.06
90	Ratchet <= 6.35 mm	Tighten M6 bolt between Fuel pressure regulator and Tab	$ 0.50	Unit	2		1	$ 1.00
100	Reaction Tool <= 6.35 mm	Reaction tool for M6 nut	$ 0.25	Unit	2		1	$ 0.50

110	Assemble, 1 kg, Line-on-Line	Assemble Injectors seal O Ring	$ 0.13	Unit	4		1	$ 0.52
120	Assemble, 1 kg, Line-on-Line	Assemble Injectors on Fuel rail	$ 0.13	Unit	4		1	$ 0.52
130	Assemble, 1 kg, Line-on-Line	Assemble Rail on Admission pipe	$ 0.13	Unit	1		1	$ 0.13
140	Safety Wire, Install	Safety wire installation between fuel rail and intake pipe	$ 0.60	Unit	4		1	$ 2.40
150	Assemble, 1 kg, Loose	Assemble banjo on fuel rail	$ 0.06	Unit	1		1	$ 0.06
160	Ratchet <= 25.4 mm	Tighten Tube nut	$ 0.75	Unit	1		1	$ 0.75
170	Wrench <= 25.4 mm	Tighten fittings + adapters	$ 1.50	Unit	15		1	$ 22.50
180	Assemble, 1 kg, Loose	Assemble hose on the filler pipe	$ 0.19	Unit	1		1	$ 0.19
190	Wrench <= 25.4 mm	Assemble hose on the filler pipe	$ 1.50	Unit	1		1	$ 1.50
190	Reaction tool <= 25.4 mm	Assemble hose on the filler pipe	$ 0.25	Unit	1		1	$ 0.25
							Sub Total	**$ 31.75**

ItemOrder	Fastener	Use	UnitCost	Size1	Unit1	Size2	Unit2	Quantity	Sub Total
10	Bolt, Grade 8.8 (SAE 5)	M6 bolt for Pump collar on Tab	$ 0.04	6	mm	20	mm	1	$ 0.04
20	Nut, Grade 8.8 (SAE 5)	M6 nut for collar on collar mount	$ 0.03	6	mm			1	$ 0.03
30	Washer, Grade 8.8 (SAE 5)	M6 washer for collar on collar mount	$ 0.01	6	mm			2	$ 0.02
40	Bolt, Grade 8.8 (SAE 5)	M6 bolt for Pump collar on Tab	$ 0.07	6	mm	30	mm	2	$ 0.14
50	Nut, Grade 8.8 (SAE 5)	M6 nut for collar on collar mount	$ 0.03	6	mm			2	$ 0.06
60	Washer, Grade 8.8 (SAE 5)	M6 washer for collar on collar mount	$ 0.01	6	mm			2	$ 0.02
								Sub Total	**$ 0.31**

ItemOrder	Tooling	Use	UnitCost	Unit	Quantity	PVF	FractionInclude	Sub Total
10	Welds - Welding Fixture	Welding fixture from tabs (Fuel pump + Pressure regulator) on frame	$ 500.00	point	4	3000	1	$ 0.67
							Sub Total	**$ 0.67**

University	Ecole Centrale de Lyon		Back to BOM	**Car #**	81	**Part Cost**	$ 7.64
System	Engine & Drivetrain	**FileLink1**				**Qty**	1
Assembly	Fuel System	**FileLink2**		**FileLink1**			
Part	Fuel Rail	**FileLink3**		**FileLink2**		**Extended Cos**	$ 7.64
P/N Base	EN 04001			**FileLink3**			
Suffix	AA						
Details							

ItemOrder	Material	Use	UnitCost	Size1	Unit1	Size2	Unit2	Area Name	Area	Length	Density	Quantity	Sub Total
10	Steel, Mild	Main + injectors tube material	$ 2.25	0.161	kg			Round tube 16mm x 3mm	6.83E-05	0.300	7850	1	$ 0.36
20	Steel, Mild	Fitting tabs material	$ 2.25	0.047	kg			Rectangular area 100mm x 30mm	3.00E-03	0.002	7850	1	$ 0.11
												Sub Total	**$ 0.47**

ItemOrder	Process	Use	UnitCost	Unit	Quantity	Multiplier	Mult. Val.	Sub Total
10	Tube cut	Main + injectors tube cut	$ 0.15	cm	5			$ 0.75
20	Machining Setup, Install and Remove	Setup and remove for tube machining	$ 1.30	Unit	1			$ 1.30
30	Threading, External	Tube end threading for Banjo nut	$ 0.10	cm	1.5	Material- Steel	3	$ 0.45
40	Laser cut		$ 0.01	cm	18	Material- Steel	3	$ 0.54
50	Weld	Weld main tube + tabs	$ 0.15	cm	12			$ 1.80
							Sub Total	**$ 4.84**

ItemOrder	Tooling	Use	UnitCost	Unit	Quantity	PVF	FracIncld	Sub Total
10	Welds - Welding Fixture	Weld main tube + tabs	$ 500.00	point	14	3000	1	$ 2.33
							Sub Total	**$ 2.33**

University	Ecole Centrale de Lyon		Back to BOM	**Car #**	81	**Part Cost**	$ 3.35
System	Engine & Drivetrain	**FileLink1**				**Qty**	1
Assembly	Fuel System	**FileLink2**		**FileLink1**			
Part	Fuel Pump Collar	**FileLink3**		**FileLink2**		**Extended Cost**	$ 3.35
P/N Base	EN 04002			**FileLink3**			
Suffix	AA						
Details							

ItemOrder	Material	Use	UnitCost	Size1	Unit1	Size2	Unit2	Area Name	Area	Length	Density	Quantity	Sub Total
10	Aluminum - Normal	Collar material	$ 4.20	0.012	kg			Rectangular area 230x20 mm	4.60E-03	0.001	2712	1	$ 0.05
												Sub Total	**$ 0.05**

ItemOrder	Process	Use	UnitCost	Unit	Quantity	Multiplier	Mult. Val.	Sub Total
10	Machining Setup, Install and remove	Setup for laser cut	$ 1.30	Unit	1			$ 1.30
20	Laser cut		$ 0.01	cm	50	Material - Aluminum	1	$ 0.50
30	Sheet metal bends	Rolling at 90°	$ 0.25	bend	6			$ 1.50
							Sub Total	**$ 3.30**

University	Ecole Centrale de Lyon		Back to BOM	**Car #**	81	**Part Cost**	$ 2.03
System	Engine & Drivetrain	Drawing :	FileLink1			**Qty**	1
Assembly	Fuel System		**FileLink2**	**FileLink1**			
Part	Pressure Regulator Tab		**FileLink3**	**FileLink2**		**Extended Cost**	$ 2.03
P/N Base	EN 04003			**FileLink3**			
Suffix	AA						
Details							

ItemOrder	Material	Use	UnitCost	Size1	Unit1	Size2	Unit2	Area Name	Area	Length	Density	Quantity	Sub Total
10	Steel - Mild	Tab material	$ 2.25	0.013	kg			Rectangular area 20x40 mm	8.00E-04	0.002	7850	1	$ 0.03
												Sub Total	**$ 0.03**

ItemOrder	Process	Use	UnitCost	Unit	Quantity	Multiplier	Mult. Val.	Sub Total
10	Machining Setup, Install and remove	Setup for machining	$ 1.30	Unit	1			$ 1.30
20	Laser cut	Tab cut	$ 0.01	cm	23.4	Material, Steel	3	$ 0.70
							Sub Total	**$ 2.00**

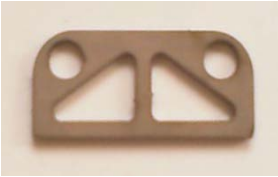

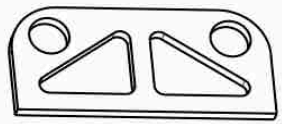

Vue isométrique
Echelle : 1:1

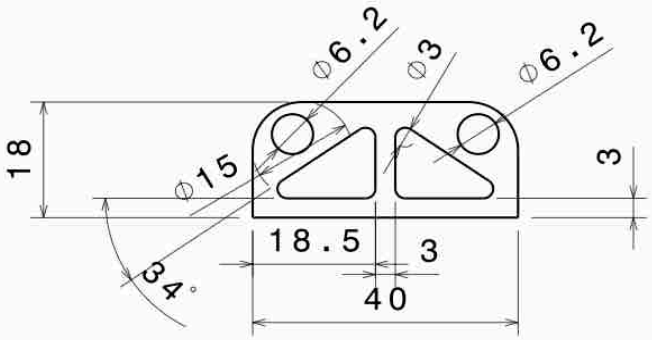

Vue de face
Echelle : 1:1

Tolérances générales ISO 2768 mk
Epaisseur 2 mm

Taille A4		Ecurie Piston Sport Auto
Dessiné par Axel Guittonneau	Date 08/12/2016	Désignation: Chappe régulateur de pression carburant
Coordonnées axel.guittonneau @ecl16.ec-lyon.fr 06 59 89 07 30		Quantité 1 / Matériau Acier S235 / Version 1.0
Plan vérifié par WPE		Echelle 1:1 / No du plan 17_M_037_CHA / Feuille 1/1

University	Ecole Centrale de Lyon		Back to BOM	**Car #**	81	**Part Cost**	$ 1.55
System	Engine & Drivetrain	Drawing :	FileLink1			**Qty**	1
Assembly	Fuel System		**FileLink2**	**FileLink1**			
Part	Fuel Pump Tab		**FileLink3**	**FileLink2**		**Extended Cost**	$ 1.55
P/N Base	EN 04004			**FileLink3**			
Suffix	AA						
Details							

ItemOrder	Material	Use	UnitCost	Size1	Unit1	Size2	Unit2	Area Name	Area	Length	Density	Quantity	Sub Total
10	Steel, Mild	Tab material	$ 2.25	0.005	kg			Rectangular area 15x20 mm	3.00E-04	0.002	7850	1	$ 0.01
												Sub Total	**$ 0.01**

ItemOrder	Process	Use	UnitCost	Unit	Quantity	Multiplier	Mult. Val.	Sub Total
10	Machining Setup, Install and remove	Setup for machining	$ 1.30	Unit	1			$ 1.30
20	Laser cut	Tab cut	$ 0.01	cm	8.06	Material, Steel	3	$ 0.24
							Sub Total	**$ 1.54**

Vue isométrique
Echelle : 1:1

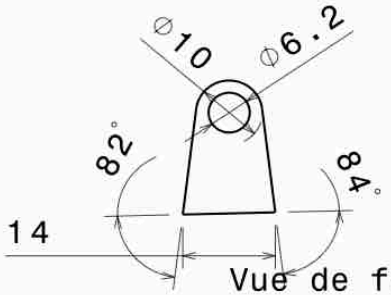

Vue de face
Echelle : 1:1

Epaisseur 2 mm

Tolérances générales ISO 2768mk

Taille A4		Ecurie Piston Sport Auto
Dessiné par Axel Guittonneau	Date 05/12/2016	Désignation chappe pompe carbutant
Coordonnées axel.guittonneau @ecl16.ec-lyon.fr 06 59 89 07 30		Quantité 1 / Matériau Acier S235 / Version 1.0
Plan vérifié par WPE		Echelle 1:1 / No du plan 17_M_036_CHA / Feuille 1/1

University	Ecole Centrale de Lyon	Back to BOM	**Car #**	81	**Asm Cost** $ 107.25
System	Engine & Drivetrain				**Qty** 1
Assembly	Air Intake System		**FileLink1**		
P/N Base	EN A0005		**FileLink2**		**Extended Cost** $ 107.25
Suffix	AA		**FileLink3**		
Details	Air intake assembly				

ItemOrder	Part	Part Cost	Quantity	Sub Total
10	Upper Plenum	$ 18.81	1	$ 18.81
20	Pipes	$ 16.31	1	$ 16.31
30	Plenum Mount	$ 0.75	2	$ 1.49
40	Obstruction Plate	$ 0.85	2	$ 1.70
50	Bottom Plenum	$ 5.48	1	$ 5.48
60	Intake funnel	$ 0.25	4	$ 0.99
			Sub Total	**$ 44.78**

ItemOrder	Material	Use	UnitCost	Size1	Unit1	Size2	Unit2	Area Name	Area	Length	Density	Quantity	Sub Total
10	Hose, Rubber	Rubber brushing	$ 9.00	50	mm							4	$ 36.00
												Sub Total	**$ 36.00**

ItemOrder	Process	Use	UnitCost	Unit	Quantity	Multiplier	Mult. Val.	Sub Total
10	Assemble, 1 kg, Line-on-Line	Assemble pipes and bottom plenum	$ 0.13		1		1	$ 0.13
20	Ratchet <= 6.35 mm	Tighten parts together	$ 0.50		12		1	$ 6.00
30	Reaction Tool <= 6.35 mm	Reaction for process 20	$ 0.25		12		1	$ 3.00
40	Assemble, 1 kg, Line-on-Line	Assemble upper plenum, bottom plenum and intake funnel	$ 0.13		1		1	$ 0.13
50	Ratchet <= 6.35 mm	Tighten parts together	$ 0.50		8		1	$ 4.00
60	Reaction Tool <= 6.35 mm	Reaction for process 50	$ 0.25		8		1	$ 2.00
40	Assemble, 1kg, Interference	Assemble rubber brushing to engine	$ 0.19		4		1	$ 0.75
50	Assemble, 1kg, Loose	Put clamp on brushing	$ 0.06		4		1	$ 0.25
60	Assemble, 1kg, Interference	Assemble pipes to rubber brushing	$ 0.19		4		1	$ 0.75
70	Screwdriver > 1Turn	Tighten hose clamp	$ 0.50		4		1	$ 2.00
80	Power Tool <= 6.35 mm	Tighten Obstruction plates with engine	$ 0.25		4		1	$ 1.00
90	Power Tool <= 6.35 mm	Tighten Plenum mount with Obstruction plates	$ 0.25		2		1	$ 0.50
100	Ratchet <= 6.35 mm	Tighten Plenum mount with pipes	$ 0.50		2		1	$ 1.00
110	Reaction Tool <= 6.35 mm	Reaction for process 100	$ 0.25		2		1	$ 0.50
							Sub Total	**$ 22.00**

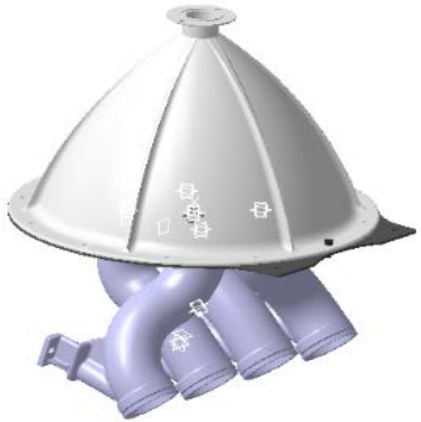

ItemOrder	Fastener	Use	UnitCost	Size1	Unit1	Size2	Unit2	Quantity	Sub Total
10	Bolt, Grade 8.8 (SAE 5)	M4 bolt for process 20	$ 0.02	4	mm	20	mm	12	$ 0.26
20	Nut, Grade 8.8 (SAE 5)	M4 nut for process 20	$ 0.02	4	mm			12	$ 0.24
30	Washer, Grade 8.8 (SAE 5)	M4 washer for process 20	$ 0.01	4	mm			12	$ 0.12
40	Bolt, Grade 8.8 (SAE 5)	M6 bolt for process 80	$ 0.04	6	mm	20	mm	4	$ 0.18
50	Bolt, Grade 8.8 (SAE 5)	M6 bolt for process 90	$ 0.04	6	mm	20	mm	2	$ 0.09
60	Nut, Grade 8.8 (SAE 5)	M6 nut for process 90	$ 0.03	6	mm			2	$ 0.06
70	Washer, Grade 8.8 (SAE 5)	M6 washer for process 90	$ 0.01	6	mm			2	$ 0.02
80	Hose Clamp, Miniature Bolt	Clamp for process 40	$ 0.72	55	mm			4	$ 2.88
90	Bolt, Grade 8.8 (SAE 5)	M6 bolt for process 50	$ 0.04	6	mm	16	mm	8	$ 0.30
100	Nut, Grade 8.8 (SAE 5)	M6 nut for process 50	$ 0.03	6	mm			8	$ 0.24
110	Washer, Grade 8.8 (SAE 5)	M6 washer for process 50	$ 0.01	6	mm			8	$ 0.08
								Sub Total	**$ 4.47**

University	Ecole Centrale de Lyon		Back to BOM	**Car #**	81	**Part Cost**	$ 18.81
System	Engine & Drivetrain	**FileLink1**				**Qty**	1
Assembly	Air Intake System	**FileLink2**		**FileLink1**			
Part	Upper Plenum	**FileLink3**		**FileLink2**		**Extended Cost**	$ 18.81
P/N Base	EN 05001			**FileLink3**			
Suffix	AA						
Details	Made by 3D printing						

ItemOrder	Material	Use	UnitCost	Size1	Unit1	Size2	Unit2	Area Name	Area	Length	Density	Quantity	Sub Total
10	Plastic, Nylon		$ 3.30	0.533	kg							1	$ 1.76
												Sub Total	**$ 1.76**

ItemOrder	Process	Use	UnitCost	Unit	Quantity	Multiplier	Mult. Val.	Sub Total
10	Rapid Prototype - Plastic		$ 32.00	kg	0.533			$ 17.06
							Sub Total	**$ 17.06**

University	Ecole Centrale de Lyon		Back to BOM	**Car #**	81	**Part Cost**	$ 16.31
System	Engine & Drivetrain	**FileLink1**				**Qty**	1
Assembly	Air Intake System	**FileLink2**		**FileLink1**			
Part	Pipes	**FileLink3**		**FileLink2**		**Extended Cost**	$ 16.31
P/N Base	EN 05002			**FileLink3**			
Suffix	AA						
Details	Made by 3D printing						

ItemOrder	Material	Use	UnitCost	Size1	Unit1	Size2	Unit2	Area Name	Area	Length	Density	Quantity	Sub Total
10	Plastic, Nylon		$ 3.30	0.462	kg							1	$ 1.52
												Sub Total	**$ 1.52**

ItemOrder	Process	Use	UnitCost	Unit	Quantity	Multiplier	Mult. Val.	Sub Total
10	Rapid Prototype - Plastic		$ 32.00	kg	0.462			$ 14.78
							Sub Total	**$ 14.78**

University	Ecole Centrale de Lyon			Back to BOM	**Car #**	81	**Part Cost**	$	0.75
System	Engine & Drivetrain	Drawing :	FileLink1				**Qty**		2
Assembly	Air Intake System		**FileLink2**		**FileLink1**				
Part	Plenum Mount		**FileLink3**		**FileLink2**		**Extended Cost**	$	1.49
P/N Base	EN 05003				**FileLink3**				
Suffix	AA								
Details									

ItemOrder	Material	Use	UnitCost	Size1	Unit1	Size2	Unit2	Area Name	Area	Length	Density	Quantity	Sub Total
10	Steel, Mild		$ 2.25	0.027	kg			rectangular area, 115x10 mm	1.15E-03	0.003	7850	1	$ 0.06
												Sub Total	**$ 0.06**

ItemOrder	Process	Use	UnitCost	Unit	Quantity	Multiplier	Mult. Val.	Sub Total
10	Machining Setup, Install and remove		$ 1.30	Unit	1	2 parts cut from a single machine setup	0.5	$ 0.65
20	Laser cut		$ 0.01	cm	1.2	Material - Steel	3	$ 0.04
30	Sheet metal bends		$ 0.25	bend	2			$ 0.50
							Sub Total	**$ 0.69**

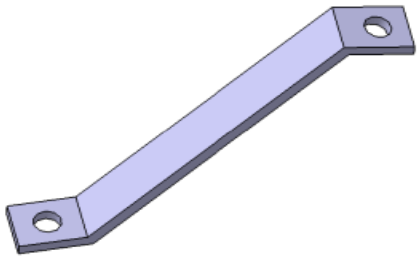

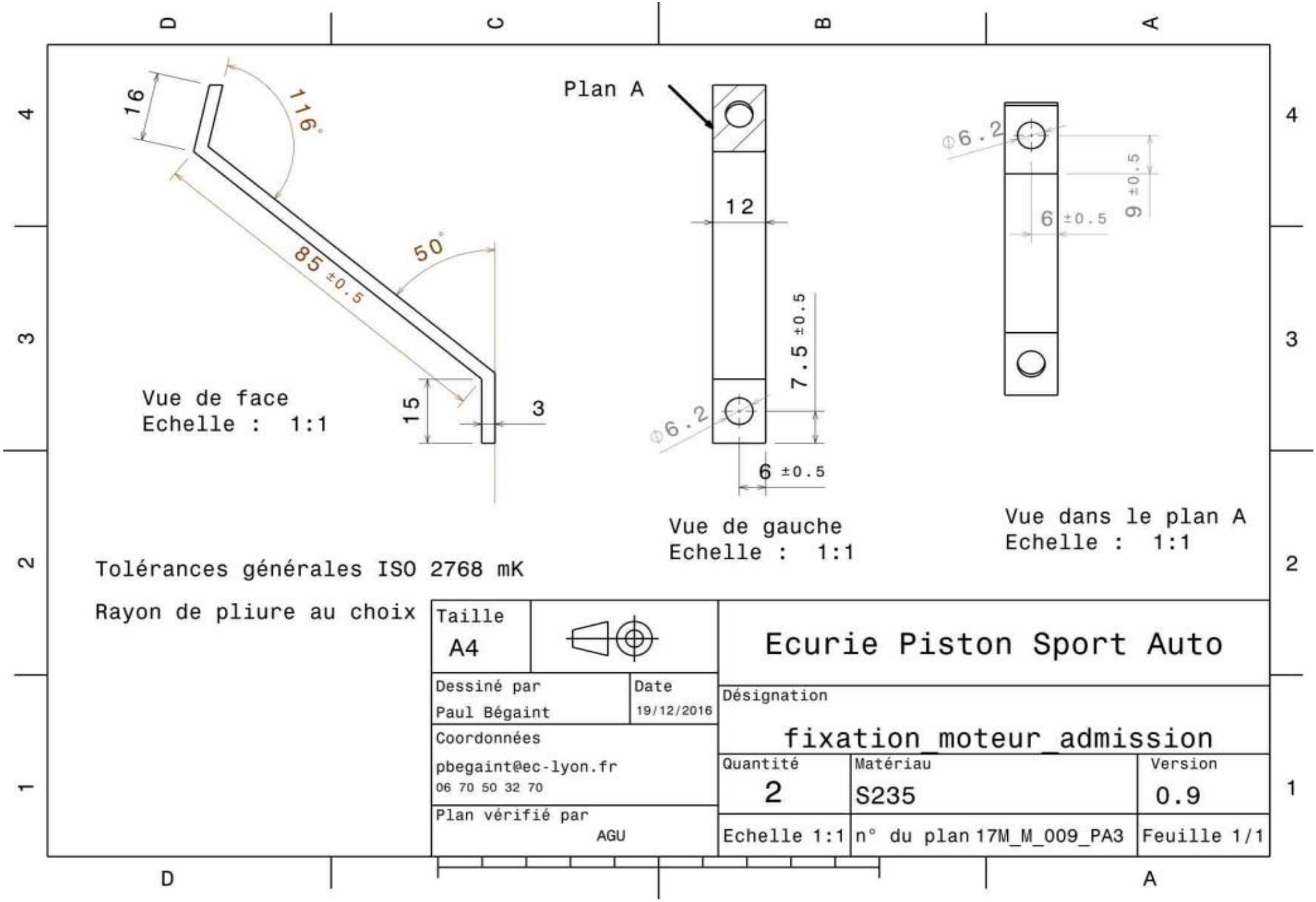
16
116°
85 ±0.5
50°
15
3
Vue de face
Echelle : 1:1
Plan A
12
7.5 ±0.5
⌀6.2
6 ±0.5
Vue de gauche
Echelle : 1:1
⌀6.2
6 ±0.5
9 ±0.5
Vue dans le plan A
Echelle : 1:1
Tolérances générales ISO 2768 mK
Rayon de pliure au choix
Taille
A4
Dessiné par
Paul Bégaint
Date
19/12/2016
Coordonnées
pbegaint@ec-lyon.fr
06 70 50 32 70
Plan vérifié par
AGU
Ecurie Piston Sport Auto
Désignation
fixation_moteur_admission
Quantité
2
Matériau
S235
Version
0.9
Echelle 1:1
n° du plan 17M_M_009_PA3
Feuille 1/1

University	Ecole Centrale de Lyon		Back to BOM	**Car #**	81	**Part Cost**	$ 0.85
System	Engine & Drivetrain	Drawing :	FileLink1			**Qty**	2
Assembly	Air Intake System		**FileLink2**	**FileLink1**			
Part	Obstruction Plate		**FileLink3**	**FileLink2**		**Extended Cost**	$ 1.70
P/N Base	EN 05004			**FileLink3**			
Suffix	AA						
Details	Obstruction of the PAIR valves						

ItemOrder	Material	Use	UnitCost	Size1	Unit1	Size2	Unit2	Area Name	Area	Length	Density	Quantity	Sub Total
10	Aluminum, Normal (per kg)		$ 4.20	0.023	kg			Rectangular area, 80x53 mm	4.24E-03	0.002	2712	1	$ 0.10
												Sub Total	**$ 0.10**

ItemOrder	Process	Use	UnitCost	Unit	Quantity	Multiplier	Mult. Val.	Sub Total
10	Machining Setup, Install and remove		$ 1.30	Unit	1	2 parts cut from a single machine setup	0.5	$ 0.65
20	Laser cut		$ 0.01	cm	10.1		1	$ 0.10
							Sub Total	**$ 0.75**

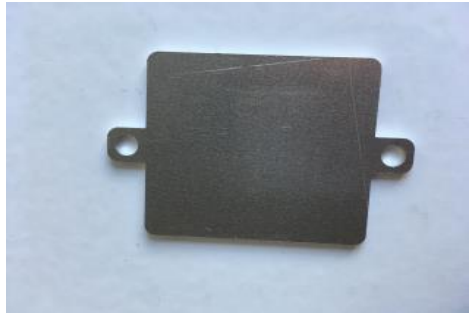

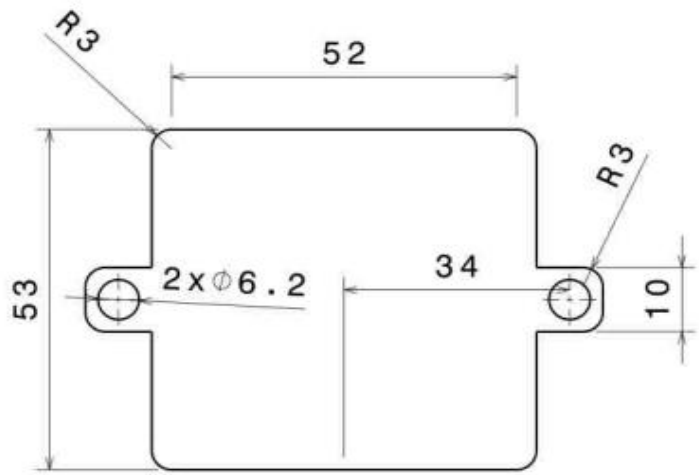

Vue de face
Echelle : 1:1

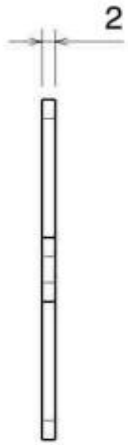

Vue de gauche
Echelle : 1:1

Tolérances générales ISO 2768 mK

Taille A4		Ecurie Piston Sport Auto
Dessiné par Paul Bégaint	Date 19/12/2016	Désignation Plaque PAIR
Coordonnées pbegaint@ec-lyon.fr 06 70 50 32 70		Quantité 2 / Matériau ALu 2017 / Version 1.0
Plan vérifié par AGU		Echelle 1:1 / n° du plan 17M_M_067_PPA / Feuille 1/1

University	Ecole Centrale de Lyon		Back to BOM	**Car #**	81	**Part Cost**	$ 5.48
System	Engine & Drivetrain	Drawing :	FileLink1			**Qty**	1
Assembly	Air Intake System	**FileLink2**		**FileLink1**			
Part	Bottom Plenum	**FileLink3**		**FileLink2**		**Extended Cost**	$ 5.48
P/N Base	EN 05005			**FileLink3**			
Suffix	AA						
Details							

ItemOrder	Material	Use	UnitCost	Size1	Unit1	Size2	Unit2	Area Name	Area	Length	Density	Quantity	Sub Total
10	Aluminum, Normal (per kg)		$ 4.20	0.618	kg			rectangular area, 304x300 mm	9.12E-02	0.0025	2712	1	$ 2.60
												Sub Total	**$ 2.60**

ItemOrder	Process	Use	UnitCost	Unit	Quantity	Multiplier	Mult. Val.	Sub Total
10	Machining Setup, Install and remove		$ 1.30	Unit	1			$ 1.30
20	Laser cut		$ 0.01	cm	158.4		1	$ 1.58
							Sub Total	**$ 2.88**

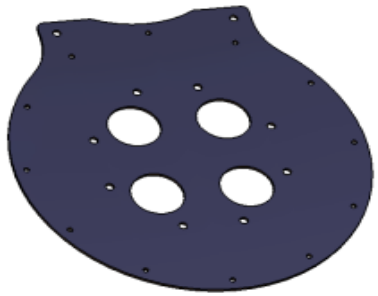

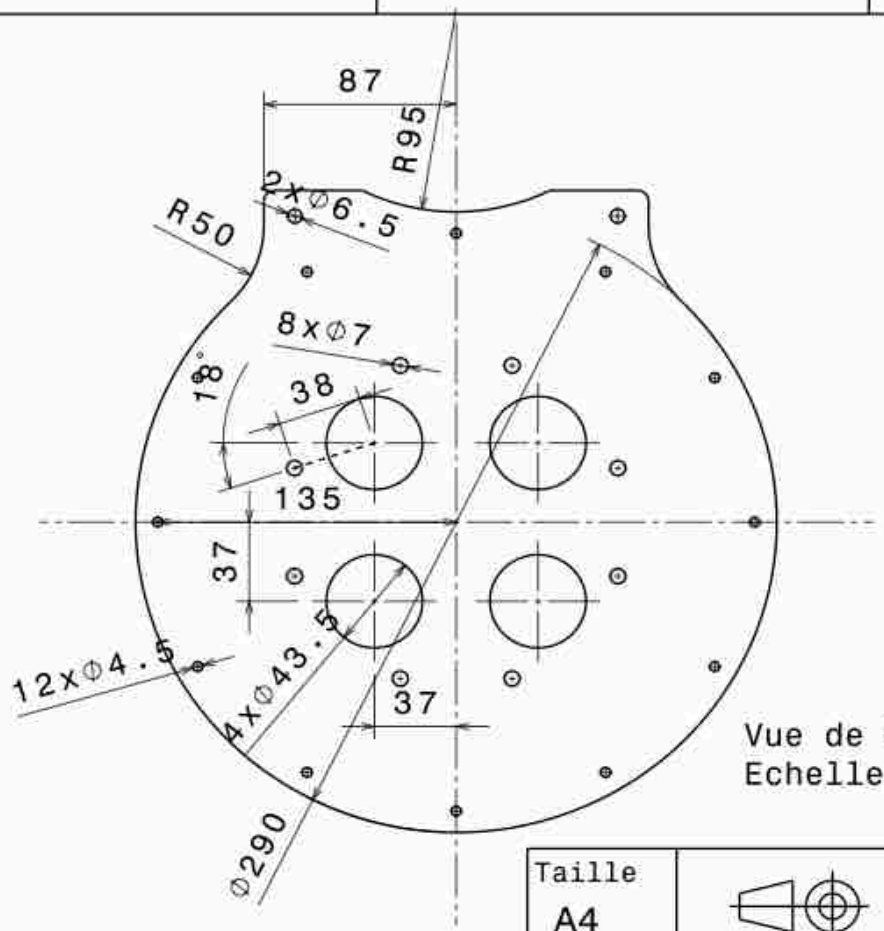

Tolérances ISO 2678mK

EPAISSEUR 2.5mm

Vue de face
Echelle : 1:3

Taille A4		Ecurie Piston Sport Auto
Dessiné par Paul	Date 06/04/2017	Désignation Socle BAA
Coordonnées 06 70 50 32 70 XXX		Quantité 1 / Matériau Alu 2017 / Version 1.0
Plan vérifié par VPY		Echelle 1:3 / N plan 17M_M_300_SOC / Feuille 1/1

University	Ecole Centrale de Lyon		Back to BOM	**Car #**	81	**Part Cost**	$ 0.25
System	Engine & Drivetrain	**FileLink1**				**Qty**	4
Assembly	Air Intake System	**FileLink2**		**FileLink1**			
Part	Intake funnel	**FileLink3**		**FileLink2**		**Extended Cost**	$ 0.99
P/N Base	EN 05006			**FileLink3**			
Suffix	AA						
Details	Made by 3D printing						

ItemOrder	Material	Use	UnitCost	Size1	Unit1	Size2	Unit2	Area Name	Area	Length	Density	Quantity	Sub Total
10	Plastic, Nylon		$ 3.30	0.007	kg							1	$ 0.02
												Sub Total	**$ 0.02**

ItemOrder	Process	Use	UnitCost	Unit	Quantity	Multiplier	Mult. Val.	Sub Total
10	Rapid Prototype - Plastic		$ 32.00	kg	0.007		1	$ 0.22
							Sub Total	**$ 0.22**

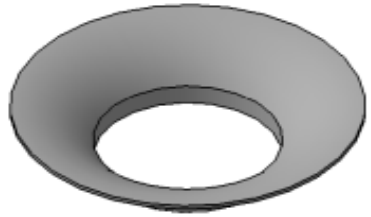

University	Ecole Centrale de Lyon	Back to BOM	**Car #**	81	**Asm Cost** $ 175.57
System	Engine & Drivetrain				**Qty** 1
Assembly	Throttle Body		**FileLink1**		
P/N Base	EN A0006		**FileLink2**		**Extended Cost** $ 175.57
Suffix	AA		**FileLink3**		
Details					

ItemOrder	Part	Part Cost	Quantity	Sub Total
10	Throttle Flange	$ 5.18	1	$ 5.18
20	Restrictor	$ 5.73	1	$ 5.73
30	Throttle Housing	$ 4.28	1	$ 4.28
40	Throttle Axle	$ 2.73	1	$ 2.73
50	TPS Axle	$ 2.71	1	$ 2.71
60	Cable Housing	$ 1.59	1	$ 1.59
70	Axle Stop	$ 2.04	1	$ 2.04
80	Ram Pipe	$ 12.51	1	$ 12.51
90	Throttle Plate	$ 1.49	1	$ 1.49
100	Tabs	$ 0.82	2	$ 1.64
110	Mount 1	$ 0.74	1	$ 0.74
120	Mount 2	$ 0.75	1	$ 0.75
130	Hose Clip	$ 1.76	2	$ 3.53
			Sub Total	**$ 44.90**

ItemOrder	Material	Use	UnitCost	Size1	Unit1	Size2	Unit2	Area Name	Area	Length	Density	Quantity	Sub Total
10	Air filter		$ 0.15	420	cm^2							420	$ 63.00
20	Paint	Tabs painting	$ 10.00	1.05E-03	m^2							1.05E-03	$ 0.01
30	Spring, Tension (General)	Torsion spring	$ 1.00									1	$ 1.00
40	Spring, Tension (General)	Helicoidal spring	$ 1.00									1	$ 1.00
50	Seal, O-ring, Elastomer	Sealing with airfilter	$ 0.05									1	$ 0.05
60	Seal, O-ring, Elastomer	sealing with plenum	$ 0.05									1	$ 0.05
70	Cable, Pull	Throttle cable	$ 15.00	2.5	m							2.5	$ 37.50
80	Cable Adjuster		$ 1.00									1	$ 1.00
90	Mount, Vibration-Damping, Sandwich	Isolation between throttle and chassis	$ 8.10	30	mm							2	$ 16.20
												Sub Total	**$ 119.81**

ItemOrder	Process	Use	UnitCost	Unit	Quantity	Multiplier	Mult. Val.	Sub Total
10	Weld	Tabs welding	$ 0.15	cm	4		1	$ 0.60
20	Aerosol apply	Tabs painting	$ 5.25	m^2	1.05E-03		1	$ 0.01
30	Assemble, 1 kg, Interference	Assemble throttle housing on restrictor	$ 0.19	Unit	1		1	$ 0.19
40	Assemble, 1 kg, Interference	Assemble flange on restrictor	$ 0.19	Unit	1		1	$ 0.19
50	Assemble, 1 kg, Interference	Assemble ram pipe on throttle housing	$ 0.19	Unit	1		1	$ 0.19
60	Assemble, 1 kg, Interference	Assemble throttle plate in restrictor	$ 0.19	Unit	1		1	$ 0.19
70	Assemble, 1 kg, Interference	Assemble TPS axle	$ 0.19	Unit	1		1	$ 0.19
80	Assemble, 1 kg, Interference	Assemble cable housing axle	$ 0.19	Unit	1		1	$ 0.19
90	Assemble, 1 kg, Interference	Assemble negative stop	$ 0.19	Unit	1		1	$ 0.19
100	Ratchet <= 6,35mm	Tighten M5 bolt	$ 0.50	Unit	1		1	$ 0.50
110	Reaction tool <=6,35mm	Reaction tool for M5 nut	$ 0.25	Unit	1		1	$ 0.25
120	Assemble, 1kg, Line-on-line	Assemble torsion spring	$ 0.13	Unit	1		1	$ 0.13
130	Assemble, 1kg, Loose	Assemble axle stop	$ 0.06	Unit	2		1	$ 0.12
140	Ratchet <= 6,35mm	Tighten M5 bolt	$ 0.50	Unit	1		1	$ 0.50
150	Assemble, 1kg, Loose	Assemble seal on throttle body	$ 0.06	Unit	2		1	$ 0.12
160	Assemble, 1kg, Interference	Assemble throttle body on plenum	$ 0.19	Unit	1		1	$ 0.19
170	Ratchet <= 6,35mm	Tighten M6 bolt	$ 0.50	Unit	2		1	$ 1.00
180	Reaction tool <=6,35mm	Reaction tool for M6 nut	$ 0.25	Unit	2		1	$ 0.50

190	Assemble, 1kg, Loose	Assemble air filter and clamp	$ 0.06	Unit	1		1	$ 0.06
200	Screwdriver <1 Turn	Tighten clamp	$ 0.12	Unit	1		1	$ 0.12
210	Assemble, 1kg, Loose	Assemble cable adjuster	$ 0.06	Unit	1		1	$ 0.06
220	Hand, Loose <=6,35mm	Tighten throttle adjuster	$ 0.25	Unit	1		1	$ 0.25
230	Assemble, 1kg, Loose	Assemble cable	$ 0.06	Unit	1		1	$ 0.06
240	Assemble, 1kg, Loose	Assemble hose clip and Mounts	$ 0.06	Unit	1		1	$ 0.06
250	Ratchet <= 6,35mm	Tighten M6 bolt	$ 0.50	Unit	2		1	$ 1.00
260	Reaction tool <=6,35mm	Reaction tool for M6 nut	$ 0.25	Unit	2		1	$ 0.50
270	Assemble, 1kg, Loose	Assemble Vibration-Damping, Mounts and Tabs	$ 0.06	Unit	2		1	$ 0.12
280	Ratchet <= 6,35mm	Tighten M6 bolt	$ 0.50	Unit	2		1	$ 1.00
290	Reaction tool <=6,35mm	Reaction tool for M6 nut	$ 0.25	Unit	2		1	$ 0.50
							Sub Total	**$ 8.96**

ItemOrder	Fastener	Use	UnitCost	Size1	Unit1	Size2	Unit2	Quantity	Sub Total
10	Bolt, Grade 8.8 (SAE 5)	Process 90	$ 0.02	5	mm	10	mm	1	$ 0.02
20	Nut, Grade 8.8 (SAE 5)	Process 90	$ 0.02	5	mm			1	$ 0.02
30	Bolt, Grade 8.8 (SAE 5)	Process 130	$ 0.02	5	mm	10	mm	1	$ 0.02
40	Bolt, Grade 8.8 (SAE 5)	Process 160	$ 0.04	6	mm	16	mm	2	$ 0.08
50	Nut, Grade 8.8 (SAE 5)	Process 160	$ 0.03	6	mm			2	$ 0.06
60	Washer, Grade 8.8 (SAE 5)	Process 160	$ 0.01	6	mm			2	$ 0.02
70	Hose Clamp, Miniature Bolt	Process 190	$ 0.80	75	mm			1	$ 0.80
80	Bolt, Grade 8.8 (SAE 5)	Process 240	$ 0.04	6	mm	16	mm	2	$ 0.08
90	Nut, Grade 8.8 (SAE 5)	Process 240	$ 0.03	6	mm			2	$ 0.06
100	Washer, Grade 8.8 (SAE 5)	Process 240	$ 0.01	6	mm			2	$ 0.02
110	Nut, Grade 8.8 (SAE 5)	Process 270	$ 0.03	6	mm			2	$ 0.06
								Sub Total	**$ 1.24**

ItemOrder	Tooling	Use	UnitCost	Unit	Quantity	PVF	FractionIncluded	Sub Total
10	Welds - Welding Fixture	Tabs welding	$ 500.00	point	4	3000	1	$ 0.67
							Sub Total	**$ 0.67**

University	Ecole Centrale de Lyon		Back to BOM	**Car #**	81	**Part Cost**	$ 5.18
System	Engine & Drivetrain	**FileLink1**				**Qty**	1
Assembly	Throttle Body	**FileLink2**		**FileLink1**			
Part	Throttle Flange	**FileLink3**		**FileLink2**		**Extended Cost**	$ 5.18
P/N Base	EN 06001			**FileLink3**			
Suffix	AA						
Details	Bought, cost as made						

ItemOrder	Material	Use	UnitCost	Size1	Unit1	Size2	Unit2	Area Name	Area	Length	Density	Quantity	Sub Total
10	Aluminium, Normal	Stock material for part	$ 4.20	0.174	kg			Rectangular area, 40*20mm	8.00E-04	0.080	2712	1	$ 0.73
												Sub Total	**$ 0.73**

ItemOrder	Process	Use	UnitCost	Unit	Quantity	Multiplier	Mult. Val.	Sub Total
10	Machining Setup, Install and remove		$ 1.30	Unit	1			$ 1.30
20	Drillet holes <25,4mm dia.		$ 0.35	hole	5			$ 1.75
30	Machining		$ 0.04	cm^3	35	Aluminium	1	$ 1.40
							Sub Total	**$ 4.45**

University	Ecole Centrale de Lyon		Back to BOM	**Car #**	81	**Part Cost**	$ 5.73
System	Engine & Drivetrain	**FileLink1**				**Qty**	1
Assembly	Throttle Body	**FileLink2**		**FileLink1**			
Part	Restrictor	**FileLink3**		**FileLink2**		**Extended Cost**	$ 5.73
P/N Base	EN 06002			**FileLink3**			
Suffix	AA						
Details	Bought, cost as made						

ItemOrder	Material	Use	UnitCost	Size1	Unit1	Size2	Unit2	Area Name	Area	Length	Density	Quantity	Sub Total
10	Aluminium, Normal		$ 4.20	0.376	kg			Round diam 42mm	1.38E-03	0.100	2712	1	$ 1.58
												Sub Total	**$ 1.58**

ItemOrder	Process	Use	UnitCost	Unit	Quantity	Multiplier	Mult. Val.	Sub Total
10	Machining Setup, Install and remove		$ 1.30	Unit	1			$ 1.30
20	Machining	Cutout shape	$ 0.04	cm^3	35	Material - Aluminium	1	$ 1.40
30	Machining setup, change		$ 0.65	Unit	1			$ 0.65
40	Machining		$ 0.04	cm^3	20	Material - Aluminium	1	$ 0.80
							Sub Total	**$ 4.15**

University	Ecole Centrale de Lyon		Back to BOM	**Car #**	81	**Part Cost**	$ 4.28
System	Engine & Drivetrain	**FileLink1**				**Qty**	1
Assembly	Throttle Body	**FileLink2**		**FileLink1**			
Part	Throttle Housing	**FileLink3**		**FileLink2**		**Extended Cost**	$ 4.28
P/N Base	EN 06003			**FileLink3**			
Suffix	AA						
Details	Bought, cost as made						

ItemOrder	Material	Use	UnitCost	Size1	Unit1	Size2	Unit2	Area Name	Area	Length	Density	Quantity	Sub Total
10	Aluminium, Normal		$ 4.20	0.201	kg			Rectangular area, 45*30mm	1.35E-03	0.06	2712	1	$ 0.85
												Sub Total	**$ 0.85**

ItemOrder	Process	Use	UnitCost	Unit	Quantity	Multiplier	Mult. Val.	Sub Total
10	Machining setup, install and remove		$ 1.30	Unit	1			$ 1.30
20	Machining		$ 0.04	cm^3	28	Material - Aluminium	1	$ 1.12
30	Machining Setup, Change		$ 0.65	Unit	1			$ 0.65
40	Machining		$ 0.04	cm^3	9	Material - Aluminium	1	$ 0.36
							Sub Total	**$ 3.43**

University	Ecole Centrale de Lyon		Back to BOM	**Car #**	81	**Part Cost**	$ 2.73
System	Engine & Drivetrain	**FileLink1**				**Qty**	1
Assembly	Throttle Body	**FileLink2**		**FileLink1**			
Part	Throttle Axle	**FileLink3**		**FileLink2**		**Extended Cost**	$ 2.73
P/N Base	EN 06004			**FileLink3**			
Suffix	AA						
Details	Bought, cost as made						

ItemOrder	Material	Use	UnitCost	Size1	Unit1	Size2	Unit2	Area Name	Area	Length	Density	Quantity	Sub Total
10	Steel, Mild	Axle material	$ 2.25	0.025	kg			Round 10mm	7.85E-05	0.040	7850	1	$ 0.06
												Sub Total	**$ 0.06**

ItemOrder	Process	Use	UnitCost	Unit	Quantity	Multiplier	Mult. Val.	Sub Total
10	Machining Setup, Install and remove		$ 1.30	Unit	1			$ 1.30
20	Machining		$ 0.04	cm^3	4	Material, Steel	3	$ 0.48
30	Machining Setup, Change	Setup part for machining of the back face	$ 0.65	Unit	1			$ 0.65
40	Machining	Machining of the back face	$ 0.04	cm^3	2	Material, Steel	3	$ 0.24
							Sub Total	**$ 2.67**

University	Ecole Centrale de Lyon		Back to BOM	**Car #**	81	**Part Cost**	$ 2.71
System	Engine & Drivetrain	**FileLink1**				**Qty**	1
Assembly	Throttle Body	**FileLink2**		**FileLink1**			
Part	TPS Axle	**FileLink3**		**FileLink2**		**Extended Cost**	$ 2.71
P/N Base	EN 06005			**FileLink3**			
Suffix	AA						
Details	Bought, cost as made						

ItemOrder	Material	Use	UnitCost	Size1	Unit1	Size2	Unit2	Area Name	Area	Length	Density	Quantity	Sub Total
10	Steel, Mild	Axle material	$ 2.25	0.018	kg			Round 10mm	7.85E-05	0.030	7850	1	$ 0.04
												Sub Total	**$ 0.04**

ItemOrder	Process	Use	UnitCost	Unit	Quantity	Multiplier	Mult. Val.	Sub Total
10	Machining Setup, Install and remove		$ 1.30	Unit	1			$ 1.30
20	Machining		$ 0.04	cm^3	4	Material, Steel	3	$ 0.48
30	Machining Setup, Change	Setup part for machining of the back face	$ 0.65	Unit	1			$ 0.65
40	Machining	Machining of the back face	$ 0.04	cm^3	2	Material, Steel	3	$ 0.24
							Sub Total	**$ 2.67**

University	Ecole Centrale de Lyon		Back to BOM	**Car #**	81	**Part Cost**	$ 1.59
System	Engine & Drivetrain	**FileLink1**				**Qty**	1
Assembly	Throttle Body	**FileLink2**		**FileLink1**			
Part	Cable Housing	**FileLink3**		**FileLink2**		**Extended Cost**	$ 1.59
P/N Base	EN 06006			**FileLink3**			
Suffix	AA						
Details	Bought, cost as made						

ItemOrder	Material	Use	UnitCost	Size1	Unit1	Size2	Unit2	Area Name	Area	Length	Density	Quantity	Sub Total
10	Steel, Mild		$ 2.25	0.075	kg			Rectangular area, 60 x 2mm	1.20E-04	0.080	7850	1	$ 0.17
												Sub Total	**$ 0.17**

ItemOrder	Process	Use	UnitCost	Unit	Quantity	Multiplier	Mult. Val.	Sub Total
10	Machining Setup, Install and remove		$ 1.30	Unit	1			$ 1.30
20	Laser cut		$ 0.01	cm	35	Material - Steel	3	$ 1.05
30	Sheet metal bends		$ 0.25	bend	3			$ 0.75
40	Weld		$ 0.15	cm	2			$ 0.30
							Sub Total	**$ 1.42**

University	Ecole Centrale de Lyon		Back to BOM	**Car #**	81	**Part Cost**	$ 2.04
System	Engine & Drivetrain	**FileLink1**				**Qty**	1
Assembly	Throttle Body	**FileLink2**		**FileLink1**			
Part	Axle Stop	**FileLink3**		**FileLink2**		**Extended Cost**	$ 2.04
P/N Base	EN 06007			**FileLink3**			
Suffix	AA						
Details	Bought, cost as made						

ItemOrder	Material	Use	UnitCost	Size1	Unit1	Size2	Unit2	Area Name	Area	Length	Density	Quantity	Sub Total
10	Steel, Mild		$ 2.25	0.116	kg			Round 25mm diam	4.91E-04	0.030	7850	1	$ 0.26
												Sub Total	**$ 0.26**

ItemOrder	Process	Use	UnitCost	Unit	Quantity	Multiplier	Mult. Val.	Sub Total
10	Machining Setup, Install and remove		$ 1.30	Unit	1			$ 1.30
20	Machining		$ 0.04	cm^3	4	Material, Steel	3	$ 0.48
							Sub Total	**$ 1.78**

University	Ecole Centrale de Lyon		Back to BOM	**Car #**	81	**Part Cost**	$ 12.51
System	Engine & Drivetrain	**FileLink1**				**Qty**	1
Assembly	Throttle Body	**FileLink2**		**FileLink1**			
Part	Ram Pipe	**FileLink3**		**FileLink2**		**Extended Cost**	$ 12.51
P/N Base	EN 06008			**FileLink3**			
Suffix	AA						
Details	Bought, cost as made						

ItemOrder	Material	Use	UnitCost	Size1	Unit1	Size2	Unit2	Area Name	Area	Length	Density	Quantity	Sub Total
10	Aluminium, Normal		$ 4.20	0.954	kg			Round 80mm diam	5.03E-03	0.070	2712	1	$ 4.01
												Sub Total	**$ 4.01**

ItemOrder	Process	Use	UnitCost	Unit	Quantity	Multiplier	Mult. Val.	Sub Total
10	Machining Setup, Install and remove		$ 1.30	Unit	1			$ 1.30
20	Machining		$ 0.04	cm^3	180	Material - Aluminium	1	$ 7.20
							Sub Total	**$ 8.50**

University	Ecole Centrale de Lyon		Back to BOM	**Car #**	81	**Part Cost**	$ 1.49
System	Engine & Drivetrain	**FileLink1**				**Qty**	1
Assembly	Throttle Body	**FileLink2**		**FileLink1**			
Part	Throttle Plate	**FileLink3**		**FileLink2**		**Extended Cost**	$ 1.49
P/N Base	EN 06009			**FileLink3**			
Suffix	AA						
Details	Bought, cost as made						

ItemOrder	Material	Use	UnitCost	Size1	Unit1	Size2	Unit2	Area Name	Area	Length	Density	Quantity	Sub Total
10	Steel, Mild		$ 2.25	0.032	kg			Round 32mm diam	8.04E-04	0.005	7850	1	$ 0.07
												Sub Total	**$ 0.07**

ItemOrder	Process	Use	UnitCost	Unit	Quantity	Multiplier	Mult. Val.	Sub Total
10	Machining Setup, Install and remove		$ 1.30	Unit	1			$ 1.30
20	Machining		$ 0.04	cm^3	1	Material, Steel	3	$ 0.12
							Sub Total	**$ 1.42**

University	Ecole Centrale de Lyon		Back to BOM	**Car #**	81	**Part Cost**	$	0.82
System	Engine & Drivetrain	Drawing :	FileLink1			**Qty**		2
Assembly	Throttle Body		**FileLink2**	**FileLink1**				
Part	Tabs		**FileLink3**	**FileLink2**		**Extended Cost**	$	1.64
P/N Base	EN 06010			**FileLink3**				
Suffix	AA							
Details								

ItemOrder	Material	Use	UnitCost	Size1	Unit1	Size2	Unit2	Area Name	Area	Length	Density	Quantity	Sub Total
10	Steel, Mild		$ 2.25	0.005	kg			Rectangular area, 17x12 mm	2.04E-04	0.003	7850	1	$ 0.01
												Sub Total	**$ 0.01**

ItemOrder	Process	Use	UnitCost	Unit	Quantity	Multiplier	Mult. Val.	Sub Total
10	Machining Setup, Install and remove	Setup for laser cut	$ 1.30	Unit	1	2 parts cut from a single machine setup	0.5	$ 0.65
20	Laser cut	Outlines	$ 0.01	cm	5.28	Material - Steel	3	$ 0.16
							Sub Total	**$ 0.81**

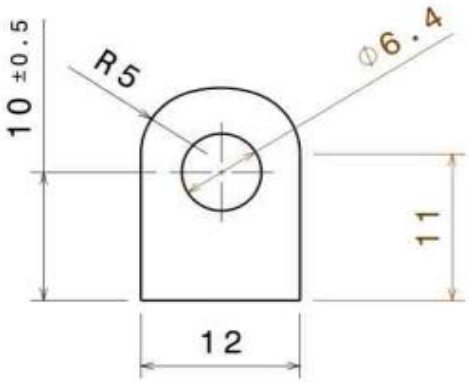

Vue de face
Echelle : 2:1

Vue de face
Echelle : 1:1

Vue de gauche
Echelle : 1:1

Tolérances générales ISO 2768 mK

Taille A4		Ecurie Piston Sport Auto	
Dessiné par Paul Bégaint	Date 08/12/2016	Désignation Fixation bride-chassis	
Coordonnées 06 70 50 32 70 pbegaint@ec-lyon.fr		Quantité 2	Matériau S235	Version 1.0
Plan vérifié par VPY		Echelle 1:1	N° du plan 17M_M_006_CHP	Feuille 1/1

University	Ecole Centrale de Lyon			Back to BOM	**Car #**	81	**Part Cost**	$	0.74
System	Engine & Drivetrain	Drawing :	FileLink1				**Qty**		1
Assembly	Throttle Body		**FileLink2**		**FileLink1**				
Part	Mount 1		**FileLink3**		**FileLink2**		**Extended Cost**	$	0.74
P/N Base	EN 06011				**FileLink3**				
Suffix	AA								
Details									

ItemOrder	Material	Use	UnitCost	Size1	Unit1	Size2	Unit2	Area Name	Area	Length	Density	Quantity	Sub Total
10	Aluminium, Normal		$ 4.20	0.009	kg			Rectangular area, 86x10 mm	8.60E-04	0.004	2712	1	$ 0.04
												Sub Total	**$ 0.04**

ItemOrder	Process	Use	UnitCost	Unit	Quantity	Multiplier	Mult. Val.	Sub Total
10	Drilled holes	holes	$ 0.35	hole	2		1	$ 0.70
							Sub Total	**$ 0.70**

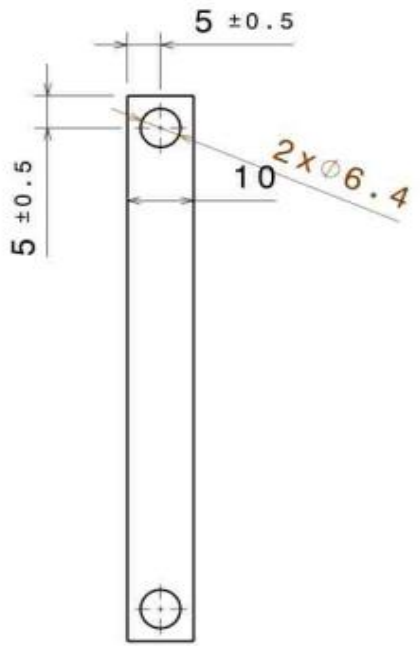

Vue de face
Echelle : 1:1

Vue de gauche
Echelle : 1:1

Tolérances générales ISO 2768 mK

Taille A4		Ecurie Piston Sport Auto
Dessiné par Paul	Date 19/12/2016	Désignation fixation chassis patte 1
Coordonnées pbegaint@ec-lyon.fr 06 70 50 32 70		Quantité 1 / Matériau Alu 2017 / Version 1.0
Plan vérifié par AGU		Echelle 1:1 / n° du plan 17M_M_007_PA1 / Feuille 1/1

University	Ecole Centrale de Lyon			Back to BOM	**Car #**	81	**Part Cost**	$	0.75
System	Engine & Drivetrain	Drawing :	FileLink1				**Qty**		1
Assembly	Throttle Body		**FileLink2**		**FileLink1**				
Part	Mount 2		**FileLink3**		**FileLink2**		**Extended Cost**	$	0.75
P/N Base	EN 06012				**FileLink3**				
Suffix	AA								
Details									

ItemOrder	Material	Use	UnitCost	Size1	Unit1	Size2	Unit2	Area Name	Area	Length	Density	Quantity	Sub Total
10	Aluminium, Normal		$ 4.20	0.012	kg			Rectangular area, 109x10 mm	1.09E-03	0.004	2712	1	$ 0.05
												Sub Total	**$ 0.05**

ItemOrder	Process	Use	UnitCost	Unit	Quantity	Multiplier	Mult. Val.	Sub Total
10	Drilled holes	holes	$ 0.35	hole	2		1	$ 0.70
							Sub Total	**$ 0.70**

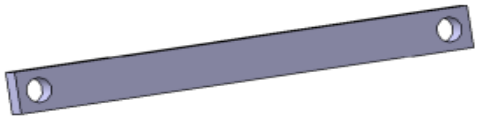

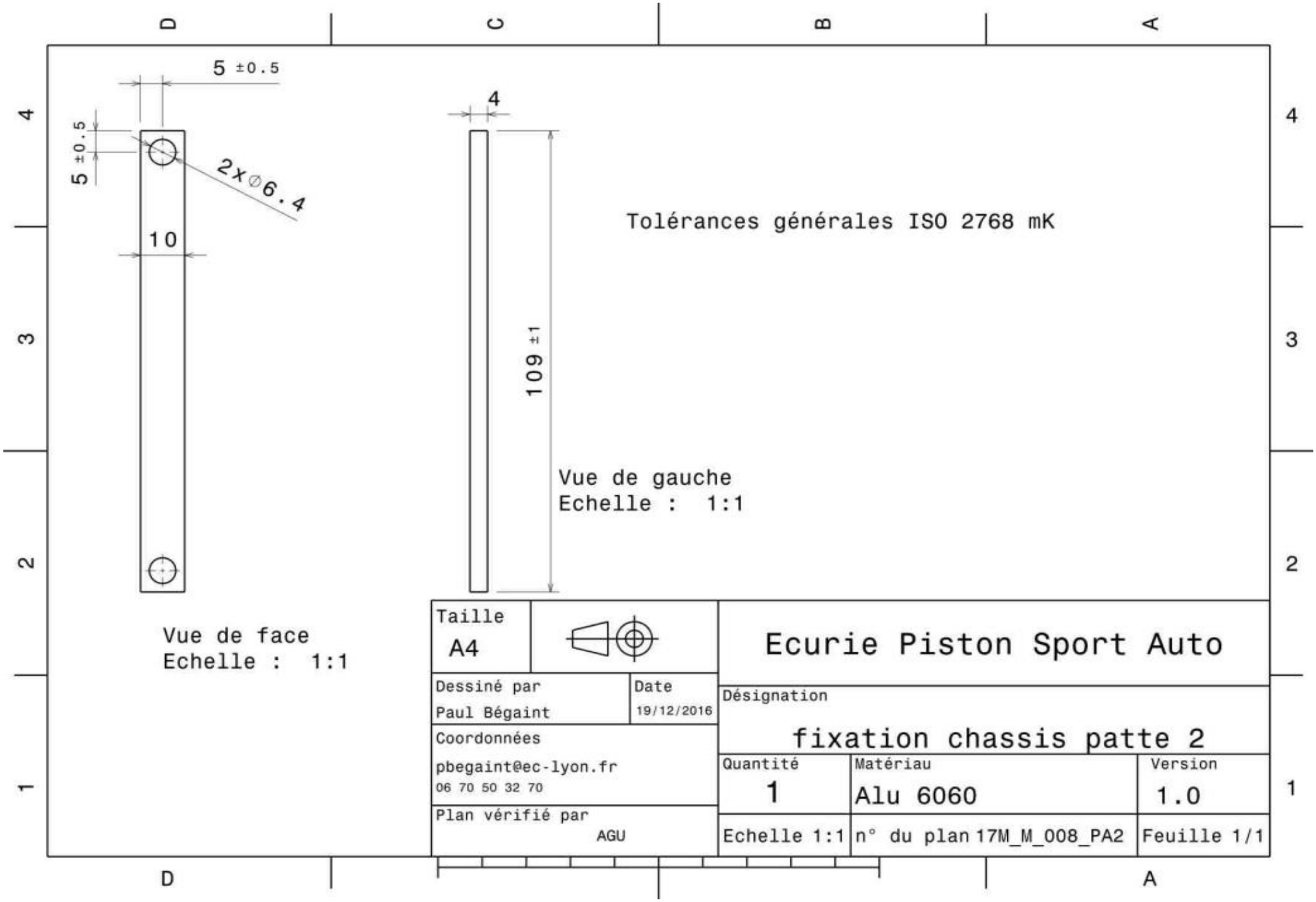
5 ±0.5
5 ±0.5
2x⌀6.4
10
4
109 ±1
Tolérances générales ISO 2768 mK
Vue de gauche
Echelle : 1:1
Vue de face
Echelle : 1:1
Taille
A4
Ecurie Piston Sport Auto
Dessiné par
Paul Bégaint
Date
19/12/2016
Désignation
fixation chassis patte 2
Coordonnées
pbegaint@ec-lyon.fr
06 70 50 32 70
Quantité
1
Matériau
Alu 6060
Version
1.0
Plan vérifié par
AGU
Echelle 1:1
n° du plan 17M_M_008_PA2
Feuille 1/1

University	Ecole Centrale de Lyon			Back to BOM	**Car #**	81	**Part Cost**	$	1.76
System	Engine & Drivetrain	Drawing :	FileLink1				**Qty**		2
Assembly	Throttle Body		**FileLink2**		**FileLink1**				
Part	Hose Clip		**FileLink3**		**FileLink2**		**Extended Cost**	$	3.53
P/N Base	EN 06013				**FileLink3**				
Suffix	AA								
Details									

ItemOrder	Material	Use	UnitCost	Size1	Unit1	Size2	Unit2	Area Name	Area	Length	Density	Quantity	Sub Total
10	Aluminium, Normal		$ 4.20	0.015	kg			Rectangular area, 100x14 mm	1.40E-03	0.004	2712	1	$ 0.06
												Sub Total	**$ 0.06**

ItemOrder	Process	Use	UnitCost	Unit	Quantity	Multiplier	Mult. Val.	Sub Total
10	Drilled holes	holes	$ 0.35	hole	2		1	$ 0.70
20	Sheet metal bends	bend	$ 0.25	bend	4		1	$ 1.00
							Sub Total	**$ 1.70**

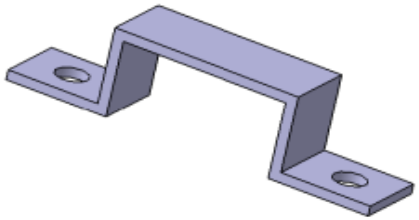

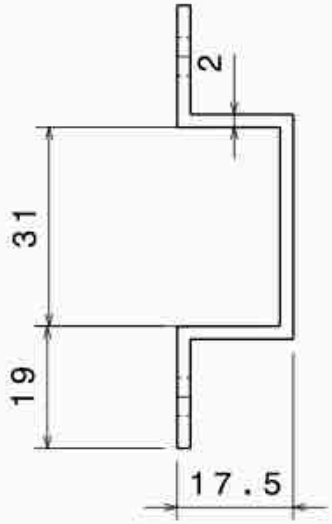

Vue de face
Echelle : 1:1

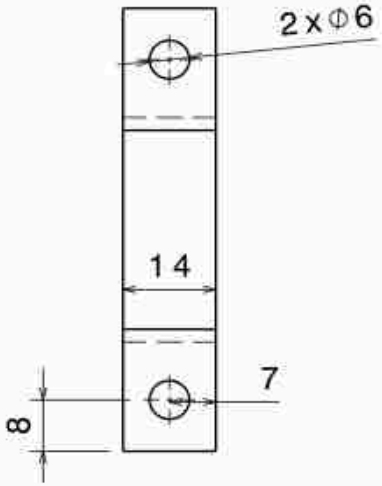

Vue de gauche
Echelle : 1:1

Tolérances générales ISO 2768mK

Taille A4		Ecurie Piston Sport Auto
Dessiné par Paul Bégaint	Date 07/03/2017	Désignation Collier de serrage bride
Coordonnées pbegaint@ec-lyon.fr 06 70 50 32 70		Quantité 2 / Matériau Alu 2017 T4 / Version 3.0
Plan vérifié par AGU		Echelle 1:1 / N°du plan 17M_M_010_COL / Feuille 1/1

University	Ecole Centrale de Lyon	Back to BOM	**Car #**	81	**Asm Cost** $ 66.85
System	Engine & Drivetrain				**Qty** 1
Assembly	Overflow Bottles		**FileLink1**		
P/N Base	EN A0007		**FileLink2**		**Extended Cost** $ 66.85
Suffix	AA		**FileLink3**		
Details	Oil and Water catch cans, mounted on the frame				

ItemOrder	Material	Use	UnitCost	Size1	Unit1	Size2	Unit2	Area Name	Area	Length	Density	Quantity	Sub Total
10	Overflow Bottle, Steel Oil Can	Painting cans	$ 1.00		Unit							2	$ 2.00
20	Hose, Low Pressure, Stainless Steel Braided Outer	Lines from Engine's top and Expansion tank to overflow bottles	$ 34.74	14	mm							1.5	$ 52.11
30	Paint	Black bottle paint	$ 10.00	0.192	m^2							0.192	$ 1.92
40	Hose, Silicone	from Engines's top and Expansion tank to Stainless Steel Braided Outer	$ 6.58	14	mm							0.15	$ 0.99
												Sub Total	**$ 57.02**

ItemOrder	Process	Use	UnitCost	Unit	Quantity	Multiplier	Mult. Val.	Sub Total
10	Cut (scissors, knife)	Carbon fiber strips cut	$ 0.06	Unit	2			$ 0.12
20	Drilled holes < 25.4 mm dia.	Drill the carbon fiber strips, diam 8	$ 0.35	hole	4			$ 1.40
30	Assemble, 1kg, Interference	Bend carbon fiber strips around the 2 cans	$ 0.19	Unit	2			$ 0.38
40	Ratchet <= 25.4 mm	Tighten the carbon fiber strips around the cans	$ 0.75	Unit	2			$ 1.50
50	Reaction Tool <= 25.4 mm	Tighten the carbon fiber strips around the cans	$ 0.25	Unit	2			$ 0.50
60	Drilled holes < 25.4 mm dia.	Bottles drilling for hoses	$ 0.35	hole	3			$ 1.05
70	Cut (scissors, knife)	Hoses cut	$ 0.06	Unit	3			$ 0.18
80	Screwdriver > 1 Turn	Clamps installation on the frame	$ 0.50	Unit	2			$ 1.00
90	Assemble, 1kg, Interference	Hose mounting on Bottles, Engine and Expansion tank	$ 0.19	Unit	5			$ 0.95
							Sub Total	**$ 7.08**

ItemOrder	Fastener	Use	UnitCost	Size1	Unit1	Size2	Unit2	Quantity	Sub Total
10	Hose Clamp, Single Wire	Engine and Expansion tank clamp	$ 0.08	14	mm			4	$ 0.30
20	Steel Loop Straps, Rubber-Cushioned	Attach on the bottom frame pipe	$ 0.36	35	mm			2	$ 0.72
30	Bolt, Aluminum	M4 bolt to Tighten the collars around the frame	$ 0.03	4	mm	20	mm	2	$ 0.06
40	Nut, Grade 8.8 (SAE 5)	M6 nut for collar on collar mount	$ 0.02	4	mm			2	$ 0.04
50	Bolt, Aluminum	100 mm M8 Bolt	$ 0.67	8	mm	100	mm	2	$ 1.35
60	Nut, Grade 8.8 (SAE 5)	M8 Bolt	$ 0.04	8	mm			6	$ 0.27
70	Washer, Grade 8.8 (SAE 5)	M4 washers to tighten the collars around the frame	$ 0.01					1	$ 0.01
								Sub Total	**$ 2.75**

University	Ecole Centrale de Lyon	Back to BOM	**Car #**	81	**Asm Cost** $ 230.64
System	Engine & Drivetrain				**Qty** 1
Assembly	Cooling System		**FileLink1**		
P/N Base	EN A0008		**FileLink2**		**Extended Cost** $ 230.64
Suffix	AA		**FileLink3**		
Details	Engine cooling system				

ItemOrder	Part	Part Cost	Quantity	Sub Total
10	Radiator	$ 32.02	1	$ 32.02
20	Radiator lateral upper tab	$ 1.92	1	$ 1.92
30	Radiator lateral lower tab	$ 2.59	1	$ 2.59
40	Radiator back tab	$ 1.98	1	$ 1.98
50	Main Coolant Line	$ 31.04	1	$ 31.04
60	Fan	$ 30.77	1	$ 30.77
70	Expansion Tank	$ 20.95	1	$ 20.95
80	Expansion Tank tab	$ 1.54	1	$ 1.54
90	Lateral Tube	$ 1.63	1	$ 1.63
100	Flow Rectifier	$ 42.36	1	$ 42.36
110	Secondary Coolant Line	$ 15.48	1	$ 15.48
			Sub Total	**$ 182.28**

ItemOrder	Material	Use	UnitCost	Size1	Unit1	Size2	Unit2	Area Name	Area	Length	Density	Quantity	Sub Total
10	Mount, Vibration-Damping Sandwich		$ 4.05	15	mm							2	$ 8.10
20	Mount, Vibration-Damping Sandwich		$ 6.75	25	mm							2	$ 13.50
30	Paint	Tab painting	$ 10.00	0.012	m^2							0.012	$ 0.12
30	Fluid, coolant	Cooling water	$ -	2.5	L							1	$ -
												Sub Total	**$ 21.72**

ItemOrder	Process	Use	UnitCost	Unit	Quantity	Multiplier	Mult. Val.	Sub Total
10	Weld	Upper Lateral tab to Radiator Frame	$ 0.15	cm	2.5		1	$ 0.38
20	Weld	Lower Lateral tab to Radiator Frame	$ 0.15	cm	3		1	$ 0.45
30	Weld	Back tab to Radiator Frame	$ 0.15	cm	3		1	$ 0.45
40	Aerosol apply	Tab painting	$ 5.25	m^2	0.012		1	$ 0.07
50	Assemble, 1kg, Loose	Assemble Vibration-Damping Sandwich with tabs	$ 0.06	Unit	4		1	$ 0.24
60	Assemble, 1kg, Loose	Nut for vibration damping sandwiches	$ 0.06	Unit	4		1	$ 0.24
70	Ratchet <= 25.4 mm	Nut for vibration damping sandwiches	$ 0.75	Unit	4		1	$ 3.00
80	Assemble, 3 kg, Interference	Set Flux Rectifier to Radiator	$ 0.56	Unit	1			$ 0.56
90	Assemble, 3kg, Line-on-line	Set Radiator to Vibration-Damping Sandwiches	$ 0.38	Unit	1		1	$ 0.38
100	Ratchet <= 25.4 mm	Nuts for vibration damping sandwiches	$ 0.75	Unit	4		1	$ 3.00
110	Reaction tool <= 25.4 mm	Nuts for vibration damping sandwiches	$ 0.50	Unit	4		1	$ 2.00
120	Assemble, 1kg, Line-on-Line	Assemble lateral bar with lateral tabs and radiator	$ 0.13	Unit	2		1	$ 0.26
130	Assemble, 1 kg, Loose	Nut for lateral bar	$ 0.06	Unit	2		1	$ 0.12
140	Ratchet <= 25.4 mm	Nut for lateral bar	$ 0.75	Unit	2		1	$ 1.50
150	Reaction tool <= 25.4 mm	Nut for lateral bar	$ 0.25	Unit	2		1	$ 0.50
160	Assemble, 1 kg, Loose	Set Expansion Tank to tabs	$ 0.06	Unit	1		1	$ 0.06
170	Assemble, 1 kg, Loose	Bolt for Expansion Tank	$ 0.06	Unit	1		1	$ 0.06
180	Assemble, 1 kg, Loose	Nut for Expansion Tank	$ 0.06	Unit	1		1	$ 0.06
190	Ratchet <= 25.4 mm	Nut for Expansion Tank	$ 0.75	Unit	1		1	$ 0.75
200	Reaction tool <= 25.4 mm	Nut for Expansion Tank	$ 0.25	Unit	1		1	$ 0.25
210	Assemble, 1 kg, Interference	Assemble main Cooling Lines with radiator	$ 0.19	Unit	2		1	$ 0.38
220	Assemble, 1 kg, Interference	Assemble secondary Cooling Lines with Expansion Tank and Fluid recuperator	$ 0.19	Unit	2		1	$ 0.38
230	Ratchet <= 6.35 mm	Bolt Hose Clamp	$ 0.50	Unit	4		1	$ 2.00
							Sub Total	**$ 17.08**

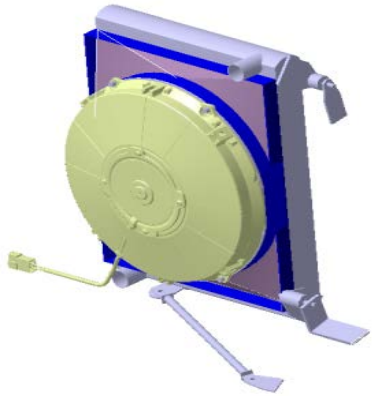

ItemOrder	Fastener	Use	UnitCost	Size1	Unit1	Size2	Unit2	Quantity	Sub Total
10	Bolt, Grade 8.8 (SAE 5)	M6 Bolt for fittings and radiator	$ 0.05	3	mm	25	mm	4	$ 0.20
20	Nut, Grade 8.8 (SAE 5)	M6 nuts for lateral bar, tabs and radiator	$ 0.03	6	mm			8	$ 0.24
30	Hose Clamp, Miniature Bolt	Main Cooling Line Hose Clamp	$ 0.60	25.4	mm			2	$ 1.20
40	Hose Clamp, Miniature Bolt	Secondary Cooling Line Hose Clamp	$ 0.55	12	mm			2	$ 1.10
50	Hose Clamp, Miniature Bolt	Main line hose clamp	$ 0.60	25.4	mm			9	$ 5.41
60	Pin, Plastic Push	Set Fan to Radiator	$ 0.10	4	unit			4	$ 0.40
								Sub Total	**$ 8.55**

ItemOrder	Tooling	Use	UnitCost	Unit	Quantity	PVF	FractionIncluded	Sub Total
10	Welds - Welding Fixture Tabs	Tabs welding	$ 500.00	Point	6	3000	1	$ 1.00
							Sub Total	**$ 1.00**

University	Ecole Centrale de Lyon		Back to BOM	**Car #**	81	**Part Cost**	$ 32.02
System	Engine & Drivetrain	**FileLink1**				**Qty**	1
Assembly	Cooling System	**FileLink2**		**FileLink1**			
Part	Radiator	**FileLink3**		**FileLink2**		**Extended Cost**	$ 32.02
P/N Base	EN 08001			**FileLink3**			
Suffix	AA						
Details	Bought, cost as made						

ItemOrder	Material	Use	UnitCost	Size1	Unit1	Size2	Unit2	Area Name	Area	Length	Density	Quantity	Sub Total
10	Heat Exchanger, Air to Liquid	Radiator	$ 0.00	4158	cm^3			Rectangular area				1	$ 14.55
20	Aluminium, normal (per kg)	Radiator filler necks	$ 4.20	0.040	kg			Round 25mm diam.	4.91E-04	0.03	2712	2	$ 0.34
												Sub Total	**$ 14.89**

ItemOrder	Process	Use	UnitCost	Unit	Quantity	Multiplier	Mult. Val.	Sub Total
10	Machining Setup, Install and Remove	Setup machining and removal	$ 1.30	Unit	2			$ 2.60
20	Machining	Radiator Filler Necks	$ 0.04	cm^3	24.92	Material - Aluminium	1	$ 1.00
30	Weld		$ 0.15	cm	90.2			$ 13.53
							Sub Total	**$ 17.13**

University	Ecole Centrale de Lyon		Back to BOM	**Car #**	81	**Part Cost**	$ 1.92
System	Engine & Drivetrain	Drawing :	FileLink1			**Qty**	1
Assembly	Cooling System	**FileLink2**		**FileLink1**			
Part	Radiator lateral upper tab	**FileLink3**		**FileLink2**		**Extended Cost**	$ 1.92
P/N Base	EN 08002			**FileLink3**			
Suffix	AA						
Details							

ItemOrder	Material	Use	UnitCost	Size1	Unit1	Size2	Unit2	Area Name	Area	Length	Density	Quantity	Sub Total
10	Steel, Mild (per kg)	Radiator Lateral Upper Tab	$ 2.25	0.031	kg			Rectangular area	1.30E-03	0.003	7850	1	$ 0.07
												Sub Total	**$ 0.07**

ItemOrder	Process	Use	UnitCost	Unit	Quantity	Multiplier	Mult. Val.	Sub Total
10	Machining Setup, Install and Remove	Setup for laser cut	$ 1.30	Unit	1			$ 1.30
20	Laser Cut	Laser cut	$ 0.01	cm	18.53	Material - Steel	3	$ 0.56
							Sub Total	**$ 1.86**

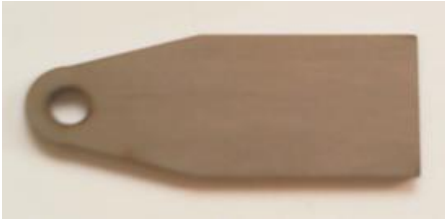

Tolérancement générale
suivant la norme ISO 2780-MK

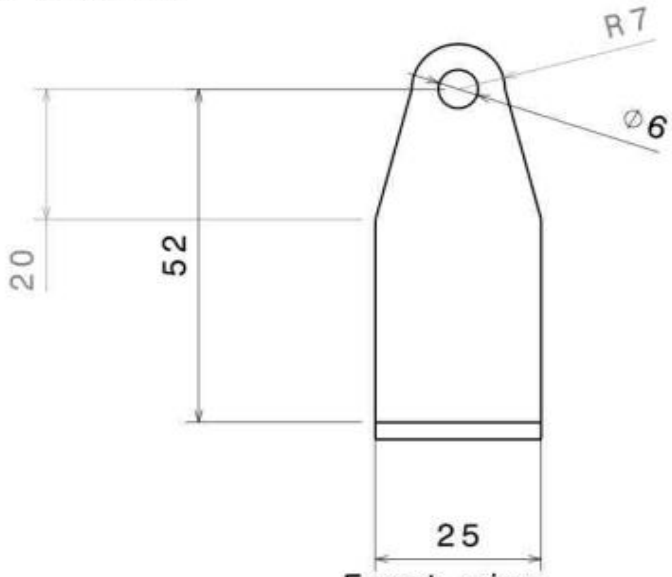

Front view
Scale: 1:1

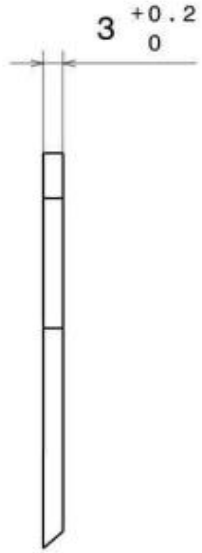

Left view
Scale: 1:1

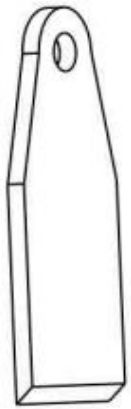

Isometric view
Scale: 1:1

Taille A4		Ecurie Piston Sport Auto
Dessiné par FCO	Date 16/12/2016	Désignation 17M_M_023_CRH
ferran.clemente-rodrigo@ecl15.ec-lyon.fr 0695729145		Quantité 1 / Matériau S235 / Version 1.0
Plan vérifié par AGU		Echelle 1:1 / No plan 17M_M_023_CRH / Feuille 1/1

University	Ecole Centrale de Lyon		Back to BOM	**Car #**	81	**Part Cost**	$ 2.59
System	Engine & Drivetrain	Drawing :	FileLink1			**Qty**	1
Assembly	Cooling System		**FileLink2**	**FileLink1**			
Part	Radiator lateral lower tab		**FileLink3**	**FileLink2**		**Extended Cost**	$ 2.59
P/N Base	EN 08003			**FileLink3**			
Suffix	AA						
Details							

ItemOrder	Material	Use	UnitCost	Size1	Unit1	Size2	Unit2	Area Name	Area	Length	Density	Quantity	Sub Total
10	Steel, Mild (per kg)	Radiator Lateral Lower Tab	$ 2.25	0.094	kg			Rectangular area	3.00E-03	4.00E-03	7850	1	$ 0.21
												Sub Total	**$ 0.21**

ItemOrder	Process	Use	UnitCost	Unit	Quantity	Multiplier	Mult. Val.	Sub Total
10	Machining Setup, Install and Remove	Setup for laser cut	$ 1.30	Unit	1			$ 1.30
20	Laser Cut	Laser cut	$ 0.01	cm	27.6	Material - Steel	3	$ 0.83
30	Sheet Metal Bends	Bend Tab	$ 0.25	Unit	1			$ 0.25
							Sub Total	**$ 2.38**

Tolérancement générale
suivant la norme ISO 2780-MK

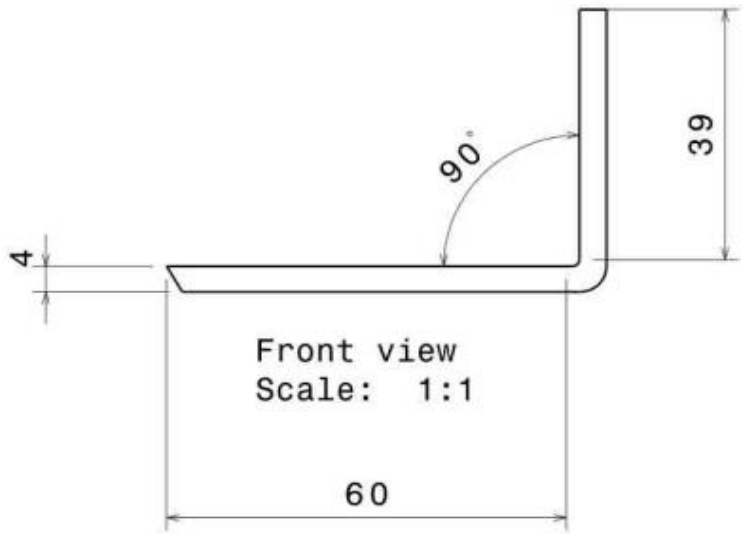

Front view
Scale: 1:1

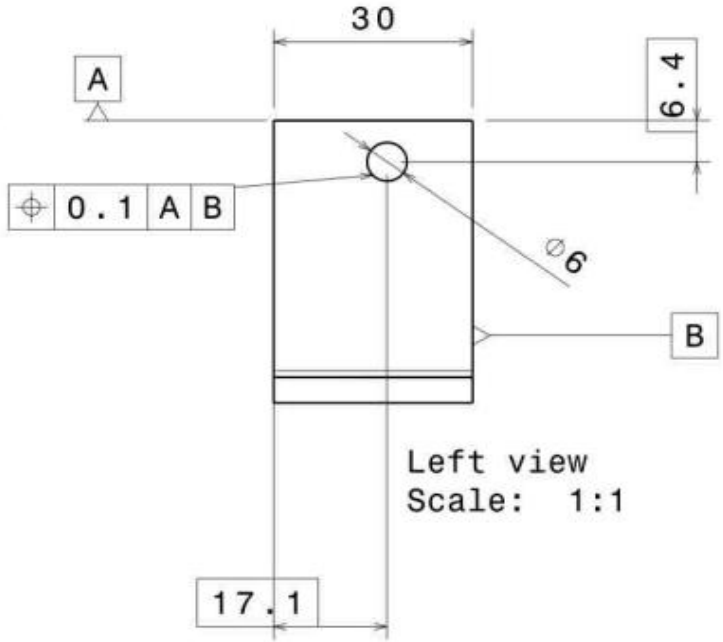

Left view
Scale: 1:1

Isometric view
Scale: 1:1

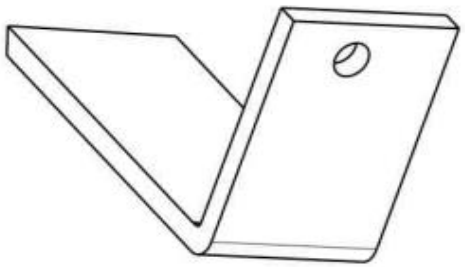

Taille A4		Ecurie Piston Sport Auto
Dessiné par FCO	Date 16/12/2016	Désignation: Chape bas chassis radiateur
ferran.clemente-rodrigo@ecl15.ec-lyon.fr 0695729145		Quantité 1 / Matériau S235 / Version 1.0
Plan vérifié par AGU		Echelle 1:1 / No plan 17M_M_024_CRB / Feuille 1/1

University	Ecole Centrale de Lyon		Back to BOM	**Car #**	81	**Part Cost**	$ 1.98
System	Engine & Drivetrain	Drawing :	FileLink1			**Qty**	1
Assembly	Cooling System		**FileLink2**	**FileLink1**			
Part	Radiator Back tab		**FileLink3**	**FileLink2**		**Extended Cost**	$ 1.98
P/N Base	EN 08004			**FileLink3**			
Suffix	AA						
Details							

ItemOrder	Material	Use	UnitCost	Size1	Unit1	Size2	Unit2	Area Name	Area	Length	Density	Quantity	Sub Total
10	Steel, Mild (per kg)	Radiator Back Tab	$ 2.25	0.016	kg			Rectangular area	1.00E-03	2.00E-03	7850	1	$ 0.04
												Sub Total	**$ 0.04**

ItemOrder	Process	Use	UnitCost	Unit	Quantity	Multiplier	Mult. Val.	Sub Total
10	Machining Setup, Install and Remove	Setup for laser cut	$ 1.30	Unit	1			$ 1.30
20	Laser Cut	Laser cut	$ 0.01	cm	21.41	Material - Steel	3	$ 0.64
							Sub Total	**$ 1.94**

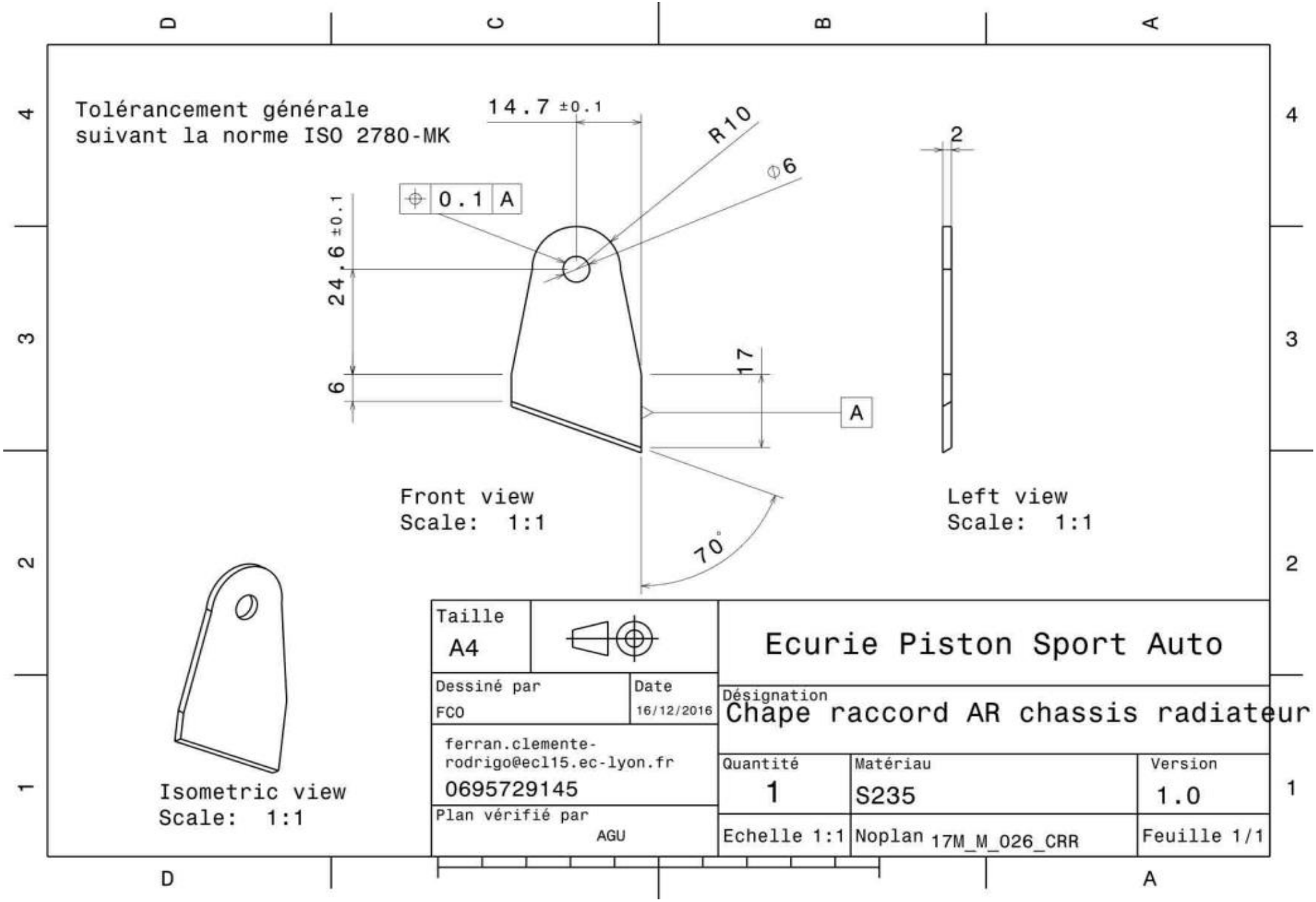
Tolérancement générale
suivant la norme ISO 2780-MK
14.7 ±0.1
R10
⌀6
0.1 A
24.6 ±0.1
6
17
A
70°
2
Front view
Scale: 1:1
Left view
Scale: 1:1
Isometric view
Scale: 1:1
Taille
A4
Dessiné par
FCO
Date
16/12/2016
ferran.clemente-rodrigo@ecl15.ec-lyon.fr
0695729145
Plan vérifié par
AGU
Ecurie Piston Sport Auto
Désignation
Chape raccord AR chassis radiateur
Quantité
1
Matériau
S235
Version
1.0
Echelle 1:1
Noplan 17M_M_026_CRR
Feuille 1/1

University	Ecole Centrale de Lyon		Back to BOM	**Car #**	81	**Part Cost**	$ 31.04
System	Engine & Drivetrain	**FileLink1**				**Qty**	1
Assembly	Cooling System	**FileLink2**		**FileLink1**			
Part	Main Coolant Line	**FileLink3**		**FileLink2**		**Extended Cost**	$ 31.04
P/N Base	EN 08005			**FileLink3**			
Suffix	AA						
Details							

ItemOrder	Material	Use	UnitCost	Size1	Unit1	Size2	Unit2	Area Name	Area	Length	Density	Quantity	Sub Total
10	Hose, Silicone	Sleeve	$ 11.94	25.4	mm			Tube 25.4 x 0.5mm				0.4	$ 4.78
20	Steel, Stainless	Main lines	$ 2.25	0.153	kg			Tube 25 x 0.5mm	1.94E-05	1.00	7850	1	$ 7.48
												Sub Total	**$ 12.26**

ItemOrder	Process	Use	UnitCost	Unit	Quantity	Multiplier	Mult. Val.	Sub Total
10	Cut (scissors, knife)	Silicone hose cutting	$ 0.06	cm	20.32		1	$ 1.22
20	Saw or tubing cuts	Steel hose cutting	$ 0.40	cm	20			$ 8.00
30	Assemble, 1 kg, Interference	Hose and sleeve assembly	$ 0.19	labor	4			$ 0.76
40	Ratchet <= 6.35 mm	Bolt Hose Clamp	$ 0.50	labor	8			$ 4.00
							Sub Total	**$ 13.98**

ItemOrder	Fastener	Use	UnitCost	Size1	Unit1	Size2	Unit2	Quantity	Sub Total
10	Hose Clamp, Miniature Bolt	Main line hose clamp	$ 0.60	25.4	mm			8	$ 4.80
								Sub Total	**$ 4.80**

University	Ecole Centrale de Lyon		Back to BOM	**Car #**	81	**Part Cost**	$ 30.77
System	Engine & Drivetrain	**FileLink1**				**Qty**	1
Assembly	Cooling System	**FileLink2**		**FileLink1**			
Part	Fan	**FileLink3**		**FileLink2**		**Extended Cost**	$ 30.77
P/N Base	EN 08006			**FileLink3**			
Suffix	AA						
Details							

ItemOrder	Material	Use	UnitCost	Size1	Unit1	Size2	Unit2	Area Name	Area	Length	Density	Quantity	Sub Total
10	Heat Exchanger Fan		$ 30.00									1	$ 30.00
												Sub Total	**$ 30.00**

ItemOrder	Process	Use	UnitCost	Unit	Quantity	Multiplier	Mult. Val.	Sub Total
10	Assemble, 1kg, Line-On-Line	Set Fan to Flow Converger	$ 0.13	Labor	1		1	$ 0.13
20	Assemble, 1kg, Loose	Push pin	$ 0.06	Labor	4		1	$ 0.24
							Sub Total	**$ 0.37**

ItemOrder	Fastener	Use	UnitCost	Size1	Unit1	Size2	Unit2	Quantity	Sub Total
10	Pin, Plastic Push	Set Fan to Radiator	0.1					4	$ 0.40
								Sub Total	**$ 0.40**

University	Ecole Centrale de Lyon		Back to BOM	**Car #**	81	**Part Cost**	$ 20.95
System	Engine & Drivetrain	Drawing :	FileLink1			**Qty**	1
Assembly	Cooling System	**FileLink2**		**FileLink1**			
Part	Expansion Tank	**FileLink3**		**FileLink2**		**Extended Cost**	$ 20.95
P/N Base	EN 08007			**FileLink3**			
Suffix	AA						
Details							

ItemOrder	Material	Use	UnitCost	Size1	Unit1	Size2	Unit2	Area Name	Area	Length	Density	Quantity	Sub Total
10	Aluminium, normal (per kg)	Lateral side	$ 4.20	0.082	kg			Rectangular 200mm x 76mm	1.52E-02	0.002	2712	1	$ 0.35
20	Aluminium, normal (per kg)	Upper and lower side	$ 4.20	0.014	kg			Square 50mm	2.50E-03	0.002	2712	2	$ 0.11
30	Aluminium, normal (per kg)	Filler neck	$ 4.20	0.025	kg			Round 24mm diameter	4.52E-04	0.020	2712	1	$ 0.10
40	Aluminium, normal (per kg)	Hose output	$ 4.20	0.003	kg			Round 10mm diameter	7.90E-05	0.015	2712	2	$ 0.03
50	Steel, Mild (per kg)	Expansion tank cap	$ 2.25	0.111	kg			Round 30mm diameter	7.07E-04	0.020	7850	1	$ 0.25
60	Aluminium, normal (per kg)	Expansion tank tab	$ 4.20	0.001	kg			Tab profile	1.36E-04	0.003	2712	2	$ 0.01
												Sub Total	**$ 0.85**

ItemOrder	Process	Use	UnitCost	Unit	Quantity	Multiplier	Mult. Val.	Sub Total
10	Sheet metal bends	Lateral sides bends	$ 0.25	bend	3		1	$ 0.75
20	Machining Setup, Install and remove	Setup for machining and removal	$ 1.30	Unit	1		1	$ 1.30
30	Machining	Filler neck	$ 0.04	cm^3	11.77	Material : Aluminium	1	$ 0.47
40	Drilled holes	hole for hose output in filler neck	$ 0.35	hole	1		1	$ 0.35
50	Machining Setup, Install and remove	for laser cut	$ 1.30	Unit	1		1	$ 1.30
60	Laser cut	Upper and lower side cutting	$ 0.01	cm	10.68	Material : Aluminum	1	$ 0.11
70	Machining Setup, Install and remove	Setup for machining and removal	$ 1.30	Unit	1		1	$ 1.30
80	Machining	Hose output	$ 0.04	cm^3	1.51	Material : Aluminum	1	$ 0.06
90	Machining Setup, Install and remove	Laser cut of tabs	$ 1.30	Unit	1	2 tabs cut from a single machine setup	0.5	$ 0.65
100	Laser cut	Tabs profile	$ 0.01	cm	6.77	Material : Aluminum - Repeat 2	2	$ 0.14
110	Weld	Expansion tank welding	$ 0.15	cm	63.08			$ 9.46
120	Machining Setup, Install and remove	Setup for machining and removal	$ 1.30	Unit	1		1	$ 1.30
130	Machining	Expansion tank cap	$ 0.04	cm^3	6.04	Material : Steel	3	$ 0.72
140	Assemble, 1 kg, Interference	Expansion tank filler neck and cap assembly	$ 0.19	Unit	1			$ 0.19
							Sub Total	**$ 18.10**

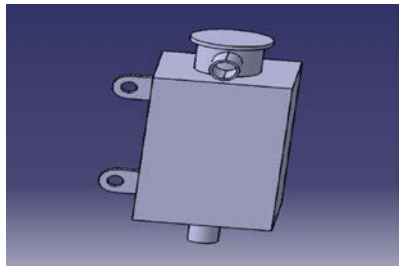

ItemOrder	Tooling	Use	UnitCost	Unit	Quantity	PVF	FracIncld	Sub Total
10	Welds - Welding Fixture Tabs	Expansion tank welding fixture	$ 500.00	point	12	3000	1	$ 2.00
							Sub Total	**$ 2.00**

Il s'agit de tôle en 2 mm ALU plié en carré puis soudé. Les chapes identiques faites en découpe laser seront soudés directement sur le vase d'expansion.

La goulotte est une pièce commandé à souder. Il faut simplement prévoir le trou pour qu'elle rentre (voir Top View)

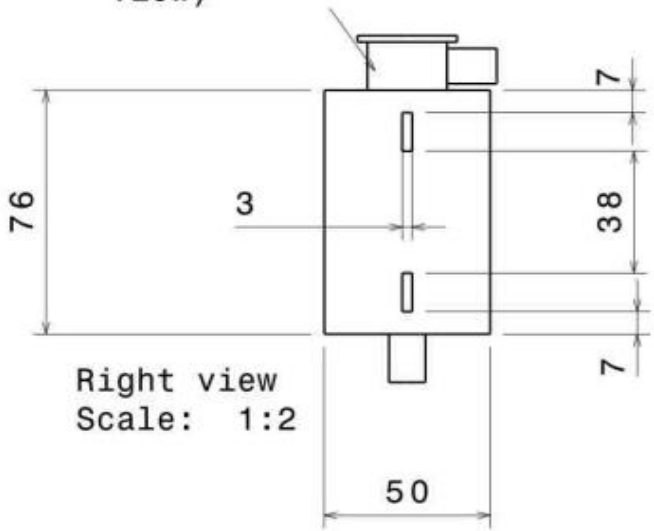

Right view
Scale: 1:2

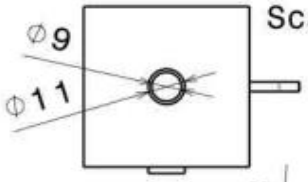

Bottom view
Scale: 1:2

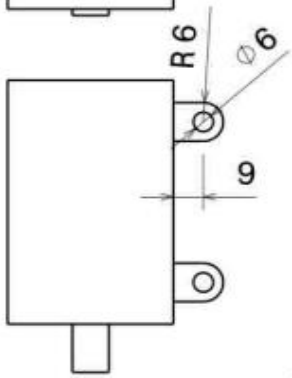

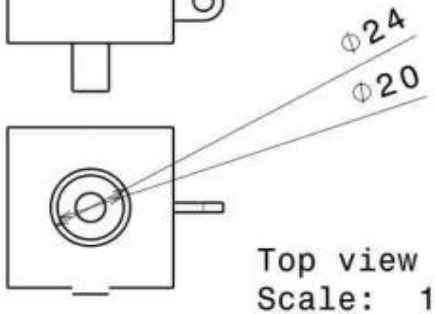

Top view
Scale: 1:2

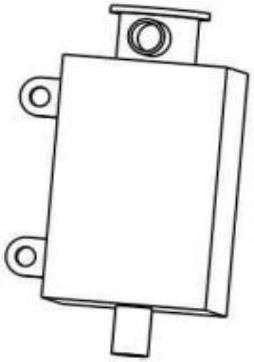

Isometric view
Scale: 1:2

Taille A4		Ecurie Piston Sport Auto
Dessiné par FCO	Date 07/02/2017	Désignation 17M_M_038_CVE
Coordonnées 0695729145 ferran.clemente-rodrigo@ecl15.ec-lyon.fr	Quantité 1	Matériau ALU 5754 / Version 2.0
Plan vérifié par XXX	Echelle 1:1	Numéro du plan 17M_M_017_VEX / Feuille 1/1

University	Ecole Centrale de Lyon		Back to BOM	**Car #**	81	**Part Cost**	$ 1.54
System	Engine & Drivetrain	Drawing :	FileLink1			**Qty**	1
Assembly	Cooling System	**FileLink2**		**FileLink1**			
Part	Expansion Tank tab	**FileLink3**		**FileLink2**		**Extended Cost**	$ 1.54
P/N Base	EN 08008			**FileLink3**			
Suffix	AA						
Details							

ItemOrder	Material	Use	UnitCost	Size1	Unit1	Size2	Unit2	Area Name	Area	Length	Density	Quantity	Sub Total
10	Steel, Mild (per kg)	Expansion Tank Tab	$ 2.25	0.007	kg			Rectangular area	3.78E-04	0.003	7850	1	$ 0.02
												Sub Total	**$ 0.02**

ItemOrder	Process	Use	UnitCost	Unit	Quantity	Multiplier	Mult. Val.	Sub Total
10	Machining Setup, Install and Remove	Setup for laser cut	$ 1.30	Unit	1			$ 1.30
20	Laser Cut	Laser cut	$ 0.01	cm	7.6	Material - Steel	3	$ 0.23
							Sub Total	**$ 1.53**

Tolérancement générale
suivant la norme ISO 2780-MK

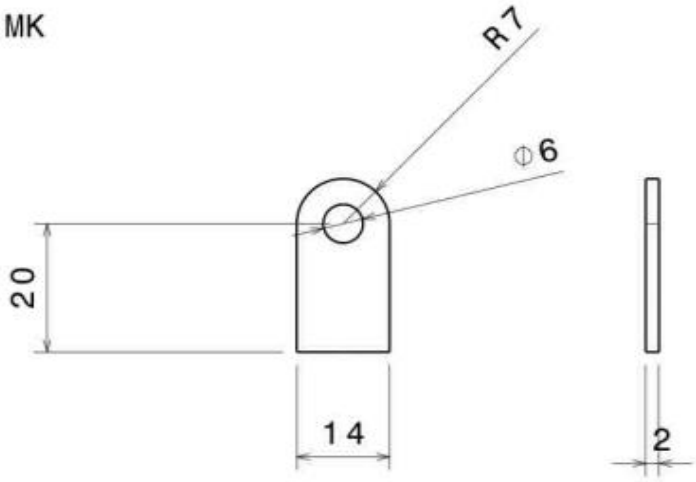

Front view
Scale: 1:1

Left view
Scale: 1:1

Isometric view
Scale: 1:1

Taille A4		Ecurie Piston Sport Auto
Dessiné par FCO	Date 16/12/2016	Désignation: Chappe Vase d'expansion
Coordonnées Tel : 0695729145 Mail : ferran.clemente-rodrigo@ecl15.ec-lyon.fr		Quantité 2 / Matériau Acier S235 / Version 1.0
Plan vérifié par AGU		Echelle 1:1 / Ref 17M_M_038_CVE / Feuille 1/1

University	Ecole Centrale de Lyon		Back to BOM	**Car #**	81	**Part Cost**	$ 1.63
System	Engine & Drivetrain	Drawing :	FileLink1			**Qty**	1
Assembly	Cooling System	**FileLink2**		**FileLink1**			
Part	Lateral Tube	**FileLink3**		**FileLink2**		**Extended Cost**	$ 1.63
P/N Base	EN 08009			**FileLink3**			
Suffix	AA						
Details							

ItemOrder	Material	Use	UnitCost	Size1	Unit1	Size2	Unit2	Area Name	Area	Length	Density	Quantity	Sub Total
10	Aluminum, Normal (per kg)	Lateral bar	$ 4.20	0.2	m	0.003	m	Circular area	8.72E-05	0.28	2712	1	$ 0.28
												Sub Total	**$ 0.28**

ItemOrder	Process	Use	UnitCost	Unit	Quantity	Multiplier	Mult. Val.	Sub Total
10	Sheet Metal Saw Cut	Cut of the lateral bar	$ 0.20	cm	2			$ 0.40
20	Drilled holes < 25.4 mm dia.	Holes for the lateral bar	$ 0.35	Unit	2			$ 0.70
30	Sheet metal bends	Bar twist	$ 0.25	Bend	1			$ 0.25
							Sub Total	**$ 1.35**

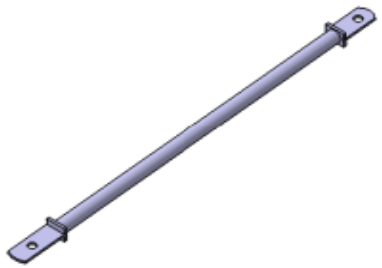

Tolérancement général suivant
la norme ISO 2780-MK

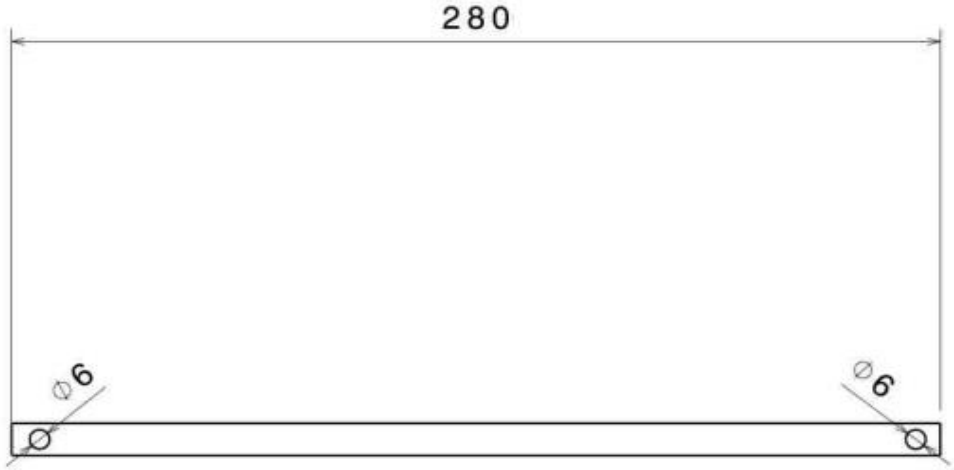

Front view
Scale: 1:2

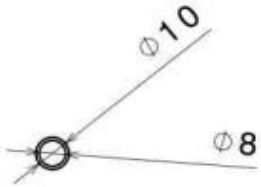

Left view
Scale: 1:2

Il s'agit d'un tube creux de 280 mm de longueur et de 10mm de diamètre de 2mm d'épaisseur, applati aux extrémités puis taraudé à 6mm de diamètre.

Taille A4		Ecurie Piston Sport Auto
Dessiné par FCO	Date 16/12/2016	Désignation: Tube raccord arriere
Coordonnées Tel : 0695729145 Mail : ferran.clemente-rodrigo@ecl15.ec-lyon.fr		Quantité 1 / Matériau Aluminium 5457 / Version 1.0
Plan vérifié par AGU		Echelle 1:2 / Ref 17M_M_028_TCR / Feuille 1/1

University	Ecole Centrale de Lyon		Back to BOM	**Car #**	81	**Part Cost**	$ 42.36
System	Engine & Drivetrain	**FileLink1**				**Qty**	1
Assembly	Cooling System	**FileLink2**		**FileLink1**			
Part	Flow Rectifier	**FileLink3**		**FileLink2**		**Extended Cost**	$ 42.36
P/N Base	EN 08010			**FileLink3**			
Suffix	AA						
Details	Made by 3D printing						

ItemOrder	Material	Use	UnitCost	Size1	Unit1	Size2	Unit2	Area Name	Area	Length	Density	Quantity	Sub Total
10	Plastic	Flux Rectifier	$ 3.30	1.20	kg								$ 3.96
												Sub Total	**$ 3.96**

ItemOrder	Process	Use	UnitCost	Unit	Quantity	Multiplier	Mult. Val.	Sub Total
10	Rapid Prototype - Plastic		$ 32.00	kg	1.2			$ 38.40
							Sub Total	**$ 38.40**

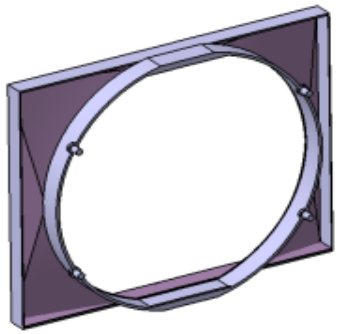

University	Ecole Centrale de Lyon		Back to BOM	**Car #**	81	**Part Cost**	$ 15.48
System	Engine & Drivetrain	**FileLink1**				**Qty**	1
Assembly	Cooling System	**FileLink2**		**FileLink1**			
Part	Secondary Coolant Line	**FileLink3**		**FileLink2**		**Extended Cost**	$ 15.48
P/N Base	EN 08011			**FileLink3**			
Suffix	AA						
Details							

ItemOrder	Material	Use	UnitCost	Size1	Unit1	Size2	Unit2	Area Name	Area	Length	Density	Quantity	Sub Total
10	Hose, Silicone	Sleeve	$ 5.83	12.4	mm			Tube 12.4 x 0.5mm				0.2	$ 1.17
20	Steel, Stainless	Secondary lines	$ 2.25	0.072	kg			Tube 12 x 0.5mm	9.23E-06	1.00	7850	1	$ 0.16
												Sub Total	**$ 1.33**

ItemOrder	Process	Use	UnitCost	Unit	Quantity	Multiplier	Mult. Val.	Sub Total
10	Cut (scissors, knife)	Silicone hose cutting	$ 0.06	cm	9.92		1	$ 0.60
20	Saw or tubing cuts	Steel hose cutting	$ 0.40	cm	10			$ 4.00
30	Assemble, 1 kg, Interference	Hose and sleeve assembly	$ 0.19	labor	4			$ 0.76
40	Ratchet <= 6.35 mm	Bolt Hose Clamp	$ 0.50	labor	8			$ 4.00
							Sub Total	**$ 9.36**

ItemOrder	Fastener	Use	UnitCost	Size1	Unit1	Size2	Unit2	Quantity	Sub Total
10	Hose Clamp, Miniature Bolt	Main line hose clamp	$ 0.60	25.4	mm			8	$ 4.80
								Sub Total	**$ 4.80**

University	Ecole Centrale de Lyon	**Car #**	81	**Asm Cost**	$ 468.65
System	Engine & Drivetrain	Back to BOM		**Qty**	1
Assembly	Differential	**FileLink1**			
P/N Base	EN A0009	**FileLink2**		**Extended Cost**	$ 468.65
Suffix	AA	**FileLink3**			
Details	Differential housing and mounting assembly				

ItemOrder	Part	Part Cost	Quantity	Sub Total
10	Housing	$ 125.94	1	$ 125.94
20	Right Bearing Carrier	$ 57.34	1	$ 57.34
30	Left Bearing Carrier	$ 58.01	1	$ 58.01
40	Upper Left Bearing Carrier Tab	$ 0.87	2	$ 1.74
50	Lower Left Bearing Carrier Tab	$ 0.87	2	$ 1.74
60	Upper Right Bearing Carrier Tab	$ 0.87	2	$ 1.74
70	Lower Left Bearing Carrier Tab	$ 0.87	2	$ 1.74
80	Right Eccentric	$ 7.80	1	$ 7.80
90	Left Eccentric	$ 8.97	1	$ 8.97
			Sub Total	**$ 265.01**

ItemOrder	Material	Use	UnitCost	Size1	Unit1	Size2	Unit2	Area Name	Area	Length	Density	Quantity	Sub Total
10	Bearing, Double Row, Ball, Radial	Right differential bearing	$ 32.00	80	mm	16	mm					1	$ 32.00
20	Bearing, Double Row, Ball, Radial	Left differential bearing	$ 38.18	90	mm	18	mm					1	$ 38.18
30	Paint	Paint the tabs	$ 10.00	0.008	m^2							0.008	$ 0.08
40	Fluid, Oil	Differential oil	$ 0.75	0.06	litre							0.06	$ 0.05
50	Differential Internals, Limited Slip, Salisbury or Powerflow or Clutch Style		$ 110.00	1	unit							1	$ 110.00
												Sub Total	**$ 180.31**

ItemOrder	Process	Use	UnitCost	Unit	Quantity	Multiplier	Mult. Val.	Sub Total
10	Weld	Weld tabs to frame	$ 0.15	cm	56.54		1	$ 8.48
20	Aerosol apply	Paint the tabs	$ 5.25	m^2	0.008		1	$ 0.04
30	Assemble, 3 kg, Interference	Assemble the housing	$ 0.56	unit	2		1	$ 1.12
40	Assemble, 1 kg, Interference	Assemble the right bearing and eccentric	$ 0.19	unit	1		1	$ 0.19
50	Assemble, 1 kg, Interference	Assemble the left bearing and eccentric	$ 0.19	unit	1		1	$ 0.19
60	Assemble, 1 kg, Interference	Assemble the bearing carriers and the bearings	$ 0.19	unit	2		1	$ 0.38
70	Ratchet <= 6,35mm	Bolt the bearing carriers to eccentric	$ 0.50	unit	4		1	$ 2.00
80	Reaction Tool <=6,35mm	Bolt the bearing carriers to eccentric	$ 0.25	unit	4		1	$ 1.00
90	Assemble, 3kg, Line-on-Line	Put the bearing carriers and tabs in place	$ 0.38	unit	2		1	$ 0.76
100	Assemble, 1kg, Loose	Put two washers on bolt	$ 0.06	unit	4		1	$ 0.24
110	Ratchet <=25,4mm	Bolt the left bearing carrier to tabs	$ 0.75	unit	2		1	$ 1.50
120	Reaction Tool <=25,4mm	Bolt the left bearing carrier to tabs	$ 0.25	unit	2		1	$ 0.50
130	Ratchet <=25,4mm	Bolt the right bearing carrier to tabs	$ 0.75	unit	2		1	$ 1.50
140	Reaction Tool <=25,4mm	Bolt the right bearing carrier to tabs	$ 0.25	unit	2		1	$ 0.50
							Sub Total	**$ 18.40**

ItemOrder	Fastener	Use	UnitCost	Size1	Unit1	Size2	Unit2	Quantity	Sub Total
10	Bolt, Grade 8,8 (SAE 5)	Assemble left bearing carrier and tabs	$ 0.53	12	mm	50	mm	2	$ 1.05
20	Nut, Grade 8,8 (SAE 5)	Assemble left bearing carrier and tabs	$ 0.10	12	mm			2	$ 0.20
30	Bolt, Grade 8,8 (SAE 5)	Blocking left bearing carrier and left eccentric	$ 0.12	8	mm	30	mm	2	$ 0.24
40	Nut, Grade 8,8 (SAE 5)	Blocking left bearing carrier and left eccentric	$ 0.04	8	mm			2	$ 0.09
50	Washer, Grade 8,8 (SAE 5)	Blocking eccentric	$ 0.01		unit			4	$ 0.04
60	Bolt, Grade 8,8 (SAE 5)	Assemble right bearing carrier and tabs	$ 0.12	8	mm	30	mm	2	$ 0.24
70	Nut, Grade 8,8 (SAE 5)	Assemble right bearing carrier and tabs	$ 0.04	8	mm			2	$ 0.09
80	Bolt, Grade 8,8 (SAE 5)	Blocking right bearing carrier and right eccentric	$ 0.12	8	mm	30	mm	2	$ 0.24
90	Nut, Grade 8,8 (SAE 5)	Blocking right bearing carrier and right eccentric	$ 0.04	8	mm			2	$ 0.09

Sub Total	**$ 2.27**

ItemOrder	Tooling	Use	UnitCost	Unit	Quantity	PVF	FractionIncluded	Sub Total
10	Welds- Welding Fixture	Weld tabs to frame	$ 500.00	point	16	3000	1	$ 2.67
							Sub Total	**$ 2.67**

University	Ecole Centrale de Lyon		Back to BOM	**Car #**	81	**Part Cost**	$ 125.94
System	Engine & Drivetrain	**FileLink1**				**Qty**	1
Assembly	Differential	**FileLink2**		**FileLink1**			
Part	Housing	**FileLink3**		**FileLink2**		**Extended Cost**	$ 125.94
P/N Base	EN 09001			**FileLink3**			
Suffix	AA						
Details	Bought, cost as made						

ItemOrder	Material	Use	UnitCost	Size1	Unit1	Size2	Unit2	Area Name	Area	Length	Density	Quantity	Sub Total
10	Aluminium, Premium		$ 4.20	1.906	kg			Round 102mm diam.	8.17E-03	0.086	2712	1	$ 8.00
20	Aluminium, Premium		$ 4.20	1.396	kg			Round 102mm diam.	8.17E-03	0.063	2712	1	$ 5.86
30	Aluminium, Premium		$ 4.20	1.773	kg			Round 102mm diam.	8.17E-03	0.080	2712	1	$ 7.45
40	Seal, O-Ring, Elastomer		$ 0.05		unit							2	$ 0.10
												Sub Total	**$ 21.41**

ItemOrder	Process	Use	UnitCost	Unit	Quantity	Multiplier	Mult. Val.	Sub Total
10	Machining Setup, Install and remove	Setup and removal	$ 1.30	unit	1		1	$ 1.30
20	Machining	Machining	$ 0.04	cm^3	623	Material-Aluminium	1	$ 24.92
30	Tapping holes	Tapping lateral holes	$ 0.35	hole	24		1	$ 8.40
40	Tapping holes	Tapping central holes	$ 0.35	hole	3		1	$ 1.05
50	Machining Setup, Install and remove	Setup and removal	$ 1.30	unit	1		1	$ 1.30
60	Machining	Machining	$ 0.04	cm^3	426	Material-Aluminium	1	$ 17.04
70	Drilled holes < 25.4 mm dia.	Hole for the diff. Housing	$ 0.35	hole	12		1	$ 4.20
80	Broach, External	Broach the housing cover	$ 0.50	cm	3.5		1	$ 1.75
90	Machining Setup, Install and remove	Setup and removal	$ 1.30	unit	1		1	$ 1.30
100	Machining	Machining	$ 0.04	cm^3	538	Material-Aluminium	1	$ 21.52
110	Drilled holes < 25.4 mm dia.	Hole for the diff. Cover	$ 0.35	hole	12		1	$ 4.20
120	Assemble, 1 kg, Line-on-Line	Assemble the three parts	$ 0.13	unit	2		1	$ 0.26
130	Ratchet <= 6.35 mm	Assemble the three parts	$ 0.50	unit	24		1	$ 12.00
140	Ratchet <= 25.4 mm	Bolt the drain	$ 0.75	unit	3		1	$ 2.25
							Sub Total	**$ 101.49**

ItemOrder	Fastener	Use	UnitCost	Size1	Unit1	Size2	Unit2	Quantity	Sub Total
10	Bolt, Grade 12.9	Assembly of the three parts	$ 0.06	6	mm	14	mm	24	$ 1.35
20	Washer, Grade 12.9		$ 0.02		unit			24	$ 0.48
30	Bolt, Grade 10.9 (SAE 8)		$ 0.07	8	mm	8	mm	3	$ 0.20
40	Washer, Crush		$ 0.34	8	mm			3	$ 1.01
								Sub Total	**$ 3.03**

University	Ecole Centrale de Lyon		Back to BOM	**Car #**	81	**Part Cost**	$ 57.34
System	Engine & Drivetrain	Drawing :	FileLink1			**Qty**	1
Assembly	Differential	**FileLink2**		**FileLink1**			
Part	Right Bearing Carrier	**FileLink3**		**FileLink2**		**Extended Cost**	$ 57.34
P/N Base	EN 09002			**FileLink3**			
Suffix	AA						
Details							

ItemOrder	Material	Use	UnitCost	Size1	Unit1	Size2	Unit2	Area Name	Area	Length	Density	Quantity	Sub Total
10	Aluminium, Premium	Material for the right bearing carrier	$ 4.20	3.645	kg			Rectangular area 320x300 mm	9.60E-02	0.014	2712	1	$ 15.31
												Sub Total	**$ 15.31**

ItemOrder	Process	Use	UnitCost	Unit	Quantity	Multiplier	Mult. Val.	Sub Total
10	Machining Setup, Install and remove	Setup and removal of the machining of the right bearing carrier	$ 1.30	Unit	1			$ 1.30
20	Machining	Shaping of the differential bearing carrier	$ 0.04	cm^3	1018	Material - Aluminium	1	$ 40.74
							Sub Total	**$ 42.04**

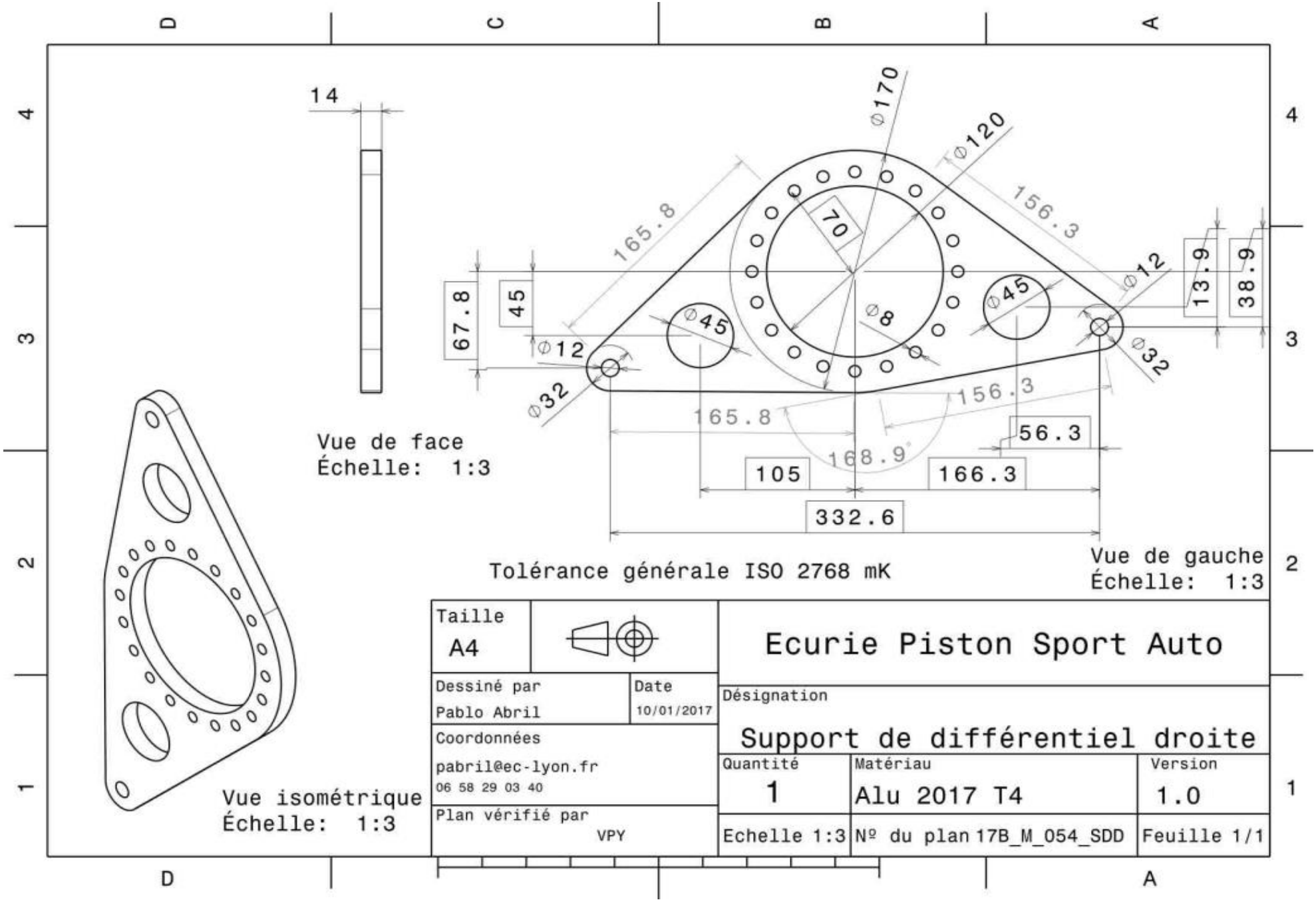
14
Vue de face
Échelle: 1:3
⌀170
⌀120
156.3
165.8
70
67.8
45
⌀12
⌀45
⌀8
⌀45
⌀12
13.9
38.9
⌀32
⌀32
156.3
165.8
56.3
168.9°
105
166.3
332.6
Tolérance générale ISO 2768 mK
Vue de gauche
Échelle: 1:3
Vue isométrique
Échelle: 1:3
Taille
A4
Ecurie Piston Sport Auto
Dessiné par
Pablo Abril
Date
10/01/2017
Désignation
Support de différentiel droite
Coordonnées
pabril@ec-lyon.fr
06 58 29 03 40
Quantité
1
Matériau
Alu 2017 T4
Version
1.0
Plan vérifié par
VPY
Echelle 1:3
Nº du plan 17B_M_054_SDD
Feuille 1/1

University	Ecole Centrale de Lyon		Back to BOM	**Car #**	81	**Part Cost**	$ 58.01
System	Engine & Drivetrain	Drawing :	FileLink1			**Qty**	1
Assembly	Differential	**FileLink2**		**FileLink1**			
Part	Left Bearing Carrier	**FileLink3**		**FileLink2**		**Extended Cost**	$ 58.01
P/N Base	EN 09003			**FileLink3**			
Suffix	AA						
Details							

ItemOrder	Material	Use	UnitCost	Size1	Unit1	Size2	Unit2	Area Name	Area	Length	Density	Quantity	Sub Total
10	Aluminium, Premium	Material for the right bearing carrier	$ 4.20	3.645	kg			Rectangular area 320x300 mm	9.60E-02	0.014	2712	1	$ 15.31
												Sub Total	**$ 15.31**

ItemOrder	Process	Use	UnitCost	Unit	Quantity	Multiplier	Mult. Val.	Sub Total
10	Machining Setup, Install and remove	Setup and removal of the machining of the right bearing carrier	$ 1.30	Unit	1			$ 1.30
20	Machining	Shaping of the differential bearing carrier	$ 0.04	cm^3	1035	Material - Aluminium	1	$ 41.40
							Sub Total	**$ 42.70**

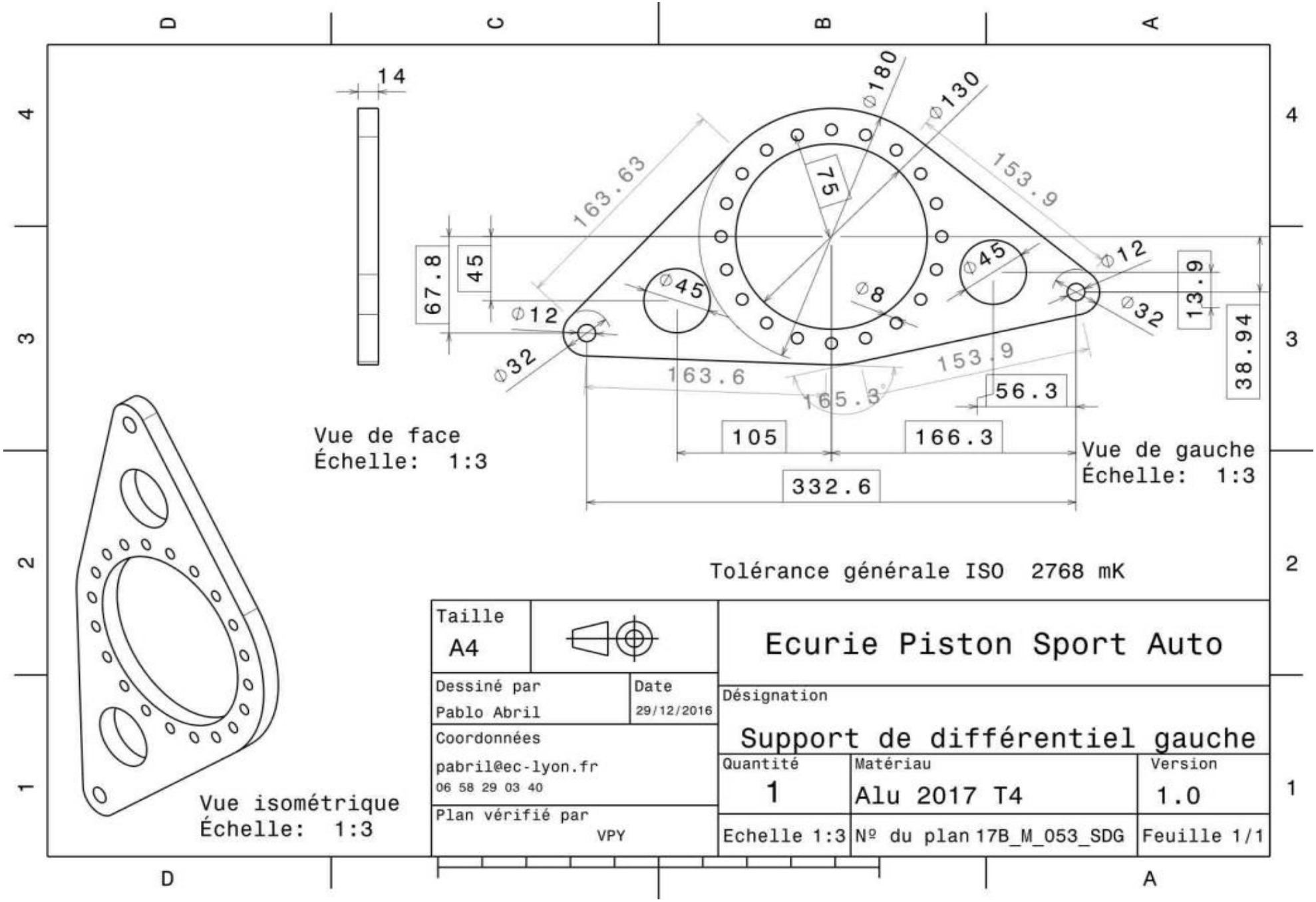
14
Vue de face
Échelle: 1:3
Vue de gauche
Échelle: 1:3
Vue isométrique
Échelle: 1:3
Tolérance générale ISO 2768 mK
163.63
153.9
163.6
153.9
165.3°
332.6
105
166.3
56.3
67.8
45
13.9
38.94
75
Ø180
Ø130
Ø45
Ø12
Ø32
Ø8
Taille
A4
Dessiné par
Pablo Abril
Date
29/12/2016
Coordonnées
pabril@ec-lyon.fr
06 58 29 03 40
Plan vérifié par
VPY
Ecurie Piston Sport Auto
Désignation
Support de différentiel gauche
Quantité
1
Matériau
Alu 2017 T4
Version
1.0
Echelle 1:3
Nº du plan 17B_M_053_SDG
Feuille 1/1

University	Ecole Centrale de Lyon		Back to BOM	**Car #**	81	**Part Cost**	$	0.87
System	Engine & Drivetrain	Drawing :	FileLink1			**Qty**		2
Assembly	Differential	**FileLink2**		**FileLink1**				
Part	Upper Left Bearing Carrier Tab	**FileLink3**		**FileLink2**		**Extended Cost**	$	1.74
P/N Base	EN 09004			**FileLink3**				
Suffix	AA							
Details								

ItemOrder	Material	Use	UnitCost	Size1	Unit1	Size2	Unit2	Area Name	Area	Length	Density	Quantity	Sub Total
10	Steel, Mild	Material for the tab	$ 2.25	0.058	kg			Rectangular area 46*32	1.47E-03	0.005	7850	1	$ 0.13
												Sub Total	**$ 0.13**

ItemOrder	Process	Use	UnitCost	Unit	Quantity	Multiplier	Mult. Val.	Sub Total
10	Machining Setup, Install and remove	Setup for machining	$ 1.30	Unit	1	8 parts cut from a single machine setup	0.125	$ 0.16
20	Laser Cut	Shaping of the tab and holes	$ 0.01	cm	19.19	Material, Steel	3	$ 0.58
							Sub Total	**$ 0.74**

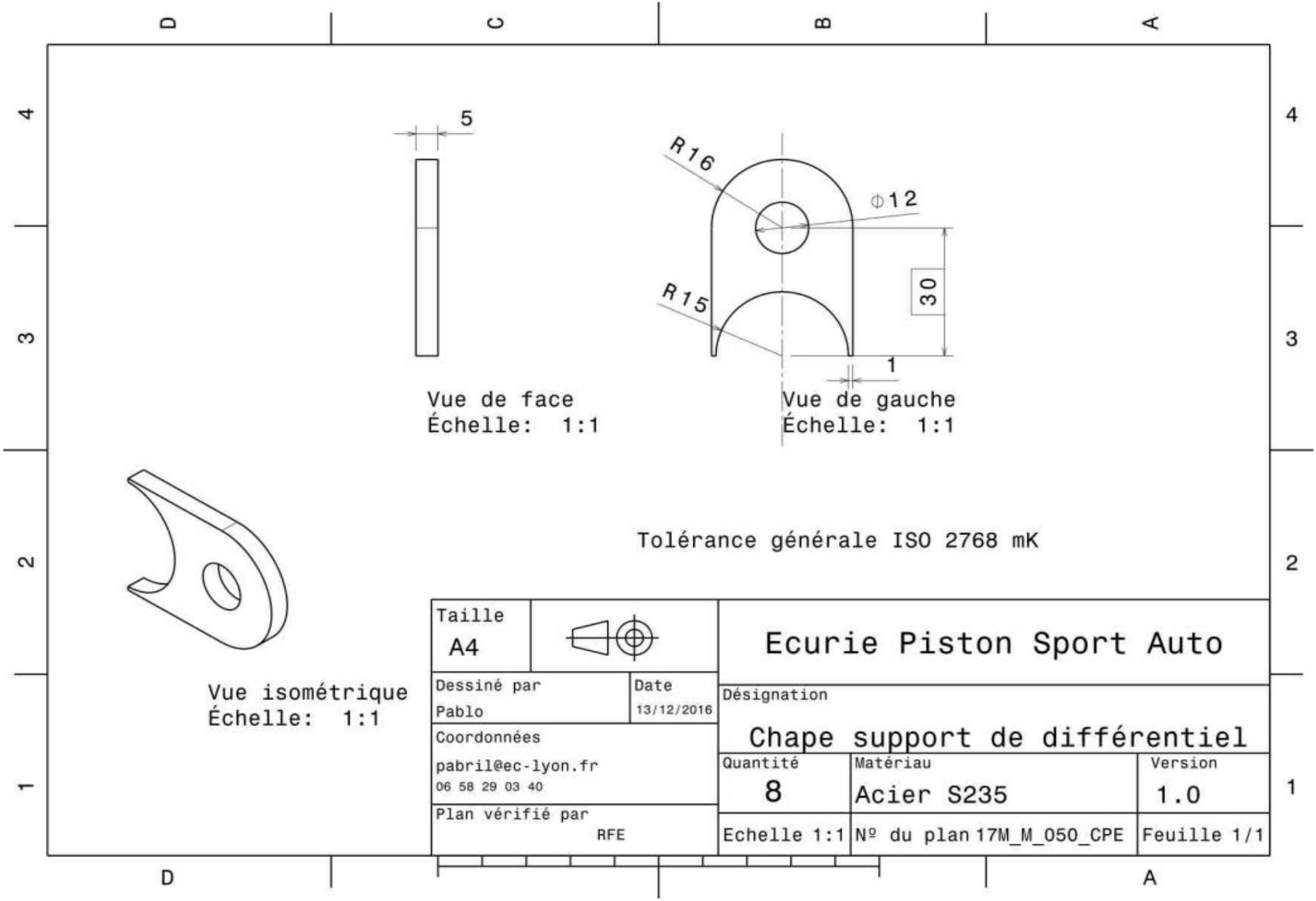
5
R16
Φ12
R15
30
1
Vue de face
Échelle: 1:1
Vue de gauche
Échelle: 1:1
Tolérance générale ISO 2768 mK
Vue isométrique
Échelle: 1:1
Taille
A4
Ecurie Piston Sport Auto
Dessiné par
Pablo
Date
13/12/2016
Désignation
Chape support de différentiel
Coordonnées
pabril@ec-lyon.fr
06 58 29 03 40
Quantité
8
Matériau
Acier S235
Version
1.0
Plan vérifié par
RFE
Echelle 1:1
Nº du plan 17M_M_050_CPE
Feuille 1/1

University	Ecole Centrale de Lyon		Back to BOM	**Car #**	81	**Part Cost**	$ 0.87
System	Engine & Drivetrain	**FileLink1**				**Qty**	2
Assembly	Differential	**FileLink2**		**FileLink1**			
Part	Lower Left Bearing Carrier Tab	**FileLink3**		**FileLink2**		**Extended Cost**	$ 1.74
P/N Base	EN 09005			**FileLink3**			
Suffix	AA						
Details	Same as EN 09004						

ItemOrder	Material	Use	UnitCost	Size1	Unit1	Size2	Unit2	Area Name	Area	Length	Density	Quantity	Sub Total
10	Steel, Mild	Material for the tab	$ 2.25	0.058	kg			Rectangular area 46*32	1.47E-03	0.005	7850	1	$ 0.13
												Sub Total	**$ 0.13**

ItemOrder	Process	Use	UnitCost	Unit	Quantity	Multiplier	Mult. Val.	Sub Total
10	Machining Setup, Install and remove	Setup for machining	$ 1.30	Unit	1	8 parts cut from a single machine setup	0.125	$ 0.16
20	Laser Cut	Shaping of the tab and holes	$ 0.01	cm	19.19	Material, Steel	3	$ 0.58
							Sub Total	**$ 0.74**

University	Ecole Centrale de Lyon		Back to BOM	**Car #**	81	**Part Cost**	$ 0.87
System	Engine & Drivetrain	**FileLink1**				**Qty**	2
Assembly	Differential	**FileLink2**		**FileLink1**			
Part	Upper Right Bearing Carrier Tab	**FileLink3**		**FileLink2**		**Extended Cost**	$ 1.74
P/N Base	EN 09006			**FileLink3**			
Suffix	AA						
Details	Same as EN 09004						

ItemOrder	Material	Use	UnitCost	Size1	Unit1	Size2	Unit2	Area Name	Area	Length	Density	Quantity	Sub Total
10	Steel, Mild	Material for the tab	$ 2.25	0.058	kg			Rectangular area 46*32	1.47E-03	0.005	7850	1	$ 0.13
												Sub Total	**$ 0.13**

ItemOrder	Process	Use	UnitCost	Unit	Quantity	Multiplier	Mult. Val.	Sub Total
10	Machining Setup, Install and remove	Setup for machining	$ 1.30	Unit	1	8 parts cut from a single machine setup	0.125	$ 0.16
20	Laser Cut	Shaping of the tab and holes	$ 0.01	cm	19.19	Material, Steel	3	$ 0.58
							Sub Total	**$ 0.74**

University	Ecole Centrale de Lyon		Back to BOM	**Car #**	81	**Part Cost**	$ 0.87
System	Engine & Drivetrain	**FileLink1**				**Qty**	2
Assembly	Differential	**FileLink2**		**FileLink1**			
Part	Lower Left Bearing Carrier Tab	**FileLink3**		**FileLink2**		**Extended Cost**	$ 1.74
P/N Base	EN 09007			**FileLink3**			
Suffix	AA						
Details	Same as EN 09004						

ItemOrder	Material	Use	UnitCost	Size1	Unit1	Size2	Unit2	Area Name	Area	Length	Density	Quantity	Sub Total
10	Steel, Mild	Material for the tab	$ 2.25	0.058	kg			Rectangular area 46*32	1.47E-03	0.005	7850	1	$ 0.13
												Sub Total	**$ 0.13**

ItemOrder	Process	Use	UnitCost	Unit	Quantity	Multiplier	Mult. Val.	Sub Total
10	Machining Setup, Install and remove	Setup for machining	$ 1.30	Unit	1	8 parts cut from a single machine setup	0.125	$ 0.16
20	Laser Cut	Shaping of the tab and holes	$ 0.01	cm	19.19	Material, Steel	3	$ 0.58
							Sub Total	**$ 0.74**

University	Ecole Centrale de Lyon		Back to BOM	**Car #**	81	**Part Cost**	$ 7.80
System	Engine & Drivetrain	Drawing :	FileLink1			**Qty**	1
Assembly	Differential	**FileLink2**		**FileLink1**			
Part	Right Eccentric	**FileLink3**		**FileLink2**		**Extended Cost**	$ 7.80
P/N Base	EN 09008			**FileLink3**			
Suffix	AA						
Details							

ItemOrder	Material	Use	UnitCost	Size1	Unit1	Size2	Unit2	Area Name	Area	Length	Density	Quantity	Sub Total
10	Plastic, Polyoxymethylene (POM)		$ 3.30	0.542	kg			160mm diam	2.01E-02	0.019	1420	1	$ 1.79
												Sub Total	**$ 1.79**

ItemOrder	Process	Use	UnitCost	Unit	Quantity	Multiplier	Mult. Val.	Sub Total
10	Machining Setup, Install and remove	Setup for machining	$ 1.30	Unit	1			$ 1.30
20	Machining	Holes	$ 0.04	cm^3	235.62	Material - Plastic	0.5	$ 4.71
							Sub Total	**$ 6.01**

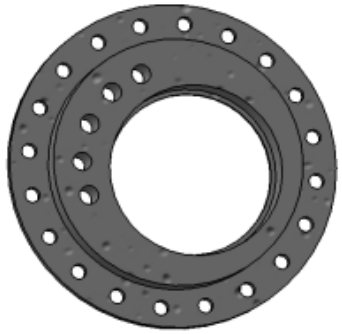

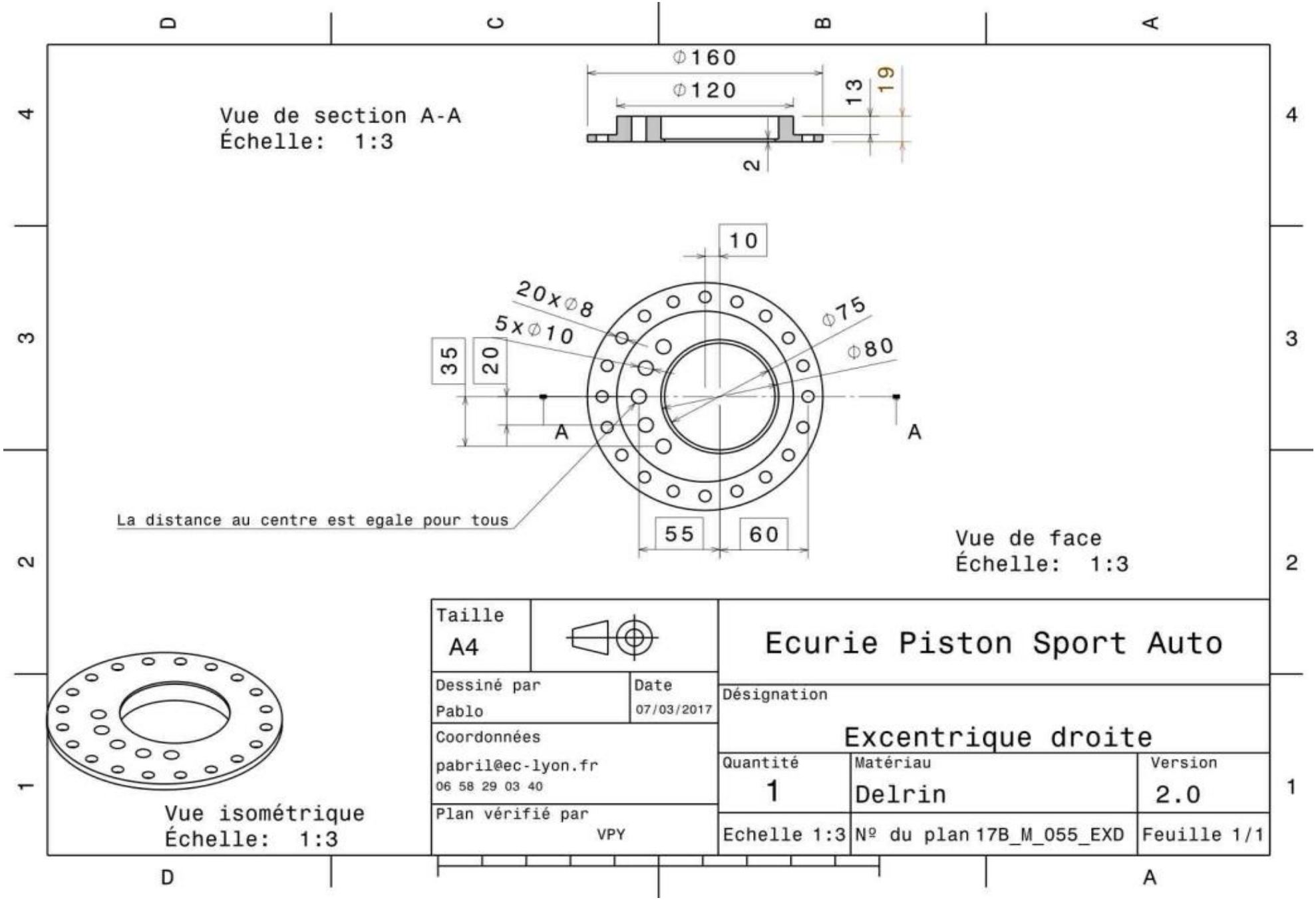
Vue de section A-A
Échelle: 1:3
⌀160
⌀120
13
19
2
10
20x⌀8
5x⌀10
⌀75
⌀80
35
20
A
A
La distance au centre est egale pour tous
55
60
Vue de face
Échelle: 1:3
Vue isométrique
Échelle: 1:3
Taille
A4
Ecurie Piston Sport Auto
Dessiné par
Pablo
Date
07/03/2017
Désignation
Excentrique droite
Coordonnées
pabril@ec-lyon.fr
06 58 29 03 40
Quantité
1
Matériau
Delrin
Version
2.0
Plan vérifié par
VPY
Echelle 1:3
Nº du plan 17B_M_055_EXD
Feuille 1/1

University	Ecole Centrale de Lyon			Back to BOM	**Car #**	81	**Part Cost**	$	8.97
System	Engine & Drivetrain	Drawing :	FileLink1				**Qty**		1
Assembly	Differential		**FileLink2**		**FileLink1**				
Part	Left Eccentric		**FileLink3**		**FileLink2**		**Extended Cost**	$	8.97
P/N Base	EN 09009				**FileLink3**				
Suffix	AA								
Details									

ItemOrder	Material	Use	UnitCost	Size1	Unit1	Size2	Unit2	Area Name	Area	Length	Density	Quantity	Sub Total
10	Plastic, Polyoxymethylene (POM)		$ 3.30	0.641	kg			170mm diam	2.27E-02	0.020	1412	1	$ 2.12
												Sub Total	**$ 2.12**

ItemOrder	Process	Use	UnitCost	Unit	Quantity	Multiplier	Mult. Val.	Sub Total
10	Machining Setup, Install and remove	Setup for machining	$ 1.30	Unit	1			$ 1.30
20	Machining	Shaping and holes	$ 0.04	cm^3	277.84	Material - Plastic	0.5	$ 5.56
							Sub Total	**$ 6.86**

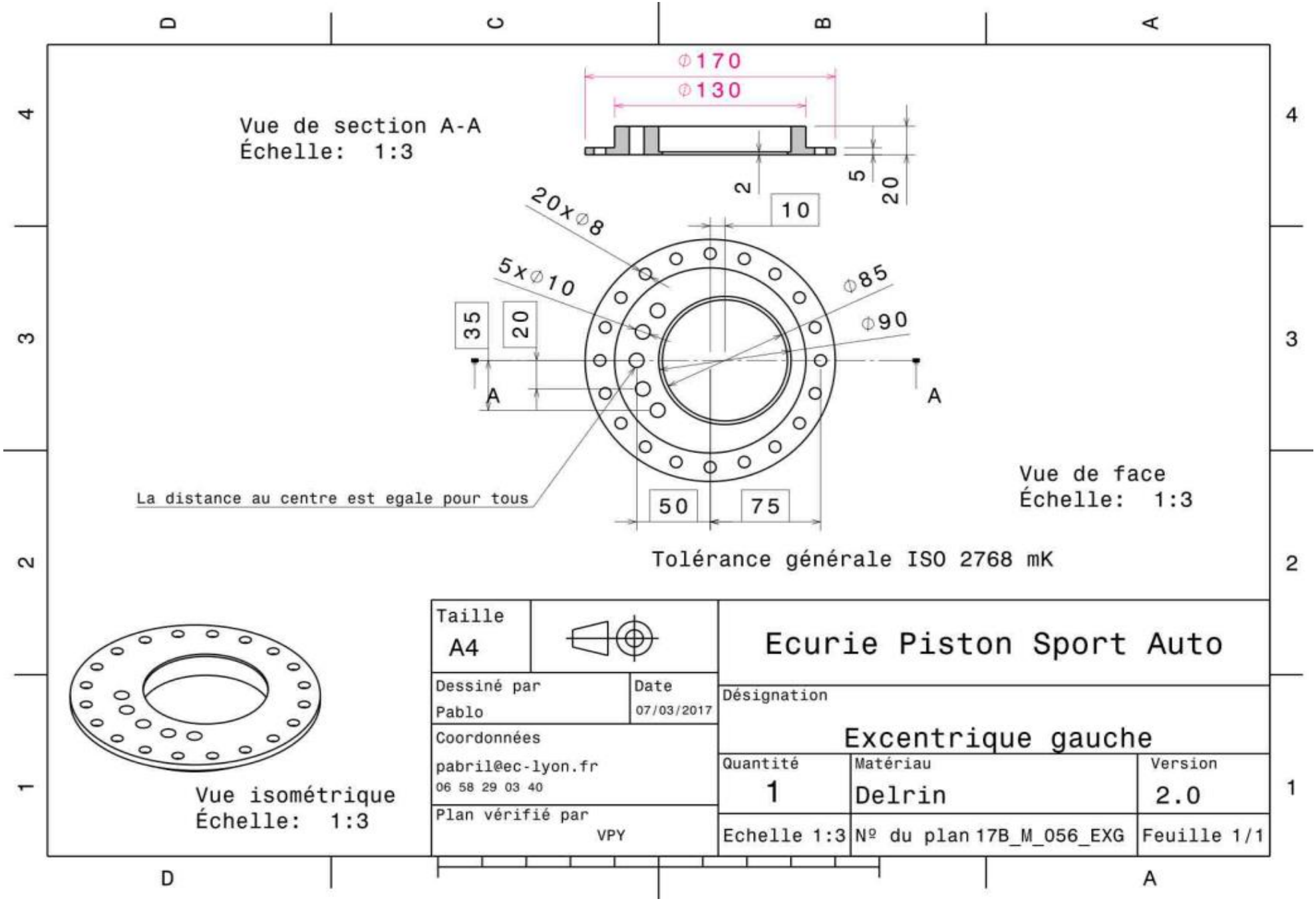
Vue de section A-A
Échelle: 1:3
⌀170
⌀130
2
5
20
10
20x⌀8
5x⌀10
⌀85
⌀90
35
20
A
A
La distance au centre est egale pour tous
50
75
Vue de face
Échelle: 1:3
Tolérance générale ISO 2768 mK
Vue isométrique
Échelle: 1:3
Taille
A4
Ecurie Piston Sport Auto
Dessiné par
Pablo
Date
07/03/2017
Désignation
Excentrique gauche
Coordonnées
pabril@ec-lyon.fr
06 58 29 03 40
Quantité
1
Matériau
Delrin
Version
2.0
Plan vérifié par
VPY
Echelle 1:3
Nº du plan 17B_M_056_EXG
Feuille 1/1

University	Ecole Centrale de Lyon	Back to BOM	**Car #**	81	**Asm Cost** $ 523.60
System	Engine & Drivetrain				**Qty** 1
Assembly	Driveshaft		**FileLink1**		
P/N Base	EN A0010		**FileLink2**		**Extended Cost** $ 523.60
Suffix	AA		**FileLink3**		
Details					

ItemOrder	Part	Part Cost	Quantity	Sub Total
10	Inboard tripod housing	$ 67.06	2	$ 134.11
20	Outboard tripod housing	$ 58.04	2	$ 116.07
30	Right axle	$ 27.12	1	$ 27.12
40	Left axle	$ 27.30	1	$ 27.30
			Sub Total	**$ 304.61**

ItemOrder	Material	Use	UnitCost	Size1	Unit1	Size2	Unit2	Area Name	Area	Length	Density	Quantity	Sub Total
10	Constant Velocity Joint, Tripod	Tripods	$ 45.00		unit							4	$ 180.00
20	Constant Velocity Joint, Boot	Boots for driveshatfts	$ 5.00		unit							4	$ 20.00
												Sub Total	**$ 200.00**

ItemOrder	Process	Use	UnitCost	Unit	Quantity	Multiplier	Mult. Val.	Sub Total
10	Assemble, 3 kg, Interference	Assemble a tripod housing and the differential	$ 0.56	unit	2		1	$ 1.12
20	Wrench <= 25,4 mm	Fasten the differential and the tripod housing	$ 1.50	unit	2		1	$ 3.00
30	Assemble, 1 kg, Interference	Assemble a boot and an axle	$ 0.19	unit	4		1	$ 0.76
40	Assemble, 1 kg, Interference	Assemble an axle and a snap ring	$ 0.19	unit	4		1	$ 0.76
50	Assemble, 1 kg, Line-on-Line	Assemble a tripod and an axle	$ 0.13	unit	4		1	$ 0.52
60	Assemble, 1 kg, Interference	Assemble an axle and a snap ring	$ 0.19	unit	4		1	$ 0.76
70	Assemble, 3 kg, Loose	Assemble an axle and a tripod housing	$ 0.19	unit	4		1	$ 0.76
80	Assemble, 1 kg, Interference	Assemble a boot and a tripod housing	$ 0.19	unit	4		1	$ 0.76
90	Assemble, 3 kg, Interference	Assemble a tripod housing and a hub	$ 0.56	unit	2		1	$ 1.12
100	Assemble, 3 kg, Interference	Assemble a tripod housing and a hub	$ 0.56	unit	2		1	$ 1.12
110	Assemble, 3 kg, Interference	assemble a hose clamp and an axle	$ 0.56	unit	2		1	$ 1.12
120	Assemble, 3 kg, Interference	Assemble a hose clamp and a tripod hosing	$ 0.56	unit	2		1	$ 1.12
130	Ratchet <= 25,4 mm	Bolt tripod housing to hub	$ 0.75	unit	2		1	$ 1.50
							Sub Total	**$ 14.42**

ItemOrder	Fastener	Use	UnitCost	Size1	Unit1	Size2	Unit2	Quantity	Sub Total
10	Retaining Ring, External	Snap ring for retaining the tripods	$ 0.09	20	mm			8	$ 0.74
20	Hose Clamp, Worm Drive	Fasten the boot	$ 0.76	65.5	mm			2	$ 1.52
30	Hose Clamp, Worm Drive	Fasten the boot	$ 0.58	20	mm			2	$ 1.16
40	Bolt, Grade 8,8 (SAE 5)	Assemble the tripod housing to the differential	$ 0.08	8	mm	20	mm	2	$ 0.16
50	Nut, Grade 8.8 (SAE 5)	Fasten the tripod housing and the hub	$ 0.49	20	mm			2	$ 0.98

University	Ecole Centrale de Lyon		Back to BOM	**Car #**	81	**Part Cost**	$ 67.06
System	Engine & Drivetrain	**FileLink1**				**Qty**	2
Assembly	Driveshaft	**FileLink2**		**FileLink1**			
Part	Inboard tripod housing	**FileLink3**		**FileLink2**		**Extended Cost**	$ 134.11
P/N Base	EN 10001			**FileLink3**			
Suffix	AA						
Details	Bought, cost as made						

ItemOrder	Material	Use	UnitCost	Size1	Unit1	Size2	Unit2	Area Name	Area	Length	Density	Quantity	Sub Total
10	Steel, Alloy	Material for the housing	$ 2.25	4.232	kg			Round 65.5 mm diam.	3.37E-03	0.160	7850	1	$ 9.52
												Sub Total	**$ 9.52**

ItemOrder	Process	Use	UnitCost	Unit	Quantity	Multiplier	Mult. Val.	Sub Total
10	Machining Setup, Install and remove	Setup and removal of the machining of the tripod housing	$ 1.30	Unit	1			$ 1.30
20	Machining	Shaping of the tripod housing	$ 0.04	cm^3	453	Material-Steel	3	$ 54.36
30	Machining Setup, Change	Setup and removal of the broach of the tripod housing	$ 0.65	Unit	1			$ 0.65
40	Broach, External	Broach of the tripod housing	$ 0.50	cm	2.45			$ 1.23
							Sub Total	**$ 57.54**

University	Ecole Centrale de Lyon		Back to BOM	**Car #**	81	**Part Cost**	$ 58.04
System	Engine & Drivetrain	**FileLink1**				**Qty**	2
Assembly	Driveshaft	**FileLink2**		**FileLink1**			
Part	Outboard tripod housing	**FileLink3**		**FileLink2**		**Extended Cost**	$ 116.07
P/N Base	EN 10002			**FileLink3**			
Suffix	AA						
Details	Bought, cost as made						

ItemOrder	Material	Use	UnitCost	Size1	Unit1	Size2	Unit2	Area Name	Area	Length	Density	Quantity	Sub Total
10	Steel, Alloy	Material for the tripod housing	$ 2.25	3.439	kg			Round 65,5mm diam.	3.37E-03	0.130	7850	1	$ 7.74
												Sub Total	**$ 7.74**

ItemOrder	Process	Use	UnitCost	Unit	Quantity	Multiplier	Mult. Val.	Sub Total
10	Machining Setup, Install and remove	Setup and removal of the machining of the tripod housing	$ 1.30	Unit	1			$ 1.30
20	Machining	Shaping of the tripod housing	$ 0.04	cm^3	378	Material-Steel	3	$ 45.36
30	Machining Setup, Change	Setup and removal of the broach of the tripod housing	$ 0.65	Unit	1			$ 0.65
40	Broach, External	Broach of the tripod housing	$ 0.50	cm	4.2			$ 2.10
50	Machining Setup, Change	Setup and removal of the threading of the tripod housing	$ 0.65	Unit	1			$ 0.65
60	Threading, External (machining)	Threading of the tripod housing	$ 0.10	cm	2.4			$ 0.24
							Sub Total	**$ 50.30**

University	Ecole Centrale de Lyon		Back to BOM	**Car #**	81	**Part Cost**	$ 27.12
System	Engine & Drivetrain	**FileLink1**				**Qty**	1
Assembly	Driveshaft	**FileLink2**		**FileLink1**			
Part	Right axle	**FileLink3**		**FileLink2**		**Extended Cost**	$ 27.12
P/N Base	EN 10003			**FileLink3**			
Suffix	AA						
Details	Bought, cost as made						

ItemOrder	Material	Use	UnitCost	Size1	Unit1	Size2	Unit2	Area Name	Area	Length	Density	Quantity	Sub Total
10	Steel, Alloy	Material for driveshaft axle	$ 2.25	1.349	kg			Round 24mm diam.	4.52E-04	0.380	7850	1	$ 3.04
												Sub Total	**$ 3.04**

ItemOrder	Process	Use	UnitCost	Unit	Quantity	Multiplier	Mult. Val.	Sub Total
10	Machining Setup, Install and remove	Setup and removal of the machining of the axle	$ 1.30	Unit	1			$ 1.30
20	Machining	Shaping of the axle	$ 0.04	cm^3	140.2	Material-Steel	3	$ 16.83
30	Machining Setup, Change	Setup and removal of the broach of the axle	$ 0.65	Unit	1			$ 0.65
40	Broach, External	Broach of the axle	$ 0.50	cm	10.6			$ 5.30
							Sub Total	**$ 24.08**

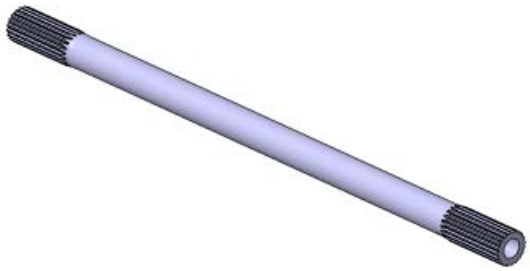

University	Ecole Centrale de Lyon		Back to BOM	**Car #**	81	**Part Cost**	$ 27.30
System	Engine & Drivetrain	**FileLink1**				**Qty**	1
Assembly	Driveshaft	**FileLink2**		**FileLink1**			
Part	Left axle	**FileLink3**		**FileLink2**		**Extended Cost**	$ 27.30
P/N Base	EN 10004			**FileLink3**			
Suffix	AA						
Details	Bought, cost as made						

ItemOrder	Material	Use	UnitCost	Size1	Unit1	Size2	Unit2	Area Name	Area	Length	Density	Quantity	Sub Total
10	Steel, Alloy	Material for driveshaft axle	$ 2.25	1.385	kg			Round 24mm diam.	4.52E-04	0.390	7850	1	$ 3.12
												Sub Total	**$ 3.12**

ItemOrder	Process	Use	UnitCost	Unit	Quantity	Multiplier	Mult. Val.	Sub Total
10	Machining Setup, Install and remove	Setup and removal of the machining of the axle	$ 1.30	Unit	1			$ 1.30
20	Machining	Shaping of the axle	$ 0.04	cm^3	135.7	Material-Steel	3	$ 16.29
30	Machining Setup, Install and remove	Setup and removal of the broach of the axle	$ 1.30	Unit	1			$ 1.30
40	Broach, External	Broach of the axle	$ 0.50	cm	10.6			$ 5.30
							Sub Total	**$ 24.19**

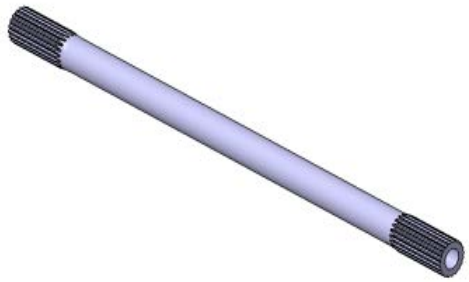

University	Ecole Centrale de Lyon	Back to BOM	**Car #**	81	**Asm Cost** $ 125.77
System	Engine & Drivetrain				**Qty** 1
Assembly	Chain Set		**FileLink1**		
P/N Base	EN A0011		**FileLink2**		**Extended Cost** $ 125.77
Suffix	AA		**FileLink3**		
Details					

ItemOrder	Part	Part Cost	Quantity	Sub Total
10	Front Sprocket	$ 23.42	1	$ 23.42
20	Rear Sprocket	$ 39.08	1	$ 39.08
30	Rear sprocket adapter	$ 29.16	1	$ 29.16
40	Chain Shield	$ 8.79	1	$ 8.79
50	Tabs	$ 1.01	2	$ 2.03
			Sub Total	**$ 102.48**

ItemOrder	Material	Use	UnitCost	Size1	Unit1	Size2	Unit2	Area Name	Area	Length	Density	Quantity	Sub Total
10	Chain		$ 0.05	60	mm							60	$ 3.00
20	Paint	Tabs and shield painting	$ 10.00	0.081	m^2							0.081	$ 0.81
												Sub Total	**$ 3.81**

ItemOrder	Process	Use	UnitCost	Unit	Quantity	Multiplier	Mult. Val.	Sub Total
10	Weld	Weld tab to frame	$ 0.15	cm	2			$ 0.30
20	Aerosol apply	Tabs and shield painting	$ 5.25	m^2	0.081			$ 0.43
30	Assemble, 3 kg, Interference	Put the rear sprocket adapter on the differential	$ 0.56	Unit	1			$ 0.56
40	Assemble, 1 kg, Interference	Put the centering pin in the rear sprocket adapter	$ 0.19	Unit	5			$ 0.95
50	Assemble, 1 kg, Interference	Put the retaining ring in the groove	$ 0.19	Unit	1			$ 0.19
60	Assemble, 1 kg, Loose	Place bolts and washers	$ 0.06	Unit	15			$ 0.90
70	Ratchet <= 25.4 mm	Bolt rear sprocket to adapter	$ 0.75	Unit	5			$ 3.75
80	Reaction Tool <= 25.4 mm	Bolt rear sprocket to adapter	$ 0.25	Unit	5			$ 1.25
90	Assemble, 1 kg, Interference	Put the front sprocket in place	$ 0.19	Unit	1			$ 0.19
100	Ratchet <= 25.4 mm	Bolt front sprocket to engine	$ 0.75	Unit	1			$ 0.75
110	Assemble, 5 kg, Line-on-Line	Put chain in place	$ 0.63	Unit	1			$ 0.63
120	Adjustment - Misc.	Chain tension	$ 5.00	Unit	1			$ 5.00
130	Assemble, 1 kg, Loose	Place bolts and washers	$ 0.06	Unit	3			$ 0.18
140	Ratchet <= 25.4 mm	Bolt upper chain shield to tab	$ 0.75	Unit	1			$ 0.75
150	Reaction Tool <= 25.4 mm	Bolt upper chain shield to tab	$ 0.25	Unit	1			$ 0.25
160	Assemble, 1 kg, Loose	Place bolts and washers	$ 0.06	Unit	3			$ 0.18
170	Ratchet <= 25.4 mm	Bolt lower chain shield to tab	$ 0.75	Unit	1			$ 0.75
180	Reaction Tool <= 25.4 mm	Bolt lower chain shield to tab	$ 0.25	Unit	1			$ 0.25
							Sub Total	**$ 17.26**

ItemOrder	Fastener	Use	UnitCost	Size1	Unit1	Size2	Unit2	Quantity	Sub Total
10	Bolt, Grade 8,8 (SAE 5)	Assemble the rear sprocket with the adapter	$ 0.07	6	mm	30	mm	5	$ 0.33
20	Nut, Grade 8,8 (SAE 5)	Assemble the rear sprocket with the adapter	$ 0.07	6	mm			5	$ 0.35
30	Washer, Grade 8,8 (SAE 5)	Assemble the rear sprocket with the adapter	$ 0.01		Unit			10	$ 0.10
40	Bolt, Grade 8,8 (SAE 5)	Assemble the chain shield with the tab	$ 0.04	6	mm	20	mm	1	$ 0.04
50	Nut, Grade 8,8 (SAE 5)	Assemble the chain shield with the tab	$ 0.04	6	mm			1	$ 0.04

University	Ecole Centrale de Lyon		Back to BOM	**Car #**	81	**Part Cost**	$ 23.42
System	Engine & Drivetrain	**FileLink1**				**Qty**	1
Assembly	Driveshaft	**FileLink2**		**FileLink1**			
Part	Front Sprocket	**FileLink3**		**FileLink2**		**Extended Cost**	$ 23.42
P/N Base	EN 11001			**FileLink3**			
Suffix	AA						
Details	Bought, cost as made						

ItemOrder	Material	Use	UnitCost	Size1	Unit1	Size2	Unit2	Area Name	Area	Length	Density	Quantity	Sub Total
10	Steel, Mild	Material for front sprocket	$ 2.25	0.809	kg			Round 81mm diam.	5.15E-03	0.020	7850	1	$ 1.82
												Sub Total	**$ 1.82**

ItemOrder	Process	Use	UnitCost	Unit	Quantity	Multiplier	Mult. Val.	Sub Total
10	Machining Setup, Install and remove	Setup and removal of the machining of the sprocket	$ 1.30	Unit	1			$ 1.30
20	Machining	Shaping of the sprocket	$ 0.04	cm^3	62.99	Material-steel	3	$ 7.56
30	Gear Shaping (hobbing)		$ 0.50	cm	7.50	Material-steel	3	$ 11.25
40	Machining Setup, Change	Setup and removal of the broach of the sprocket	$ 0.65	Unit	1			$ 0.65
50	Broach, Internal	Broach of the sprocket	$ 0.50	cm	1.68			$ 0.84
							Sub Total	**$ 21.60**

University	Ecole Centrale de Lyon		Back to BOM	**Car #**	81	**Part Cost**	$ 39.08
System	Engine & Drivetrain	**FileLink1**				**Qty**	1
Assembly	Driveshaft	**FileLink2**		**FileLink1**			
Part	Rear Sprocket	**FileLink3**		**FileLink2**		**Extended Cost**	$ 39.08
P/N Base	EN 11002			**FileLink3**			
Suffix	AA						
Details	Bought, cost as made						

ItemOrder	Material	Use	UnitCost	Size1	Unit1	Size2	Unit2	Area Name	Area	Length	Density	Quantity	Sub Total
10	Steel, Mild	Material for the rear sprocket	$ 2.25	1.359	kg			Round 210mm diam.	3.46E-02	0.005	7850	1	$ 3.06
												Sub Total	**$ 3.06**

ItemOrder	Process	Use	UnitCost	Unit	Quantity	Multiplier	Mult. Val.	Sub Total
10	Machining Setup, Install and remove	Setup and removal of the machining of the sprocket	$ 1.30	Unit	1			$ 1.30
20	Gear Shaping (hobbing)		$ 0.50	cm	19.50	Material-steel	3	$ 29.25
30	Machining Setup, Change	Setup and removal for laser cut of the sprocket	$ 0.65	Unit	1		1	$ 0.65
40	Laser cut	Shaping of the sprocket	$ 0.01	cm^3	160.8	Material-Steel	3	$ 4.82
							Sub Total	**$ 36.02**

University	Ecole Centrale de Lyon		Back to BOM	**Car #**	81	**Part Cost**	$ 29.16
System	Engine & Drivetrain	Drawing :	FileLink1			**Qty**	1
Assembly	Driveshaft	**FileLink2**		**FileLink1**			
Part	Rear sprocket adapter	**FileLink3**		**FileLink2**		**Extended Cost**	$ 29.16
P/N Base	EN 11003			**FileLink3**			
Suffix	AA						
Details							

ItemOrder	Material	Use	UnitCost	Size1	Unit1	Size2	Unit2	Area Name	Area	Length	Density	Quantity	Sub Total
10	Aluminium, Premium	Material for the adapter	$ 4.20	2.076	kg			Round 190mm diam.	2.84E-02	0.027	2712	1	$ 8.72
												Sub Total	**$ 8.72**

ItemOrder	Process	Use	UnitCost	Unit	Quantity	Multiplier	Mult. Val.	Sub Total
10	Machining Setup, Install and remove	Setup and removal of the machining of the adapter	$ 1.30	Unit	1			$ 1.30
20	Machining	Shaping of the adapter	$ 0.04	cm^3	444.78			$ 17.79
30	Broach, Internal	Broach of the adapter	$ 0.50	cm	2.7			$ 1.35
							Sub Total	**$ 20.44**

EN 11003

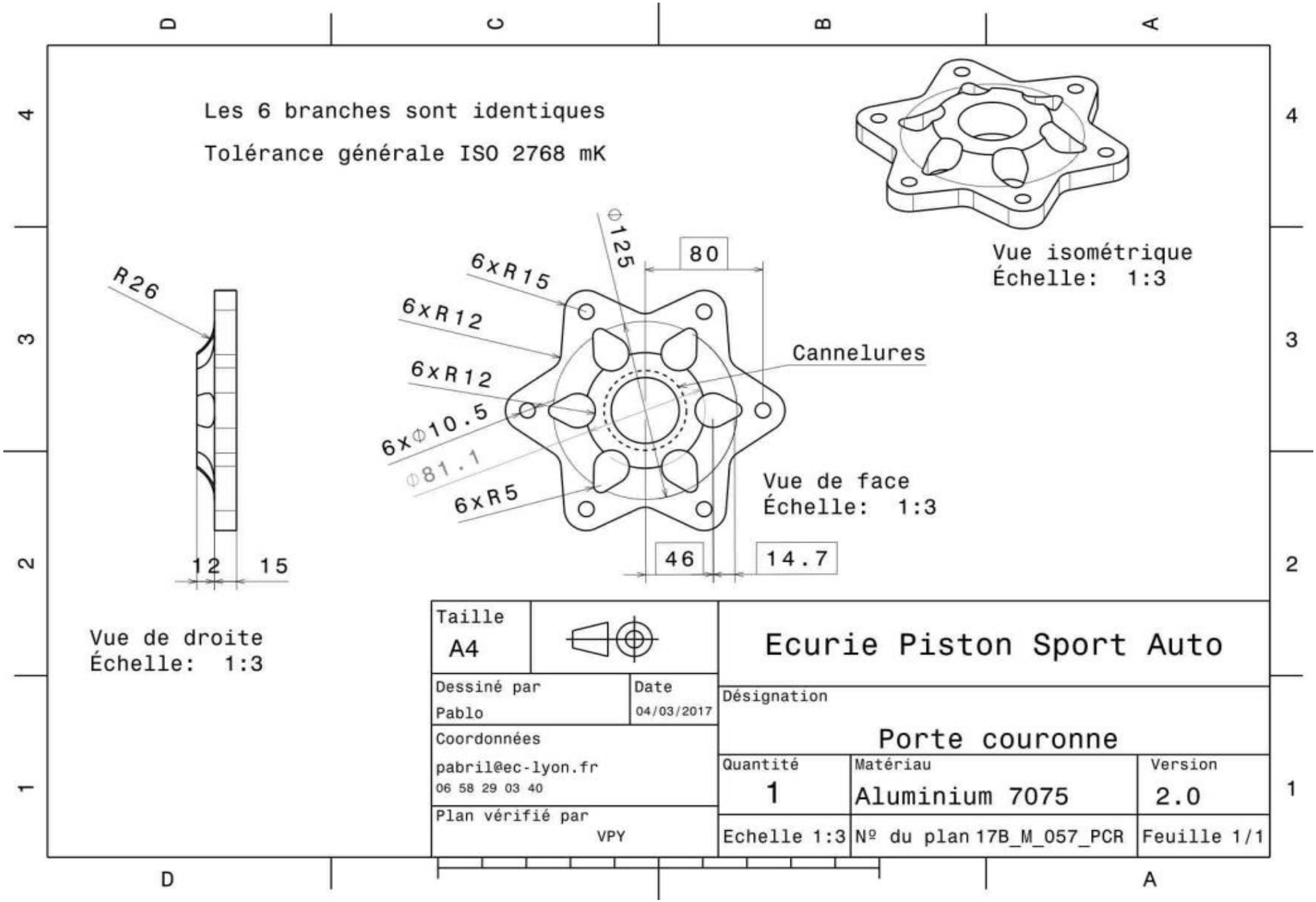
Les 6 branches sont identiques
Tolérance générale ISO 2768 mK
Vue isométrique
Échelle: 1:3
R26
12
15
Vue de droite
Échelle: 1:3
6xR15
6xR12
6xR12
6x⌀10.5
⌀81.1
6xR5
⌀125
80
Cannelures
46
14.7
Vue de face
Échelle: 1:3
Taille
A4
Dessiné par
Pablo
Date
04/03/2017
Coordonnées
pabril@ec-lyon.fr
06 58 29 03 40
Plan vérifié par
VPY
Ecurie Piston Sport Auto
Désignation
Porte couronne
Quantité
1
Matériau
Aluminium 7075
Version
2.0
Echelle 1:3
Nº du plan 17B_M_057_PCR
Feuille 1/1

University	Ecole Centrale de Lyon			Back to BOM	**Car #**	81	**Part Cost**	$	8.79
System	Engine & Drivetrain	Drawing :	FileLink1				**Qty**		1
Assembly	Driveshaft		**FileLink2**		**FileLink1**				
Part	Chain Shield		**FileLink3**		**FileLink2**		**Extended Cost**	$	8.79
P/N Base	EN 11004				**FileLink3**				
Suffix	AA								
Details									

ItemOrder	Material	Use	UnitCost	Size1	Unit1	Size2	Unit2	Area Name	Area	Length	Density	Quantity	Sub Total
10	Steel, Mild	Material for the upper chain shield	$ 2.25	1.266	kg			Rectangular area 60 x 896 mm	5.38E-02	0.003	7850	1	$ 2.85
												Sub Total	**$ 2.85**

ItemOrder	Process	Use	UnitCost	Unit	Quantity	Multiplier	Mult. Val.	Sub Total
10	Machining Setup, Install and remove	Setup and removal of the machining of the shield	$ 1.30	Unit	1			$ 1.30
20	Laser Cut	Shaping of the chain shield	$ 0.01	cm	121.5	Material-Steel	3	$ 3.65
30	Sheet metal bends	Bend to shape	$ 0.25	bend	4			$ 1.00
							Sub Total	**$ 5.95**

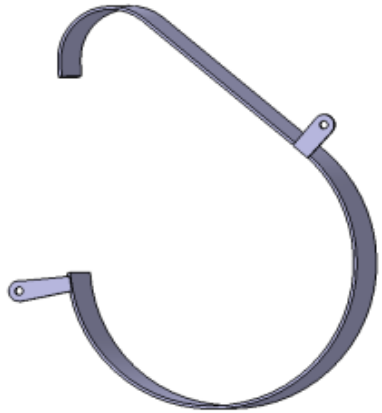

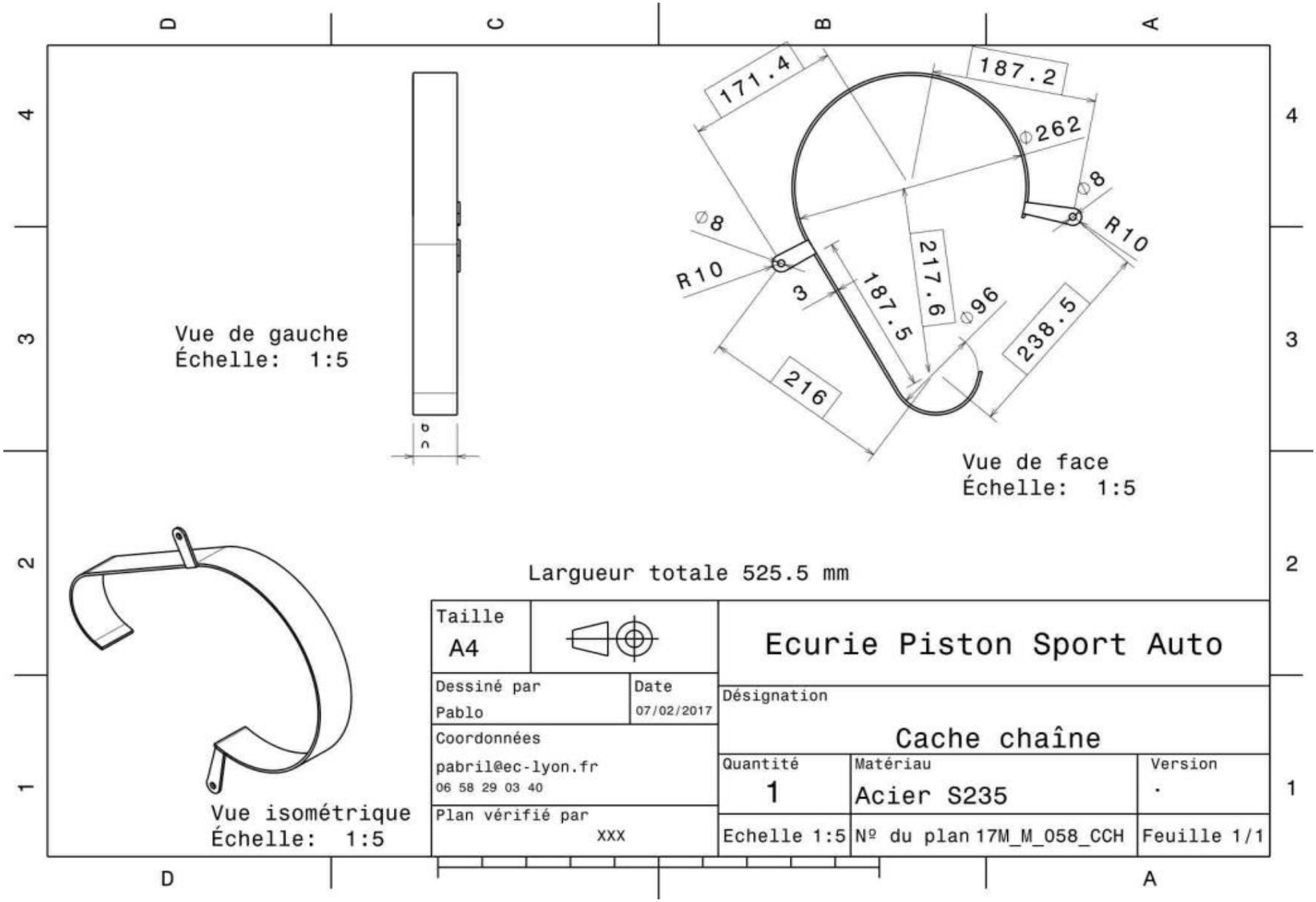
Vue de gauche
Échelle: 1:5
Vue de face
Échelle: 1:5
Vue isométrique
Échelle: 1:5
Largueur totale 525.5 mm
171.4
187.2
⌀262
⌀8
R10
⌀8
R10
3
187.5
217.6
⌀96
238.5
216
Taille
A4
Dessiné par
Pablo
Date
07/02/2017
Coordonnées
pabril@ec-lyon.fr
06 58 29 03 40
Plan vérifié par
XXX
Ecurie Piston Sport Auto
Désignation
Cache chaîne
Quantité
1
Matériau
Acier S235
Version
.
Echelle 1:5
Nº du plan 17M_M_058_CCH
Feuille 1/1

University	Ecole Centrale de Lyon		Back to BOM	**Car #**	81	**Part Cost**	$	1.01
System	Engine & Drivetrain	Drawing :	FileLink1			**Qty**		2
Assembly	Driveshaft	**FileLink2**		**FileLink1**				
Part	Tabs	**FileLink3**		**FileLink2**		**Extended Cost**	$	2.03
P/N Base	EN 11005			**FileLink3**				
Suffix	AA							
Details								

ItemOrder	Material	Use	UnitCost	Size1	Unit1	Size2	Unit2	Area Name	Area	Length	Density	Quantity	Sub Total
10	Steel, Mild	Mounts material	2.25	0.019	kg			Rectangular area 45mm x 27 mm	1.22E-03	0.002	7850	1	$ 0.04
												Sub Total	**$ 0.04**

ItemOrder	Process	Use	UnitCost	Unit	Quantity	Multiplier	Mult. Val.	Sub Total
10	Machining Setup, Install and remove	Setup for machining	$ 1.30	Unit	1	2 parts cut from a single machine setup	0.5	$ 0.65
20	Laser cut	Tabs cut	$ 0.01	cm	10.67	Material, Steel	3	$ 0.32
							Sub Total	**$ 0.97**

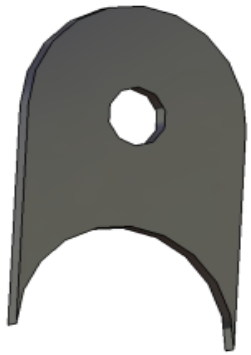

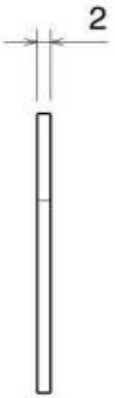

Vue de face
Échelle: 1:1

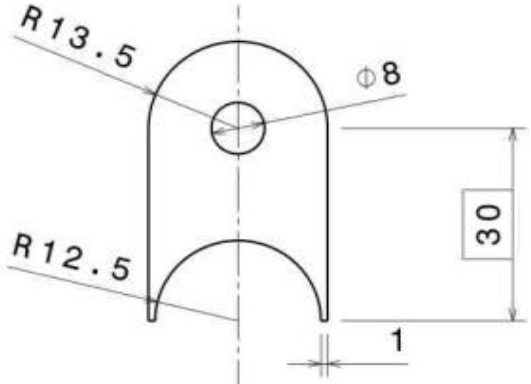

Vue de gauche
Échelle: 1:1

Tolérance générale ISO 2768 mK

Vue isométrique
Échelle: 1:1

Taille A4		Ecurie Piston Sport Auto
Dessiné par Pablo	Date 13/12/2016	Désignation: Chape support cache chaîne
Coordonnées pabril@ec-lyon.fr 06 58 29 03 40		Quantité 2 / Matériau Acier S235 / Version 1.0
Plan vérifié par AGE		Echelle 1:1 / Nº du plan 17M_M_051_CCC / Feuille 1/1

Ecurie Piston Sport Auto

ÉCOLE CENTRALE LYON

CAR #81

Frame & Body

University	Ecole Centrale de Lyon	Back to BOM	**Car #**	81	**Asm Cost**	$	791.21
System	Frame & Body				**Qty**		1
Assembly	Frame		**FileLink1**				
P/N Base	FR A0001		**FileLink2**		**Extended Cost**	$	791.21
Suffix	AA		**FileLink3**				
Details	Tubular and space frame						

ItemOrder	Part	Part Cost	Quantity	Sub Total
10	Bend Round steel tubing	$ 21.35	1	$ 21.35
20	Straight round steel tubing	$ 248.23	1	$ 248.23
30	Anti-intrusion plate	$ 9.13	1	$ 9.13
			Sub Total	**$ 278.71**

ItemOrder	Material	Use	UnitCost	Size1	Unit1	Size2	Unit2	Area Name	Area	Length	Density	Quantity	Sub Total
10	Paint	Painting of the frame	$ 10.00	2.98	m^2							2.98	$ 29.80
												Sub Total	**$ 29.80**

ItemOrder	Process	Use	UnitCost	Unit	Quantity	Multiplier	Mult. Val.	Sub Total
10	Weld round tubing		$ 0.38	cm	999		1	$ 379.62
20	Weld round tubing	Anti-intrusion plate	$ 0.38	cm	20		1	$ 7.60
30	Aerosol Apply	Painting of the frame	$ 5.25	m^2	2.98		1	$ 15.65
							Sub Total	**$ 402.87**

ItemOrder	Tooling	Use	UnitCost	Unit	Quantity	PVF	FractionIncluded	Sub Total
10	Welds - Welding Fixiture	Frame Welding Fixiture	$ 500.00	point	279	3000	1	$ 46.50
20	Welds - Welding Fixiture	Anti-intrusion fixiture	$ 500.00	point	20	300	1	$ 33.33
							Sub Total	**$ 79.83**

University	École Centrale de Lyon		Back to BOM	**Car #**	81	**Part Cost**	$ 21.35
System	Frame & Body	**FileLink1**				**Qty**	1
Assembly	Frame	**FileLink2**		**FileLink1**			
Part	Bend Round steel tubing	**FileLink3**		**FileLink2**		**Extended Cost**	$ 21.35
P/N Base	FR 01001			**FileLink3**			
Suffix	AA						
Details	Hoops of the frame						

ItemOrder	Material	Use	UnitCost	Size1	Unit1	Size2	Unit2	Area Name	Area	Length	Density	Quantity	Sub Total
10	Steel, Alloy	Main Hoop	$ 2.25	3.176	kg			Round, 30 x 2 mm	1.76E-04	2.300	7850	1	$ 7.15
20	Steel, Alloy	Front Hoop	$ 2.25	2.113	kg			Round, 30 x 2 mm	1.76E-04	1.530	7850	1	$ 4.75
												Sub Total	**$ 11.90**

ItemOrder	Process	Use	UnitCost	Unit	Quantity	Multiplier	Mult. Val.	Sub Total
10	Tube bends	Main Hoop bends	$ 0.75	Bend	3		1	$ 2.25
20	Tube bends	Front Hoop bends	$ 0.75	Bend	4		1	$ 3.00
30	Tube cut	Cut to proper length	$ 0.15	cm	8		1	$ 1.20
40	Tube end preperation for welding		$ 0.75	end	4		1	$ 3.00
							Sub Total	**$ 9.45**

University	École Centrale de Lyon		Back to BOM	**Car #**	81	**Part Cost**	$ 248.23
System	Frame & Body	**FileLink1**				**Qty**	1
Assembly	Frame	**FileLink2**		**FileLink1**			
Part	Straight round steel tubing	**FileLink3**		**FileLink2**		**Extended Cost**	$ 248.23
P/N Base	FR 01002			**FileLink3**			
Suffix	AA						
Details							

ItemOrder	Material	Use	UnitCost	Size1	Unit1	Size2	Unit2	Area Name	Area	Length	Density	Quantity	Sub Total
10	Steel, Alloy	Shoulder Harness Mounting Bar	$ 2.25	0.635	kg			Round, 30 x 2 mm	1.76E-04	0.460	7850	1	$ 1.43
20	Steel, Alloy	Side impact structure, Front Bulkhead, Roll Hoop Bracing, Front Bulkhead Support, Main Hoop Bracing Support	$ 2.25	11.502	kg			Round, 30 x 1.5mm	1.34E-04	10.910	7850	1	$ 25.88
30	Steel, Alloy	Jacking point & Miscellaneous	$ 2.25	11.371	kg			Round, 25 x 1.5 mm	1.11E-04	13.080	7850	1	$ 25.58
40	Steel, Alloy	Miscellaneous	$ 2.25	2.799	kg			Round, 20 x 1.5 mm	8.72E-05	4.090	7850	1	$ 6.30
50	Steel, Alloy	Miscellaneous	$ 2.25	2.752	kg			Round, 15 x 1.5 mm	6.36E-05	5.510	7850	1	$ 6.19
												Sub Total	**$ 65.38**

ItemOrder	Process	Use	UnitCost	Unit	Quantity	Multiplier	Mult. Val.	Sub Total
10	Tube cut	Cut to proper length	$ 0.15	cm	329		1	$ 49.35
20	Tube end preperation for welding		$ 0.75	end	178		1	$ 133.50
							Sub Total	**$ 182.85**

University	École Centrale de Lyon		Back to BOM	**Car #**	81	**Part Cost**	$ 9.13
System	Frame & Body	**FileLink1**				**Qty**	1
Assembly	Frame	**FileLink2**		**FileLink1**			
Part	Anti-intrusion plate	**FileLink3**		**FileLink2**		**Extended Cost**	$ 9.13
P/N Base	FR 01003			**FileLink3**			
Suffix	AA						
Details							

ItemOrder	Material	Use	UnitCost	Size1	Unit1	Size2	Unit2	Area Name	Area	Length	Density	Quantity	Sub Total
10	Steel, Alloy	Anti-Intrusion plate	$ 2.25	1.790	kg			Rectangular area, 380x400 mm	1.52E-01	1.50E-03	7850	1	$ 4.03
												Sub Total	**$ 4.03**

ItemOrder	Process	Use	UnitCost	Unit	Quantity	Multiplier	Mult. Val.	Sub Total
10	Machining Setup, Install and Remove	Setup for metal shearing	$ 1.30	unit	1		1	$ 1.30
20	Sheet metal shearing		$ 0.25	cut	4		1	$ 1.00
30	Drilled holes < 25.4 mm dia.		$ 0.35	hole	8		1	$ 2.80
							Sub Total	**$ 5.10**

University	Ecole Centrale de Lyon	Back to BOM	**Car #**	81	**Asm Cost** $ 46.71
System	Frame & Body				**Qty** 1
Assembly	Impact Attenuator		**FileLink1**		
P/N Base	FR A0002		**FileLink2**		**Extended Cost** $ 46.71
Suffix	AA		**FileLink3**		
Details	FSAE Impact Attenuator				

ItemOrder	Part	Part Cost	Quantity	Sub Total
10	Impact Attenuator	$ 35.19	1	$ 35.19
			Sub Total	**$ 35.19**

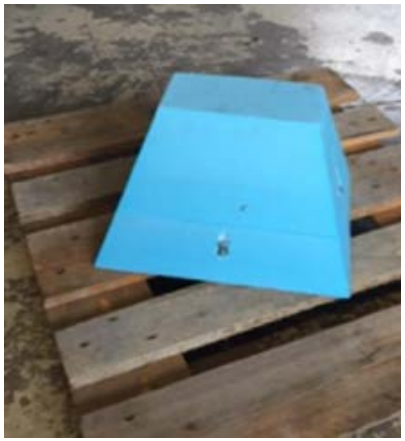

ItemOrder	Process	Use	UnitCost	Unit	Quantity	Multiplier	Mult. Val.	Sub Total
10	Assemble, 1 kg, Loose	Assemble Attenuator on IA Plate	$ 0.06	Unit	1		1	$ 0.06
20	Ratchet <= 25.4 mm	Bolt Attenuator on Plate	$ 0.75	Unit	8		1	$ 6.00
30	Reaction Tool <= 25.4 mm	Bolt Attenuator on Plate	$ 0.25	Unit	8		1	$ 2.00
							Sub Total	**$ 8.06**

ItemOrder	Fastener	Use	UnitCost	Size1	Unit1	Size2	Unit2	Quantity	Sub Total
10	Bolt,Grade 8.8 (SAE 5)		$ 0.39	8	mm	80	mm	6	$ 2.32
20	Bolt,Grade 8.8 (SAE 5)		$ 0.53	8	mm	100	mm	1	$ 0.53
30	Bolt,Grade 8.8 (SAE 5)		$ 0.21	8	mm	50	mm	1	$ 0.21
40	Nut, Grade 8.8 (SAE 5)		$ 0.04	8	mm			8	$ 0.36
50	Washer, Grade 8.8 (SAE 5)		$ 0.01	1	Unit			4	$ 0.04
								Sub Total	**$ 3.45**

University	Ecole Centrale de Lyon		Back to BOM	**Car #**	81	**Part Cost**	$ 35.19
System	Frame & Body	**FileLink1**				**Qty**	1
Assembly	Impact Attenuator	**FileLink2**		**FileLink1**			
Part	Impact Attenuator	**FileLink3**		**FileLink2**		**Extended Cost**	$ 35.19
P/N Base	FR 02001			**FileLink3**			
Suffix	AA						
Details	FSAE Impact Attenuator Type 15, Bought, Cost as Made						

ItemOrder	Material	Use	UnitCost	Size1	Unit1	Size2	Unit2	Area Name	Area	Length	Density	Quantity	Sub Total
10	Foam, Expanding, Non-Structural	First part of foam	$ 15.00	0.229	kg			Rectangular area, 355x305 mm	1.08E-01	0.085	25	1	$ 3.44
20	Foam, Expanding, Non-Structural	Second part of foam	$ 15.00	0.153	kg			Rectangular area, 305x237 mm	7.23E-02	0.085	25	1	$ 2.30
30	Foam, Expanding, Non-Structural	Third part of foam	$ 15.00	0.085	kg	40	mm	Rectangular area, 237x169 mm	4.01E-02	0.085	25	1	$ 1.27
40	Adhesive	Assemble foam parts, cost included in process											$ -
												Sub Total	**$ 7.01**

ItemOrder	Process	Use	UnitCost	Unit	Quantity	Multiplier	Mult. Val.	Sub Total
10	Non-metallic cutting > 76.2 mm	Cut first part side	$ 1.40	cut	1	Material - Foam	0.33	$ 0.46
20	Brush apply	Apply glue on first part	$ 0.02	cm^2	723			$ 14.46
30	Non-metallic cutting > 76.2 mm	Cut second part side	$ 1.40	cut	1	Material - Foam	0.33	$ 0.46
40	Brush apply	Apply glue on second part	$ 0.02	cm^2	401			$ 8.02
50	Non-metallic cutting > 76.2 mm	Cut third part side	$ 1.40	cut	1	Material - Foam	0.33	$ 0.46
60	Assemble, 1 kg, Loose	Glue 3 parts	$ 0.06	Unit	2			$ 0.12
70	Drilled holes < 25.4 mm dia.	Drill holes for bolts	$ 0.35	Hole	8			$ 2.80
80	Drilled holes < 25.4 mm dia.	Drill larger holes at each extremities of the part	$ 0.35	Hole	4			$ 1.40
							Sub Total	**$ 28.19**

University	Ecole Centrale de Lyon	Back to BOM	**Car #**	81	**Asm Cost** $ 129.35
System	Frame & Body				**Qty** 1
Assembly	Pedal Assembly		**FileLink1**		
P/N Base	FR A0003		**FileLink2**		**Extended Cost** $ 129.35
Suffix	AA		**FileLink3**		
Details	Adjustable 2-pedal assembly				

ItemOrder	Part	Part Cost	Quantity	Sub Total
10	Balance Bar Adjusting Roller	$ 2.30	1	$ 2.30
20	Balance Bar Head	$ 3.35	2	$ 6.70
30	Brake Pedal	$ 5.38	1	$ 5.38
40	Brake Pedal Support	$ 4.01	2	$ 8.03
50	Brake Pedal Upper Axis	$ 3.71	1	$ 3.71
60	Cladding Holding	$ 1.97	1	$ 1.97
70	Connecting-Rod	$ 0.97	2	$ 1.94
80	Foot Support	$ 2.99	2	$ 5.97
90	Front Rails Mount	$ 0.75	4	$ 3.00
100	Overtravel Switch Support	$ 3.09	1	$ 3.09
110	Pedal Rail	$ 3.10	2	$ 6.19
120	Platform Foot Support	$ 3.71	1	$ 3.71
130	Rear Rails Mount	$ 0.75	4	$ 2.99
140	Throttle Pedal	$ 8.15	1	$ 8.15
150	Throttle Pedal Abutment	$ 1.97	1	$ 1.97
160	Throttle Pedal Axis Cable	$ 2.00	1	$ 2.00
170	Throttle Pedal Support	$ 4.11	2	$ 8.22
			Sub Total	**$ 75.32**

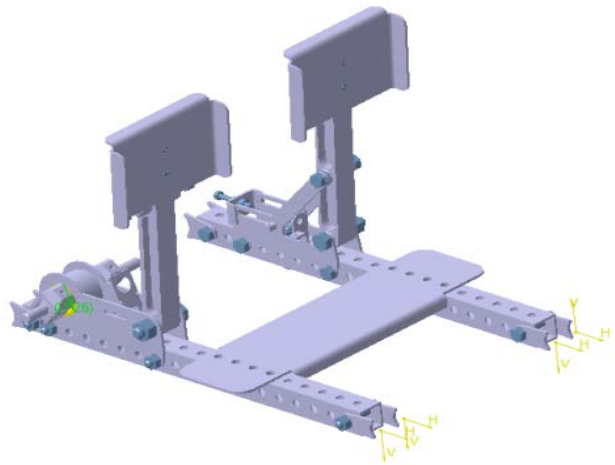

ItemOrder	Material	Use	UnitCost	Size1	Unit1	Size2	Unit2	Area Name	Area	Length	Density	Quantity	Sub Total
10	Paint	Protecting the Front and Rear Rails Mounts from rust	$ 10.00	0.012	m^2							0.012	$ 0.12
20	Cable adjuster	Adjust the throttle cable in its sheath	$ 1.00									1	$ 1.00
30	Spring, Tension (General)	Throttle Pedal return springs	$ 1.00									2	$ 2.00
40	Bushing, Student Built	Avoiding friction in the Throttle and Brake Pedals rotation	$ -									6	$ -
												Sub Total	**$ 3.12**

ItemOrder	Process	Use	UnitCost	Unit	Quantity	Multiplier	Mult. Val.	Sub Total
10	Weld	Welding the Front and Rear Rails Mounts on the frame	$ 0.15	cm	35.5		1	$ 5.33
20	Aerosol Apply	Protecting the Front and Rear Rails Mounts from rust	$ 5.25	m^2	0.012		1	$ 0.06
30	Liquid Applicator Gun	Gluing the Ballance Bar Cylinder in the Ballance Bar Adusting Roller	$ 0.02	cm	6.4		1	$ 0.13
40	Assemble, 1 kg, Loose	Inserting the Rails between the Front and Rear Rails Mounts	$ 0.06	unit	4		1	$ 0.24
50	Wrench <= 25.4 mm	Fixing the Rails to the Front and Rear Rails Mounts	$ 1.50	unit	4		1	$ 6.00
60	Reaction Tool <= 25.4 mm	Fixing the Rails to the Front and Rear Rails Mounts	$ 0.25	unit	4		1	$ 1.00
70	Assemble, 1 kg, Loose	Positioning the Platform Foot Support on the Pedal Rails	$ 0.06	unit	1		1	$ 0.06
80	Screwdriver > 1 Turn	Fixing the Platform Foot Support on the Pedal Rails	$ 0.50	unit	4		1	$ 2.00
90	Reaction Tool <= 25.4 mm	Fixing the Platform Foot Support on the Pedal Rails	$ 0.25	unit	4		1	$ 1.00
100	Assemble, 1 kg, Loose	Positioning the Cladding Holding on the right Pedal Rail	$ 0.06	unit	1		1	$ 0.06
110	Wrench <= 25.4 mm	Fixing the Cladding Holding on the right Pedal Rail	$ 1.50	unit	1		1	$ 1.50
120	Reaction Tool <= 25.4 mm	Fixing the Cladding Holding on the right Pedal Rail	$ 0.25	unit	1		1	$ 0.25
130	Assemble, 1 kg, Loose	Inserting the bronze brushing in the Throttle Pedal	$ 0.06	unit	4		1	$ 0.24
140	Assemble, 1 kg, Loose	Inserting the Throttle Pedal Axis Cable in the Throttle Pedal Supports	$ 0.06	unit	1		1	$ 0.06
150	Assemble, 1 kg, Loose	Positioning the Throttle Pedal Supports on the right Pedal Rail	$ 0.06	unit	2		1	$ 0.12
160	Wrench <= 25.4 mm	Fixing the Throttle Pedal Supports on the right Pedal Rail	$ 1.50	unit	2		1	$ 3.00
170	Reaction Tool <= 25.4 mm	Fixing the Throttle Pedal Supports on the right Pedal Rail	$ 0.25	unit	2		1	$ 0.50
180	Assemble, 1 kg, Line-on-Line	Positioning and fixing the Connecting-Rods on the Throttle Pedal Axis Cable	$ 0.13	unit	2		1	$ 0.26
190	Assemble, 1 kg, Loose	Positioning the Throttle Pedal on the Throttle Pedal Supports	$ 0.06	unit	1		1	$ 0.06
200	Wrench <= 25.4 mm	Fixing the Throttle Pedal on the Throttle Pedal Supports	$ 1.50	unit	1		1	$ 1.50
210	Reaction Tool <= 25.4 mm	Fixing the Throttle Pedal on the Throttle Pedal Supports	$ 0.25	unit	1		1	$ 0.25
220	Assemble, 1 kg, Loose	Positioning the Connecting-Rods on the Throttle Pedal	$ 0.06	unit	1		1	$ 0.06
230	Wrench <= 25.4 mm	Fixing the Connecting-Rods on the Throttle Pedal	$ 1.50	unit	1		1	$ 1.50
240	Reaction Tool <= 6.35 mm	Fixing the Connecting-Rods on the Throttle Pedal	$ 0.25	unit	1		1	$ 0.25
250	Assemble, 1 kg, Loose	Positioning the Throttle Pedal Abutment on the Throttle Pedal Supports	$ 0.06	unit	1		1	$ 0.06
260	Wrench <= 6.35 mm	Fixing the Throttle Pedal Abutment on the Throttle Pedal Supports	$ 1.00	unit	4		1	$ 4.00

270	Reaction Tool <= 6.35 mm	Fixing the Throttle Pedal Abutment on the Throttle Pedal Supports	$ 0.25	unit	4		1	$ 1.00
280	Assemble, 1 kg, Loose	Positioning a screw in the Throttle Pedal Abutment	$ 0.06	unit	1		1	$ 0.06
290	Hand, Loose <= 6.35 mm	Fixing this screw in the Throttle Pedal Abutment	$ 0.25	unit	2		1	$ 0.50
300	Assemble, 1 kg, Loose	Positioning the cable adjuster in the Cladding Holding	$ 0.06	unit	1		1	$ 0.06
310	Hand, Loose <= 6.35 mm	Fixing the cable adjuster in the Cladding Holding	$ 0.25	unit	1		1	$ 0.25
320	Assemble, 1 kg, Loose	Inserting the springs on the assembly	$ 0.06	unit	4		1	$ 0.24
330	Assemble, 1 kg, Loose	Positioning the kill switch in the Overtravel Switch Support	$ 0.06	unit	1		1	$ 0.06
340	Hand, Loose <= 25.4 mm	Fixing the kill switch in the Overtravel Switch Support	$ 0.50	unit	1		1	$ 0.50
350	Assemble, 1 kg, Loose	Positioning the Balance Bar in its cylinder	$ 0.06	unit	1		1	$ 0.06
360	Assemble, 1 kg, Loose	Positioning the Balance Bar Assembly between the Brake Pedal Supports	$ 0.06	unit	2		1	$ 0.12
370	Assemble, 1 kg, Loose	Positioning the Brake Pedal Supports on the left Pedal Rail	$ 0.06	unit	2		1	$ 0.12
380	Wrench <= 25.4 mm	Fixing the Brake Pedal Supports on the left Pedal Rail	$ 1.50	unit	2		1	$ 3.00
390	Reaction Tool <= 25.4 mm	Fixing the Brake Pedal Supports on the left Pedal Rail	$ 0.25	unit	2		1	$ 0.50
400	Assemble, 1 kg, Loose	Inserting the bronze brushing in the Brake Pedal	$ 0.06	unit	2		1	$ 0.12
410	Assemble, 1 kg, Loose	Positioning the Brake Pedal on the Brake Pedal Supports	$ 0.06	unit	1		1	$ 0.06
420	Wrench <= 25.4 mm	Fixing the Brake Pedal on the Brake Pedal Supports	$ 1.50	unit	1		1	$ 1.50
430	Reaction Tool <= 25.4 mm	Fixing the Brake Pedal on the Brake Pedal Supports	$ 0.25	unit	1		1	$ 0.25
440	Assemble, 1 kg, Loose	Positioning the Overtravel Switch Assembly between the Brake Pedal Supports	$ 0.06	unit	1		1	$ 0.06
450	Wrench <= 6.35 mm	Fixing the Overtravel Switch Support on the Brake Pedal Supports	$ 1.00	unit	1		1	$ 1.00
460	Reaction Tool <= 6.35 mm	Fixing the Overtravel Switch Support on the Brake Pedal Supports	$ 0.25	unit	1		1	$ 0.25
470	Assemble, 1 kg, Line-on-Line	Inserting the Brake Pedal Upper Axis in the Brake Pedal	$ 0.13	unit	1		1	$ 0.13
480	Hand, Loose <= 25.4 mm	Fixing the master-cylinders in the Balance Bar Head	$ 0.50	unit	2		1	$ 1.00
490	Assemble, 1 kg, Loose	Positioning the master-cylinders on the Brake Pedal Upper Axis	$ 0.06	unit	2		1	$ 0.12
500	Reaction Tool <= 6.35 mm	Fixing the master-cylinders on the Brake Pedal Upper Axis	$ 0.25	unit	2		1	$ 0.50
510	Assemble, 1 kg, Loose	Positioning the foot supports on the Throttle and Brake Pedals	$ 0.06	unit	2		1	$ 0.12
520	Screwdriver > 1 Turn	Fixing the foot supports on the Throttle and Brake Pedals	$ 0.50	unit	4		1	$ 2.00
530	Reaction Tool <= 6.35 mm	Fixing the foot supports on the Throttle and Brake Pedals	$ 0.25	unit	4		1	$ 1.00
							Sub Total	**$ 44.07**

ItemOrder	Fastener	Use	UnitCost	Size1	Unit1	Size2	Unit2	Quantity	Sub Total
10	Bold, Grade 8.8 (SAE 5)	Fixing the Pedal Rails on the Front and the Rear Rails Mounts	$0.16	8	mm	40	mm	4	$ 0.65
20	Nut, Grade 8.8 (SAE 5)	Fixing the Pedal Rails on the Front and the Rear Rails Mounts	$0.04	8	mm			4	$ 0.18
30	Bold, Grade 8.8 (SAE 5)	Fixing the Platform Foot Support on the Pedal Rails	$0.16	8	mm	40	mm	2	$ 0.32
40	Nut, Grade 8.8 (SAE 5)	Fixing the Platform Foot Support on the Pedal Rails	$0.04	8	mm			2	$ 0.09
50	Bold, Grade 8.8 (SAE 5)	Fixing the Cladding Holding on the right Pedal Rail	$0.16	8	mm	40	mm	1	$ 0.16
60	Nut, Grade 8.8 (SAE 5)	Fixing the Cladding Holding on the right Pedal Rail	$0.04	8	mm			1	$ 0.04
70	Bold, Grade 8.8 (SAE 5)	Fixing the Throttle Pedal Supports on the right Pedal Rail	$0.16	8	mm	40	mm	2	$ 0.32
80	Nut, Grade 8.8 (SAE 5)	Fixing the Throttle Pedal Supports on the right Pedal Rail	$0.04	8	mm			2	$ 0.09
90	Bold, Grade 8.8 (SAE 5)	Fixing the Throttle Pedal on the Throttle Pedal Supports	$0.27	10	mm	40	mm	1	$ 0.27
100	Nut, Grade 8.8 (SAE 5)	Fixing the Throttle Pedal on the Throttle Pedal Supports	$0.04	8	mm			1	$ 0.04
110	Retaining Ring, External	Translationally locking the Throttle Pedal Axis Cable in the Throttle Pedal Supports	$0.03	8	mm			2	$ 0.05
120	Bold, Grade 8.8 (SAE 5)	Fixing the Connecting-Rods on the Throttle Pedal	$0.21	8	mm	50	mm	1	$ 0.21
130	Nut, Grade 8.8 (SAE 5)	Fixing the Connecting-Rods on the Throttle Pedal	$0.03	6	mm			1	$ 0.03
140	Washer, Grade 8.8 (SAE 5)	Fixing the Connecting-Rods on the Throttle Pedal	$0.01	1	unit			4	$ 0.04
150	Bold, Grade 8.8 (SAE 5)	Fixing the Throttle Pedal Abutment on the Throttle Pedal Supports	$0.01	3	mm	8	mm	4	$ 0.04
160	Nut, Grade 8.8 (SAE 5)	Fixing the Throttle Pedal Abutment on the Throttle Pedal Supports	$0.02	3	mm			4	$ 0.07
170	Bold, Grade 8.8 (SAE 5)	Realizing the abutment for the throttle pedal	$0.06	5	mm	40	mm	1	$ 0.06
180	Nut, Grade 8.8 (SAE 5)	Realizing the abutment for the throttle pedal	$0.02	5	mm			2	$ 0.05
190	Bold, Grade 8.8 (SAE 5)	Fixing the Brake Pedal Supports on the left Pedal Rail	$0.16	8	mm	40	mm	2	$ 0.32
200	Nut, Grade 8.8 (SAE 5)	Fixing the Brake Pedal Supports on the left Pedal Rail	$0.04	8	mm			2	$ 0.09
210	Bold, Grade 8.8 (SAE 5)	Fixing the Brake Pedal on the Brake Pedal Supports	$0.42	12	mm	40	mm	1	$ 0.42
220	Nut, Grade 8.8 (SAE 5)	Fixing the Brake Pedal on the Brake Pedal Supports	$0.07	10	mm			1	$ 0.07
230	Bold, Grade 8.8 (SAE 5)	Fixing the Overtravel Switch Support on the Brake Pedal Supports	$0.05	5	mm	35	mm	1	$ 0.05
240	Nut, Grade 8.8 (SAE 5)	Fixing the Overtravel Switch Support on the Brake Pedal Supports	$0.02	5	mm			1	$ 0.02
250	Bold, Grade 8.8 (SAE 5)	(Head cut) Fixing the master-cylinders on the Balance Bar Heads	$0.08	6	mm	35	mm	2	$ 0.15
260	Nut, Grade 8.8 (SAE 5)	Allowing master-cylinders adjustment	$0.03	6	mm			2	$ 0.06
270	Washer, Grade 8.8 (SAE 5)	Adjusting the master-cylinders position	$0.01	1	unit			2	$ 0.02
280	Retaining Ring, External	Translationally locking the Brake Pedal Upper Axis on the Brake Pedal	$0.06	15	mm			1	$ 0.06
290	Nut, Grade 8.8 (SAE 5)	Fixing the master-cylinders on the Brake Pedal Upper Axis	$0.03	6	mm			2	$ 0.06
300	Bold, Grade 8.8 (SAE 5)	Fixing the foot supports on the Throttle and Brake Pedals	$0.02	4	mm	12	mm	4	$ 0.06
310	Nut, Grade 8.8 (SAE 5)	Fixing the foot supports on the Throttle and Brake Pedals	$0.02	4	mm			4	$ 0.08

Sub Total	**$ 4.18**

ItemOrder	Tooling	Use	UnitCost	Unit	Quantity	PVF	FractionIncluded	Sub Total
10	Welds - Welding Fixture	Weld parts to the frame	$ 500.00	point	16	3000	1	$ 2.67
							Sub Total	**$ 2.67**

University	Ecole Centrale de Lyon			Back to BOM	**Car #**	81	**Part Cost**	$	2.30
System	Frame & Body	Drawing :	FileLink1				**Qty**		1
Assembly	Pedal Assembly		**FileLink2**		**FileLink1**				
Part	Balance Bar Adjusting Roller		**FileLink3**		**FileLink2**		**Extended Cost**	$	2.30
P/N Base	FR 03001				**FileLink3**				
Suffix	AA								
Details	To fix the Balance Bar Cylinder								

ItemOrder	Material	Use	UnitCost	Size1	Unit1	Size2	Unit2	Area Name	Area	Length	Density	Quantity	Sub Total
10	Aluminum, Normal (per kg)	Raw material	$ 4.20	0.046	kg							1	$ 0.19
												Sub Total	**$ 0.19**

ItemOrder	Process	Use	UnitCost	Unit	Quantity	Multiplier	Mult. Val.	Sub Total
10	Machining Setup, Install and remove		$ 1.30	unit	1			$ 1.30
20	Machining	Inner	$ 0.04	cm^3	3.22		1	$ 0.13
30	Machining Setup, Change		$ 0.65	unit	1			$ 0.65
40	Machining	Outer	$ 0.04	cm^3	0.6		1	$ 0.02
							Sub Total	**$ 2.10**

FR 03001

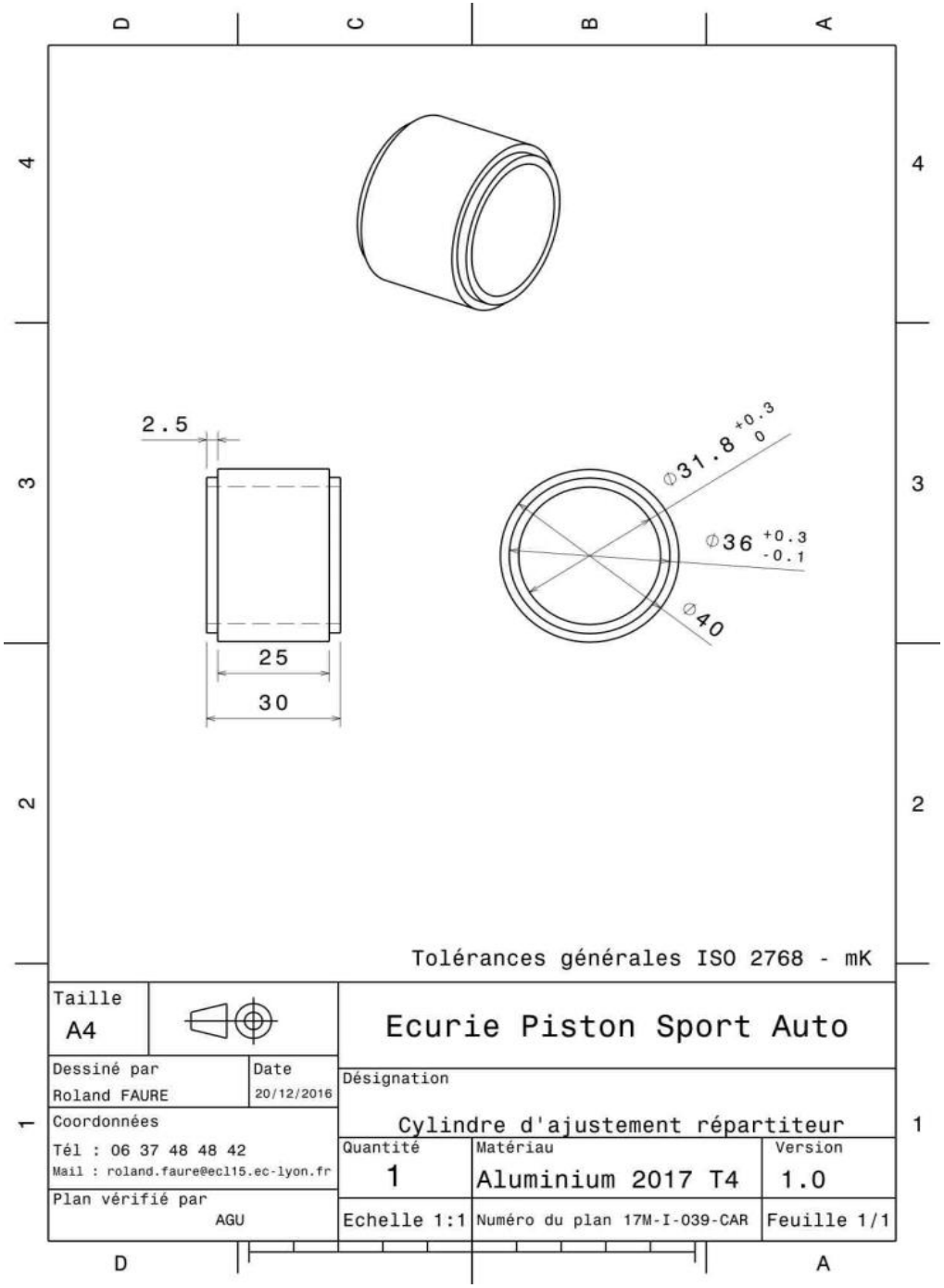
2.5
25
30
Ø31.8 +0.3 0
Ø36 +0.3 -0.1
Ø40
Tolérances générales ISO 2768 - mK
Taille
A4
Ecurie Piston Sport Auto
Dessiné par
Roland FAURE
Date
20/12/2016
Désignation
Cylindre d'ajustement répartiteur
Coordonnées
Tél : 06 37 48 48 42
Mail : roland.faure@ecl15.ec-lyon.fr
Quantité
1
Matériau
Aluminium 2017 T4
Version
1.0
Plan vérifié par
AGU
Echelle 1:1
Numéro du plan 17M-I-039-CAR
Feuille 1/1

University	Ecole Centrale de Lyon			Back to BOM	**Car #**	81	**Part Cost**	$	3.35
System	Frame & Body	Drawing :	FileLink1				**Qty**		2
Assembly	Pedal Assembly		**FileLink2**		**FileLink1**				
Part	Balance Bar Head		**FileLink3**		**FileLink2**		**Extended Cost**	$	6.70
P/N Base	FR 03002				**FileLink3**				
Suffix	AA								
Details	To fix the master-cylinders								

ItemOrder	Material	Use	UnitCost	Size1	Unit1	Size2	Unit2	Area Name	Area	Length	Density	Quantity	Sub Total
10	Aluminum, Normal (per kg)	Raw material	$ 4.20	0.049	kg								$ 0.21
												Sub Total	**$ 0.21**

ItemOrder	Process	Use	UnitCost	Unit	Quantity	Multiplier	Mult. Val.	Sub Total
10	Machining Setup, Install and remove		$ 1.30	unit	1		1	$ 1.30
20	Machining		$ 0.04	cm^3	5.67		1	$ 0.23
30	Machining Setup, Change		$ 0.65	unit	1		1	$ 0.65
40	Machining		$ 0.04	cm^3	3.98		1	$ 0.16
50	Machining Setup, Change		$ 0.65	unit	1		1	$ 0.65
60	Machining		$ 0.04	cm^3	0.94		1	$ 0.04
70	Threading, Internal (machining)		$ 0.10	cm	1.2		1	$ 0.12
							Sub Total	**$ 3.14**

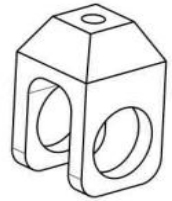

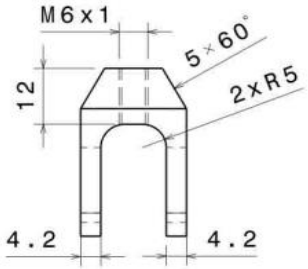

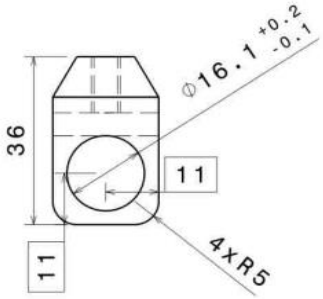

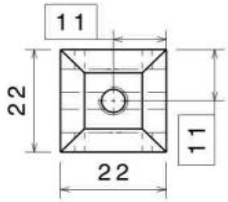

Les quatre chanfreins sont identiques

Brut : barre à section carrée 22mm

Tolérances générales ISO 2768 - mK

Taille A4		Ecurie Piston Sport Auto	
Dessiné par Roland FAURE	Date 20/12/2016	Désignation Chape MC	
Coordonnées Tél : 06 37 48 48 42 Mail : roland.faure@ecl15.ec-lyon.fr		Quantité 2	Matériau Aluminium 2017 T4	Version 1.0
Plan vérifié par AGU		Echelle 1:1	Numéro du plan 17M-I-038-CMC	Feuille 1/1

University	Ecole Centrale de Lyon		Back to BOM	**Car #**	81	**Part Cost**	$ 5.38
System	Frame & Body	Drawing :	FileLink1			**Qty**	1
Assembly	Pedal Assembly		**FileLink2**	**FileLink1**			
Part	Brake Pedal		**FileLink3**	**FileLink2**		**Extended Cost**	$ 5.38
P/N Base	FR 03003			**FileLink3**			
Suffix	AA						
Details	Branch of the brake pedal						

ItemOrder	Material	Use	UnitCost	Size1	Unit1	Size2	Unit2	Area Name	Area	Length	Density	Quantity	Sub Total
10	Aluminum, Normal (per kg)	Raw material	$ 4.20	0.285	kg								$ 1.20
												Sub Total	**$ 1.20**

ItemOrder	Process	Use	UnitCost	Unit	Quantity	Multiplier	Mult. Val.	Sub Total
10	Machining Setup, Install and remove		$ 1.30	unit	1		1	$ 1.30
20	Machining		$ 0.04	cm^3	21.58		1	$ 0.86
30	Machining Setup, Change		$ 0.65	unit	1		1	$ 0.65
40	Machining		$ 0.04	cm^3	8.6		1	$ 0.34
50	Machining Setup, Change		$ 0.65	unit	1		1	$ 0.65
60	Machining		$ 0.04	cm^3	9.49		1	$ 0.38
							Sub Total	**$ 4.19**

FR 03003

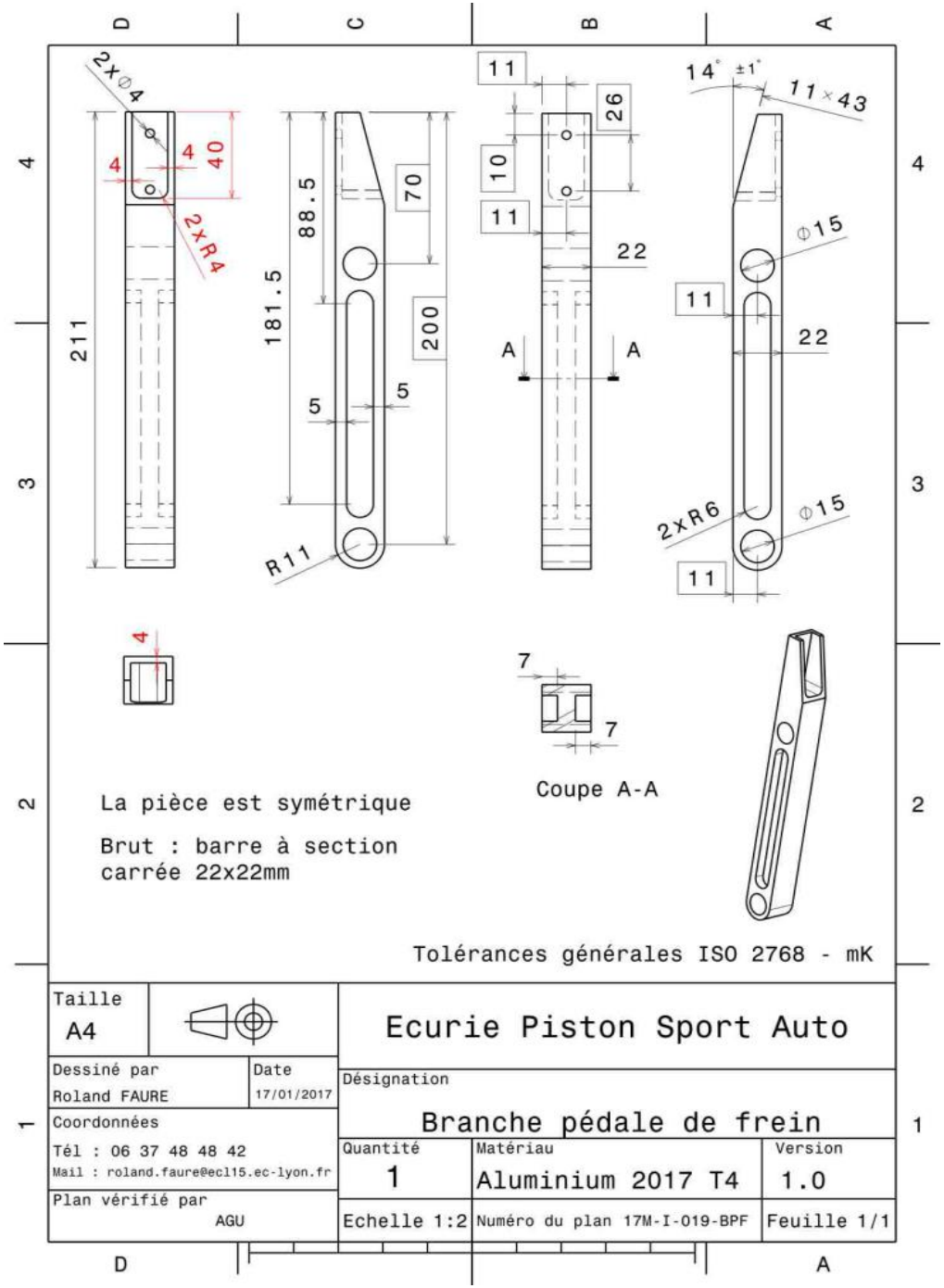
2x⌀4
4
4
40
2xR4
211
88.5
181.5
70
200
5
5
R11
11
26
10
11
22
A
A
14° ±1°
11×43
⌀15
11
22
2xR6
⌀15
11
4
7
7
Coupe A-A
La pièce est symétrique
Brut : barre à section carrée 22x22mm
Tolérances générales ISO 2768 - mK
Taille
A4
Ecurie Piston Sport Auto
Dessiné par
Roland FAURE
Date
17/01/2017
Désignation
Branche pédale de frein
Coordonnées
Tél : 06 37 48 48 42
Mail : roland.faure@ecl15.ec-lyon.fr
Quantité
1
Matériau
Aluminium 2017 T4
Version
1.0
Plan vérifié par
AGU
Echelle 1:2
Numéro du plan 17M-I-019-BPF
Feuille 1/1

University	Ecole Centrale de Lyon			Back to BOM	**Car #**	81	**Part Cost**	$	4.01
System	Frame & Body	Drawing :	FileLink1				**Qty**		2
Assembly	Pedal Assembly		**FileLink2**		**FileLink1**				
Part	Brake Pedal Support		**FileLink3**		**FileLink2**		**Extended Cost**	$	8.03
P/N Base	FR 03004				**FileLink3**				
Suffix	AA								
Details	Fixing the branch to the rails								

ItemOrder	Material	Use	UnitCost	Size1	Unit1	Size2	Unit2	Area Name	Area	Length	Density	Quantity	Sub Total
10	Steel, Alloy (per kg)	Raw material	$ 2.25	0.188	kg								$ 0.42
												Sub Total	**$ 0.42**

ItemOrder	Process	Use	UnitCost	Unit	Quantity	Multiplier	Mult. Val.	Sub Total
10	Machining Setup, Install and remove		$ 1.30	unit	1			$ 1.30
20	Laser Cut		$ 0.01	cm	76.39	Material - Steel	3	$ 2.29
							Sub Total	**$ 3.59**

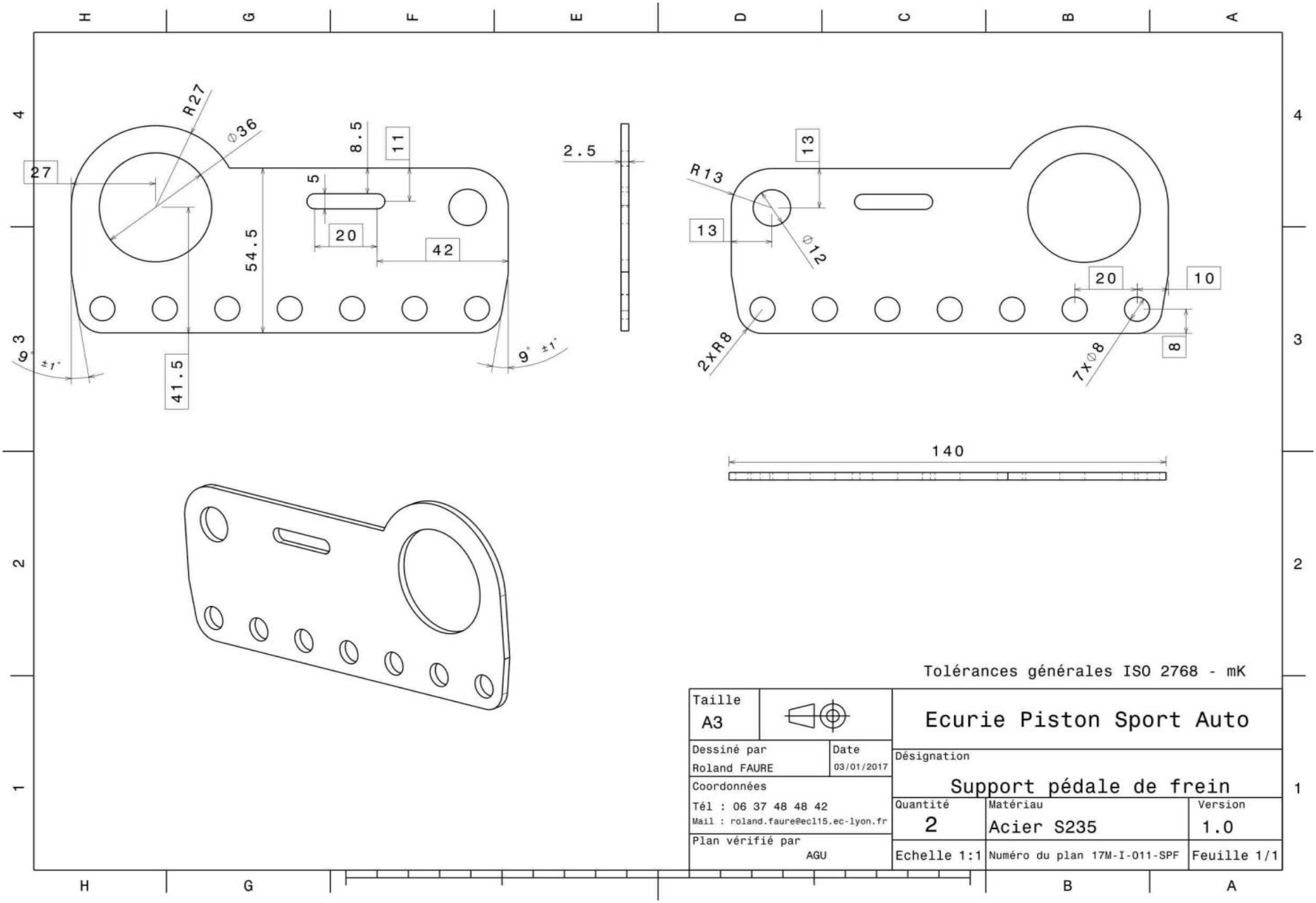
R27
⌀36
27
8.5
11
5
20
42
54.5
41.5
9° ±1°
9° ±1°
2.5
13
R13
13
⌀12
20
10
8
2xR8
7x⌀8
140
Tolérances générales ISO 2768 - mK
Taille
A3
Ecurie Piston Sport Auto
Dessiné par
Roland FAURE
Date
03/01/2017
Désignation
Support pédale de frein
Coordonnées
Tél : 06 37 48 48 42
Mail : roland.faure@ecl15.ec-lyon.fr
Quantité
2
Matériau
Acier S235
Version
1.0
Plan vérifié par
AGU
Echelle 1:1
Numéro du plan 17M-I-011-SPF
Feuille 1/1

University	Ecole Centrale de Lyon		Back to BOM	**Car #**	81	**Part Cost**	$ 3.71
System	Frame & Body	Drawing :	FileLink1			**Qty**	1
Assembly	Pedal Assembly		**FileLink2**	**FileLink1**			
Part	Brake Pedal Upper Axis		**FileLink3**	**FileLink2**		**Extended Cost**	$ 3.71
P/N Base	FR 03005			**FileLink3**			
Suffix	AA						
Details	Axis to fix the master-cylinders to the branch						

ItemOrder	Material	Use	UnitCost	Size1	Unit1	Size2	Unit2	Area Name	Area	Length	Density	Quantity	Sub Total
10	Steel, Alloy (per kg)	Raw material	$ 2.25	0.155	kg								$ 0.35
												Sub Total	**$ 0.35**

ItemOrder	Process	Use	UnitCost	Unit	Quantity	Multiplier	Mult. Val.	Sub Total
10	Machining Setup, Install and remove		$ 1.30	unit	1		1	$ 1.30
20	Machining		$ 0.04	cm^3	4.38	Material - Steel	3	$ 0.53
30	Threading, External (machining)		$ 0.10	cm	1.02		1	$ 0.10
40	Machining Setup, Change		$ 0.65	unit	1		1	$ 0.65
50	Machining		$ 0.04	cm^3	5.67	Material - Steel	3	$ 0.68
60	Threading, External (machining)		$ 0.10	cm	1.02		1	$ 0.10
							Sub Total	**$ 3.36**

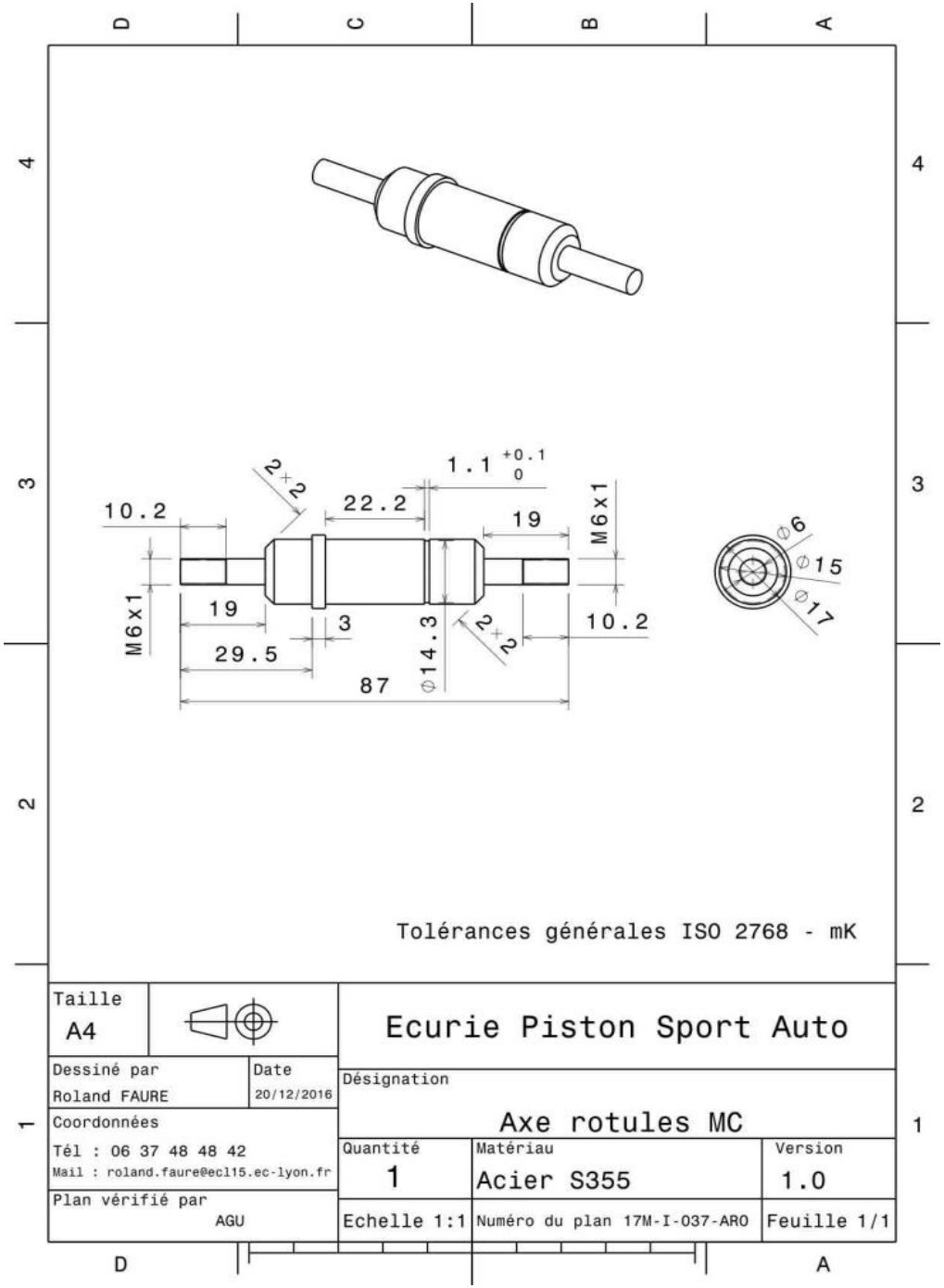
10.2
2
2
22.2
1.1 +0.1 0
19
M6x1
M6x1
19
3
29.5
87
Φ14.3
2
2
10.2
Φ6
Φ15
Φ17
Tolérances générales ISO 2768 - mK
Taille
A4
Ecurie Piston Sport Auto
Dessiné par
Roland FAURE
Date
20/12/2016
Désignation
Axe rotules MC
Coordonnées
Tél : 06 37 48 48 42
Mail : roland.faure@ecl15.ec-lyon.fr
Quantité
1
Matériau
Acier S355
Version
1.0
Plan vérifié par
AGU
Echelle 1:1
Numéro du plan 17M-I-037-ARO
Feuille 1/1

University	Ecole Centrale de Lyon		Back to BOM	**Car #**	81	**Part Cost**	$ 1.97
System	Frame & Body	Drawing :	FileLink1			**Qty**	1
Assembly	Pedal Assembly		**FileLink2**	**FileLink1**			
Part	Cladding Holding		**FileLink3**	**FileLink2**		**Extended Cost**	$ 1.97
P/N Base	FR 03006			**FileLink3**			
Suffix	AA						
Details	To maintain the cladding						

ItemOrder	Material	Use	UnitCost	Size1	Unit1	Size2	Unit2	Area Name	Area	Length	Density	Quantity	Sub Total
10	Steel, Alloy (per kg)	Raw material	$ 2.25	0.015	kg								$ 0.03
												Sub Total	**$ 0.03**

ItemOrder	Process	Use	UnitCost	Unit	Quantity	Multiplier	Mult. Val.	Sub Total
10	Machining Setup, Install and remove		$ 1.30	unit	1			$ 1.30
20	Laser Cut		$ 0.01	cm	12.75	Material - Steel	3	$ 0.38
30	Sheet metal bends		$ 0.25	bend	1			$ 0.25
							Sub Total	**$ 1.93**

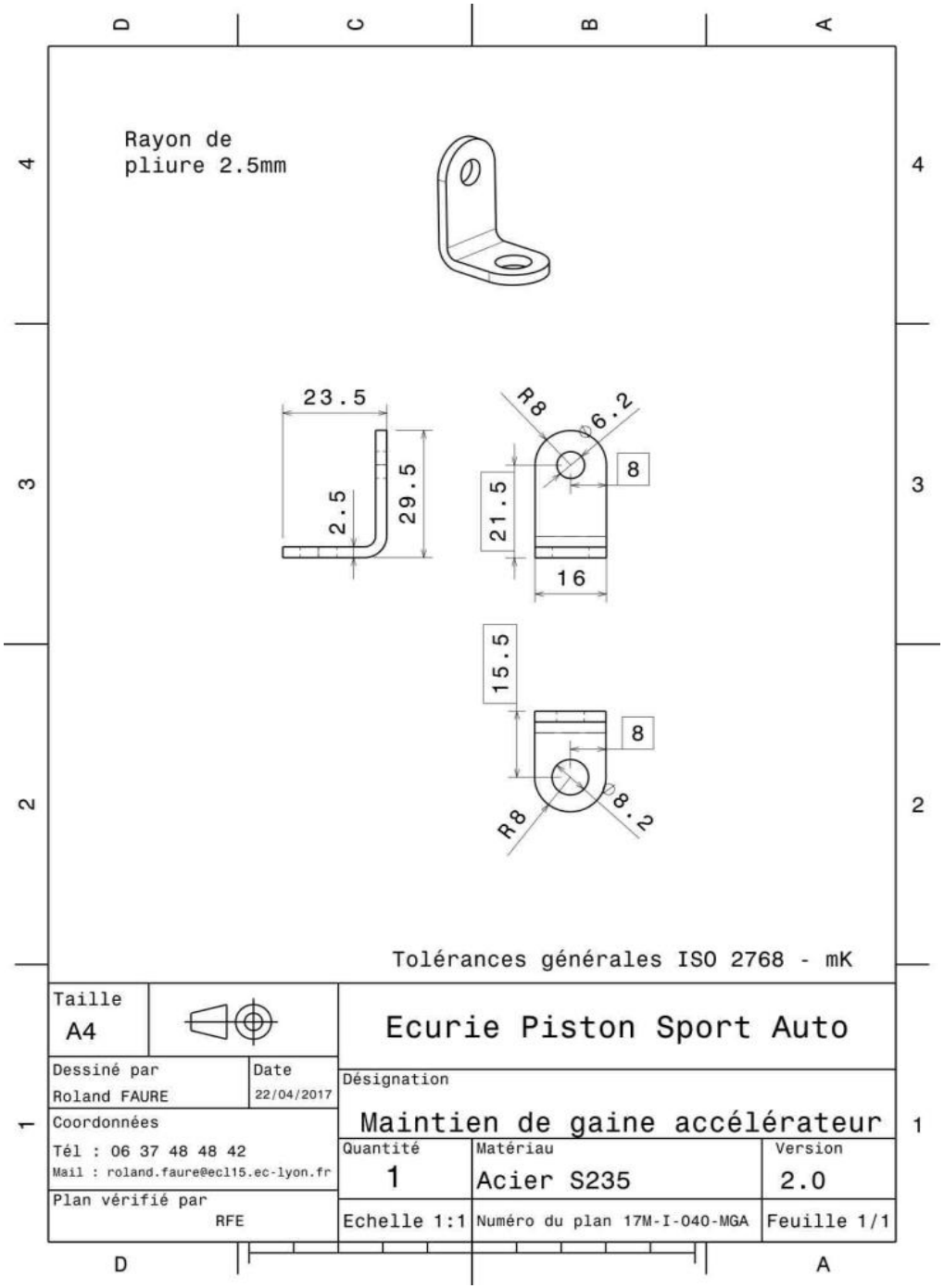
Rayon de
pliure 2.5mm
23.5
2.5
29.5
R8
⌀6.2
8
21.5
16
15.5
8
R8
⌀8.2
Tolérances générales ISO 2768 - mK
Taille
A4
Ecurie Piston Sport Auto
Dessiné par
Roland FAURE
Date
22/04/2017
Désignation
Maintien de gaine accélérateur
Coordonnées
Tél : 06 37 48 48 42
Mail : roland.faure@ecl15.ec-lyon.fr
Quantité
1
Matériau
Acier S235
Version
2.0
Plan vérifié par
RFE
Echelle 1:1
Numéro du plan 17M-I-040-MGA
Feuille 1/1

University	Ecole Centrale de Lyon		Back to BOM	**Car #**	81	**Part Cost**	$ 0.97
System	Frame & Body	Drawing :	FileLink1			**Qty**	2
Assembly	Pedal Assembly		**FileLink2**	**FileLink1**			
Part	Connecting-Rod		**FileLink3**	**FileLink2**		**Extended Cost**	$ 1.94
P/N Base	FR 03007			**FileLink3**			
Suffix	AA						
Details	Movement transmitter						

ItemOrder	Material	Use	UnitCost	Size1	Unit1	Size2	Unit2	Area Name	Area	Length	Density	Quantity	Sub Total
10	Aluminum, Normal (per kg)	Raw material	$ 4.20	0.010	kg								$ 0.04
												Sub Total	**$ 0.04**

ItemOrder	Process	Use	UnitCost	Unit	Quantity	Multiplier	Mult. Val.	Sub Total
10	Machining Setup, Install and remove		$ 1.30	unit	1	2 parts cut from a single machine setup	0.5	$ 0.65
20	Laser Cut		$ 0.01	cm	27.78			$ 0.28
							Sub Total	**$ 0.93**

FR 03007

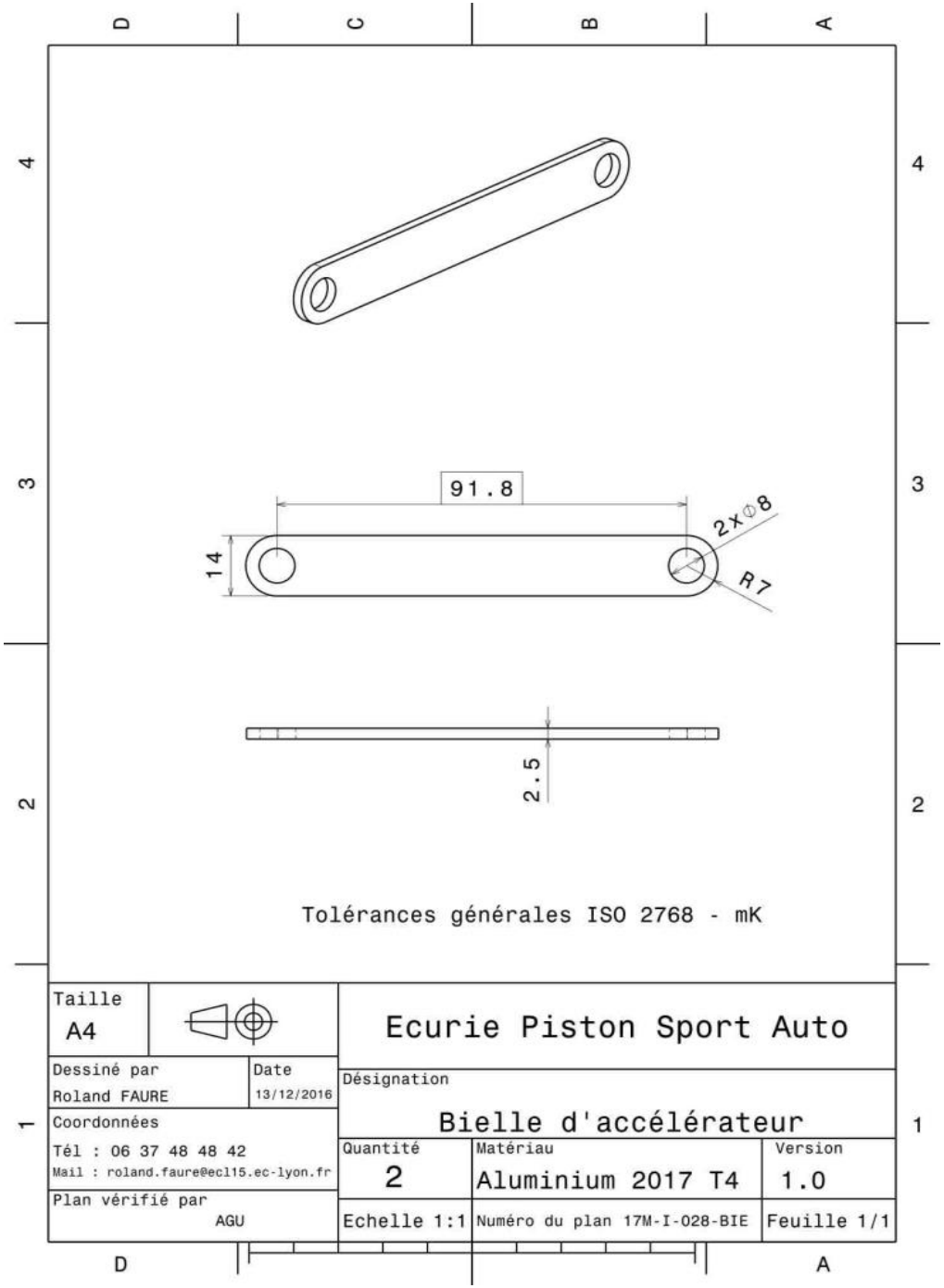
91.8
14
2x∅8
R7
2.5
Tolérances générales ISO 2768 - mK
Taille
A4
Ecurie Piston Sport Auto
Dessiné par
Roland FAURE
Date
13/12/2016
Désignation
Bielle d'accélérateur
Coordonnées
Tél : 06 37 48 48 42
Mail : roland.faure@ecl15.ec-lyon.fr
Quantité
2
Matériau
Aluminium 2017 T4
Version
1.0
Plan vérifié par
AGU
Echelle 1:1
Numéro du plan 17M-I-028-BIE
Feuille 1/1

University	Ecole Centrale de Lyon		Back to BOM	**Car #**	81	**Part Cost**	$ 2.99
System	Frame & Body	Drawing :	FileLink1			**Qty**	2
Assembly	Pedal Assembly		**FileLink2**	**FileLink1**			
Part	Foot Support		**FileLink3**	**FileLink2**		**Extended Cost**	$ 5.97
P/N Base	FR 03008			**FileLink3**			
Suffix	AA						
Details	Receiving the foot of the driver						

ItemOrder	Material	Use	UnitCost	Size1	Unit1	Size2	Unit2	Area Name	Area	Length	Density	Quantity	Sub Total
10	Aluminum, Normal (per kg)	Raw material	$ 4.20	0.103	kg								$ 0.43
												Sub Total	**$ 0.43**

ItemOrder	Process	Use	UnitCost	Unit	Quantity	Multiplier	Mult. Val.	Sub Total
10	Machining Setup, Install and remove		$ 1.30	unit	1			$ 1.30
20	Laser Cut		$ 0.01	cm	50.45			$ 0.50
30	Sheet metal bends		$ 0.25	bend	3			$ 0.75
							Sub Total	**$ 2.55**

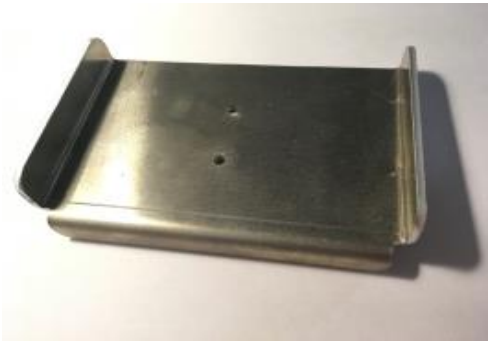

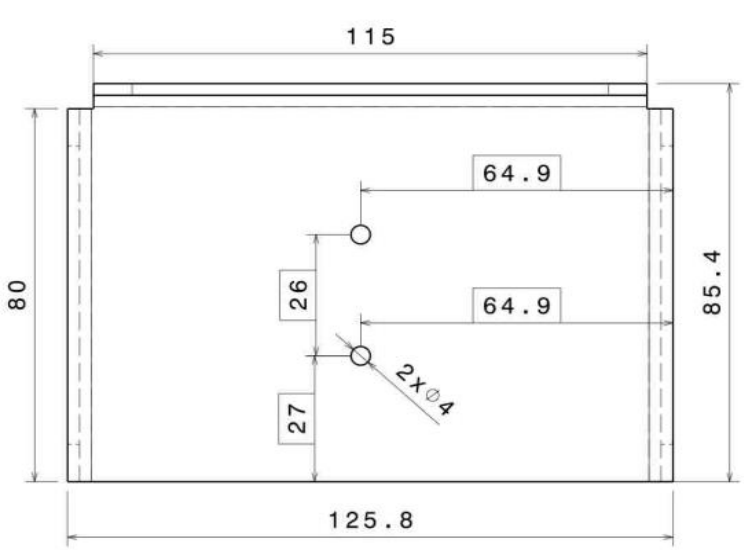

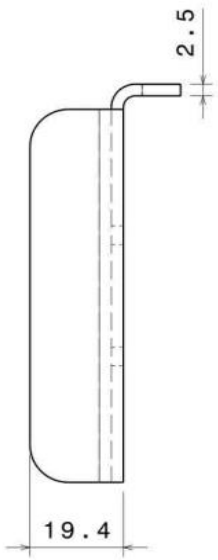

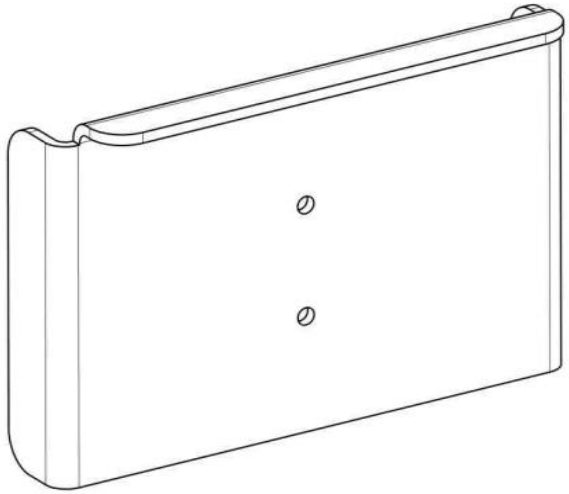

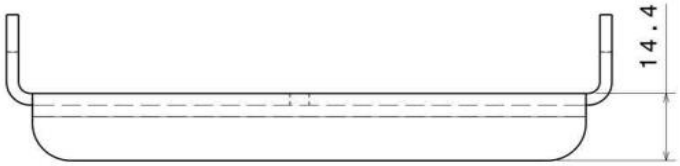

Tolérances générales ISO 2768 - mK

Rayon de congé 8 mm

Rayon de pliure 2.5 mm

Taille A3		Ecurie Piston Sport Auto
Dessiné par Roland FAURE	Date 13/12/2016	Désignation Appui de pied
Coordonnées Tél : 06 37 48 48 42 Mail : roland.faure@ecl15.ec-lyon.fr		Quantité 2 / Matériau Aluminium 2017 T4 / Version 1.0
Plan vérifié par AGU		Echelle 1:1 / Numéro du plan 17M-I-022-APP / Feuille 1/1

University	Ecole Centrale de Lyon		Back to BOM	**Car #**	81	**Part Cost**	$ 0.75
System	Frame & Body	Drawing :	FileLink1			**Qty**	4
Assembly	Pedal Assembly		**FileLink2**	**FileLink1**			
Part	Front Rails Mount		**FileLink3**	**FileLink2**		**Extended Cost**	$ 3.00
P/N Base	FR 03009			**FileLink3**			
Suffix	AA						
Details	To fix the rails to the frame						

ItemOrder	Material	Use	UnitCost	Size1	Unit1	Size2	Unit2	Area Name	Area	Length	Density	Quantity	Sub Total
10	Steel, Alloy (per kg)	Raw material	$ 2.25	0.018	kg								$ 0.04
												Sub Total	**$ 0.04**

ItemOrder	Process	Use	UnitCost	Unit	Quantity	Multiplier	Mult. Val.	Sub Total
10	Machining Setup, Install and remove		$ 1.30	unit	1	4 parts cut from a single machine setup	0.25	$ 0.33
20	Laser Cut		$ 0.01	cm	12.82	Material - Steel	3	$ 0.38
							Sub Total	**$ 0.71**

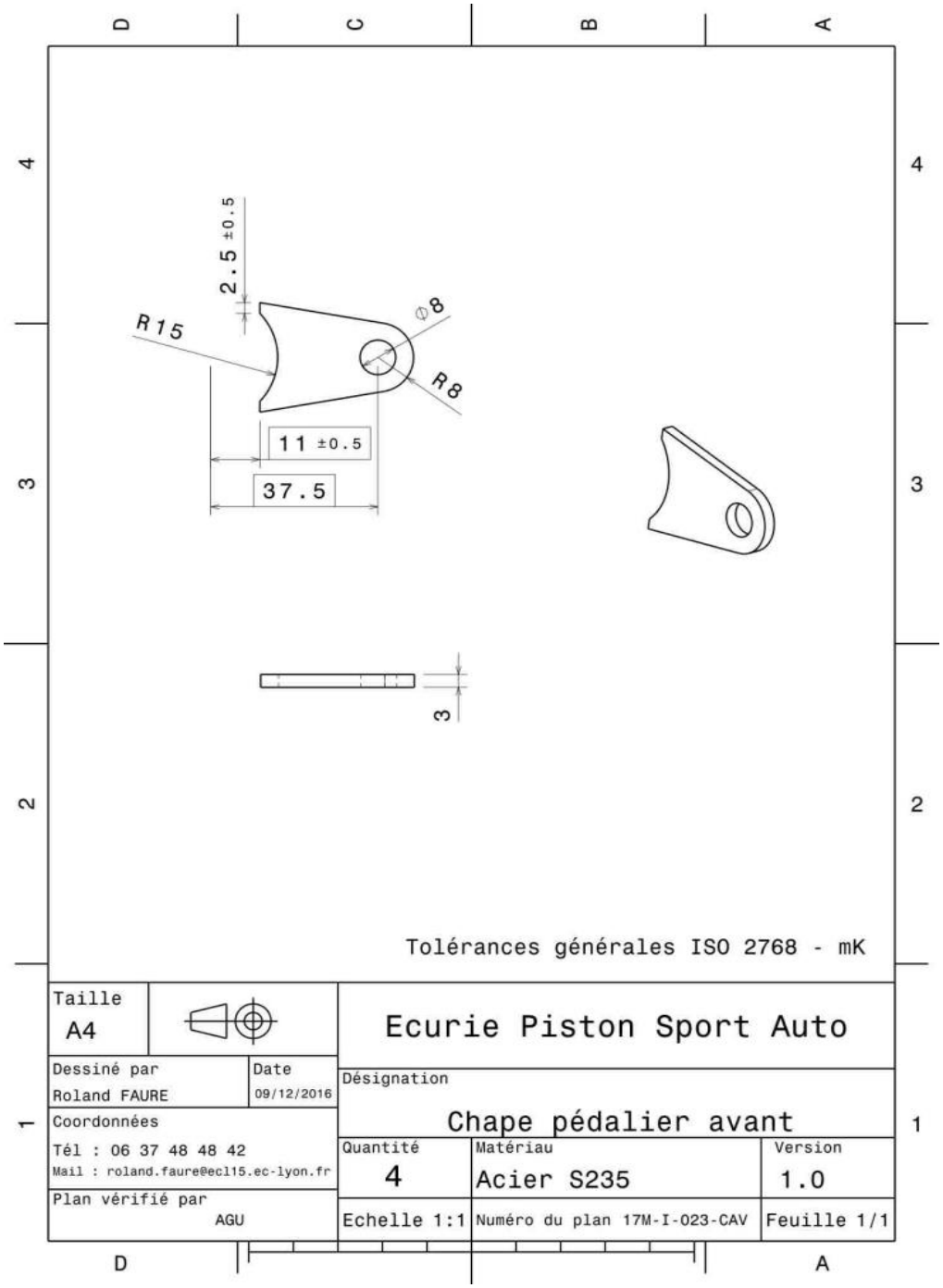
2.5 ±0.5
R15
Ø8
R8
11 ±0.5
37.5
3
Tolérances générales ISO 2768 - mK
Taille
A4
Ecurie Piston Sport Auto
Dessiné par
Roland FAURE
Date
09/12/2016
Désignation
Chape pédalier avant
Coordonnées
Tél : 06 37 48 48 42
Mail : roland.faure@ecl15.ec-lyon.fr
Quantité
4
Matériau
Acier S235
Version
1.0
Plan vérifié par
AGU
Echelle 1:1
Numéro du plan 17M-I-023-CAV
Feuille 1/1

University	Ecole Centrale de Lyon			Back to BOM	**Car #**	81	**Part Cost**	$	3.09
System	Frame & Body	Drawing :	FileLink1				**Qty**		1
Assembly	Pedal Assembly		**FileLink2**		**FileLink1**				
Part	Overtravel Switch Support		**FileLink3**		**FileLink2**		**Extended Cost**	$	3.09
P/N Base	FR 03010				**FileLink3**				
Suffix	AA								
Details	To support the overtravel switch								

ItemOrder	Material	Use	UnitCost	Size1	Unit1	Size2	Unit2	Area Name	Area	Length	Density	Quantity	Sub Total
10	Steel, Alloy (per kg)	Raw material	$ 2.25	0.067	kg								$ 0.15
												Sub Total	**$ 0.15**

ItemOrder	Process	Use	UnitCost	Unit	Quantity	Multiplier	Mult. Val.	Sub Total
10	Machining Setup, Install and remove		$ 1.30	unit	1			$ 1.30
20	Laser Cut		$ 0.01	cm	37.94	Material - Steel	3	$ 1.14
30	Sheet metal bends		$ 0.25	bend	2			$ 0.50
							Sub Total	**$ 2.94**

FR 03010

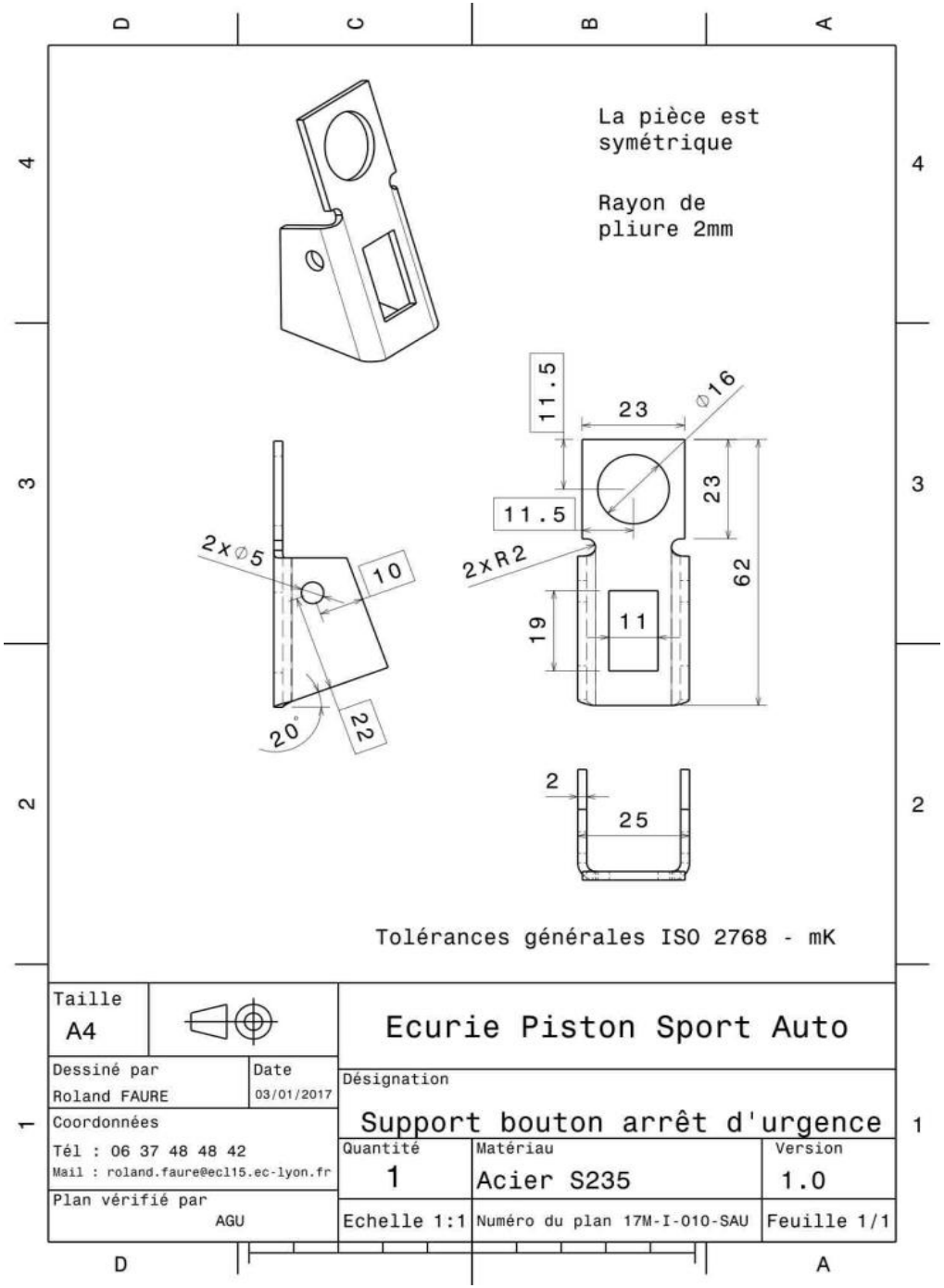
La pièce est symétrique
Rayon de pliure 2mm
11.5
23
⌀16
23
11.5
62
2xR2
2x⌀5
10
19
11
20°
22
2
25
Tolérances générales ISO 2768 - mK
Taille
A4
Ecurie Piston Sport Auto
Dessiné par
Roland FAURE
Date
03/01/2017
Désignation
Support bouton arrêt d'urgence
Coordonnées
Tél : 06 37 48 48 42
Mail : roland.faure@ecl15.ec-lyon.fr
Quantité
1
Matériau
Acier S235
Version
1.0
Plan vérifié par
AGU
Echelle 1:1
Numéro du plan 17M-I-010-SAU
Feuille 1/1

University	Ecole Centrale de Lyon		Back to BOM	**Car #**	81	**Part Cost**	$ 3.10
System	Frame & Body	Drawing :	FileLink1			**Qty**	2
Assembly	Pedal Assembly		**FileLink2**	**FileLink1**			
Part	Pedal Rail		**FileLink3**	**FileLink2**		**Extended Cost**	$ 6.19
P/N Base	FR 03011			**FileLink3**			
Suffix	AA						
Details	Rail that support the pedal assembly						

ItemOrder	Material	Use	UnitCost	Size1	Unit1	Size2	Unit2	Area Name	Area	Length	Density	Quantity	Sub Total
10	Aluminum, Normal (per kg)	Raw material	$ 4.20	0.2	kg								$ 0.84
												Sub Total	**$ 0.84**

ItemOrder	Process	Use	UnitCost	Unit	Quantity	Multiplier	Mult. Val.	Sub Total
10	Machining Setup, Install and remove		$ 1.30	unit	1			$ 1.30
20	Machining	Horizontal holes	$ 0.04	cm^3	3.82			$ 0.15
30	Machining Setup, Change		$ 0.65	unit	1			$ 0.65
40	Machining	Vertical holes	$ 0.04	cm^3	3.82			$ 0.15
							Sub Total	**$ 2.26**

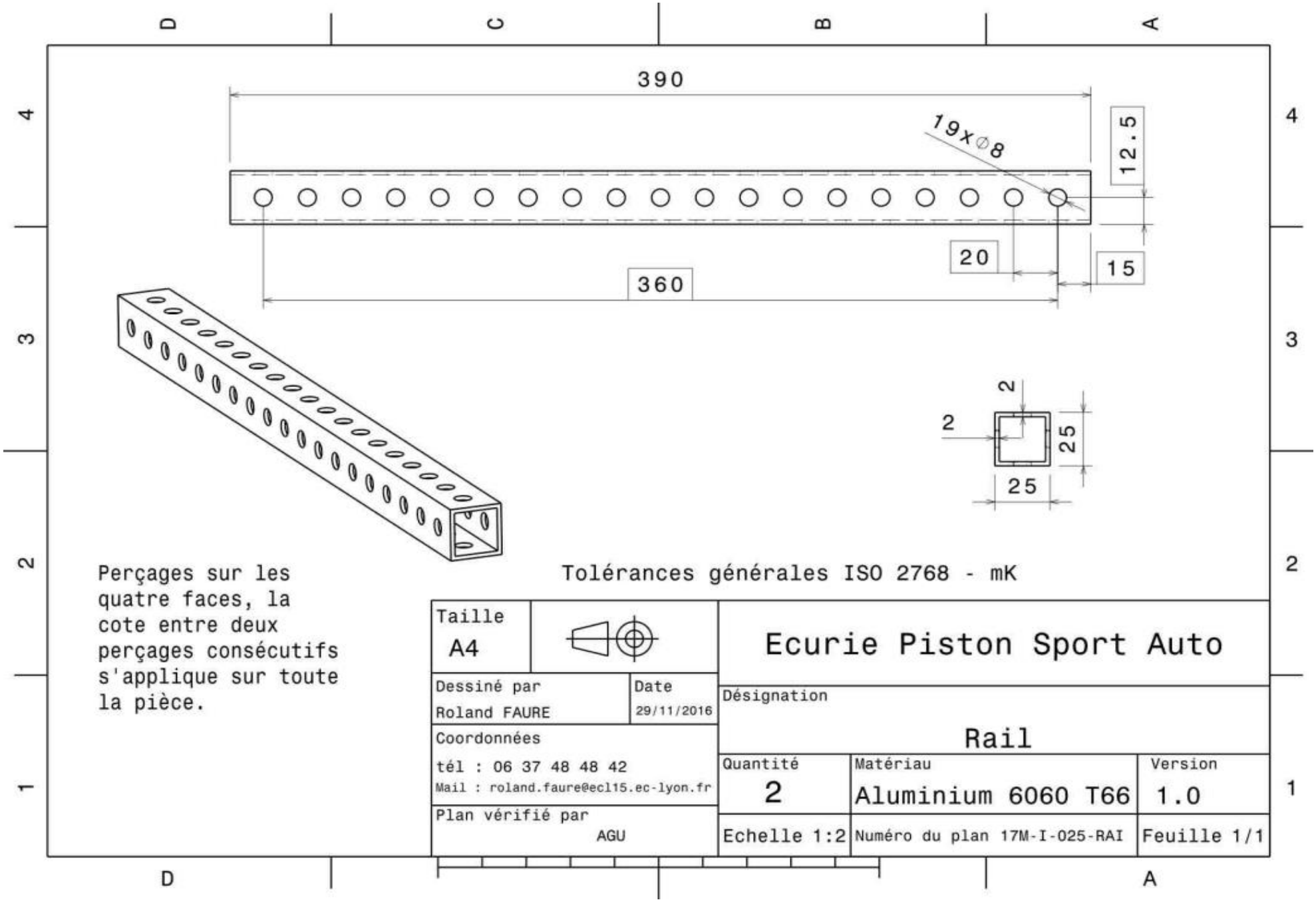
390
19x⌀8
12.5
20
15
360
2
2
25
25
Perçages sur les quatre faces, la cote entre deux perçages consécutifs s'applique sur toute la pièce.
Tolérances générales ISO 2768 - mK
Taille
A4
Ecurie Piston Sport Auto
Dessiné par
Roland FAURE
Date
29/11/2016
Désignation
Rail
Coordonnées
tél : 06 37 48 48 42
Mail : roland.faure@ecl15.ec-lyon.fr
Quantité
2
Matériau
Aluminium 6060 T66
Version
1.0
Plan vérifié par
AGU
Echelle 1:2
Numéro du plan 17M-I-025-RAI
Feuille 1/1

University	Ecole Centrale de Lyon		Back to BOM	**Car #**	81	**Part Cost**	$ 3.71
System	Frame & Body	Drawing :	FileLink1			**Qty**	1
Assembly	Pedal Assembly		**FileLink2**	**FileLink1**			
Part	Platform Foot Support		**FileLink3**	**FileLink2**		**Extended Cost**	$ 3.71
P/N Base	FR 03012			**FileLink3**			
Suffix	AA						
Details	To maintain the heel of the feet						

ItemOrder	Material	Use	UnitCost	Size1	Unit1	Size2	Unit2	Area Name	Area	Length	Density	Quantity	Sub Total
10	Aluminum, Normal (per kg)	Raw material	$ 4.20	0.222	kg								$ 0.93
												Sub Total	**$ 0.93**

ItemOrder	Process	Use	UnitCost	Unit	Quantity	Multiplier	Mult. Val.	Sub Total
10	Machining Setup, Install and remove		$ 1.30	unit	1			$ 1.30
20	Laser Cut		$ 0.01	cm	98.04			$ 0.98
30	Sheet metal bends		$ 0.25	bend	2			$ 0.50
							Sub Total	**$ 2.78**

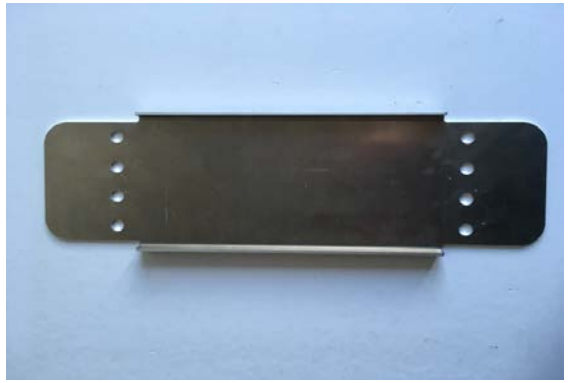

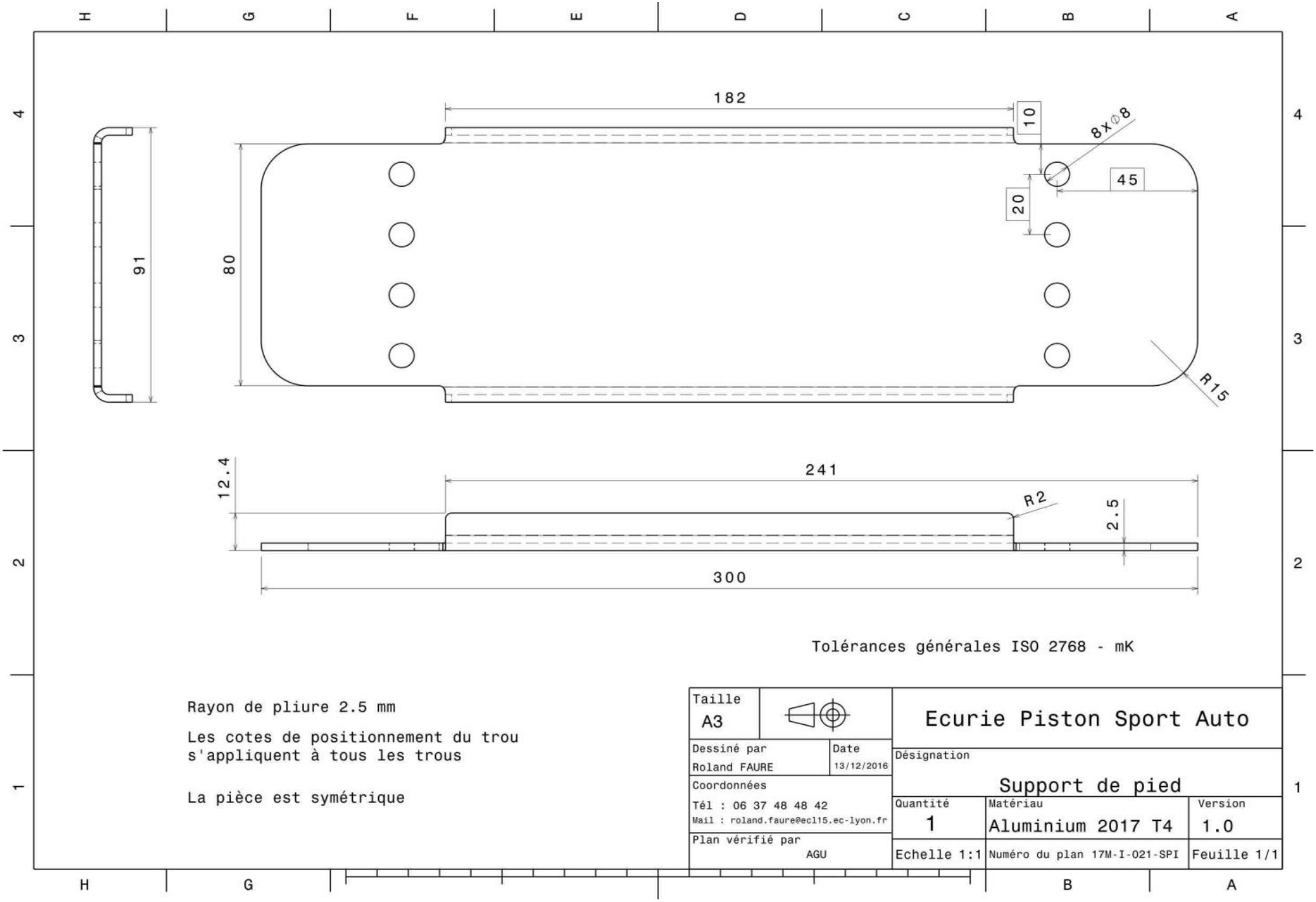
182
10
8x⌀8
45
20
91
80
R15
12.4
241
R2
2.5
300
Tolérances générales ISO 2768 - mK
Rayon de pliure 2.5 mm
Les cotes de positionnement du trou s'appliquent à tous les trous
La pièce est symétrique
Taille
A3
Dessiné par
Roland FAURE
Date
13/12/2016
Coordonnées
Tél : 06 37 48 48 42
Mail : roland.faure@ecl15.ec-lyon.fr
Plan vérifié par
AGU
Ecurie Piston Sport Auto
Désignation
Support de pied
Quantité
1
Matériau
Aluminium 2017 T4
Version
1.0
Echelle 1:1
Numéro du plan 17M-I-021-SPI
Feuille 1/1

University	Ecole Centrale de Lyon		Back to BOM	**Car #**	81	**Part Cost**	$ 0.75
System	Frame & Body	Drawing :	FileLink1			**Qty**	4
Assembly	Pedal Assembly		**FileLink2**	**FileLink1**			
Part	Rear Rails Mount		**FileLink3**	**FileLink2**		**Extended Cost**	$ 2.99
P/N Base	FR 03013			**FileLink3**			
Suffix	AA						
Details	To fix the rails to the frame						

ItemOrder	Material	Use	UnitCost	Size1	Unit1	Size2	Unit2	Area Name	Area	Length	Density	Quantity	Sub Total
10	Steel, Alloy (per kg)	Raw material	$ 2.25	0.018	kg								$ 0.04
												Sub Total	**$ 0.04**

ItemOrder	Process	Use	UnitCost	Unit	Quantity	Multiplier	Mult. Val.	Sub Total
10	Machining Setup, Install and remove		$ 1.30	unit	1	4 parts cut from a single machine setup	0.25	$ 0.33
20	Laser Cut		$ 0.01	cm	12.73	Material - Steel	3	$ 0.38
							Sub Total	**$ 0.71**

FR 03013

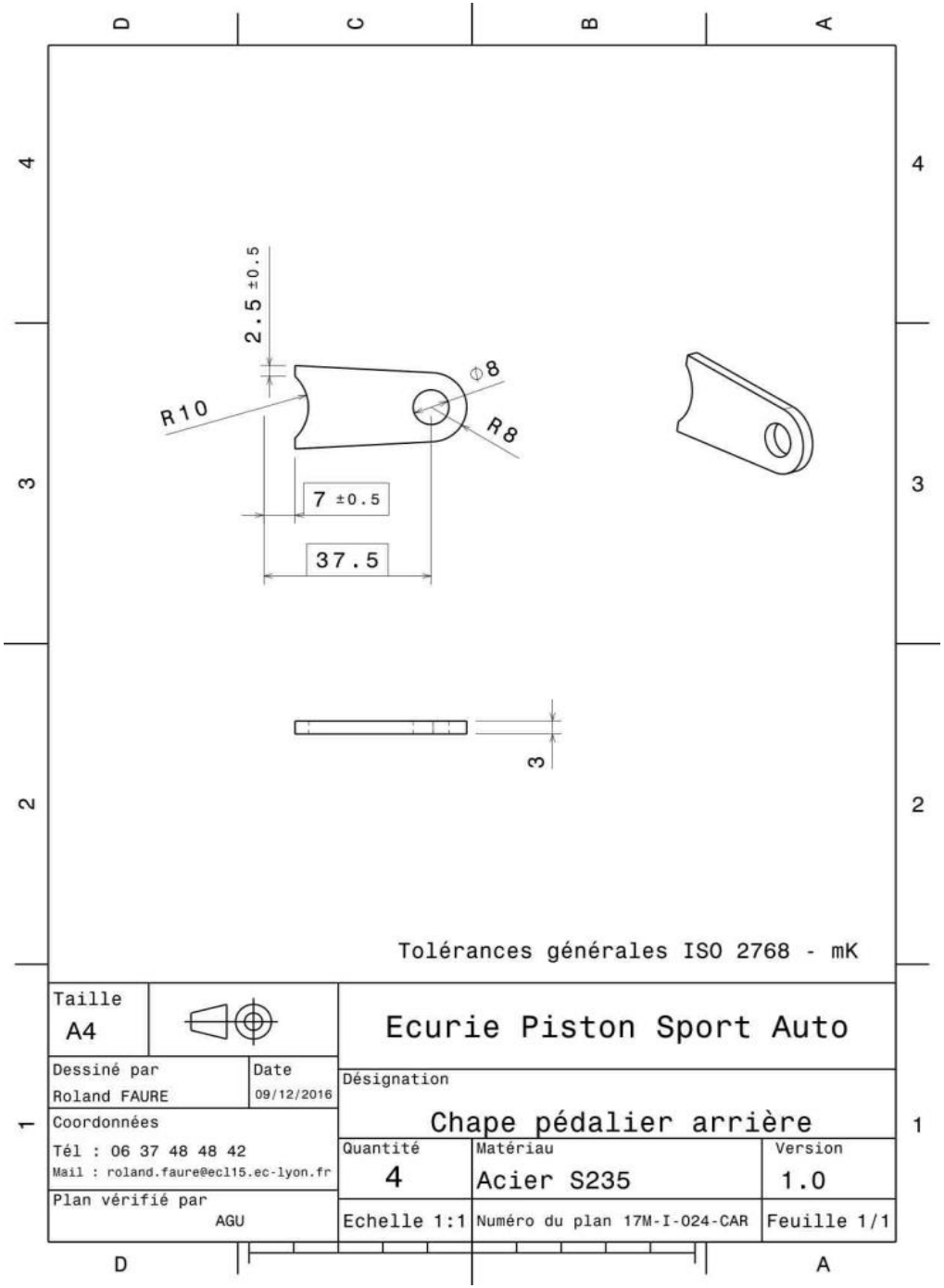
2.5 ±0.5
R10
Φ8
R8
7 ±0.5
37.5
3
Tolérances générales ISO 2768 - mK
Taille
A4
Ecurie Piston Sport Auto
Dessiné par
Roland FAURE
Date
09/12/2016
Désignation
Chape pédalier arrière
Coordonnées
Tél : 06 37 48 48 42
Mail : roland.faure@ecl15.ec-lyon.fr
Quantité
4
Matériau
Acier S235
Version
1.0
Plan vérifié par
AGU
Echelle 1:1
Numéro du plan 17M-I-024-CAR
Feuille 1/1

University	Ecole Centrale de Lyon		Back to BOM	**Car #**	81	**Part Cost**	$ 8.15
System	Frame & Body	Drawing :	FileLink1			**Qty**	1
Assembly	Pedal Assembly		**FileLink2**	**FileLink1**			
Part	Throttle Pedal		**FileLink3**	**FileLink2**		**Extended Cost**	$ 8.15
P/N Base	FR 03014			**FileLink3**			
Suffix	AA						
Details	Branch of the throttle pedal						

ItemOrder	Material	Use	UnitCost	Size1	Unit1	Size2	Unit2	Area Name	Area	Length	Density	Quantity	Sub Total
10	Aluminum, Normal (per kg)	Raw material	$ 4.20	0.285	kg								$ 1.20
												Sub Total	**$ 1.20**

ItemOrder	Process	Use	UnitCost	Unit	Quantity	Multiplier	Mult. Val.	Sub Total
10	Machining Setup, Install and remove		$ 1.30	unit	1			$ 1.30
20	Machining		$ 0.04	cm^3	50.82		1	$ 2.03
30	Machining Setup, Change		$ 0.65	unit	1			$ 0.65
40	Machining		$ 0.04	cm^3	44.27		1	$ 1.77
50	Machining Setup, Change		$ 0.65	unit	1			$ 0.65
60	Machining		$ 0.04	cm^3	13.62		1	$ 0.54
							Sub Total	**$ 6.95**

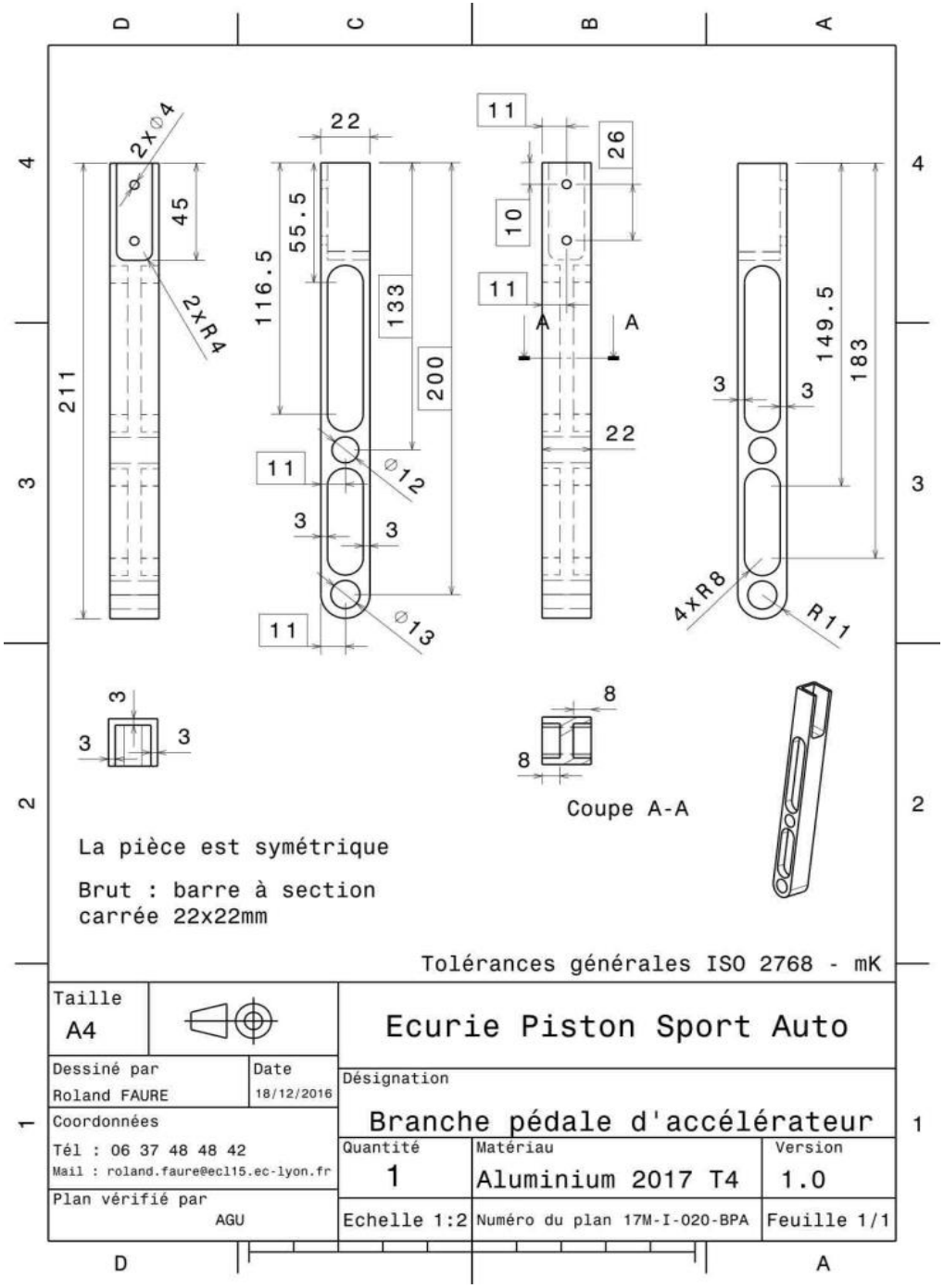
2x⌀4
45
2xR4
211
22
116.5
55.5
133
200
11
⌀12
3
3
11
⌀13
11
26
10
11
A
A
22
3
3
149.5
183
4xR8
R11
3
3
3
8
8
Coupe A-A
La pièce est symétrique
Brut : barre à section carrée 22x22mm
Tolérances générales ISO 2768 - mK
Taille
A4
Ecurie Piston Sport Auto
Dessiné par
Roland FAURE
Date
18/12/2016
Désignation
Branche pédale d'accélérateur
Coordonnées
Tél : 06 37 48 48 42
Mail : roland.faure@ecl15.ec-lyon.fr
Quantité
1
Matériau
Aluminium 2017 T4
Version
1.0
Plan vérifié par
AGU
Echelle 1:2
Numéro du plan 17M-I-020-BPA
Feuille 1/1

University	Ecole Centrale de Lyon		Back to BOM	**Car #**	81	**Part Cost**	$ 1.97
System	Frame & Body	Drawing :	FileLink1			**Qty**	1
Assembly	Pedal Assembly		**FileLink2**	**FileLink1**			
Part	Throttle Pedal Abutment		**FileLink3**	**FileLink2**		**Extended Cost**	$ 1.97
P/N Base	FR 03015			**FileLink3**			
Suffix	AA						
Details	Abutment for the pedal travel						

ItemOrder	Material	Use	UnitCost	Size1	Unit1	Size2	Unit2	Area Name	Area	Length	Density	Quantity	Sub Total
10	Aluminum, Normal (per kg)	Raw material	$ 4.20	0.008	kg								$ 0.03
												Sub Total	**$ 0.03**

ItemOrder	Process	Use	UnitCost	Unit	Quantity	Multiplier	Mult. Val.	Sub Total
10	Machining Setup, Install and remove		$ 1.30	unit	1			$ 1.30
20	Laser Cut		$ 0.01	cm	13.8			$ 0.14
30	Sheet metal bends		$ 0.25	bend	2			$ 0.50
							Sub Total	**$ 1.94**

FR 03015

Rayon de congé 3.5mm

Rayon de pliure 2.5mm

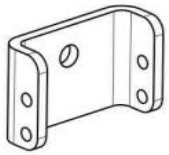

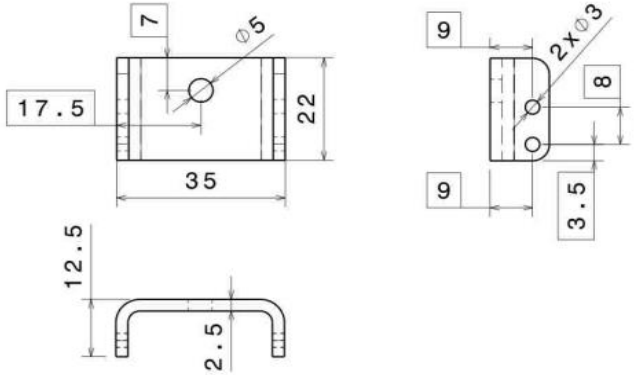

Tolérances générales ISO 2768 - mK

Taille A4		Ecurie Piston Sport Auto
Dessiné par Roland FAURE	Date 03/01/2017	Désignation: Butée d'accélérateur
Coordonnées Tél : 06 37 48 48 42 Mail : roland.faure@ecl15.ec-lyon.fr		Quantité: 1 / Matériau: Aluminium 2017 T4 / Version: 1.0
Plan vérifié par AGU		Echelle 1:1 / Numéro du plan 17M-I-013-BAC / Feuille 1/1

University	Ecole Centrale de Lyon		Back to BOM	**Car #**	81	**Part Cost**	$ 2.00
System	Frame & Body	Drawing :	FileLink1			**Qty**	1
Assembly	Pedal Assembly		**FileLink2**	**FileLink1**			
Part	Throttle Pedal Axis Cable		**FileLink3**	**FileLink2**		**Extended Cost**	$ 2.00
P/N Base	FR 03016			**FileLink3**			
Suffix	AA						
Details	To maintain the throttle cable						

ItemOrder	Material	Use	UnitCost	Size1	Unit1	Size2	Unit2	Area Name	Area	Length	Density	Quantity	Sub Total
10	Aluminum, Normal (per kg)	Raw material	$ 4.20	0.007	kg								$ 0.03
												Sub Total	**$ 0.03**

ItemOrder	Process	Use	UnitCost	Unit	Quantity	Multiplier	Mult. Val.	Sub Total
10	Machining Setup, Install and remove		$ 1.30	unit	1		1	$ 1.30
20	Machining		$ 0.04	cm^3	0.25		1	$ 0.01
30	Machining Setup, Change		$ 0.65	unit	1		1	$ 0.65
40	Machining		$ 0.04	cm^3	0.35		1	$ 0.01
							Sub Total	**$ 1.97**

FR 03016

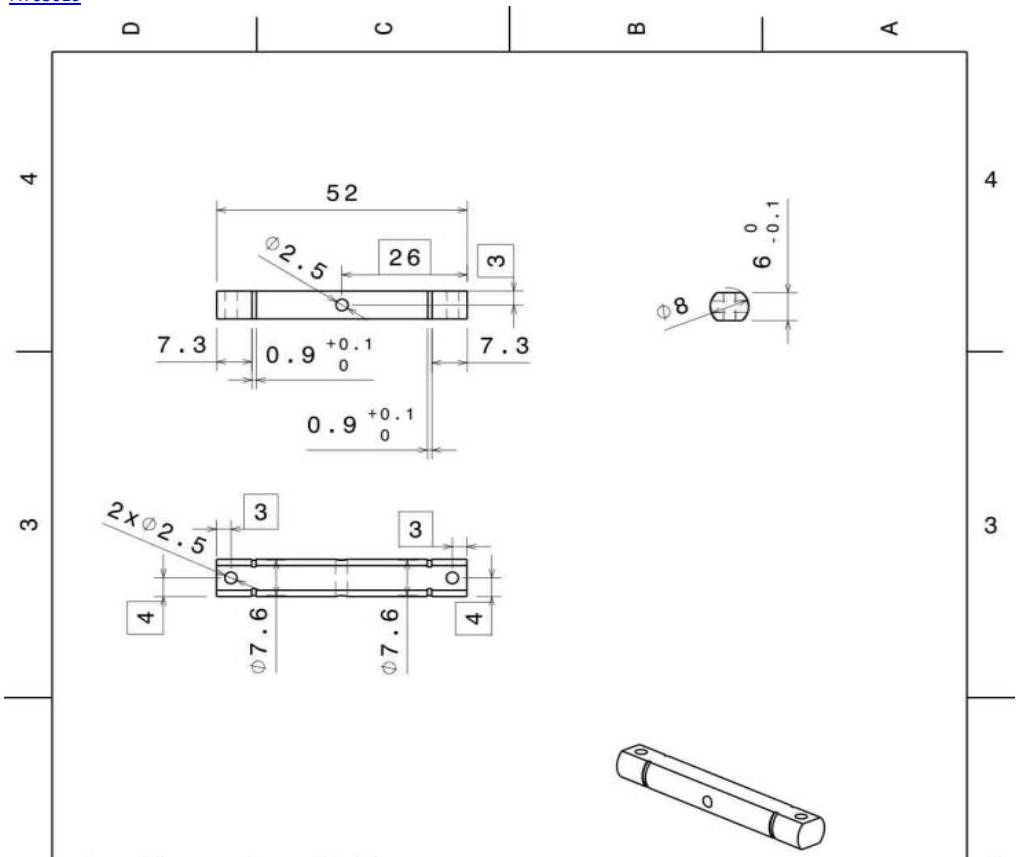

La pièce est symétrique

Brut : barre cylindrique
de diamètre 8mm

Tolérances générales ISO 2768 - mK

Taille A4		Ecurie Piston Sport Auto
Dessiné par Roland FAURE	Date 20/12/2016	Désignation Axe câble d'accélérateur
Coordonnées Tél : 06 37 48 48 42 Mail : roland.faure@ecl15.ec-lyon.fr		Quantité 1 / Matériau Aluminium 2017 T4 / Version 1.0
Plan vérifié par AGU		Echelle 1:1 / Numéro du plan 17M-I-018-ACA / Feuille 1/1

University	Ecole Centrale de Lyon			Back to BOM	**Car #**	81	**Part Cost**	$	4.11
System	Frame & Body	Drawing :	FileLink1				**Qty**		2
Assembly	Pedal Assembly		**FileLink2**		**FileLink1**				
Part	Throttle Pedal Support		**FileLink3**		**FileLink2**		**Extended Cost**	$	8.22
P/N Base	FR 03017				**FileLink3**				
Suffix	AA								
Details	Fixing the branch to the rails								

ItemOrder	Material	Use	UnitCost	Size1	Unit1	Size2	Unit2	Area Name	Area	Length	Density	Quantity	Sub Total
10	Steel, Alloy (per kg)	Raw material	$ 2.25	0.124	kg								$ 0.28
												Sub Total	**$ 0.28**

ItemOrder	Process	Use	UnitCost	Unit	Quantity	Multiplier	Mult. Val.	Sub Total
10	Machining Setup, Install and remove		$ 1.30	unit	1			$ 1.30
20	Laser Cut		$ 0.01	cm	76	Material - Steel	3	$ 2.28
30	Sheet metal bends		$ 0.25	bend	1			$ 0.25
							Sub Total	**$ 3.83**

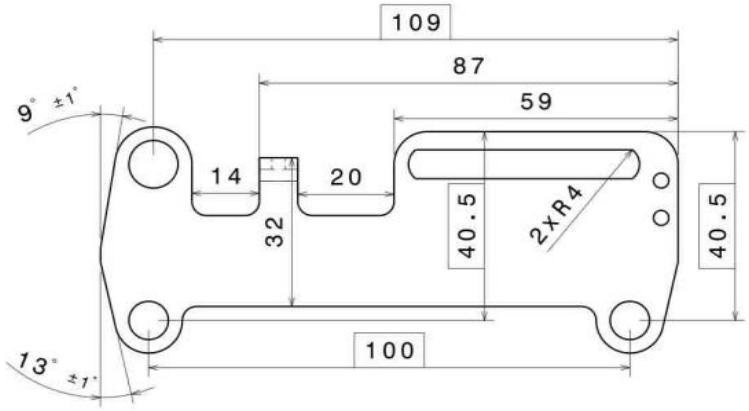

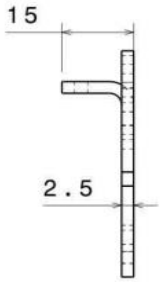

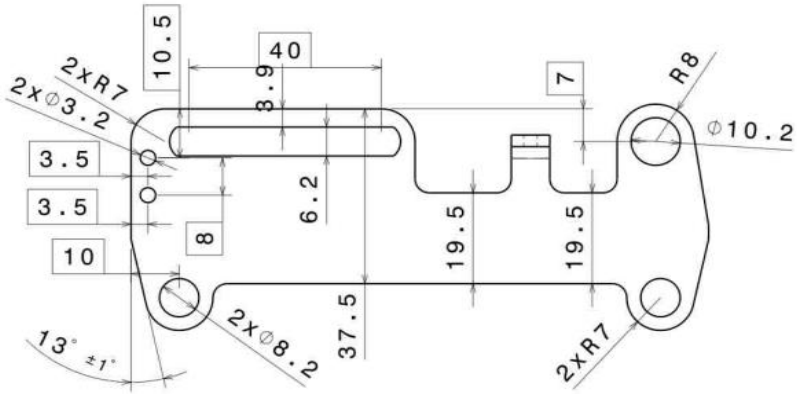

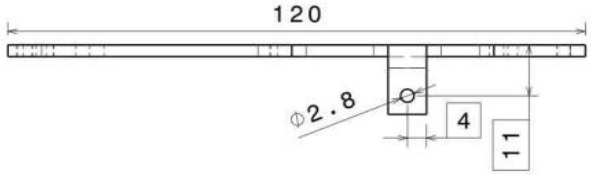

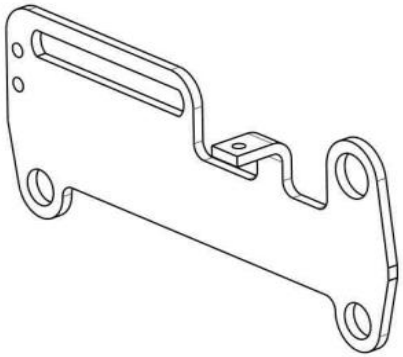

Tolérances générales ISO 2768 - mK

Rayon de congé 3mm

Rayon de pliure 2.5mm

Taille A3		Ecurie Piston Sport Auto
Dessiné par Roland FAURE	Date 22/04/2017	Désignation Support pédale d'accélérateur
Coordonnées Tél : 06 37 48 48 42 Mail : roland.faure@ecl15.ec-lyon.fr		Quantité 1+1 / Matériau Acier S235 / Version 2.0
Plan vérifié par RFE		Echelle 1:1 / Numéro du plan 17M-I-012-SPA / Feuille 1/1

University	Ecole Centrale de Lyon	Back to BOM	**Car #**	81	**Asm Cost** $ 802.55
System	Frame & Body				**Qty** 1
Assembly	Undertray		**FileLink1**		
P/N Base	FR A0004		**FileLink2**		**Extended Cost** $ 802.55
Suffix	AA		**FileLink3**		
Details	Undertray and its attachments				

ItemOrder	Part	Part Cost	Quantity	Sub Total
10	Front Undertray	$ 121.37	1	$ 121.37
20	Middle Undertray	$ 95.39	1	$ 95.39
30	Rear Undertray	$ 544.70	1	$ 544.70
40	Simple Pan Mounts	$ 0.92	4	$ 3.66
50	Double Pan Mounts	$ 2.21	7	$ 15.50
			Sub Total	**$ 780.62**

ItemOrder	Material	Use	UnitCost	Size1	Unit1	Size2	Unit2	Area Name	Area	Length	Density	Quantity	Sub Total
10	Paint	Painting mounts	$ 10.00	0.012	m^2							0.012	$ 0.12
												Sub Total	**$ 0.12**

ItemOrder	Process	Use	UnitCost	Unit	Quantity	Multiplier	Mult. Val.	Sub Total
10	Weld	Weld Undertray mounts to frame	$ 0.15	cm	18		1	$ 2.70
20	Aerosol apply	Painting mounts	$ 5.25	m^2	0.012		1	$ 0.06
30	Assemble, 1 kg, Line-on-Line	Front Undertray on the frame	$ 0.13	unit	1	Assemble - Length > 0.5m	1.25	$ 0.16
40	Screwdriver > 1 Turn	M4 bolts for front Undertray fixing	$ 0.50	unit	1	Repeat 4	4	$ 2.00
50	Reaction Tool <= 6.35 mm	Hold nuts while fixing front Undertray	$ 0.25	unit	1	Repeat 4	4	$ 1.00
60	Assemble, 1 kg, Line-on-Line	Middle Undertray on the frame	$ 0.13	unit	1	Assemble - Length > 0.5m	1.25	$ 0.16
70	Screwdriver > 1 Turn	M4 bolts for Middle Undertray fixing	$ 0.50	unit	1	Repeat 4	4	$ 2.00
80	Reaction Tool <= 6.35 mm	Hold nuts while fixing Middle Undertray	$ 0.25	unit	1	Repeat 4	4	$ 1.00
90	Assemble, 3 kg, Line-on-Line	Rear Undertray on the frame	$ 0.38	unit	1	Assemble - Length > 0.5m	1.25	$ 0.48
100	Screwdriver > 1 Turn	M4 bolts for Rear Undertray fixing	$ 0.50	unit	1	Repeat 10	10	$ 5.00
110	Reaction Tool <= 6.35 mm	Hold nuts while fixing Rear Undertray	$ 0.25	unit	1	Repeat 10	10	$ 2.50
							Sub Total	**$ 17.06**

ItemOrder	Fastener	Use	UnitCost	Size1	Unit1	Size2	Unit2	Quantity	Sub Total
10	Bolt, Grade 8.8 (SAE 5)	Fix the three parts of the pan, and the attachments	$ 0.02	4	mm	20	mm	18	$ 0.36
20	Washer, Grade 8.8 (SAE 5)	two washers for each bolt	$ 0.01	1	unit			36	$ 0.36
30	Nut, Grade 8.8 (SAE 5)	Lock-Nuts for each bolt	$ 0.02	4	mm			18	$ 0.36
								Sub Total	**$ 1.08**

ItemOrder	Tooling	Use	UnitCost	Unit	Quantity	PVF	FractionIncluded	Sub Total
10	Welds - Welding Fixture	Weld Undertray mounts to frame	$ 500.00	point	22	3000	1	$ 3.67
							Sub Total	**$ 3.67**

University	Ecole Centrale de Lyon		Back to BOM	**Car #**	81	**Part Cost**	$ 121.37
System	Frame & Body	**FileLink1**				**Qty**	1
Assembly	Undertray	**FileLink2**		**FileLink1**			
Part	Front Undertray	**FileLink3**		**FileLink2**		**Extended Cost**	$ 121.37
P/N Base	FR 04001			**FileLink3**			
Suffix	AA						
Details	First part of the Undertray						

ItemOrder	Material	Use	UnitCost	Size1	Unit1	Size2	Unit2	Area Name	Area	Length	Density	Quantity	Sub Total
10	Carbon Fiber, 1 Ply	Composite	$ 200.00	0.049	kg				0.148			4	$ 39.07
20	Structural Foam	Composite	$ 125.00	0.083	kg				0.148			1	$ 10.36
												Sub Total	**$ 49.43**

ItemOrder	Process	Use	UnitCost	Unit	Quantity	Multiplier	Mult. Val.	Sub Total
10	Cut (scissors, knife)	Cutting of the 4 plys	$ 0.06	cm	155	Repeat 4	4	$ 37.20
20	Lamination, Manual	Lamination of the plys and	$ 35.00	m²	0.148	Repeat 5	5	$ 25.90
30	Resin application, Infusion	Resin application on the 4	$ 2.50	m²	0.148	Repeat 4	4	$ 1.48
40	Vacuum Form		$ 10.00	m²	0.148			$ 1.48
50	Cure, Room Temperature		$ 10.00	m²	0.148			$ 1.48
60	Machining Setup, Install and	Setup for machining	$ 1.30	Unit	1			$ 1.30
70	Waterjet Cut	Cutting the outer profil	$ 0.01	cm	155			$ 1.55
80	Drilled holes < 25.4 mm dia.	Holes for fixation	$ 0.35	Unit	4			$ 1.40
							Sub Total	**$ 71.79**

ItemOrder	Tooling	Use	UnitCost	Unit	Quantity	PVF	FracIncld	Sub Total
10	Lamination - Flat Panel Tool	Mold for all plates	$ 1,500.00	m²	0.3	3000	1	$ 0.15
							Sub Total	**$ 0.15**

University	Ecole Centrale de Lyon		Back to BOM	**Car #**	81	**Part Cost**	$ 95.39
System	Frame & Body	**FileLink1**				**Qty**	1
Assembly	Undertray	**FileLink2**		**FileLink1**			
Part	Middle Undertray	**FileLink3**		**FileLink2**		**Extended Cost**	$ 95.39
P/N Base	FR 04002			**FileLink3**			
Suffix	AA						
Details	Middle part of the Undertray						

ItemOrder	Material	Use	UnitCost	Size1	Unit1	Size2	Unit2	Area Name	Area	Length	Density	Quantity	Sub Total
10	Carbon Fiber, 1 Ply	Composite	$ 200.00	0.036	kg				0.11			4	$ 29.04
20	Structural Foam	Composite	$ 125.00	0.062	kg				0.11			1	$ 7.70
												Sub Total	**$ 36.74**

ItemOrder	Process	Use	UnitCost	Unit	Quantity	Multiplier	Mult. Val.	Sub Total
10	Cut (scissors, knife)	Cutting of the 4 plys	$ 0.06	cm	133	Repeat 4	4	$ 31.92
20	Lamination, Manual	Lamination of the plys and the	$ 35.00	m²	0.11	Repeat 5	5	$ 19.25
30	Resin application, Infusion	Resin application on the 4	$ 2.50	m²	0.11	Repeat 4	4	$ 1.10
40	Vacuum Form		$ 10.00	m²	0.11			$ 1.10
50	Cure, Room Temperature		$ 10.00	m²	0.11			$ 1.10
60	Machining Setup, Install and	Setup for machining	$ 1.30	Unit	1			$ 1.30
70	Waterjet Cut	Cutting the outer profil	$ 0.01	cm	133			$ 1.33
80	Drilled holes < 25.4 mm dia.	Holes for fixation	$ 0.35	Unit	4			$ 1.40
							Sub Total	**$ 58.50**

ItemOrder	Tooling	Use	UnitCost	Unit	Quantity	PVF	FracIncld	Sub Total
10	Lamination - Flat Panel Tool	Mold for all plates	$ 1,500.00	m²	0.3	3000	1	$ 0.15
							Sub Total	**$ 0.15**

University	Ecole Centrale de Lyon		Back to BOM	**Car #**	81	**Part Cost**	$ 544.70
System	Frame & Body	Drawing :	FileLink1			**Qty**	1
Assembly	Undertray		**FileLink2**	**FileLink1**			
Part	Rear Undertray		**FileLink3**	**FileLink2**		**Extended Cost**	$ 544.70
P/N Base	FR 04003			**FileLink3**			
Suffix	AA						
Details	Rear part of the Undertray						

ItemOrder	Material	Use	UnitCost	Size1	Unit1	Size2	Unit2	Area Name	Area	Length	Density	Quantity	Sub Total
10	Carbon Fiber, 1 Ply	Composite	$ 200.00	0.272	kg				0.823			4	$ 217.27
20	Structural Foam	Composite	$ 125.00	0.461	kg				0.823			1	$ 57.61
												Sub Total	**$ 274.88**

ItemOrder	Process	Use	UnitCost	Unit	Quantity	Multiplier	Mult. Val.	Sub Total
10	Cut (scissors, knife)	Cutting of the 4 plys	$ 0.06	cm	393	Repeat 4	4	$ 94.32
20	Lamination, Manual	Lamination of the plys and	$ 35.00	m²	0.823	Repeat 5	5	$ 144.03
30	Resin application, Infusion	Resin application on the 4	$ 2.50	m²	0.823	Repeat 4	4	$ 8.23
40	Vacuum Form		$ 10.00	m²	0.823			$ 8.23
50	Cure, Room Temperature		$ 10.00	m²	0.823			$ 8.23
60	Machining Setup, Install and	Setup for machining	$ 1.30	Unit	1			$ 1.30
70	Waterjet Cut	Cutting the outer profil	$ 0.01	cm	393			$ 3.93
80	Drilled holes < 25.4 mm dia.	Holes for fixation	$ 0.35	Unit	4			$ 1.40
							Sub Total	**$ 269.67**

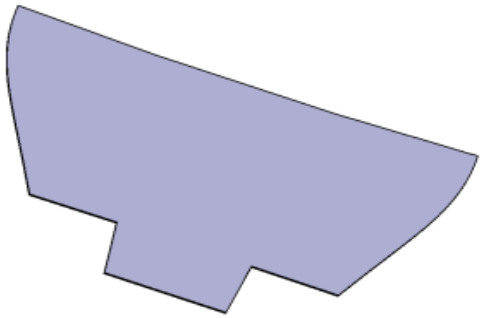

ItemOrder	Tooling	Use	UnitCost	Unit	Quantity	PVF	FracIncld	Sub Total
10	Lamination - Flat Panel Tool	Mold for all plates	$ 1,500.00	m²	0.3	3000	1	$ 0.15
							Sub Total	**$ 0.15**

Epaisseur 5mm

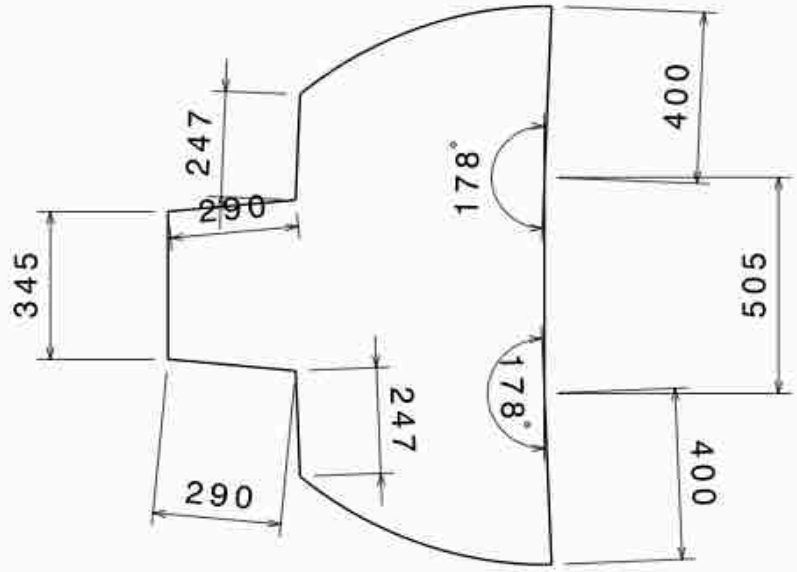

Vue de face
Echelle : 1:15

Taille A4		Ecurie Piston Sport Auto	
Dessiné par Valentin Vie	Date 09/02/2017	Désignation Plaque fond plat ouie	
Coordonnées valentin.vie@ecl15.ec-lyon.fr 0634280445		Quantité 1	Matériau Carbon sandwich	Version V1.0
Plan vérifié par WPE		Echelle1:15	No du plan fp3	Feuille 1/1

University	Ecole Centrale de Lyon		Back to BOM	**Car #**	81	**Part Cost**	$ 0.92
System	Frame & Body	Drawing :	FileLink1			**Qty**	4
Assembly	Undertray	**FileLink2**		**FileLink1**			
Part	Simple Pan Mounts	**FileLink3**		**FileLink2**		**Extended Cost**	$ 3.66
P/N Base	FR 04004			**FileLink3**			
Suffix	AA						
Details	Undertray Mounts with one attach						

ItemOrder	Material	Use	UnitCost	Size1	Unit1	Size2	Unit2	Area Name	Area	Length	Density	Quantity	Sub Total
10	Steel, Mild	Tab 2_25	$ 2.25	0.005	kg			Rectangular area	4.20E-04	1.50E-03	7850	1	$ 0.01
												Sub Total	**$ 0.01**

ItemOrder	Process	Use	UnitCost	Unit	Quantity	Multiplier	Mult. Val.	Sub Total
10	Machining Setup, Install and remove	Setup for laser cut	$ 1.30	Unit	1	4 parts cut from a single machine setup	0.25	$ 0.33
20	Laser Cut	Laser cut of the tab	$ 0.01	cm	11	Material - Steel	3	$ 0.33
30	Sheet metal bends	Tab bending	$ 0.25	bend	1			$ 0.25
							Sub Total	**$ 0.91**

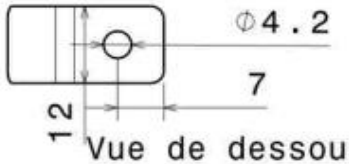

Vue de dessous
Echelle : 1:1

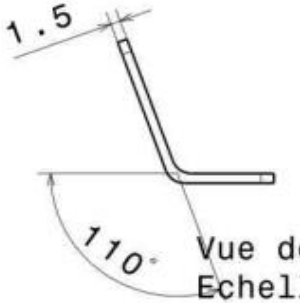

Vue de face
Echelle : 1:1

Rayon de pliure libre

Tolérances générales : ISO 2768mK

Vue isométrique
Echelle : 1:1

Taille A4		Ecurie Piston Sport Auto
Dessiné par William PIERRÉ	Date 08/12/2016	Désignation Chape fond plat simple
Coordonnées Tel : 06 88 06 96 96 Mail : wpierre@ec-lyon.fr		
Plan vérifié par LOD		Quantité 4 / Matériau acier s235 / Version 1.0
		Echelle 1:1 / N° 17M_I_045_CHP / Feuille 1/1

University	Ecole Centrale de Lyon		Back to BOM	**Car #**	81	**Part Cost**	$ 2.21
System	Frame & Body	**FileLink1**				**Qty**	7
Assembly	Undertray	**FileLink2**		**FileLink1**			
Part	Double Pan Mounts	**FileLink3**		**FileLink2**		**Extended Cost**	$ 15.50
P/N Base	FR 04005			**FileLink3**			
Suffix	AA						
Details	Undertray Mounts with two attachs						

ItemOrder	Material	Use	UnitCost	Size1	Unit1	Size2	Unit2	Area Name	Area	Length	Density	Quantity	Sub Total
10	Steel, Mild (per kg)	Tab 2_25	$ 2.25	0.017	kg			Rectangular	1.44E-03	1.50E-03	7850	1	$ 0.04
												Sub Total	**$ 0.04**

ItemOrder	Process	Use	UnitCost	Unit	Quantity	Multiplier	Mult. Val.	Sub Total
10	Machining Setup, Install and remove	Setup for laser cut	$ 1.30	Unit	1	7 parts cut from a single machine	0.143	$ 0.19
20	Laser Cut	Laser cut of the tab	$ 0.01	cm	33	Material - Steel	3	$ 0.99
30	Sheet metal bends	Tab bending	$ 0.25	bend	4			$ 1.00
							Sub Total	**$ 2.18**

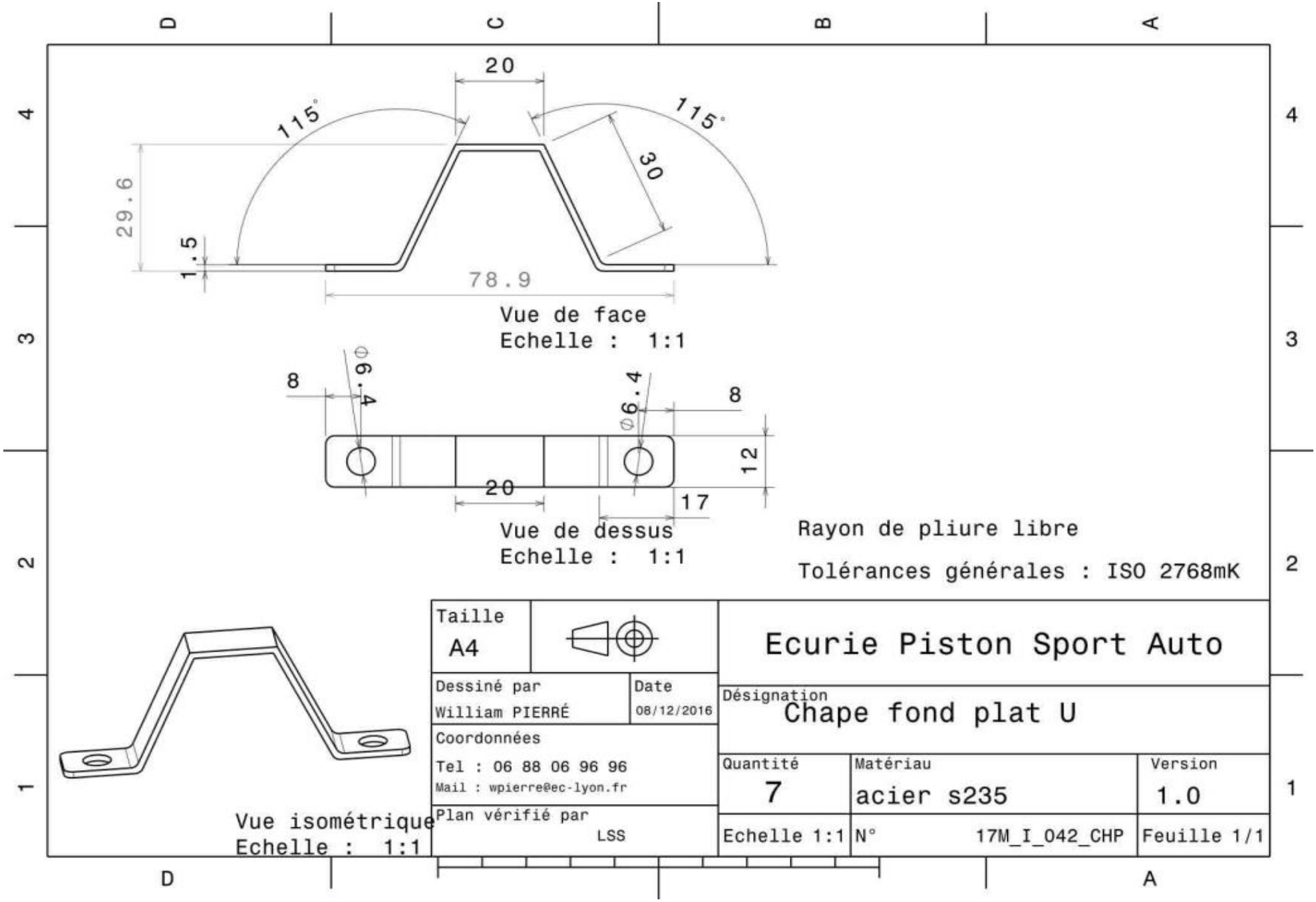
20
115°
115°
30
29.6
1.5
78.9
Vue de face
Echelle : 1:1
8
Ø6.4
Ø6.4
8
12
20
17
Vue de dessus
Echelle : 1:1
Rayon de pliure libre
Tolérances générales : ISO 2768mK
Vue isométrique
Echelle : 1:1
Taille
A4
Dessiné par
William PIERRÉ
Date
08/12/2016
Coordonnées
Tel : 06 88 06 96 96
Mail : wpierre@ec-lyon.fr
Plan vérifié par
LSS
Ecurie Piston Sport Auto
Désignation
Chape fond plat U
Quantité
7
Matériau
acier s235
Version
1.0
Echelle 1:1
N°
17M_I_042_CHP
Feuille 1/1

University	Ecole Centrale de Lyon	Back to BOM	**Car #**	81	**Asm Cost** $ 60.34
System	Frame & Body				**Qty** 1
Assembly	Clutch Actuation System		**FileLink1**		
P/N Base	FR A0005		**FileLink2**		**Extended Cost** $ 60.34
Suffix	AA		**FileLink3**		
Details	The clutch lever				

ItemOrder	Part	Part Cost	Quantity	Sub Total
10	Lever Handle	$ 4.37	1	$ 4.37
20	Handle padding	$ 7.40	1	$ 7.40
30	Clutch mount	$ 1.60	1	$ 1.60
40	Lever joint	$ 11.77	1	$ 11.77
50	Actuation Lever	$ 10.15	1	$ 10.15
			Sub Total	**$ 35.28**

ItemOrder	Material	Use	UnitCost	Size1	Unit1	Size2	Unit2	Area Name	Area	Length	Density	Quantity	Sub Total
10	Cable, Pull	Clutch actuation	$ 15.00	1.3	m					1.30		1.30	$ 19.50
20	Paint	Protect clutch mount from rust	$ 10.00	0.05	m^2							0.05	$ 0.50
20	Cable Adjuster	Clutch cable	$ 1.00									2.00	$ 2.00
												Sub Total	**$ 22.00**

ItemOrder	Process	Use	UnitCost	Unit	Quantity	Multiplier	Mult. Val.	Sub Total
10	Weld	Welding clutch mount on frame	$ 0.15	cm	6		1	$ 0.90
20	Aerosol Apply	Protect clutch mount from rust	$ 5.25	m^2	0.05		1	$ 0.26
30	Assemble, 1 kg, Line-on-Line	Connect lever handle with clutch mount	$ 0.13	unit	1		1	$ 0.13
40	Assemble, 1 kg, Loose	Put handle padding on lever handle	$ 0.06	unit	1		1	$ 0.06
50	Ratchet <= 6.35 mm	Installation of M6 bolt between mount and lever handle	$ 0.50	unit	1		1	$ 0.50
60	Reaction Tool <= 6.35 mm	Installation of M6 nut blocking	$ 0.25	unit	1		1	$ 0.25
70	Assemble, 1 kg, Interference	Put lever joint on lever handle	$ 0.19	unit	1		1	$ 0.19
80	Assemble, 1 kg, Line-on-Line	Put clutch cable on clutch lever	$ 0.13	unit	1		1	$ 0.13
90	Assemble, 1 kg, Interference	Connect cable on engine	$ 0.19	unit	1		1	$ 0.19
							Sub Total	**$ 2.61**

ItemOrder	Fastener	Use	UnitCost	Size1	Unit1	Size2	Unit2	Quantity	Sub Total
10	Bolt, Grade 8.8 (SAE 5)		0.07	6	mm	32	mm	1	$ 0.07
20	Nut, Grade 8.8 (SAE 5)		0.03	6	mm			1	$ 0.03
30	Washer, Grade 8.8 (SAE 5)		0.01		unit			2	$ 0.02
								Sub Total	**$ 0.12**

ItemOrder	Tooling	Use	UnitCost	Unit	Quantity	PVF	FractionIncluded	Sub Total
10	Welds - Welding Fixture	Welding clutch mount on frame	$ 500.00	point	2	3000	1	$ 0.33
							Sub Total	**$ 0.33**

University	Ecole Centrale de Lyon		Back to BOM	**Car #**	81	**Part Cost**	$ 4.37
System	Frame & Body	Drawing :	FileLink1			**Qty**	1
Assembly	Clutch Actuation System		**FileLink2**	**FileLink1**			
Part	Lever Handle		**FileLink3**	**FileLink2**		**Extended Cost**	$ 4.37
P/N Base	FR 05001			**FileLink3**			
Suffix	AA						
Details							

ItemOrder	Material	Use	UnitCost	Size1	Unit1	Size2	Unit2	Area Name	Area	Length	Density	Quantity	Sub Total
10	Aluminium		$ 4.20	0.222	kg			Bar 381 mm Square	3.81E-04	0.215	2712	1	$ 0.93
												Sub Total	**$ 0.93**

ItemOrder	Process	Use	UnitCost	Unit	Quantity	Multiplier	Mult. Val.	Sub Total
10	Machining Setup, Install and remove		$ 1.30	Unit	1		1	$ 1.30
20	Machining	Main shape contouring	$ 0.04	cm^3	7.7	Material - Aluminium	1	$ 0.31
30	Machining Setup, Change		$ 0.65	Unit	1		1	$ 0.65
40	Machining		$ 0.04	cm^3	1.2	Material - Aluminium	1	$ 0.05
50	Machining Setup, Change		$ 0.65	Unit	1		1	$ 0.65
60	Machining		$ 0.04	cm^3	3.3	Material - Aluminium	1	$ 0.13
70	Drilled holes < 25.4 mm dia.	Weight reduction	$ 0.35	hole	1	Material - Aluminium	1	$ 0.35
							Sub Total	**$ 3.44**

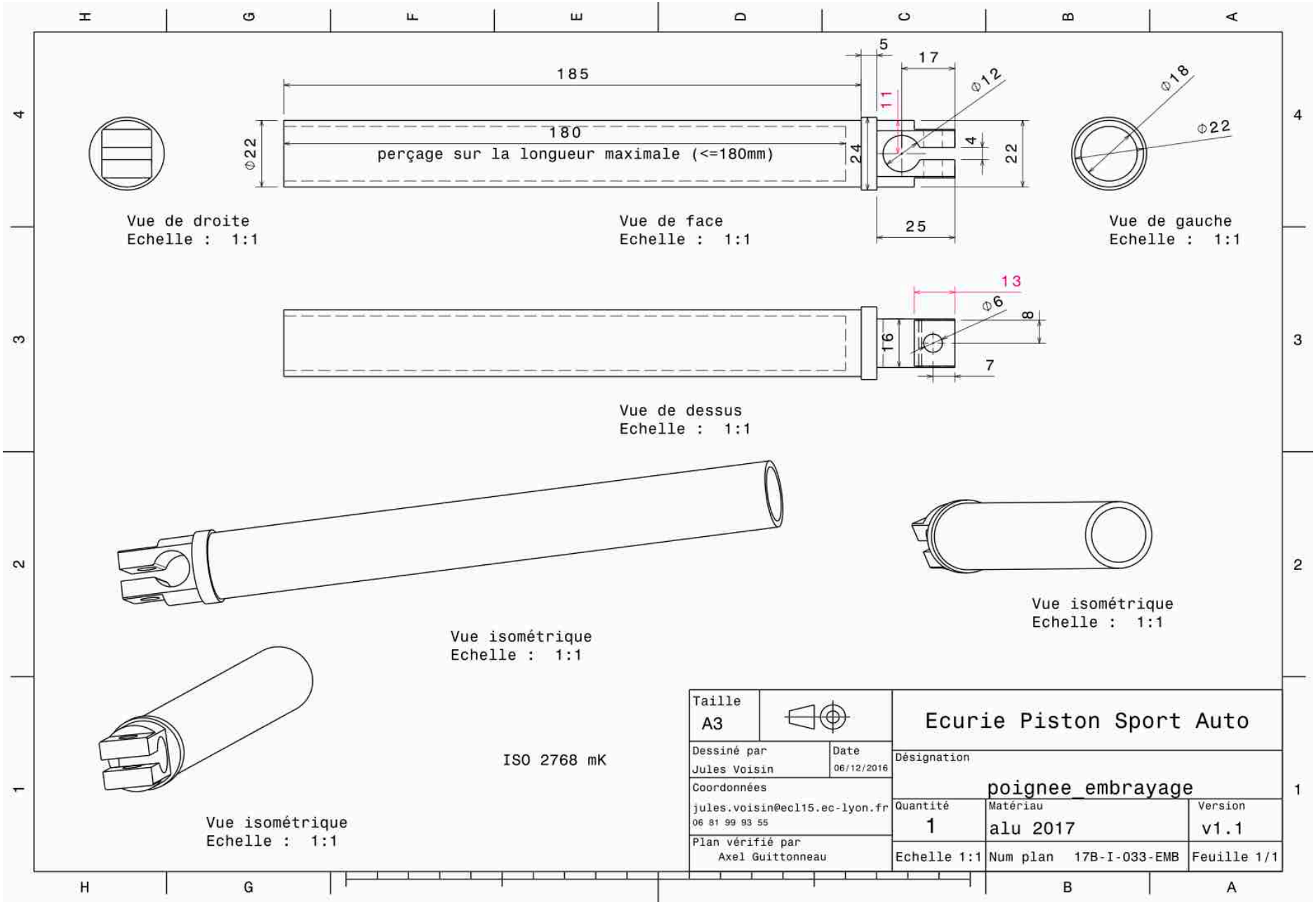
185
180
perçage sur la longueur maximale (<=180mm)
⌀22
5
17
⌀12
11
24
4
22
25
⌀18
⌀22
13
⌀6
8
16
7
Vue de droite
Echelle : 1:1
Vue de face
Echelle : 1:1
Vue de gauche
Echelle : 1:1
Vue de dessus
Echelle : 1:1
Vue isométrique
Echelle : 1:1
Vue isométrique
Echelle : 1:1
Vue isométrique
Echelle : 1:1
ISO 2768 mK
Taille
A3
Dessiné par
Jules Voisin
Date
06/12/2016
Coordonnées
jules.voisin@ecl15.ec-lyon.fr
06 81 99 93 55
Plan vérifié par
Axel Guittonneau
Ecurie Piston Sport Auto
Désignation
poignee_embrayage
Quantité
1
Matériau
alu 2017
Version
v1.1
Echelle 1:1
Num plan 17B-I-033-EMB
Feuille 1/1

University	Ecole Centrale de Lyon		Back to BOM	**Car #**	81	**Part Cost**	$ 7.40
System	Frame & Body	**FileLink1**				**Qty**	1
Assembly	Clutch Actuation System	**FileLink2**		**FileLink1**			
Part	Handle padding	**FileLink3**		**FileLink2**		**Extended Cost**	$ 7.40
P/N Base	FR 05002			**FileLink3**			
Suffix	AA						
Details	Smooth contact with hand						

ItemOrder	Material	Use	UnitCost	Size1	Unit1	Size2	Unit2	Area Name	Area	Length	Density	Quantity	Sub Total
10	Rubber	Smooth contact with hand	$ 3.30	0.100	kg						1100	1	$ 0.33
												Sub Total	**$ 0.33**

ItemOrder	Process	Use	UnitCost	Unit	Quantity	Multiplier	Mult. Val.	Sub Total
10	Die casting	Produce the handle padding	$ 4.00	kg				$ 0.40
							Sub Total	**$ 0.40**

ItemOrder	Tooling	Use	UnitCost	Unit	Quantity	PVF	FracIncld	Sub Total
10	Die Casting - Die	Produce the handle padding	$ 10,000.00	die	2	3000	1	$ 6.67
							Sub Total	**$ 6.67**

University	Ecole Centrale de Lyon		Back to BOM	**Car #**	81	**Part Cost**	$ 1.60
System	Frame & Body	Drawing :	FileLink1			**Qty**	1
Assembly	Clutch Actuation System		**FileLink2**	**FileLink1**			
Part	Clutch mount		**FileLink3**	**FileLink2**		**Extended Cost**	$ 1.60
P/N Base	FR 05003			**FileLink3**			
Suffix	AA						
Details							

ItemOrder	Material	Use	UnitCost	Size1	Unit1	Size2	Unit2	Area Name	Area	Length	Density	Quantity	Sub Total
10	Steel, mild	Stock material for part	$ 2.25	0.043	kg			Bar 113mm Square	1.13E-04	0.048	7850	1	$ 0.10
												Sub Total	**$ 0.10**

ItemOrder	Process	Use	UnitCost	Unit	Quantity	Multiplier	Mult. Val.	Sub Total
10	Machining Setup, Install and remove	Install and remove part from the machine	$ 1.30	unit	1			$ 1.30
20	Machining	Elaborate the part	$ 0.04	cm^3	5			$ 0.20
							Sub Total	**$ 1.50**

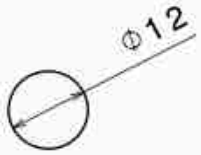

Vue de droite
Echelle : 1:1

Vue de face
Echelle : 1:1

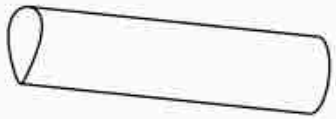

Vue isométrique
Echelle : 1:1

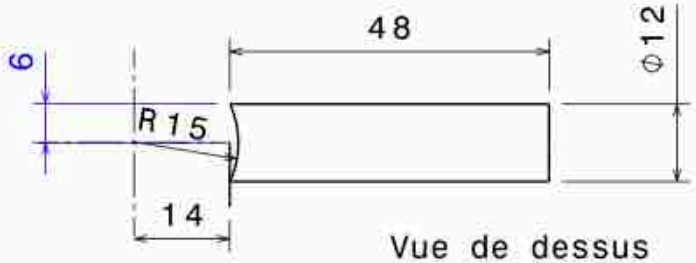

Vue de dessus
Echelle : 1:1

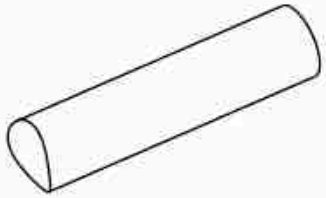

Vue isométrique
Echelle : 1:1

ISO 2768 - mK

Taille A4		Ecurie Piston Sport Auto
Dessiné par Jules Voisin	Date 06/12/2016	Désignation chape poignée embrayage
Coordonnées jules.voisin@ecl15.ec-lyon.fr 06 81 99 93 55		
Quantité 1	Matériau acier S235	Version v1.0
Plan vérifié par Axel Guittonneau	Echelle 1:1	Num plan 17B-I-032-EMB / Feuille 1/1

University	Ecole Centrale de Lyon		Back to BOM	**Car #**	81	**Part Cost**	$ 11.77
System	Frame & Body	**FileLink1**				**Qty**	1
Assembly	Clutch Actuation System	**FileLink2**		**FileLink1**			
Part	Lever joint	**FileLink3**		**FileLink2**		**Extended Cost**	$ 11.77
P/N Base	FR 05004			**FileLink3**			
Suffix	AA						
Details	This part was taken on a damaged motorcycle, but cost as made						

ItemOrder	Material	Use	UnitCost	Size1	Unit1	Size2	Unit2	Area Name	Area	Length	Density	Quantity	Sub Total
10	Steel, mild	Stock material for part	$ 2.25	0.250	kg						7850	1	$ 0.56
												Sub Total	**$ 0.56**

ItemOrder	Process	Use	UnitCost	Unit	Quantity	Multiplier	Mult. Val.	Sub Total
10	Die Casting - Die	Produce thelever joint	$ 4.00	die	0.25	1	1	$ 1.00
20	Machining Setup, Install and remove		$ 1.30	unit				$ 1.30
30	Machining	Main shape finish	$ 0.04	cm^3	6	material steel	3	$ 0.72
40	Machining Setup, Change		$ 0.65	unit	1			$ 0.65
50	Machining	Collar finish	$ 0.04	cm^3	0.6	material-steel	3	$ 0.07
60	Drilled holes < 25.4 mm dia.	Axle holes	$ 0.35	hole	2			$ 0.70
70	Threading, Internal (machining)		$ 0.10	cm	1			$ 0.10
							Sub Total	**$ 4.54**

ItemOrder	Tooling	Use	UnitCost	Unit	Quantity	PVF	FracIncld	Sub Total
10	Die Casting - Die	Produce the handle padding	$ 10,000.00	die	2	3000	1	$ 6.67
							Sub Total	**$ 6.67**

University	Ecole Centrale de Lyon		Back to BOM	**Car #**	81	**Part Cost**	$ 10.15
System	Frame & Body	**FileLink1**				**Qty**	1
Assembly	Clutch Actuation System	**FileLink2**		**FileLink1**			
Part	Actuation lever	**FileLink3**		**FileLink2**		**Extended Cost**	$ 10.15
P/N Base	FR 05005			**FileLink3**			
Suffix	AA						
Details							

ItemOrder	Material	Use	UnitCost	Size1	Unit1	Size2	Unit2	Area Name	Area	Length	Density	Quantity	Sub Total
10	Aluminum, Normal	Material for part	$ 4.20	0.150	kg						2712	1	$ 0.63
												Sub Total	**$ 0.63**

ItemOrder	Process	Use	UnitCost	Unit	Quantity	Multiplier	Mult. Val.	Sub Total
10	Die Casting - Die	Produce the lever casting	$ 4.00	kg	0.15	1	1	$ 0.60
20	Machining Setup, Install and remove		$ 1.30	unit	1			$ 1.30
30	Machining	Main shape finish	$ 0.04	cm^3	6.3	material-aluminium	1	$ 0.25
40	Drilled holes < 25.4 mm dia.	Axle holes	$ 0.35	hole	2			$ 0.70
							Sub Total	**$ 2.85**

ItemOrder	Tooling	Use	UnitCost	Unit	Quantity	PVF	FracIncld	Sub Total
10	Die Casting - Die	produce the actuation lever	$ 10,000.00	die	2	3000	1	$ 6.67
							Sub Total	**$ 6.67**

University	Ecole Centrale de Lyon	Car #	81	Asm Cost	$ 116.52
System	Frame & Body			Qty	1
Assembly	Shifter	FileLink1			
P/N Base	FR A0006	FileLink2		Extended Cost	$ 116.52
Suffix	AA	FileLink3			
Details					

Back to BOM

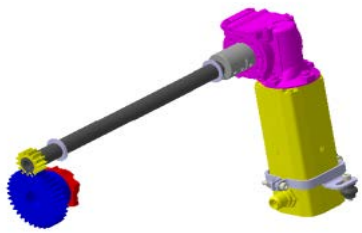

ItemOrder	Part	Part Cost	Quantity	Sub Total
10	Engine gear box drum gear	$ 14.58	1	$ 14.58
20	Engine gear box shifting pinion shaft	$ 17.64	1	$ 17.64
30	Engine gear box actuator tab	$ 1.89	1	$ 1.89
40	Front engine gearbox actuator mount	$ 2.83	1	$ 2.83
50	Rear gearbox actuator mount	$ 2.65	1	$ 2.65
60	Engine gearbox actuator coupling	$ 7.49	1	$ 7.49
			Sub Total	$ 47.07

ItemOrder	Material	Use	UnitCost	Size1	Unit1	Size2	Unit2	Area Name	Area	Length	Density	Quantity	Sub Total
10	Paint	Protect steel tab from rust	$ 10.00	0.005	m^2							1	$ 0.05
20	Motor, 12 Volt, DC Brushless Servo	Engine gearbox actuator (motoreductor)	$ 40.00	40	unit							1	$ 40.00
30	Mount, Vibration-Damping Sandwich	Maintain motor to frame	$ 2.43	9	mm						-	1	$ 2.43
												Sub Total	$ 42.48

ItemOrder	Process	Use	UnitCost	Unit	Quantity	Multiplier	Mult. Val.	Sub Total
10	Weld	Welding gear tab on frame	$ 0.15	cm	5		1	$ 0.75
20	Aerosol Apply	Protect gear tab from rust	$ 5.25	m^2	0.005		1	$ 0.03
30	Power Tool <= 25.4 mm	Remove engine case bolts	$ 0.25	unit	13	Disassemble	0.8	$ 2.60
40	Assemble, 3 kg, Line-on-Line	Remove engine case	$ 0.38	unit	1	Disassemble	0.8	$ 0.30
50	Power Tool <= 6.35 mm	Remove clutch pressure bolts	$ 0.25	unit	5	Disassemble	0.8	$ 1.00
60	Assemble, 1 kg, Loose	Remove clutch pressure springs	$ 0.06	unit	5	Disassemble	0.8	$ 0.25
70	Assemble, 1 kg, Loose	Remove pressure disc assembly	$ 0.06	unit	1	Disassemble	0.8	$ 0.05
80	Assemble, 1 kg, Loose	Remove clutch disc assembly	$ 0.06	unit	1	Disassemble	0.8	$ 0.05
90	Power Tool <= 25.4 mm	Remove central clutch nut	$ 0.25	unit	1	Disassemble	0.8	$ 0.20
100	Assemble, 1 kg, Loose	Remove central clutch assembly	$ 0.06	unit	1	Disassemble	0.8	$ 0.05
110	Assemble, 1 kg, Loose	Remove clutch guide	$ 0.06	unit	1	Disassemble	0.8	$ 0.05
120	Assemble, 1 kg, Loose	Remove clutch roller case assembly	$ 0.06	unit	1	Disassemble	0.8	$ 0.05
130	Assemble, 1 kg, Loose	Remove clutch flywheel	$ 0.06	unit	1	Disassemble	0.8	$ 0.05
140	Power Tool <= 6.35 mm	Remove shifting shaft retaining bolt	$ 0.25	unit	5	Disassemble	0.8	$ 1.00
150	Assemble, 1 kg, Loose	Remove shifting shaft retaining plate	$ 0.06	unit	1	Disassemble	0.8	$ 0.05
160	Assemble, 3 kg, Line-on-Line	Remove shifting shaft	$ 0.38	unit	1	Disassemble	0.8	$ 0.30
170	Power Tool <= 25.4 mm	Remove Shifting shaft stop	$ 0.25	unit	1	Disassemble	0.8	$ 0.20
180	Power Tool <= 6.35 mm	Remove gearshift drum stopper bolt	$ 0.25	unit	1	Disassemble	0.8	$ 0.20
190	Assemble, 1 kg, Interference	Remove shift drum stopper assembly	$ 0.19	unit	1	Disassemble	0.8	$ 0.15
200	Power Tool <= 25.4 mm	Remove shift star bolt	$ 0.25	unit	1	Disassemble	0.8	$ 0.20
210	Assemble, 1 kg, Loose	Mount gearbox drum gear	$ 0.06	unit	1		1	$ 0.06
220	Power Tool <= 25.4 mm	Tighten shift star bolt	$ 0.25	unit	1		1	$ 0.25
230	Assemble, 1 kg, Interference	Mount retaining ring on shifting pinion shaft	$ 0.19	unit	1		1	$ 0.19
240	Assemble, 1 kg, Loose	Mount washer on shifting pinion shaft	$ 0.06	unit	1		1	$ 0.06
250	Assemble, 1 kg, Line-on-Line	Mount shifting pinion shaft	$ 0.13	unit	1		1	$ 0.13
260	Assemble, 1 kg, Loose	Mount washer on shifting pinion shaft	$ 0.06	unit	1		1	$ 0.06
270	Assemble, 1 kg, Interference	Mount retaining ring on shifting pinion shaft	$ 0.19	unit	1		1	$ 0.19
280	Assemble, 1 kg, Line-on-Line	Mount gearbox actuator coupling	$ 0.13	unit	1		1	$ 0.13
290	Assemble, 3 kg, Loose	Mount clutch flywheel	$ 0.19	unit	1		1	$ 0.19
300	Assemble, 1 kg, Loose	Mount clutch roller case assembly	$ 0.06	unit	1		1	$ 0.06
310	Assemble, 1 kg, Loose	Mount clutch guide	$ 0.06	unit	1		1	$ 0.06
320	Assemble, 1 kg, Loose	Mount central clutch	$ 0.06	unit	1		1	$ 0.06
330	Assemble, 1 kg, Loose	Mount central clutch washers	$ 0.06	unit	1		1	$ 0.06
340	Power Tool <= 25.4 mm	Tighten central clutch nut	$ 0.25	unit	1		0.8	$ 0.20
350	Assemble, 1 kg, Loose	Mount clutch discs	$ 0.06	unit	1		1	$ 0.06
360	Assemble, 1 kg, Loose	Mount pressure disc assembly	$ 0.06	unit	1		1	$ 0.06
370	Assemble, 1 kg, Loose	Mount clutch pressure springs	$ 0.06	unit	1		1	$ 0.06

380	Power Tool <= 6.35 mm	Mount clutch pressure bolts	$ 0.25	unit	5	Fastener Engagement Length > 2D	1.25	$ 1.56
390	Assemble, 3 kg, Line-on-Line	Mount engine case	$ 0.38	unit	1		1	$ 0.38
400	Power Tool <= 25.4 mm	Mount engine case bolts	$ 0.25	unit	13	Fastener Engagement Length > 2D	1.25	$ 4.06
410	Assemble, 1 kg, Loose	Mount front actuator mount	$ 0.06	unit	1		1	$ 0.06
420	Assemble, 1 kg, Loose	Mount rear actuator mount	$ 0.06	unit	1		1	$ 0.06
430	Assemble, 1 kg, Loose	Mount washers on screws	$ 0.06	unit	2		1	$ 0.13
440	Assemble, 1 kg, Loose	Mount screws on actuator mount	$ 0.06	unit	2		1	$ 0.13
450	Assemble, 1 kg, Loose	Mount washers on screws	$ 0.06	unit	2		1	$ 0.13
460	Hand - Start Only	Mount nut on screws	$ 0.12	unit	2			$ 0.24
470	Assemble, 3 kg, Line-on-Line	Mount actuator assembly on coupling	$ 0.38	unit	1		1	$ 0.38
480	Assemble, 1 kg, Loose	Mount elastomere on tab	$ 0.06	unit	1		1	$ 0.06
490	Assemble, 1 kg, Loose	Align rear mount with tab	$ 0.06	unit	1		1	$ 0.06
500	Assemble, 1 kg, Loose	Mount washer on elastomere screw	$ 0.06	unit	1		1	$ 0.06
510	Wrench <= 6.35 mm	Tighten elastomer screw	$ 1.00	unit		Fastener Engagement Length > 4D	1.5	$ 1.50
520	Wrench <= 6.35 mm	Tighten actuator mount's bolts	$ 1.00	unit	2		1.25	$ 2.50
530	Reaction Tool <= 6.35 mm		$ 0.25	unit	2			$ 0.50
540	Wrench <= 6.35 mm	Tighten coupling bolts	$ 1.00	unit	4		1.25	$ 5.00
							Sub Total	**$ 26.23**

ItemOrder	Fastener	Use	UnitCost	Size1	Unit1	Size2	Unit2	Quantity	Sub Total
10	Bolt, Grade 8.8 (SAE 5)	Fasten star gear to the shaft	0.16	8	mm	40	mm	1	$ 0.16
20	Bolt, Grade 8.8 (SAE 5)	Lock actuator between mount brackets	0.02	4	mm	20	mm	3	$ 0.06
30	Washer, Grade 8.8 (SAE 5)	Lock actuator between mount brackets	0.01	4	mm			5	$ 0.05
40	Nut, Grade 8.8 (SAE 5)	Lock actuator between mount brackets	0.01	4	mm			2	$ 0.02
50	Washer, Grade 8.8 (SAE 5)	Make contact between rings and engine case	0.01	14	mm	21		2	$ 0.02
60	Retaining Ring, External	Retain shifting pinion shaft	0.05	14	mm			2	$ 0.10
								Sub Total	**$ 0.41**

ItemOrder	Tooling	Use	UnitCost	Unit	Quantity	PVF	FractionIncluded	Sub Total
10	Welds - Welding Fixture	Welding gear tab on frame	$ 500.00	point	2	3000	1	$ 0.33
							Sub Total	**$ 0.33**

University	Ecole Centrale de Lyon		Back to BOM	**Car #**	81	**Part Cost**	$ 14.58
System	Frame & Body	**FileLink1**				**Qty**	1
Assembly	Shifter	**FileLink2**		**FileLink1**			
Part	Engine gear box drum gear	**FileLink3**		**FileLink2**		**Extended Cost**	$ 14.58
P/N Base	FR 06001			**FileLink3**			
Suffix	AA						
Details							

ItemOrder	Material	Use	UnitCost	Size1	Unit1	Size2	Unit2	Area Name	Area	Length	Density	Quantity	Sub Total
10	Steel, Alloy	Material for part	$ 2.25	1.079	kg			circle area, 27mm diam.	5.73E-04	0.240	7850	1	$ 2.43
												Sub Total	**$ 2.43**

ItemOrder	Process	Use	UnitCost	Unit	Quantity	Multiplier	Mult. Val.	Sub Total
10	Machining Setup, Install and remove	Setup for machining	$ 1.30	unit	1		1	$ 1.30
20	Machining	Shift star contact	$ 0.04	cm^3	50	Material - Steel	3	$ 6.00
30	Machining Setup, Change		$ 0.65	unit	1		1	$ 0.65
40	Machining	Screw holes	$ 0.04	cm^3	5	Material - Steel	3	$ 0.60
50	Drilled holes < 25.4 mm dia.		$ 0.35	hole	6		1	$ 2.10
50	Gear Shaping (hobbing)		$ 0.50	cm	1	Material - Steel	3	$ 1.50
							Sub Total	**$ 12.15**

University	Ecole Centrale de Lyon		Back to BOM	**Car #**	81	**Part Cost**	$ 17.64
System	Frame & Body	**FileLink1**				**Qty**	1
Assembly	Shifter	**FileLink2**		**FileLink1**			
Part	Engine gear box shifting pinion shaft	**FileLink3**		**FileLink2**		**Extended Cost**	$ 17.64
P/N Base	FR 06002			**FileLink3**			
Suffix	AA						
Details							

ItemOrder	Material	Use	UnitCost	Size1	Unit1	Size2	Unit2	Area Name	Area	Length	Density	Quantity	Sub Total
10	Steel, Alloy	Material for part	$ 2.25	1.079	kg			circle, 27mm diam.	5.73E-04	0.240	7850	1	$ 2.43
												Sub Total	**$ 2.43**

ItemOrder	Process	Use	UnitCost	Unit	Quantity	Multiplier	Mult. Val.	Sub Total
10	Machining Setup, Install and remove	Setup for machining	$ 1.30	unit	1		1	$ 1.30
20	Machining	Shift star contact	$ 0.04	cm^3	97	Material - Steel	3	$ 11.64
30	Machining Setup, Change		$ 0.65	unit	1		1	$ 0.65
40	Machining	Screw holes	$ 0.04	cm^3	1	Material - Steel	3	$ 0.12
50	Gear Shaping (hobbing)		$ 0.50	cm	1	Material - Steel	3	$ 1.50
							Sub Total	**$ 15.21**

University	Ecole Centrale de Lyon		Back to BOM	**Car #**	81	**Part Cost**	$ 1.89
System	Frame & Body	Drawing :	FileLink1			**Qty**	1
Assembly	Shifter		**FileLink2**	**FileLink1**			
Part	Engine gear box actuator tab		**FileLink3**	**FileLink2**		**Extended Cost**	$ 1.89
P/N Base	FR 06003			**FileLink3**			
Suffix	AA						
Details							

ItemOrder	Material	Use	UnitCost	Size1	Unit1	Size2	Unit2	Area Name	Area	Length	Density	Quantity	Sub Total
10	Steel, Mild, (per kg)	Material for the tube part	$ 2.25	0.020	kg			rectangular area, 23x37 mm	8.51E-04	0.003	7850	1	$ 0.05
												Sub Total	**$ 0.05**

ItemOrder	Process	Use	UnitCost	Unit	Quantity	Multiplier	Mult. Val.	Sub Total
10	Machining Setup, Install and remove	Setup for laser cut	$ 1.30	unit	1		1	$ 1.30
20	Laser Cut		$ 0.01	cm	18	Material - Steel	3	$ 0.54
							Sub Total	**$ 1.84**

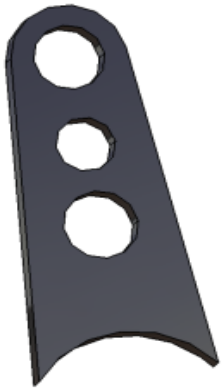

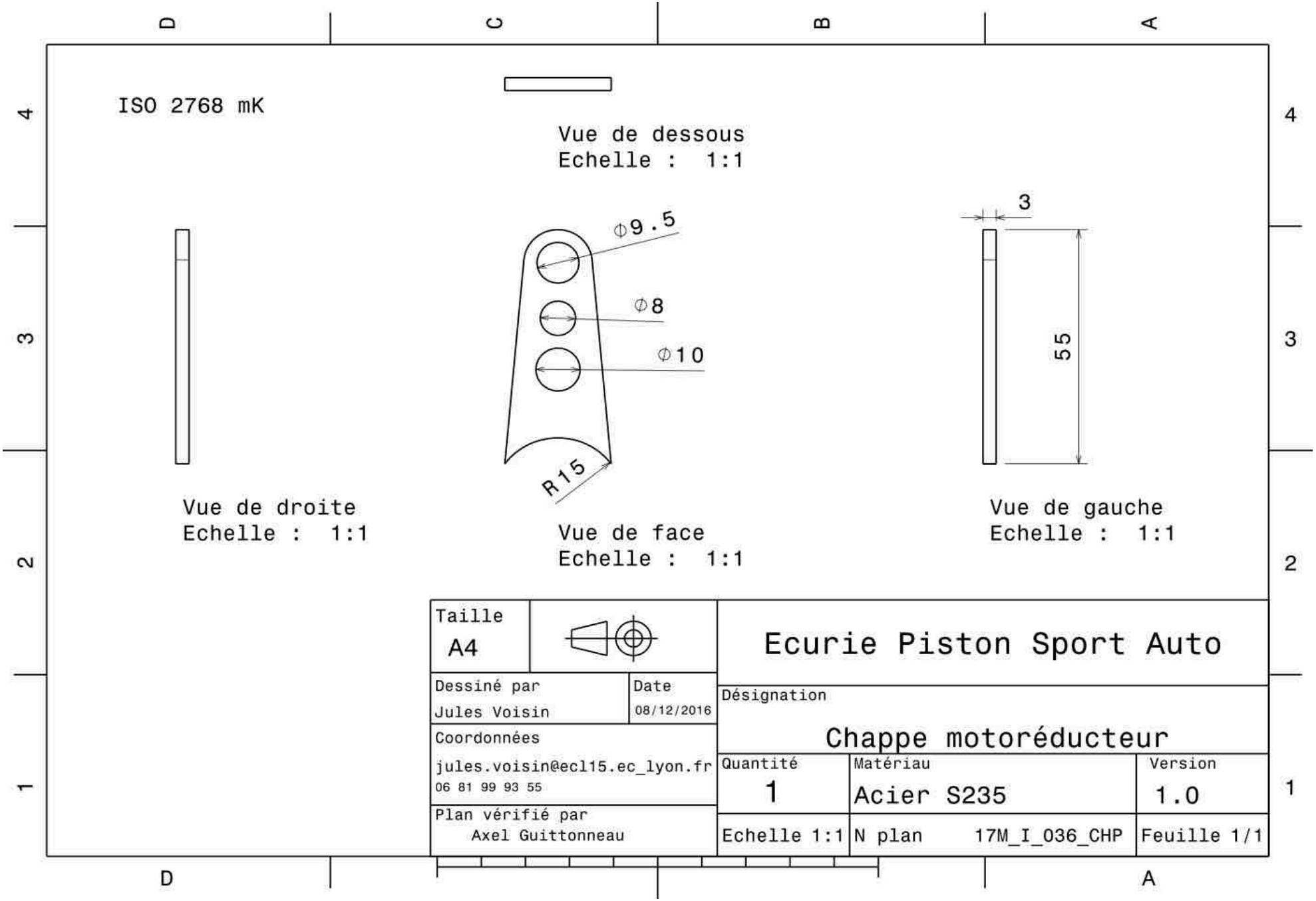
ISO 2768 mK
Vue de dessous
Echelle : 1:1
Vue de droite
Echelle : 1:1
Φ9.5
Φ8
Φ10
R15
Vue de face
Echelle : 1:1
3
55
Vue de gauche
Echelle : 1:1
Taille
A4
Ecurie Piston Sport Auto
Dessiné par
Jules Voisin
Date
08/12/2016
Désignation
Chappe motoréducteur
Coordonnées
jules.voisin@ecl15.ec_lyon.fr
06 81 99 93 55
Quantité
1
Matériau
Acier S235
Version
1.0
Plan vérifié par
Axel Guittonneau
Echelle 1:1
N plan
17M_I_036_CHP
Feuille 1/1

University	Ecole Centrale de Lyon		Back to BOM	**Car #**	81	**Part Cost**	$ 2.83
System	Frame & Body	Drawing :	FileLink1			**Qty**	1
Assembly	Shifter		**FileLink2**	**FileLink1**			
Part	Front engine gearbox actuator mount		**FileLink3**	**FileLink2**		**Extended Cost**	$ 2.83
P/N Base	FR 06004			**FileLink3**			
Suffix	AA						
Details							

ItemOrder	Material	Use	UnitCost	Size1	Unit1	Size2	Unit2	Area Name	Area	Length	Density	Quantity	Sub Total
10	Aluminum, Normal	material for part	$ 4.20	0.009	kg			rectangular area, 104x11 mm	1.14E-03	0.003	2712	1	$ 0.04
												Sub Total	**$ 0.04**

ItemOrder	Process	Use	UnitCost	Unit	Quantity	Multiplier	Mult. Val.	Sub Total
10	Machining Setup, Install and remove	Setup for laser cut	$ 1.30	unit	1		1	$ 1.30
20	Laser Cut		$ 0.01	cm	24	Material - aluminium	1	$ 0.24
30	Sheet metal bends		$ 0.25	bend	5		1	$ 1.25
							Sub Total	**$ 2.79**

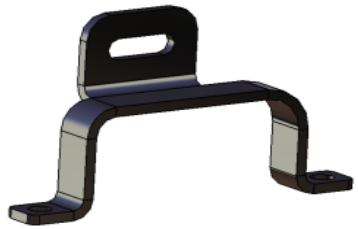

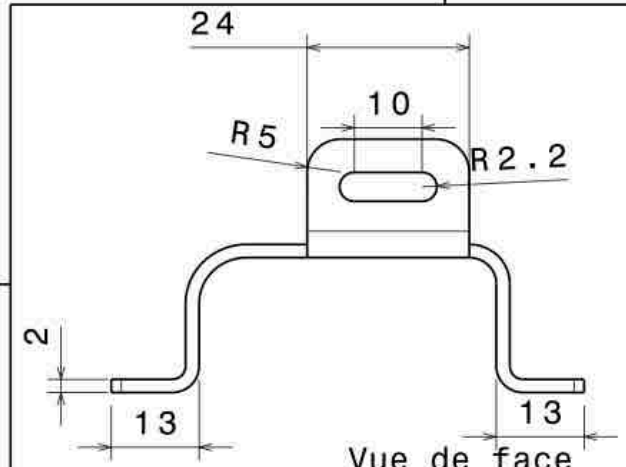

Vue de face
Echelle : 1:1

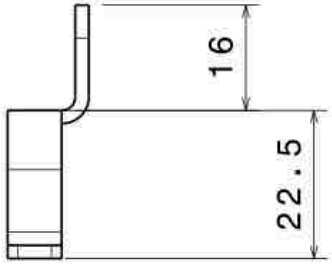

Vue de gauche
Echelle : 1:1

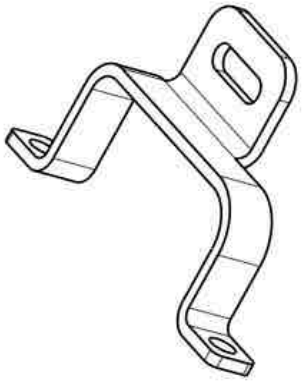

Vue isométrique
Echelle : 1:1

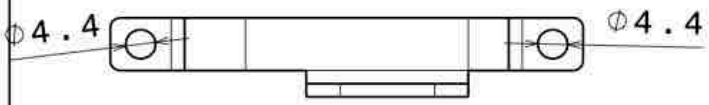

Vue de dessus
Echelle : 1:1

Rayon de courbure libre

Tolérances générales : ISO 2768mK

Taille A4		Ecurie Piston Sport Auto
Dessiné par William PIERRÉ	Date 07/01/2017	Désignation demi chappe avec support
Coordonnées Tel : 06 88 06 96 96 Mail : wpierre@ec-lyon.fr		Quantité 1 / Matériau alu 2017 / Version 1.0
Plan vérifié par LOD		Echelle 1:1 / N° 17M_I_082_WPE / Feuille 1/1

University	Ecole Centrale de Lyon		Back to BOM	**Car #**	81	**Part Cost**	$ 2.65
System	Frame & Body	Drawing :	FileLink1			**Qty**	1
Assembly	Shifter		**FileLink2**	**FileLink1**			
Part	Rear gearbox actuator mount		**FileLink3**	**FileLink2**		**Extended Cost**	$ 2.65
P/N Base	FR 06005			**FileLink3**			
Suffix	AA						
Details							

ItemOrder	Material	Use	UnitCost	Size1	Unit1	Size2	Unit2	Area Name	Area	Length	Density	Quantity	Sub Total
10	Aluminum, Normal	material for part	$ 4.20	0.026	kg			Rectangular area, 105x30 mm	3.15E-03	0.003	2712	1	$ 0.11
												Sub Total	**$ 0.11**

ItemOrder	Process	Use	UnitCost	Unit	Quantity	Multiplier	Mult. Val.	Sub Total
10	Machining Setup, Install and remove	Setup for laser cut	$ 1.30	unit	1		1	$ 1.30
20	Laser Cut		$ 0.01	cm	24	Material - aluminium	1	$ 0.24
30	Sheet metal bends		$ 0.25	bend	4		1	$ 1.00
							Sub Total	**$ 2.54**

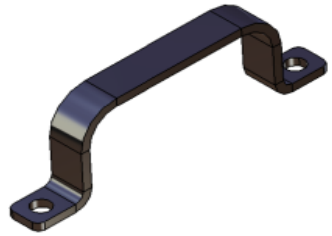

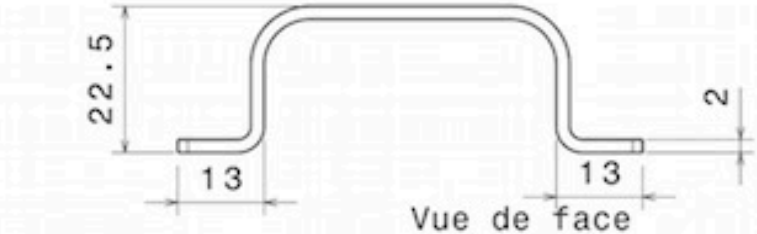

Vue de face
Echelle : 1:1

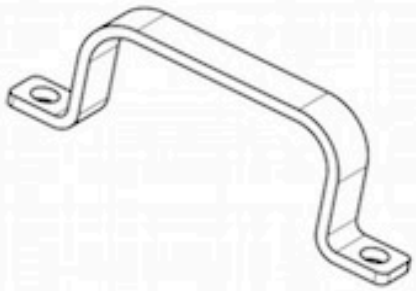

Vue isométrique
Echelle : 1:1

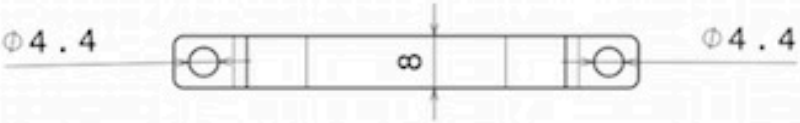

Vue de dessus
Echelle : 1:1

Rayon de courbure libre

Tolérances générales : ISO 2768mK

Taille A4		Ecurie Piston Sport Auto
Dessiné par William PIERRÉ	Date 07/01/2017	Désignation demi chappe sans support
Coordonnées Tel : 06 88 06 96 96 Mail : wpierre@ec-lyon.fr		Quantité 1 / Matériau alu 2017 / Version 1.0
Plan vérifié par LOD		Echelle 1:1 / N° 17M_I_085_WPE / Feuille 1/1

University	Ecole Centrale de Lyon		Back to BOM	**Car #**	81	**Part Cost**	$ 7.49
System	Frame & Body	**FileLink1**				**Qty**	1
Assembly	Shifter	**FileLink2**		**FileLink1**			
Part	Engine gearbox actuator coupling	**FileLink3**		**FileLink2**		**Extended Cost**	$ 7.49
P/N Base	FR 06006			**FileLink3**			
Suffix	AA						
Details	Bought, cost as made						

ItemOrder	Material	Use	UnitCost	Size1	Unit1	Size2	Unit2	Area Name	Area	Length	Density	Quantity	Sub Total
10	Steel, Normal	Material for part	$ 2.25	0.180	kg			circle, 27mm diam.	5.73E-04	0.04	7850	1	$ 0.40
												Sub Total	**$ 0.40**

ItemOrder	Process	Use	UnitCost	Unit	Quantity	Multiplier	Mult. Val.	Sub Total
10	Machining Setup, Install and remove	Setup for machining	$ 1.30	unit	1		1	$ 1.30
20	Machining		$ 0.04	cm^3	5	Material - Steel	3	$ 0.60
30	Machining Setup, Change		$ 0.65	unit	1		1	$ 0.65
40	Machining		$ 0.04	cm^3	3	Material - Steel	3	$ 0.36
50	Machining Setup, Change		$ 0.65	unit	1		1	$ 0.65
60	Machining		$ 0.04	cm^3	1	Material - Steel	3	$ 0.12
70	Machining Setup, Change		$ 0.65	unit	1		1	$ 0.65
80	Machining		$ 0.04	cm^3	1	Material - Steel	3	$ 0.12
90	Drilled holes < 25.4 mm dia.		$ 0.35	hole	4		1	$ 1.40
100	Threading, Internal (machining)		$ 0.10	cm	4	Material - Steel	3	$ 1.20
							Sub Total	**$ 7.05**

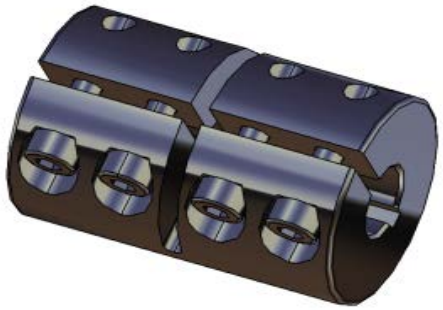

ItemOrder	Fastener	Use	UnitCost	Size1	Unit1	Size2	Unit2	Quantity	Sub Total
10	Bolt, Grade 8.8 (SAE 5)		$ 0.01	3	mm	10	mm	4	$ 0.04
								Sub Total	**$ 0.04**

University	Ecole Centrale de Lyon	Back to BOM	**Car #**	81	**Asm Cost** $ 1,812.62
System	Frame & Body				**Qty** 1
Assembly	Body		**FileLink1**		
P/N Base	FR A0007		**FileLink2**		**Extended Cost** $ 1,812.62
Suffix	AA		**FileLink3**		
Details	Complete body assembly				

ItemOrder	Part	Part Cost	Quantity	Sub Total
10	Body Front	$ 504.48	1	$ 504.48
20	Body Right Inlet	$ 273.95	1	$ 273.95
30	Body Left Inlet	$ 273.95	1	$ 273.95
40	Body Plates	$ 317.22	2	$ 634.44
50	Front Body and Top Body Inlet Mounts	$ 0.64	8	$ 5.09
60	Bottom Body Inlet Mounts	$ 0.93	6	$ 5.58
			Sub Total	**$ 1,697.49**

ItemOrder	Material	Use	UnitCost	Size1	Unit1	Size2	Unit2	Area Name	Area	Length	Density	Quantity	Sub Total
10	Paint	Protect Mounts from rust	$ 10.00	0.007	m²								$ 0.07
												Sub Total	**$ 0.07**

ItemOrder	Process	Use	UnitCost	Unit	Quantity	Multiplier	Mult. Val.	Sub Total
10	Weld	Weld Body Mounts to frame	$ 0.15	cm	24			$ 3.60
20	Aerosol Apply	Protect Mounts from rust	$ 5.25	m²	0.007			$ 0.04
30	Riveting	Crimp the nutserts (top inlet fasteners)	$ 0.25	unit	4			$ 1.00
40	Assemble, 3 kg, Line-on-Line	Left Inlet	$ 0.38	unit	1			$ 0.38
50	Screwdriver > 1 Turn	M6 bolts for fixing the top of the left inlet on its mounts	$ 0.50	unit	2			$ 1.00
60	Assemble, 1 kg, Line-on-Line	Bottom Body Left Inlet Mounts	$ 0.13	unit	3			$ 0.39
70	Screwdriver > 1 Turn	M5 bolts for bottom Left Inlet mounts	$ 0.50	unit	4	Repeat 3	3	$ 6.00
80	Reaction Tool <= 6.35 mm	Hold nuts for bottom Left inlet mounts fixing	$ 0.25	unit	4	Repeat 3	3	$ 3.00
90	Assemble, 3 kg, Line-on-Line	Right Inlet	$ 0.38	unit	1			$ 0.38
100	Screwdriver > 1 Turn	M6 bolts for fixing the top of the Right Inlet on its mounts	$ 0.50	unit	2			$ 1.00
110	Assemble, 1 kg, Line-on-Line	Bottom Body Right Inlet Mounts	$ 0.13	unit	3			$ 0.39
120	Screwdriver > 1 Turn	M5 bolts for bottom Right Inlet mounts	$ 0.50	unit	4	Repeat 3	3	$ 6.00
130	Reaction Tool <= 6.35 mm	Hold nuts for bottom Right Inlet mounts fixing	$ 0.25	unit	4	Repeat 3	3	$ 3.00
140	Assemble, 1 kg, Loose	Bolt from pin quick release (body front fasteners)	$ 0.06	unit	4			$ 0.24
150	Screwdriver > 1 Turn	Bolt from pin quick release (body front fasteners)	$ 0.50	unit	1	Repeat 4	4	$ 2.00
160	Reaction Tool <= 6.35 mm	Nuts from pin quick release (body front fasteners)	$ 0.25	unit	1	Repeat 4	4	$ 1.00
170	Assemble, 1 kg, Line-on-Line	Fix Velchro to frame	$ 0.13	unit	6	Repeat 2	2	$ 1.56
180	Assemble, 1 kg, Line-on-Line	Fix Body Plates to frame with Velchro	$ 0.13	unit	1	Repeat 2	2	$ 0.26
190	Assemble, 3 kg, Line-on-Line	Body Front (no tools needed)	$ 0.38	unit	1			$ 0.38
							Sub Total	**$ 31.62**

ItemOrder	Fastener	Use	UnitCost	Size1	Unit1	Size2	Unit2	Quantity	Sub Total
10	Pin Quick Release	Fix Body Front to frame	$ 16.56	8	mm	40	mm	4	$ 66.24
20	Nutsert	Fix top of both inlets	$ 0.22	6	mm			4	$ 0.90
30	Bolt, Grade 8.8 (SAE 5)	Fix top of both inlets	$ 0.04	6	mm	15	mm	4	$ 0.15
40	Washer, Grade 8.8 (SAE 5)	For M6 bolts to fix top of both inlets	$ 0.01	6	mm			4	$ 0.04
50	Bolt, Grade 8.8 (SAE 5)	Fix bottom of both inlets	$ 0.03	5	mm	15	mm	24	$ 0.62
60	Nut, Grade 8.8 (SAE 5)	Fix bottom of both inlets	$ 0.02	5	mm			24	$ 0.59
70	Washer, Grade 8.8 (SAE 5)	For M5 bolts to fix bottom of both inlets	$ 0.01	5	mm			24	$ 0.24
80	Hook and Loop, Hook Side (Velcro)	Fix Body Plates to frame	$ 0.003	2000	cm²				$ 6.00
90	Hook and Loop, Loop Side (Velcro)	Fix Body Plates to frame	$ 0.002	2000	cm²				$ 4.00
								Sub Total	**$ 78.77**

ItemOrder	Tooling	Use	UnitCost	Unit	Quantity	PVF	FractionIncluded	Sub Total
10	Welds	Welding Body and Top Inlet Mounts	$ 500.00	point	28	3000	1	$ 4.67
							Sub Total	**$ 4.67**

University	École Centrale de Lyon		Back to BOM	**Car #**	81	**Part Cost**	$ 504.48
System	Frame & Body	**FileLink1**				**Qty**	1
Assembly	Body	**FileLink2**		**FileLink1**			
Part	Body Front	**FileLink3**		**FileLink2**		**Extended Cost**	$ 504.48
P/N Base	FR 07001			**FileLink3**			
Suffix	AA						
Details	Body Front ready to be fixed, made with 2 fiber carbon plys and two glass fiber plys						

ItemOrder	Material	Use	UnitCost	Size1	Unit1	Size2	Unit2	Area Name	Area	Length	Density	Quantity	Sub Total
10	Carbon Fiber, 1 Ply	For the Front Body, Composite (Resine included)	$ 200.00	0.444	kg	60%	Fiber weight ratio	Area of the ply	0.703	0.0004	1580	1	$ 88.86
20	Glass Fiber, 1 Ply	For the Front Body, Composite (Resine included)	$ 100.00	0.619	kg	60%	Fiber weight ratio	Area of the ply	0.703	0.0004	2200	1	$ 61.86
30	Carbon Fiber, 1 Ply	For the Front Body, Composite (Resine included)	$ 200.00	0.444	kg	60%	Fiber weight ratio	Area of the ply	0.703	0.0004	1580	1	$ 88.86
40	Glass Fiber, 1 Ply	For the Front Body, Composite (Resine included)	$ 100.00	0.619	kg	60%	Fiber weight ratio	Area of the ply	0.703	0.0004	2200	1	$ 61.86
												Sub Total	**$ 301.45**

ItemOrder	Process	Use	UnitCost	Unit	Quantity	Multiplier	Mult. Val.	Sub Total
10	Lamination, Manual	Lamination of 4 plys	$ 35.00	m²	0.703	Repeat 4	4	$ 98.42
20	Resin Application, Manual	For the 4 plys	$ 5.00	m²	0.703	Repeat 4	4	$ 14.06
30	Cure, Room Temperature	Curing at room temperature	$ 10.00	m²	0.703		1	$ 7.03
40	Drilled holes < 25,4 mm dia.	For fasteners	$ 0.35	hole	1	Repeat 4	4	$ 1.40
50	Non metallic cutting > 76,2 mm	Boundary shaping	$ 1.40	cut	4	Material - Composite	2	$ 11.20
							Sub Total	**$ 132.11**

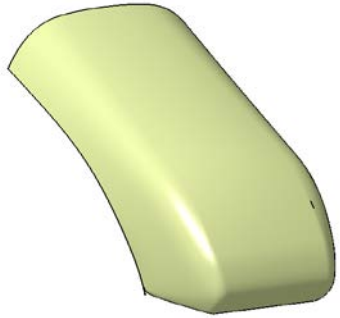

ItemOrder	Fastener	Use	UnitCost	Size1	Unit1	Size2	Unit2	Quantity	Sub Total
10	Pin Quick Release	Fix Body Front to frame on its mounts	$ 16.56	8	mm	40	mm	4	$ 66.24
								Sub Total	**$ 66.24**

ItemOrder	Tooling	Use	UnitCost	Unit	Quantity	PVF	FracIncld	Sub Total
10	Lamination	Lamination - Mold Tool	$ 20,000.00	m²	2.812	3000	4	$ 4.69
							Sub Total	**$ 4.69**

University	École Centrale de Lyon		Back to BOM	**Car #**	81	**Part Cost**	$ 273.95
System	Frame & Body	**FileLink1**				**Qty**	1
Assembly	Body	**FileLink2**		**FileLink1**			
Part	Body Right Inlet	**FileLink3**		**FileLink2**		**Extended Cost**	$ 273.95
P/N Base	FR 07002			**FileLink3**			
Suffix	AA						
Details	Body Right Inlet ready to be fixed, made with 2 fiber carbon plys and two glass fiber plys						

ItemOrder	Material	Use	UnitCost	Size1	Unit1	Size2	Unit2	Area Name	Area	Length	Density	Quantity	Sub Total
10	Carbon Fiber, 1 Ply	For the Body Right Inlet, Composite (Resine included)	$ 200.00	0.264	kg	60%	Fiber weight ratio	Area of the ply	0.418	0.0004	1580	1	$ 52.84
20	Glass Fiber, 1 Ply	For the Body Right Inlet, Composite (Resine included)	$ 100.00	0.368	kg	60%	Fiber weight ratio	Area of the ply	0.418	0.0004	2200	1	$ 36.78
30	Carbon Fiber, 1 Ply	For the Body Right Inlet, Composite (Resine included)	$ 200.00	0.264	kg	60%	Fiber weight ratio	Area of the ply	0.418	0.0004	1580	1	$ 52.84
40	Glass Fiber, 1 Ply	For the Body Right Inlet, Composite (Resine included)	$ 100.00	0.368	kg	60%	Fiber weight ratio	Area of the ply	0.418	0.0004	2200	1	$ 36.78
												Sub Total	**$ 179.24**

ItemOrder	Process	Use	UnitCost	Unit	Quantity	Multiplier	Mult. Val.	Sub Total
10	Lamination, Manual	Lamination of 4 plys	$ 35.00	m²	0.418	Repeat 4	4	$ 58.52
20	Resin Application, Manual	For the 4 plys	$ 5.00	m²	0.418	Repeat 4	4	$ 8.36
30	Cure, Room Temperature	Curing at room temperature	$ 10.00	m²	0.418		1	$ 4.18
40	Drilled holes < 25,4 mm dia.	For fasteners	$ 0.35	hole	1	Repeat 8	8	$ 2.80
50	Non metallic cutting > 76,2 mm	Boundary shaping	$ 1.40	cut	6	Material - Composite	2	$ 16.80
							Sub Total	**$ 90.66**

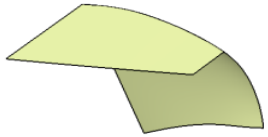

ItemOrder	Fastener	Use	UnitCost	Size1	Unit1	Size2	Unit2	Quantity	Sub Total
10	Nutsert	Fix top of both inlets	$ 0.22	6	mm			2	$ 0.45
20	Bolt, Grade 8.8 (SAE 5)	Fix top of both inlets	$ 0.04	6	mm	15	mm	2	$ 0.07
30	Washer, Grade 8.8 (SAE 5)	For M6 bolts to fix top of both inlets	$ 0.01	6	mm			2	$ 0.02
40	Bolt, Grade 8.8 (SAE 5)	Fix bottom of both inlets	$ 0.03	5	mm	15	mm	12	$ 0.31
50	Nut, Grade 8.8 (SAE 5)	Fix bottom of both inlets	$ 0.02	5	mm			12	$ 0.29
60	Washer, Grade 8.8 (SAE 5)	For M5 bolts to fix bottom of both inlets	$ 0.01	5	mm			12	$ 0.12
								Sub Total	**$ 1.26**

ItemOrder	Tooling	Use	UnitCost	Unit	Quantity	PVF	FracIncld	Sub Total
10	Lamination	Lamination - Mold Tool	$ 20,000.00	m²	1.672	3000	4	$ 2.79
							Sub Total	**$ 2.79**

University	École Centrale de Lyon		Back to BOM	**Car #**	81	**Part Cost**	$ 273.95
System	Frame & Body	**FileLink1**				**Qty**	1
Assembly	Body	**FileLink2**		**FileLink1**			
Part	Body Left Inlet	**FileLink3**		**FileLink2**		**Extended Cost**	$ 273.95
P/N Base	FR 07003			**FileLink3**			
Suffix	AA						
Details	Body Left Inlet ready to be fixed, made with 2 fiber carbon plys and two glass fiber plys						

ItemOrder	Material	Use	UnitCost	Size1	Unit1	Size2	Unit2	Area Name	Area	Length	Density	Quantity	Sub Total
10	Carbon Fiber, 1 Ply	For the Body Left Inlet, Composite (Resine included)	$ 200.00	0.264	kg	60%	Fiber weight ratio	Area of the ply	0.418	0.0004	1580	1	$ 52.84
20	Glass Fiber, 1 Ply	For the Body Left Inlet, Composite (Resine included)	$ 100.00	0.368	kg	60%	Fiber weight ratio	Area of the ply	0.418	0.0004	2200	1	$ 36.78
30	Carbon Fiber, 1 Ply	For the Body Left Inlet, Composite (Resine included)	$ 200.00	0.264	kg	60%	Fiber weight ratio	Area of the ply	0.418	0.0004	1580	1	$ 52.84
40	Glass Fiber, 1 Ply	For the Body Left Inlet, Composite (Resine included)	$ 100.00	0.368	kg	60%	Fiber weight ratio	Area of the ply	0.418	0.0004	2200	1	$ 36.78
												Sub Total	**$ 179.24**

ItemOrder	Process	Use	UnitCost	Unit	Quantity	Multiplier	Mult. Val.	Sub Total
10	Lamination, Manual	Lamination of 4 plys	$ 35.00	m²	0.418	Repeat 4	4	$ 58.52
20	Resin Application, Manual	For the 4 plys	$ 5.00	m²	0.418	Repeat 4	4	$ 8.36
30	Cure, Room Temperature	Curing at room temperature	$ 10.00	m²	0.418		1	$ 4.18
40	Drilled holes < 25,4 mm dia.	For fasteners	$ 0.35	hole	1	Repeat 8	8	$ 2.80
50	Non metallic cutting > 76,2 mm	Boundary shaping	$ 1.40	cut	6	Material - Composite	2	$ 16.80
							Sub Total	**$ 90.66**

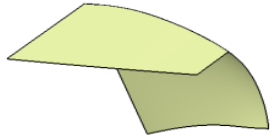

ItemOrder	Fastener	Use	UnitCost	Size1	Unit1	Size2	Unit2	Quantity	Sub Total
10	Nutsert	Fix top of both inlets	$ 0.22	6	mm			2	$ 0.45
20	Bolt, Grade 8.8 (SAE 5)	Fix top of both inlets	$ 0.04	6	mm	15	mm	2	$ 0.07
30	Washer, Grade 8.8 (SAE 5)	For M6 bolts to fix top of both inlets	$ 0.01	6	mm			2	$ 0.02
40	Bolt, Grade 8.8 (SAE 5)	Fix bottom of both inlets	$ 0.03	5	mm	15	mm	12	$ 0.31
50	Nut, Grade 8.8 (SAE 5)	Fix bottom of both inlets	$ 0.02	5	mm			12	$ 0.29
60	Washer, Grade 8.8 (SAE 5)	For M5 bolts to fix bottom of both inlets	$ 0.01	5	mm			12	$ 0.12
								Sub Total	**$ 1.26**

ItemOrder	Tooling	Use	UnitCost	Unit	Quantity	PVF	FracIncld	Sub Total
10	Lamination	Lamination - Mold Tool	$ 20,000.00	m²	1.672	3000	4	$ 2.79
							Sub Total	**$ 2.79**

University	École Centrale de Lyon		Back to BOM	**Car #**	81	**Part Cost**	$ 317.22
System	Frame & Body	**FileLink1**				**Qty**	2
Assembly	Body	**FileLink2**		**FileLink1**			
Part	Body Plates	**FileLink3**		**FileLink2**		**Extended Cost**	$ 634.44
P/N Base	FR 07004			**FileLink3**			
Suffix	AA						
Details	To cover one side of the vehicule						

ItemOrder	Material	Use	UnitCost	Size1	Unit1	Size2	Unit2	Area Name	Area	Length	Density	Quantity	Sub Total
10	Carbon Fiber, 1 Ply	Composite	$ 200.00	0.207	kg			Area of the ply	0.517			2	$ 82.80
20	Aramid (Kevlar) Fiber, 1 Ply	Composite	$ 150.00	0.207	kg			Area of the ply	0.517			1	$ 31.05
												Sub Total	**$ 113.85**

ItemOrder	Process	Use	UnitCost	Unit	Quantity	Multiplier	Mult. Val.	Sub Total
10	Cut (scissors, knife)	Cutting of the 3 plys	$ 0.06	cm	387	Repeat 3	3	$ 69.66
20	Lamination, Manual	Lamination of the 3 plys	$ 35.00	m²	0.517	Repeat 3	3	$ 54.29
30	Resin application, Manual	Resin application on the 3 plys	$ 5.00	m²	0.517	Repeat 3	3	$ 7.76
40	Cure, Room Temperature	Curing	$ 10.00	m²	0.517		1	$ 5.17
							Sub Total	**$ 136.87**

ItemOrder	Fastener	Use	UnitCost	Size1	Unit1	Size2	Unit2	Quantity	Sub Total
10	Pin Quick Release	Fix Body Front to frame on its mounts	$ 16.56	8	mm	40	mm	4	$ 66.24
								Sub Total	**$ 66.24**

ItemOrder	Tooling	Use	UnitCost	Unit	Quantity	PVF	FracIncld	Sub Total
10	Lamination - Flat Panel Tool	Mold for plates	$ 1,500.00	m²	0.5170	3000	1	$ 0.26
							Sub Total	**$ 0.26**

University	École Centrale de Lyon		Back to BOM	**Car #**	81	**Part Cost**	$ 0.64
System	Frame & Body	Drawing :	FileLink1			**Qty**	8
Assembly	Body		**FileLink2**	**FileLink1**			
Part	Front Body and Top Body Inlet Mounts		**FileLink3**	**FileLink2**		**Extended Cost**	$ 5.09
P/N Base	FR 07005			**FileLink3**			
Suffix	AA						
Details	8 mounts to fix the Body Front and both Inlets to the frame						

ItemOrder	Material	Use	UnitCost	Size1	Unit1	Size2	Unit2	Area Name	Area	Length	Density	Quantity	Sub Total
10	Steel, Mild	Raw material for a mount	$ 2.25	0.021	kg						7850	1	$ 0.05
												Sub Total	**$ 0.05**

ItemOrder	Process	Use	UnitCost	Unit	Quantity	Multiplier	Mult. Val.	Sub Total
10	Machining Setup, Install and remove	Setup the first rectangulat plate for laser cut	$ 1.30	unit	1	8 parts cut from a single machine setup	0.125	$ 0.16
20	Laser Cut	Cut the external shape and the hole	$ 0.01	cm	14.22	Material - Steel	3	$ 0.43
							Sub Total	**$ 0.59**

ISO 2768 mK

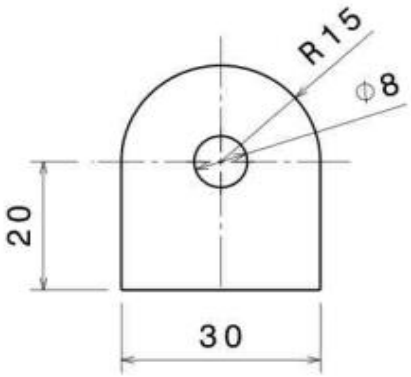

Vue de face
Échelle: 1:1

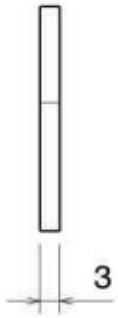

Vue de gauche
Échelle: 1:1

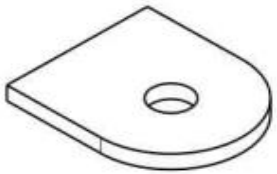

Vue isométrique
Échelle: 1:1

Taille A4		Ecurie Piston Sport Auto
Dessiné par Hugo Stride	Date 29/11/2016	Désignation: Chappes Carrosserie
Coordonnées hstrideg@ec-lyon.fr 07 70 42 77 18		Quantité 8 / Matériau acier S235 / Version 1.0
Plan vérifié par JVN		Echelle 1:1 / Plan: 17M_C_009_CHAPES / Feuille 1/1

University	École Centrale de Lyon		Back to BOM	**Car #**	11	**Part Cost**	$ 0.93
System	Frame & Body	**FileLink1**				**Qty**	6
Assembly	Body	**FileLink2**		**FileLink1**			
Part	Bottom Body Inlet Mounts	**FileLink3**		**FileLink2**		**Extended Cost**	$ 5.58
P/N Base	FR 07006			**FileLink3**			
Suffix	AA						
Details	6 mounts to fix both Inlets to the Undertray						

ItemOrder	Material	Use	UnitCost	Size1	Unit1	Size2	Unit2	Area Name	Area	Length	Density	Quantity	Sub Total
10	Steel, Mild	Raw material for a mount	$ 2.25	0.016	kg				0.0014	0.0015	7850	1	$ 0.04
												Sub Total	**$ 0.04**

ItemOrder	Process	Use	UnitCost	Unit	Quantity	Multiplier	Mult. Val.	Sub Total
10	Machining Setup, Install and remove	Setup the first rectangulat plate for Waterjet cutting	$ 1.30	unit	1	6 parts cut from a single machine setup	0.17	$ 0.22
20	Laser Cut	Cut the external shape and the hole	$ 0.01	cm	14.22	Material - Steel	3	$ 0.43
30	Sheet metal bends	Bend to obtain final mount	$ 0.25	bend	1		1	$ 0.25
							Sub Total	**$ 0.89**

Ecurie Piston Sport Auto
CAR #81
ÉCOLE
CENTRALE LYON
ELECTRICAL

University	Ecole Centrale de Lyon	Back to BOM	**Car #**	81	**Asm Cost** $ 204.12
System	Electrical				**Qty** 1
Assembly	Monitoring System		**FileLink1**		
P/N Base	EL A0001		**FileLink2**		**Extended Cost** $ 204.12
Suffix	AA		**FileLink3**		
Details	Driver information, data aquisition and storage system				

ItemOrder	Part	Part Cost	Quantity	Sub Total
10	Dashboard	$ 109.86	1	$ 109.86
20	Tabs for Dashboard	$ 0.90	3	$ 2.71
			Sub Total	**$ 112.57**

ItemOrder	Material	Use	UnitCost	Size1	Unit1	Size2	Unit2	Area Name	Area	Length	Density	Quantity	Sub Total
10	Switch, Toggle	Power (on-off)	$ 1.00									1	$ 1.00
20	Switch, Toggle	Manual fan power	$ 1.00									1	$ 1.00
30	Switch, Toggle	2nd Map switch	$ 1.00									1	$ 1.00
40	Switch, Toggle	2nd Interface LCD	$ 1.00									1	$ 1.00
50	Switch, Toggle	2nd Interface LCD	$ 1.00									1	$ 1.00
60	Switch, Toggle	Activate traction control	$ 1.00									1	$ 1.00
70	Switch, Pushbutton	Engine start	$ 1.00									1	$ 1.00
80	Switch, Pushbutton	Launch control	$ 1.00									1	$ 1.00
90	Switch, Kill	Cockpit master switch	$ 3.00									1	$ 3.00
100	Lamp, LED	Dashboard indicators and shiftlight	$ 0.50									4	$ 2.00
110	Display, LCD (for Student Built Elect. Only), Area	LCD on Dashboard	$ 30.25	5.5	cm	4.4		rectangular area				1	$ 30.25
120	Heat Shrink tubing	secure connection	$ 0.50	1	m							1	$ 0.50
130	Connector, Single Wire	for every connection on the dashboard	$ 0.05		unit							18	$ 0.90
140	Paint	Paint the tabs	$ 10.00	1.27E-03	m^2							1.27E-03	$ 0.01
												Sub Total	**$ 44.66**

ItemOrder	Process	Use	UnitCost	Unit	Quantity	Multiplier	Mult. Val.	Sub Total
10	Weld	Weld tabs on chassis	$ 0.15	cm	3.6			$ 0.54
20	Aerosol apply	Paint the tabs	$ 5.25	m^2	1.27E-03			$ 0.01
30	Assemble, 1kg, Loose	Assemble Dashboard on tabs	$ 0.06	unit	3			$ 0.18
40	Hand - Start only	Bolt the Dashboard to the tabs	$ 0.12	unit	3			$ 0.36
50	Ratchet <= 6,35mm	Fasten the Dashboard	$ 0.50	unit	3			$ 1.50
60	Reaction Tool <= 6,35mm	For the nuts of the Dashboard	$ 0.25	unit	3			$ 0.75
70	Ratchet <= 6,35mm	Fasten the LCD plate	$ 0.50	unit	4			$ 2.00
80	Reaction Tool <= 6,35mm	For the nuts of the LCD	$ 0.25	unit	4			$ 1.00
90	Cut wires	For the switchs and LED	$ 0.08	cm	26			$ 2.08
100	Attach Wire, Solder wire, not bent	Solder wires in button and LED	$ 0.52	unit	52			$ 27.08
110	Strip Wire	For connector on switches	$ 0.08	unit	18			$ 1.44
120	Connector Assembly, crimp	For connector on switches	$ 0.36	contact	18			$ 6.48
130	Heat Shrink Tube	For connector on switches	$ 0.15	cm	1			$ 0.15
140	Hand, Loose <= 6.35 mm	Fasten every switch & LED	$ 0.15	unit	12			$ 1.80
150	Hand, Loose <= 6.35 mm	Fasten cockpit master switch to Dashboard	$ 0.25	unit	1			$ 0.25
							Sub Total	**$ 45.62**

ItemOrder	Fastener	Use	UnitCost	Size1	Unit1	Size2	Unit2	Quantity	Sub Total
10	Bolt, Grade 8.8 (SAE 5)	Bolts to fix the Dash panel	$ 0.03	4	mm	25	mm	3	$ 0.09
20	Nut, Grade 8.8 (SAE 5)	Nuts to fix the Dash panel	$ 0.02	4	mm			3	$ 0.06
10	Bolt, Grade 8.8 (SAE 5)	Bolts to fix the LCD	$ 0.01	3	mm	15	mm	4	$ 0.04
20	Nut, Grade 8.8 (SAE 5)	Nuts to fix the LCD	$ 0.02	2	mm			4	$ 0.08
								Sub Total	**$ 0.27**

ItemOrder	Tooling	Use	UnitCost	Unit	Quantity	PVF	FractionIncluded	Sub Total
10	Welds - Welding fixture	Material to weld the tabs	$ 500.00	point	6	3000	1	$ 1.00
							Sub Total	**$ 1.00**

University	Ecole Centrale de Lyon		Back to BOM	**Car #**	81	**Part Cost**	$ 109.86
System	Electrical	**FileLink1**				**Qty**	1
Assembly	Monitoring System	**FileLink2**		**FileLink1**			
Part	Dashboard	**FileLink3**		**FileLink2**		**Extended Cost**	$ 109.86
P/N Base	EL 01001			**FileLink3**			
Suffix	AA						
Details	Custom made carbon dashboard						

ItemOrder	Material	Use	UnitCost	Size1	Unit1	Size2	Unit2	Area Name	Area	Length	Density	Quantity	Sub Total
10	Carbon Fiber, 1 Ply	Composite dashboard	$ 200.00	0.190	kg							2	$ 76.00
20	Glass Fiber, 1 Ply	Composite dashboard	$ 100.00	0.023	kg							1	$ 2.30
30	Structural Foam	Composite dashboard	$ 125.00	0.009	kg							1	$ 1.13
												Sub Total	**$ 79.43**

ItemOrder	Process	Use	UnitCost	Unit	Quantity	Multiplier	Mult. Val.	Sub Total
10	Cut (scissors, knife)	Carbon Fiber and Glass Fiber cutting	$ 0.06	cm	396			$ 23.76
20	Lamination, Manual	Lamination of the plys	$ 35.00	m²	0.042			$ 1.47
30	Resin application, Manual	Resin application on the plys	$ 5.00	m²	0.042			$ 0.21
40	Vacuum Form		$ 10.00	m²	0.042			$ 0.42
50	Cure, Room Temperature	Curing	$ 10.00	m²	0.042			$ 0.42
60	Machining Setup, Install and remove	Setup for dashboard cuting	$ 1.30	Unit	1			$ 1.30
70	Waterjet Cut	Cutting the outter profile and the holes	$ 0.01	cm	178			$ 1.78
80	Drilled holes <25,4mm dia.	Drilling fasteners holes	$ 0.35	hole	3			$ 1.05
								$ 30.41

ItemOrder	Tooling	Use	UnitCost	Unit	Quantity	PVF	FracIncld	Sub Total
10	Lamination - Flat Panel Tool	Mold for all plates	$ 1,500.00	m²	0.042	3000	1	$ 0.02
							Sub Total	**$ 0.02**

University	Ecole Centrale de Lyon		Back to BOM	**Car #**	81	**Part Cost**	$	0.90
System	Electrical	**FileLink1**				**Qty**		3
Assembly	Monitoring System	**FileLink2**		**FileLink1**				
Part	Tabs for Dashboard	**FileLink3**		**FileLink2**		**Extended Cost**	$	2.71
P/N Base	EL 01002			**FileLink3**				
Suffix	AA							
Details								

ItemOrder	Material	Use	UnitCost	Size1	Unit1	Size2	Unit2	Area Name	Area	Length	Density	Quantity	Sub Total
10	Aluminium, Norm	Material for part	$ 4.20	0.001	kg			Rectangular 15x12 mm	1.80E-04	0.002	2712	1	$ 0.00
												Sub Total	**$ 0.00**

ItemOrder	Process	Use	UnitCost	Unit	Quantity	Multiplier	Mult. Val.	Sub Total
10	Machining Setup, Install and remove	Setup for laser cut	$ 1.30		1	3 parts cut from a single machine setup	0.33	$ 0.65
20	Laser Cut		$ 0.01	cm	6.23	Material - Steel	3	$ 0.25
							Sub Total	**$ 0.90**

EL 01002

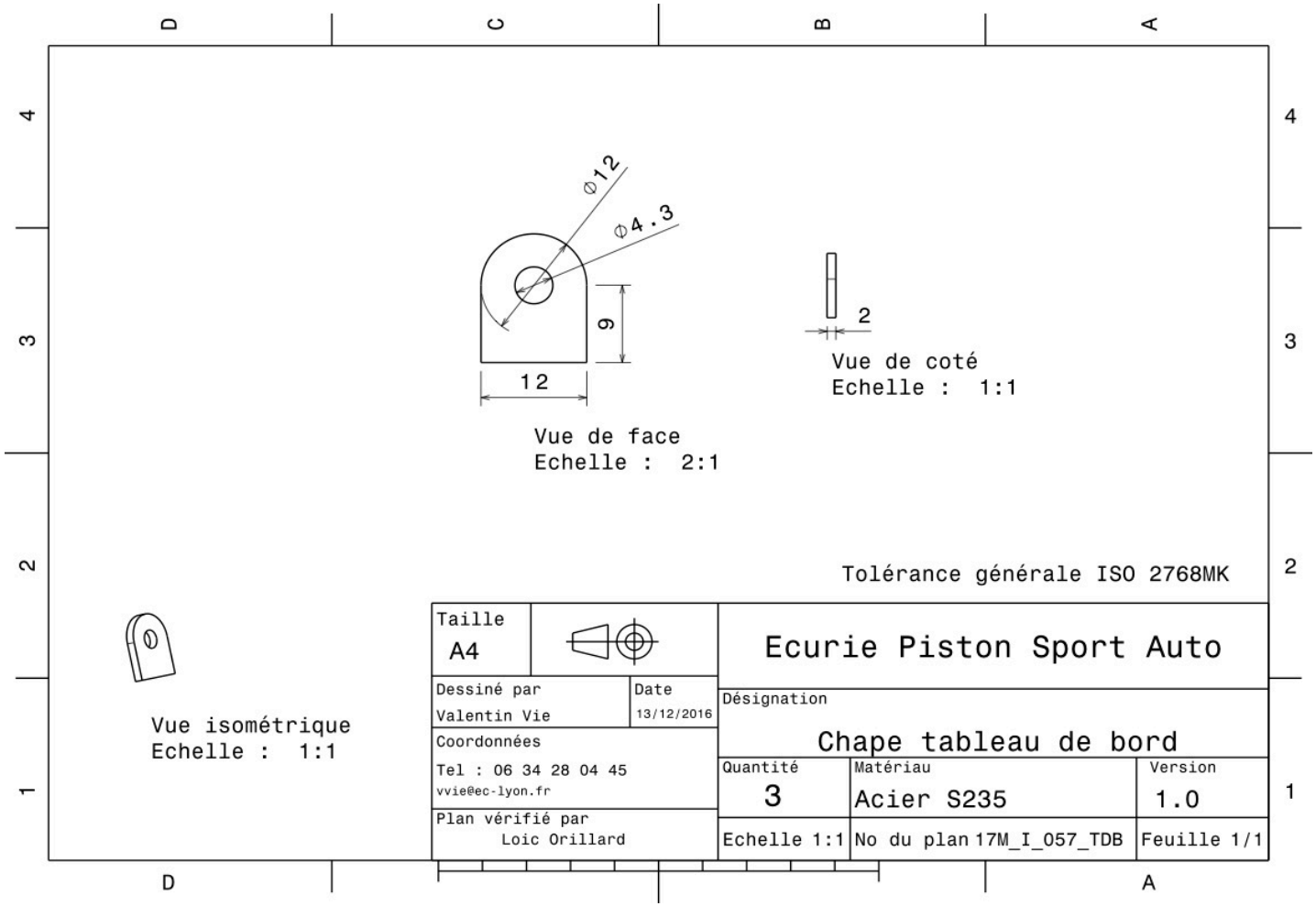
Ø12
Ø4.3
9
12
Vue de face
Echelle : 2:1
2
Vue de coté
Echelle : 1:1
Tolérance générale ISO 2768MK
Vue isométrique
Echelle : 1:1
Taille
A4
Ecurie Piston Sport Auto
Dessiné par
Valentin Vie
Date
13/12/2016
Désignation
Chape tableau de bord
Coordonnées
Tel : 06 34 28 04 45
vvie@ec-lyon.fr
Quantité
3
Matériau
Acier S235
Version
1.0
Plan vérifié par
Loic Orillard
Echelle 1:1
No du plan 17M_I_057_TDB
Feuille 1/1

University	Ecole Centrale de Lyon	Back to BOM	**Car #**	81	**Asm Cost** $ 106.09
System	Electrical				**Qty** 1
Assembly	Battery Assembly		**FileLink1**		
P/N Base	EL A0002		**FileLink2**		**Extended Cost** $ 106.09
Suffix	AA		**FileLink3**		
Details	Li-Ion battery assembly				

ItemOrder	Part	Part Cost	Quantity	Sub Total
10	Main battery mount	$ 4.83	1	$ 4.83
20	Side battery mount	$ 3.66	2	$ 7.31
30	Front tab	$ 2.09	1	$ 2.09
40	Rear tab	$ 2.06	1	$ 2.06
			Sub Total	**$ 16.29**

ItemOrder	Material	Use	UnitCost	Size1	Unit1	Size2	Unit2	Area Name	Area	Length	Density	Quantity	Sub Total
10	Battery, Advanced Chemistry (Li-Ion)	Starter battery LiFePo4	$ 65.00	1.3	kg							1	$ 84.50
20	Paint	Tabs painting	$ 10.00	0.003	m²							0.003	$ 0.03
												Sub Total	**$ 84.53**

ItemOrder	Process	Use	UnitCost	Unit	Quantity	Multiplier	Mult. Val.	Sub Total
10	Weld	Tabs welding on frame	$ 0.15	cm	4		1	$ 0.60
20	Aerosol apply	Tabs painting	$ 5.25	m²	0.003		1	$ 0.02
30	Assemble, 1kg, Loose	Side to main battery mount	$ 0.06	Unit	2		1	$ 0.12
40	Riveting	Side mounts riveting to main mount	$ 0.25	Unit	8		1	$ 2.00
50	Assemble, 1kg, Line-on-Line	Insert Battery in Braket	$ 0.13	Unit	1		1	$ 0.13
60	Assemble, 1kg, Loose	Insert Battery mount on tab	$ 0.06	Unit	1		1	$ 0.06
70	Ratchet <= 6.35 mm	Insert Battery mount on tab	$ 0.50	Unit	2		1	$ 1.00
80	Reaction tool <= 6.35 mm	Insert Battery mount on tab	$ 0.25	Unit	2		1	$ 0.50
							Sub Total	**$ 4.43**

ItemOrder	Fastener	Use	UnitCost	Size1	Unit1	Size2	Unit2	Quantity	Sub Total
10	Bolt,Grade 8.8 (SAE 5)	M6 bolt for Battery mount on tab	$ 0.04	6	mm	20	mm	2	$ 0.08
20	Nut, Grade 8.8 (SAE 5)	M6 bolt for Battery mount on tab	$ 0.03	6	mm			2	$ 0.06
30	Washer, Grade 8.8 (SAE 5)	M6 bolt for Battery mount on tab	$ 0.01	6	mm			4	$ 0.04
								Sub Total	**$ 0.18**

ItemOrder	Tooling	Use	UnitCost	Unit	Quantity	PVF	FractionIncluded	Sub Total
10	Welds - Welding Fixture	Tabs welding on frame	$ 500.00	point	4	3000	1	$ 0.67
							Sub Total	**$ 0.67**

University	Ecole Centrale de Lyon		Back to BOM	**Car #**	81	**Part Cost**	$ 4.83
System	Electrical	Drawing :	FileLink1			**Qty**	1
Assembly	Battery Assembly		**FileLink2**	**FileLink1**			
Part	Main battery mount		**FileLink3**	**FileLink2**		**Extended Cost**	$ 4.83
P/N Base	EL 02001			**FileLink3**			
Suffix	AA						
Details	To carry the battery						

ItemOrder	Material	Use	UnitCost	Size1	Unit1	Size2	Unit2	Area Name	Area	Length	Density	Quantity	Sub Total
10	Aluminium, Normal		$ 4.20	0.231	kg			Rectangular area, 265x161 mm	4.27E-02	0.002	2712	1	$ 0.97
												Sub Total	**$ 0.97**

ItemOrder	Process	Use	UnitCost	Unit	Quantity	Multiplier	Mult. Val.	Sub Total
10	Machining Setup, Install and Remove		$ 1.30	unit	1		1	$ 1.30
20	Laser cut	Profile of the part	$ 0.01	cm	185.68		1	$ 1.86
30	Sheet metal bends		$ 0.35	bend	2		1	$ 0.70
							Sub Total	**$ 3.86**

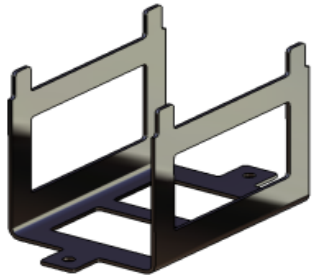

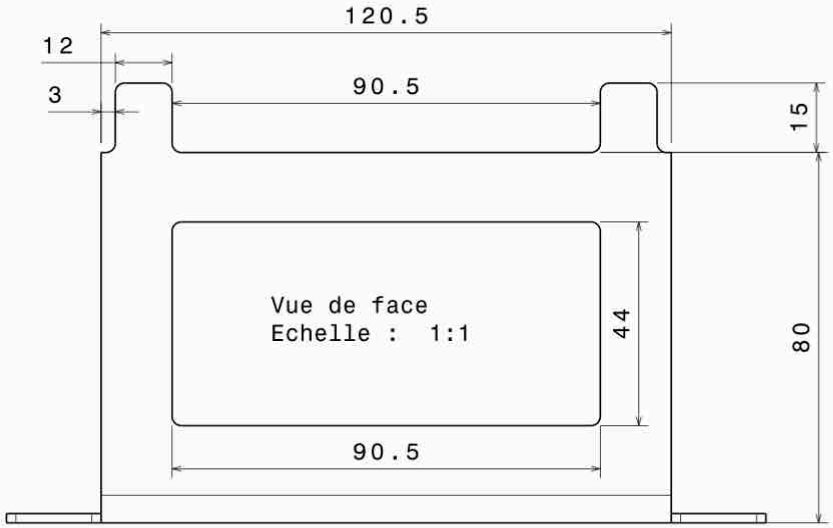

Vue de face
Echelle : 1:1

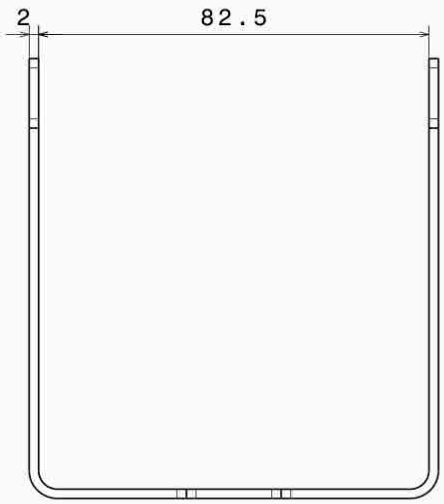

Vue de gauche
Echelle : 1:1

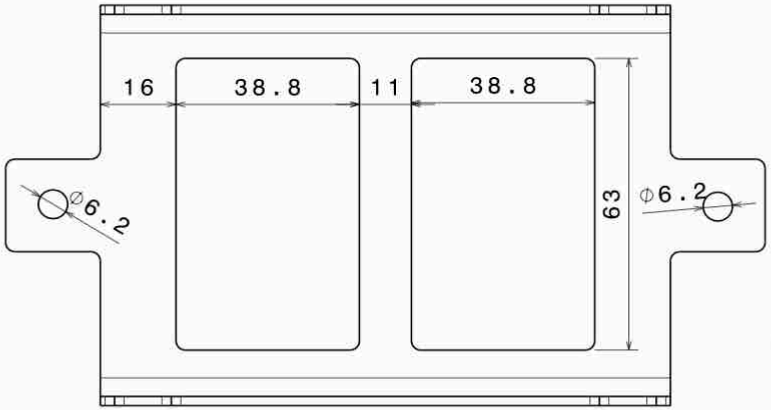

Vue de dessus
Echelle : 1:1

Rayon de pliage laissé libre au fabriquant
Rayon de congé laissé libre au fabriquant
Tolérances générales ISO 2768 - mk

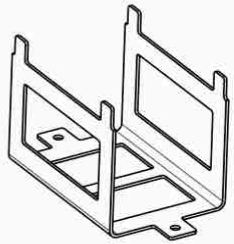

Vue isométrique
Echelle : 1:3

Taille A3		Ecurie Piston Sport Auto
Dessiné par Loïc Orillard	Date 13/12/2016	Désignation Batterie support principal
Coordonnées loic.orillard@ecl15.ec-lyon.fr 06 82 21 03 97		Quantité 1 / Matériau Aluminium 2017 / Version 1.0
Plan vérifié par AGU		Echelle 1:1 / Numéro du plan 17M_M_064_BAT / Feuille 1/1

University	Ecole Centrale de Lyon		Back to BOM	**Car #**	81	**Part Cost**	$ 3.66
System	Electrical	Drawing :	FileLink1			**Qty**	2
Assembly	Battery Assembly		**FileLink2**	**FileLink1**			
Part	Side battery mount		**FileLink3**	**FileLink2**		**Extended Cost**	$ 7.31
P/N Base	EL 02002			**FileLink3**			
Suffix	AA						
Details	To carry the battery						

ItemOrder	Material	Use	UnitCost	Size1	Unit1	Size2	Unit2	Area Name	Area	Length	Density	Quantity	Sub Total
10	Aluminium, Normal		$ 4.20	0.061	kg			Rectangular area, 112x100 mm	1.12E-02	0.002	2712	1	$ 0.26
												Sub Total	**$ 0.26**

ItemOrder	Process	Use	UnitCost	Unit	Quantity	Multiplier	Mult. Val.	Sub Total
10	Machining Setup, Install and Remove		$ 1.30	unit	1		1	$ 1.30
20	Laser cut	Profile of the part	$ 0.01	cm	70.02		1	$ 0.70
30	Sheet metal bends		$ 0.35	bend	4		1	$ 1.40
							Sub Total	**$ 3.40**

Vue de Droite
Echelle : 1:1

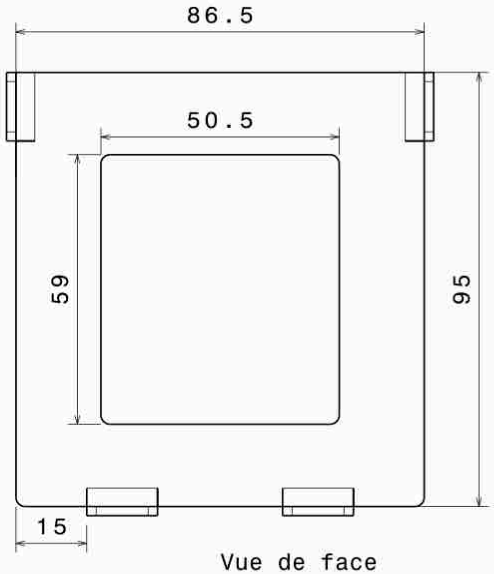

Vue de face
Echelle : 1:1

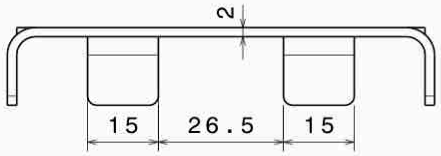

Vue de face
Echelle : 1:1

Rayons de congés laissés libre au fabriquant
Rayons de pliures laissés libre au fabriquant
Tolérances générales ISO 2768 mk

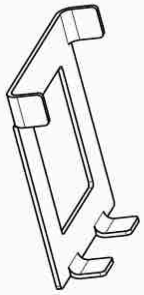

Vue isométrique
Echelle : 1:2

Taille A3		Ecurie Piston Sport Auto	
Dessiné par Loïc Orillard	Date 18/12/2016	Désignation Support latéral batterie	
Coordonnées loic.orillard@ecl15.ec-lyon.fr tel: 06 82 21 03 97		Quantité 2	Matériau Aluminium 2017 / Version 1.0
Plan vérifié par AGU		Echelle 1:1	Numéro du plan 17M_M_065_BAT / Feuille 1/1

University	Ecole Centrale de Lyon		Back to BOM	**Car #**	81	**Part Cost**	$ 2.09
System	Electrical	Drawing :	FileLink1			**Qty**	1
Assembly	Battery Assembly		**FileLink2**	**FileLink1**			
Part	Front tab		**FileLink3**	**FileLink2**		**Extended Cost**	$ 2.09
P/N Base	EL 02003			**FileLink3**			
Suffix	AA						
Details							

ItemOrder	Material	Use	UnitCost	Size1	Unit1	Size2	Unit2	Area Name	Area	Length	Density	Quantity	Sub Total
10	Steel, Mild		$ 2.25	0.019	kg			Rectangular area, 61x20 mm	1.22E-03	0.002	7850	1	$ 0.04
												Sub Total	**$ 0.04**

ItemOrder	Process	Use	UnitCost	Unit	Quantity	Multiplier	Mult. Val.	Sub Total
10	Machining Setup, Install and Remove		$ 1.30	unit	1		1	$ 1.30
20	Laser cut	Profile of the part	$ 0.01	cm	24.81	Material - Steel	3	$ 0.74
							Sub Total	**$ 2.04**

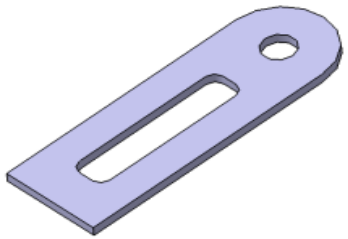

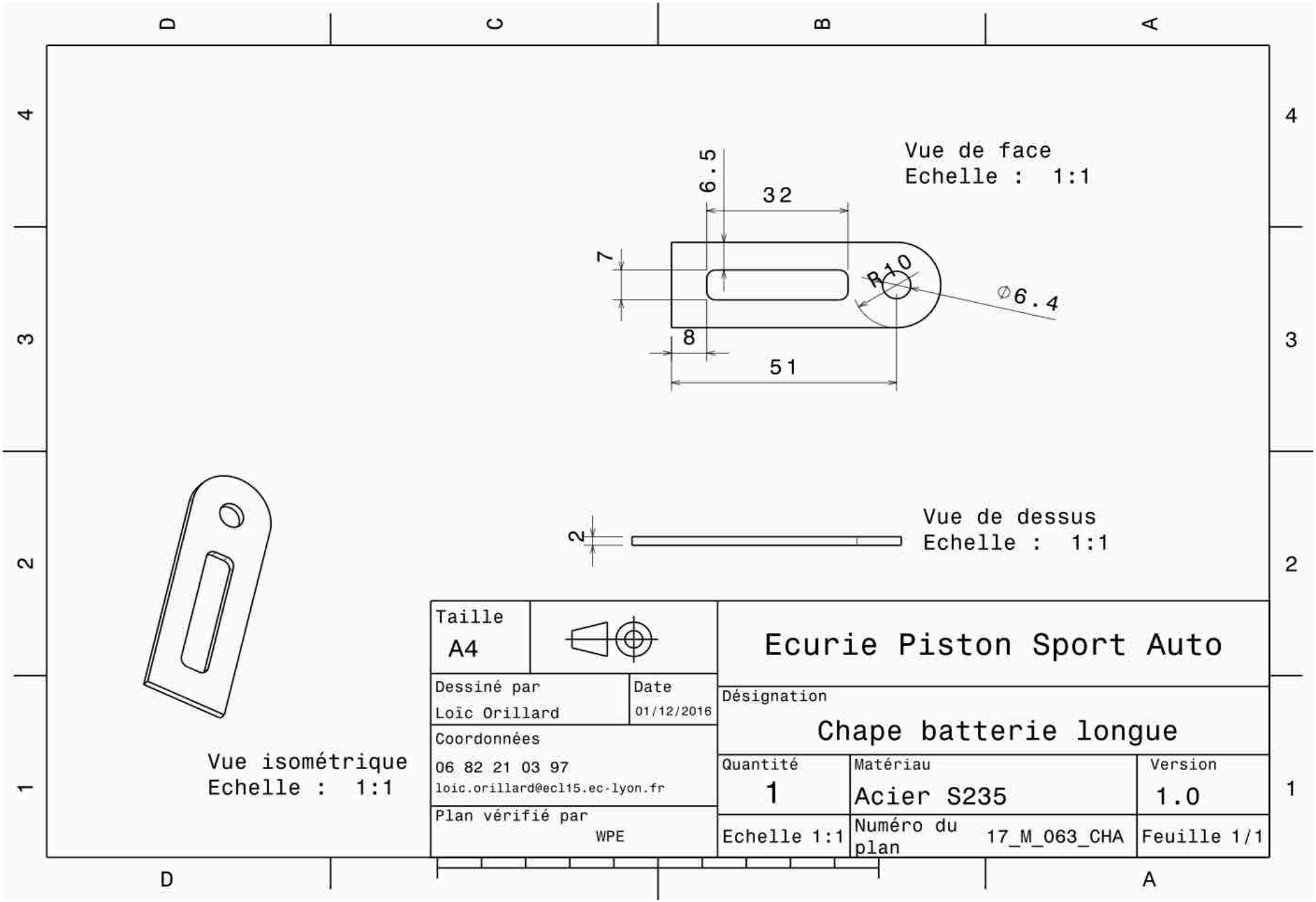
Vue de face
Echelle : 1:1
6.5
32
7
R10
⌀6.4
8
51
Vue de dessus
Echelle : 1:1
2
Vue isométrique
Echelle : 1:1
Taille
A4
Ecurie Piston Sport Auto
Dessiné par
Loïc Orillard
Date
01/12/2016
Désignation
Chape batterie longue
Coordonnées
06 82 21 03 97
loic.orillard@ecl15.ec-lyon.fr
Quantité
1
Matériau
Acier S235
Version
1.0
Plan vérifié par
WPE
Echelle 1:1
Numéro du plan
17_M_063_CHA
Feuille 1/1

University	Ecole Centrale de Lyon		Back to BOM	**Car #**	81	**Part Cost**	$ 2.06
System	Electrical	**FileLink1**				**Qty**	1
Assembly	Battery Assembly	**FileLink2**		**FileLink1**			
Part	Rear tab	**FileLink3**		**FileLink2**		**Extended Cost**	$ 2.06
P/N Base	EL 02004			**FileLink3**			
Suffix	AA						
Details							

ItemOrder	Material	Use	UnitCost	Size1	Unit1	Size2	Unit2	Area Name	Area	Length	Density	Quantity	Sub Total
10	Steel, Mild		$ 2.25	0.007	kg			Rectangular area, 22x20 mm	4.40E-04	0.002	7850	1	$ 0.02
												Sub Total	**$ 0.02**

ItemOrder	Process	Use	UnitCost	Unit	Quantity	Multiplier	Mult. Val.	Sub Total
10	Machining Setup, Install and Remove		$ 1.30	unit	1		1	$ 1.30
20	Laser cut	Profile of the part	$ 0.01	cm	24.81	Material - Steel	3	$ 0.74
							Sub Total	**$ 2.04**

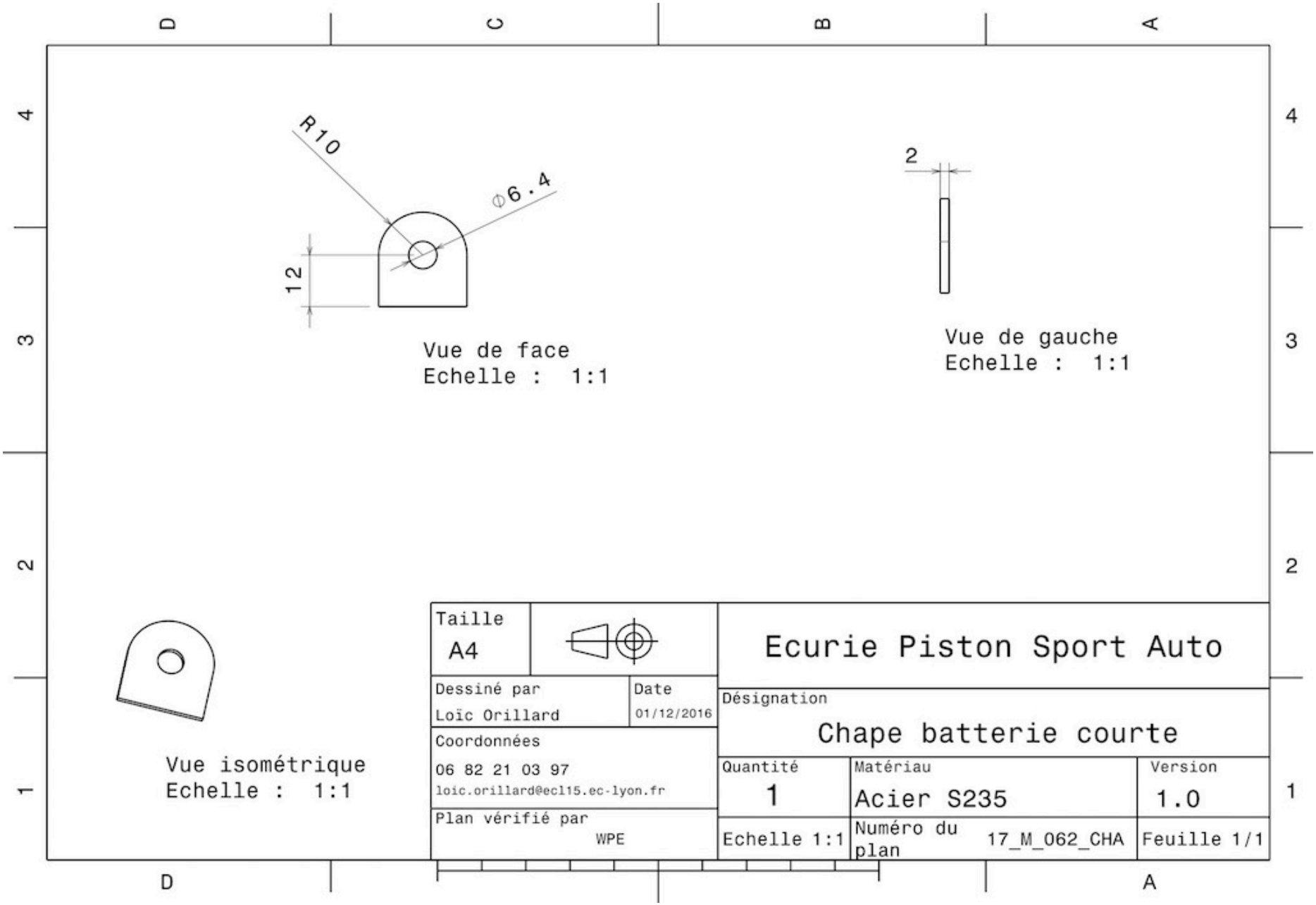
R10
⌀6.4
12
Vue de face
Echelle : 1:1
2
Vue de gauche
Echelle : 1:1
Vue isométrique
Echelle : 1:1
Taille
A4
Dessiné par
Loïc Orillard
Date
01/12/2016
Coordonnées
06 82 21 03 97
loic.orillard@ecl15.ec-lyon.fr
Plan vérifié par
WPE
Ecurie Piston Sport Auto
Désignation
Chape batterie courte
Quantité
1
Matériau
Acier S235
Version
1.0
Echelle 1:1
Numéro du plan
17_M_062_CHA
Feuille 1/1

University	Ecole Cenrale de Lyon	Back to BOM	**Car #**	81	**Asm Cost** $ 45.57
System	Electrical				**Qty** 1
Assembly	Shifting System Wiring Harness		**FileLink1**		
P/N Base	EL A0003		**FileLink2**		**Extended Cost** $ 45.57
Suffix	AA		**FileLink3**		
Details	Gear shifting paddles harness				

ItemOrder	Part	Part Cost	Quantity	Sub Total
10	Paddles connector mount	$ 1.88	1	$ 1.88
			Sub Total	**$ 1.88**

ItemOrder	Material	Use	UnitCost	Size1	Unit1	Size2	Unit2	Area Name	Area	Length	Density	Quantity	Sub Total
10	Wire, Control		$ 1.00	13.4	m							1	$ 13.40
20	Connector, Aerospace Quality	Paddles connector	$ 1.00	4	pin(s)							1	$ 1.00
30	Connector, Computer Type		$ 1.00	6	pin(s)							1	$ 1.00
40	Connector, Computer Type		$ 1.00	8	pin(s)							1	$ 1.00
50	Connector, Single Wire	Connectors for buttons	$ 0.05	1	wire							4	$ 0.20
60	Heat Shrink Tubing		$ 0.50	0.5	m							1	$ 0.25
												Sub Total	**$ 16.85**

ItemOrder	Process	Use	UnitCost	Unit	Quantity	Multiplier	Mult. Val.	Sub Total
10	Cut wire		$ 0.08	Unit	20			$ 1.60
20	Strip wire		$ 0.08	Unit	19			$ 1.52
30	Attach Wire, Solder wire, not bent		$ 0.52	Unit	12			$ 6.24
40	Crimp wire		$ 0.17	Unit	6			$ 1.02
50	Connector assembly, crimp		$ 0.36	contact	6			$ 2.16
60	Connector assembly, solder		$ 0.24	contact	17			$ 4.08
70	Shrink tube		$ 0.15	cm	50			$ 7.50
80	Wire dressing		$ 1.00	m	2.2			$ 2.20
90	Connector Install, Circular Screw, Thread		$ 0.24	Unit	1			$ 0.24
100	Connector Install, Square, Friction		$ 0.14	Unit	2			$ 0.28
							Sub Total	**$ 26.84**

University	Ecole Centrale de Lyon		Back to BOM	**Car #**	81	**Part Cost**	$ 1.88
System	Electrical	**FileLink1**				**Qty**	1
Assembly	Shifting System Wiring Harness	**FileLink2**		**FileLink1**			
Part	Paddles connector mount	**FileLink3**		**FileLink2**		**Extended Cost**	$ 1.88
P/N Base	EL 03001			**FileLink3**			
Suffix	AA						
Details							

ItemOrder	Material	Use	UnitCost	Size1	Unit1	Size2	Unit2	Area Name	Area	Length	Density	Quantity	Sub Total
10	Aluminium, Normal	Material for part	$ 4.20	0.009	kg			Rectangular 40x80 mm	3.20E-03	0.001	2712	1	$ 0.04
												Sub Total	**$ 0.04**

ItemOrder	Process	Use	UnitCost	Unit	Quantity	Multiplier	Mult. Val.	Sub Total
10	Machining Setup, Install and remove	Setup for laser cut	$ 1.30		1		1	$ 1.30
20	Laser Cut		$ 0.01	cm	29.4		1	$ 0.29
30	Sheet metal bends		$ 0.25	bend	1		1	$ 0.25
							Sub Total	**$ 1.84**

University	Ecole Centrale de Lyon	Back to BOM	**Car #**	81	**Asm Cost** $ 1,247.29
System	Electrical				**Qty** 1
Assembly	Rear Fire Wall Instruments and Wires		**FileLink1**		
P/N Base	EL A0004		**FileLink2**		**Extended Cost** $ 1,247.29
Suffix	AA		**FileLink3**		
Details	Engine Instruments & Wire Harness				

ItemOrder	Part	Part Cost	Quantity	Sub Total
10	DTA Short tab	$ 0.94	2	$ 1.87
20	DTA Long tab	$ 2.33	1	$ 2.33
30	DTA Mount	$ 2.45	1	$ 2.45
40	Ground tab	$ 0.52	2	$ 1.05
			Sub Total	**$ 7.71**

ItemOrder	Material	Use	UnitCost	Size1	Unit1	Size2	Unit2	Area Name	Area	Length	Density	Quantity	Sub Total
10	ECU, DTA, S80 Pro	DTA	$ 850.00		unit							1	$ 850.00
20	Sensor, Angular Position	TPS for ECU's control	$ 4.00		unit							1	$ 4.00
30	Sensor, Two State Position	Oil pressure switch	$ 4.00		unit							1	$ 4.00
40	Sensor, Two State Position	Neutral Switch	$ 4.00		unit							1	$ 4.00
50	Sensor, Two State Position	clutch switch	$ 4.00		unit							1	$ 4.00
60	Sensor, Thermocouple	ECT Sensor	$ 8.00		unit							1	$ 8.00
70	Sensor, Wide Band Air Fuel Raito	Wideband lambda sensor	$ 35.00		unit							1	$ 35.00
80	Connector, OEM Quality	connector with 3 wires for TPS	$ 0.50		wire							3	$ 1.50
90	Connector, OEM Quality	connector with 2 wires for Oil Pressure Switch	$ 0.50		wire							2	$ 1.00
100	Connector, OEM Quality	connector with 2 wires for Neutral Switch	$ 0.50		wire							2	$ 1.00
110	Connector, OEM Quality	connector with 3 wires for ECT Sensor	$ 0.50		wire							3	$ 1.50
120	Connector, OEM Quality	connector with 2*3 wires for lambda sensor	$ 0.50		wire							6	$ 3.00
120	Connector, OEM Quality	connector with 2 wires for ignition pulse sensor	$ 0.50		wire							2	$ 1.00
130	Connector, OEM Quality	connector with 2 wires for cam pulse generator	$ 0.50		wire							2	$ 1.00
140	Connector, OEM Quality	2*34 ECU connector	$ 0.50		wire							68	$ 34.00
150	Connector, OEM Quality	2 wires Fan connector	$ 0.50		wire							2	$ 1.00
160	Connector, OEM Quality	4*2 connectors (one for each ignition coil)	$ 0.50		wire							8	$ 4.00
170	Connector, OEM Quality	4*2 connectors (one for each fuel injector)	$ 0.50		wire							2	$ 1.00
180	Connector, High Power, > 2 Amps	connector with 2 wires for link between regulator and battery	$ 2.00		pin(s)							3	$ 6.00
190	Connector, High Power, > 2 Amps	connector with 3 wires for link between alternator and regulator	$ 2.00		pin(s)							2	$ 4.00
200	Connector, High Power, > 2 Amps	connector with 1 wire to connect starter motor	$ 2.00		pin(s)							1	$ 2.00
210	Connector, Single Wire	connect fuel pump	$ 0.05		wire							2	$ 0.10
220	Connector, Single Wire	connect wires with the frame's ground	$ 0.05		wire							3	$ 0.15
230	Relay, Power	relay command for engine stop, fan, fuel pump, starter motor	$ 4.00		unit							4	$ 16.00
240	Fuse Box	fuse housing	$ 0.30		pin(s)							36	$ 10.80
250	Fuse, Power	fuse to protect many elements of the circuit	$ 1.00		unit							12	$ 12.00
260	Wire, Signal	Wires for sensors and connection with "Foward wiring"	$ 1.00		m							35	$ 35.00
270	Wire Sleeving, Split	Wire routing and protection	$ 0.50		m							3	$ 1.50
280	Heat Shrink Tubing	Protect mechanically soldered connections	$ 0.50		m							4	$ 2.00
290	Wire, Power	Miscellaneous wires for power transfer	$ 3.00		m							10	$ 30.00
300	Paint	Tabs painting	$ 10.00		m^2							7.95E-03	$ 0.08
												Sub Total	**$ 1,078.63**

ItemOrder	Process	Use	UnitCost	Unit	Quantity	Multiplier	Mult. Val.	Sub Total
10	Weld	Tabs welding on frame	$ 0.15	cm	11.6			$ 1.74
20	Aerosol apply	Tabs painting	$ 5.25	m^2	7.95E-03			$ 0.04
30	Assemble, 1kg, Loose	Assemble DTA Mount on DTA Tabs	$ 0.06	unit	1			$ 0.06
40	Ratchet <= 6.35 mm	Assemble DTA Mount on DTA Tabs	$ 0.50	unit	3			$ 1.50
50	Reaction Tool <= 6.35 mm	Assemble DTA Mount on DTA Tabs	$ 0.25	unit	3			$ 0.75
60	Cut wire	Cut sensor wires to appropriate lenght	$ 0.08	unit	22			$ 1.83
70	Strip Wire	Strip wire ends	$ 0.08	unit	44			$ 3.67
80	Cut wire	Cut power and control wires to appropriate lenght	$ 0.08	unit	62			$ 5.17
90	Strip Wire	Strip wire ends	$ 0.08	unit	124			$ 10.33
100	Cut wire	Cut sensor wires to appropriate lenght	$ 0.08	unit	22			$ 1.83
110	Crimp Wire	All single-wire connectors	$ 0.17	unit	10			$ 1.67
120	Connector Assembley, Crimp	Crimp all other connectors terminal	$ 0.36	contacts	130			$ 46.80
130	Cut (scissors, knife)	Cut heat shrink tubing	$ 0.06	cm	1	repeat 50	50	$ 3.00

140	Shrink Tube	Cover all soldered section	$ 0.15	cm	450			$ 67.50
150	Wire Dressing (Install and route)	Install and route wiring harness	$ 1.00	m	3			$ 3.00
160	Insert Bundle Into Tube or Sleeve	Route wiring harness : wires in the tube	$ 0.02	m	3			$ 0.06
170	Taping Wire Bundle	Tape large wire bundles	$ 0.04	cm	20			$ 0.80
180	Install Tie Wrap (Zip Tie, Cable Clamp)	Install and route wiring harness	$ 0.09	unit	20			$ 1.88
190	Assemble, 3 kg, Loose	ECU installation	$ 0.19	unit	1			$ 0.19
200	Ratchet <= 6.35 mm		$ 0.50	unit	2			$ 1.00
210	Reaction Tool <= 6.35 mm		$ 0.25	unit	2			$ 0.50
220	Assemble, 1 kg, Loose	Put regulator redressor in place	$ 0.06	unit	1			$ 0.06
230	Ratchet <= 6.35 mm		$ 0.50	unit	2			$ 1.00
240	Reaction Tool <= 6.35 mm		$ 0.25	unit	2			$ 0.50
250	Assemble, 1 kg, Loose	Put power relay in place	$ 0.06	unit	1			$ 0.06
260	Ratchet <= 6.35 mm		$ 0.50	unit	1			$ 0.50
270	Reaction Tool <= 6.35 mm		$ 0.25	unit	1			$ 0.25
280	Assemble, 1 kg, Loose	Put lambda sensor in place	$ 0.06	unit	1			$ 0.06
290	Ratchet <= 6.35 mm		$ 0.50	unit	2			$ 1.00
300	Reaction Tool <= 6.35 mm		$ 0.25	unit	2			$ 0.50
							Sub Total	**$ 157.25**

ItemOrder	Fastener	Use	UnitCost	Size1	Unit1	Size2	Unit2	Quantity	Sub Total
10	Bolt, Grade 8.8 (SAE 5)	Assemble DTA Mount on DTA Tabs	$ 0.04	6	mm	20	mm	3	$ 0.12
20	Nut, Grade 8.8 (SAE 5)	Assemble DTA Mount on DTA Tabs	$ 0.03	6	mm			3	$ 0.09
30	Washer, Grade 8.8 (SAE 5)	Assemble DTA Mount on DTA Tabs	$ 0.01		unit			6	$ 0.06
40	Bolt, Grade 8.8 (SAE 5)	Regulator redressor	$ 0.01	3	mm	15	mm	2	$ 0.02
50	Nut, Grade 8.8 (SAE 5)	Regulator redressor	$ 0.02	3	mm			2	$ 0.04
60	Washer, Grade 8.8 (SAE 5)	Regulator redressor	$ 0.01		unit			4	$ 0.04
70	Bolt, Grade 8.8 (SAE 5)	Lambda sensor	$ 0.01	3	mm	15	mm	2	$ 0.03
80	Nut, Grade 8.8 (SAE 5)	Lambda sensor	$ 0.02	3	mm			2	$ 0.04
90	Washer, Grade 8.8 (SAE 5)	Lambda sensor	$ 0.01		unit			2	$ 0.03
100	Bolt, Grade 8.8 (SAE 5)	Power relay	$ 0.01	3	mm	15	mm	1	$ 0.01
110	Nut, Grade 8.8 (SAE 5)	Power relay	$ 0.02	3	mm			1	$ 0.02
120	Washer, Grade 8.8 (SAE 5)	Power relay	$ 0.01		unit			2	$ 0.03
130	Bolt, Grade 8.8 (SAE 5)	M3 on ground tab	$ 0.01	3	mm	15	mm	2	$ 0.03
140	Nut, Grade 8.8 (SAE 5)	M3 on ground tab	$ 0.02	3	mm			2	$ 0.04
150	Washer, Grade 8.8 (SAE 5)	M3 on ground tab	$ 0.01		unit			4	$ 0.05
160	Tie Wrap	To wire harness routing	$ 0.04		unit			20	$ 0.80
170	Hook and Loop, Hook Side (Velcro)	To fix ECU DTA on DTA Mount	$ 0.003		cm^2			120	$ 0.36
180	Hook and Loop, Loop Side (Velcro)	To fix ECU DTA on DTA Mount	$ 0.002		cm^2			120	$ 0.24
								Sub Total	**$ 2.04**

ItemOrder	Tooling	Use	UnitCost	Unit	Quantity	PVF	FractionIncluded	Sub Total
10	Welds - Welding fixture	Material to weld the tabs	$ 500.00	point	10	3000	1	$ 1.67
							Sub Total	**$ 1.67**

University	Ecole Centrale de Lyon		Back to BOM	**Car #**	81	**Part Cost**	$ 0.94
System	Electrical	Drawing :	FileLink1			**Qty**	2
Assembly	Rear Fire Wall Instruments and Wires		**FileLink2**	**FileLink1**			
Part	DTA Short tab		**FileLink3**	**FileLink2**		**Extended Cost**	$ 1.87
P/N Base	EL 04001			**FileLink3**			
Suffix	AA						
Details							

ItemOrder	Material	Use	UnitCost	Size1	Unit1	Size2	Unit2	Area Name	Area	Length	Density	Quantity	Sub Total
10	Steel, Mild	Material for part	$ 2.25	0.003	kg			Rectangular 20 x 18 mm	3.60E-04	0.001	7850	1	$ 0.01
												Sub Total	**$ 0.01**

ItemOrder	Process	Use	UnitCost	Unit	Quantity	Multiplier	Mult. Val.	Sub Total
10	Machining Setup, Install and remove	Setup for laser cut	$ 1.30		1	2 parts cut from a single machine setup	0.5	$ 0.65
20	Laser Cut	Tab profile	$ 0.01	cm	9.36	Material - Steel	3	$ 0.28
							Sub Total	**$ 0.93**

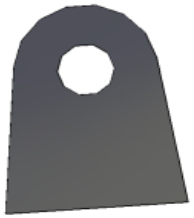

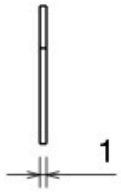

Vue de droite
Echelle : 1:1

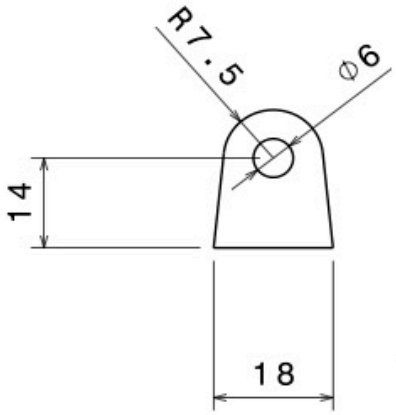

Vue de face
Echelle : 1:1

Vue isométrique
Echelle : 1:1

Tolérances générales ISO 2768 mk
Epaisseur 1mm

Taille A4		Ecurie Piston Sport Auto
Dessiné par Axel Guittonneau	Date 05/12/2016	Désignation Petite chappe suport DTA
Coordonnées axel.guittonneau @ecl16.ec-lyon.fr 06 59 89 07 30		Quantité 2 / Matériau Acier S235 / Version 1.0
Plan vérifié par RFE		Echelle 1:1 / No du plan 17M_I_055_DTA / Feuille 1/1

University	Ecole Centrale de Lyon		Back to BOM	**Car #**	81	**Part Cost**	$ 2.33
System	Electrical	Drawing :	FileLink1			**Qty**	1
Assembly	Rear Fire Wall Instruments and Wires		**FileLink2**	**FileLink1**			
Part	DTA Long tab		**FileLink3**	**FileLink2**		**Extended Cost**	$ 2.33
P/N Base	EL 04002			**FileLink3**			
Suffix	AA						
Details							

ItemOrder	Material	Use	UnitCost	Size1	Unit1	Size2	Unit2	Area Name	Area	Length	Density	Quantity	Sub Total
10	Steel, Mild	Material for part	$ 2.25	0.069	kg			Rectangular 110 x 40 mm	4.40E-03	0.002	7850	1	$ 0.16
												Sub Total	**$ 0.16**

ItemOrder	Process	Use	UnitCost	Unit	Quantity	Multiplier	Mult. Val.	Sub Total
10	Machining Setup, Install and remove	Setup for laser cut	$ 1.30		1		1	$ 1.30
20	Laser Cut	Tab profile	$ 0.01	cm	29.19	Material - Steel	3	$ 0.88
							Sub Total	**$ 2.18**

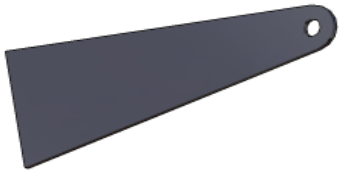

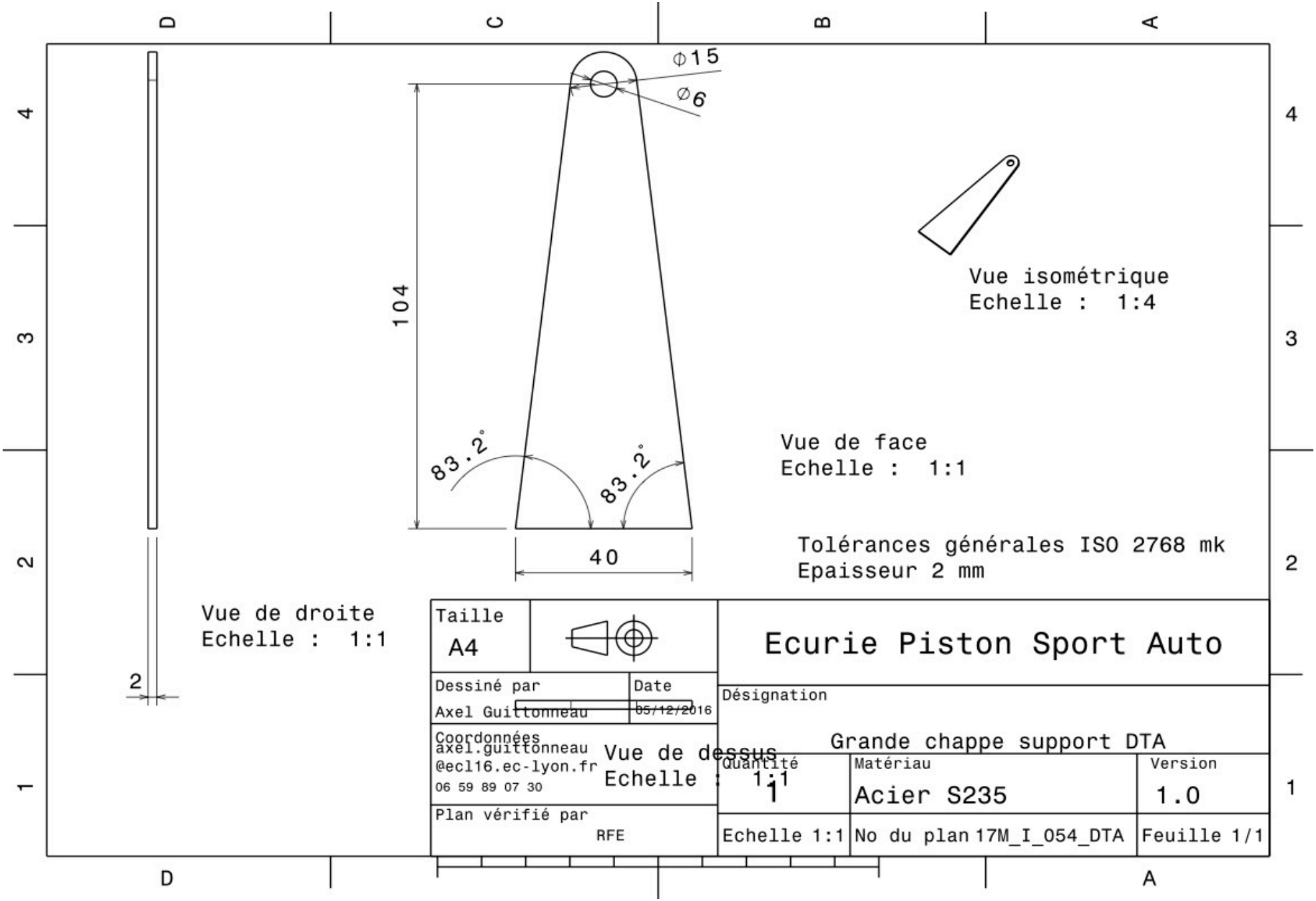
Φ15
Ø6
104
83.2°
83.2°
40
2
Vue isométrique
Echelle : 1:4
Vue de face
Echelle : 1:1
Tolérances générales ISO 2768 mk
Epaisseur 2 mm
Vue de droite
Echelle : 1:1
Vue de dessus
Echelle : 1:1
Taille
A4
Ecurie Piston Sport Auto
Dessiné par
Axel Guittonneau
Date
05/12/2016
Désignation
Grande chappe support DTA
Coordonnées
axel.guittonneau
@ecl16.ec-lyon.fr
06 59 89 07 30
Quantité
1
Matériau
Acier S235
Version
1.0
Plan vérifié par
RFE
Echelle 1:1
No du plan 17M_I_054_DTA
Feuille 1/1

University	Ecole Centrale de Lyon			Back to BOM	**Car #**	81	**Part Cost**	$	2.45
System	Electrical	Drawing :	FileLink1				**Qty**		1
Assembly	Rear Fire Wall Instruments and Wires		**FileLink2**		**FileLink1**				
Part	DTA Mount		**FileLink3**		**FileLink2**		**Extended Cost**	$	2.45
P/N Base	EL 04003				**FileLink3**				
Suffix	AA								
Details									

ItemOrder	Material	Use	UnitCost	Size1	Unit1	Size2	Unit2	Area Name	Area	Length	Density	Quantity	Sub Total
10	Aluminium, Normal	Material for part	$ 4.20	0.086	kg			Rectangular 182x175 mm	3.19E-02	0.001	2712	1	$ 0.36
												Sub Total	**$ 0.36**

ItemOrder	Process	Use	UnitCost	Unit	Quantity	Multiplier	Mult. Val.	Sub Total
10	Machining Setup, Install and remove	Setup for laser cut	$ 1.30		1		1	$ 1.30
20	Laser Cut	Mount profile	$ 0.01	cm	79.01		1	$ 0.79
30	Sheet Metal Bends		$ 0.25	bend	1		1	$ 0.25
							Sub Total	**$ 2.09**

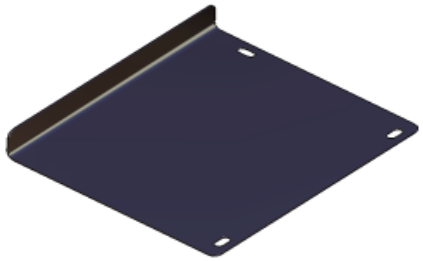

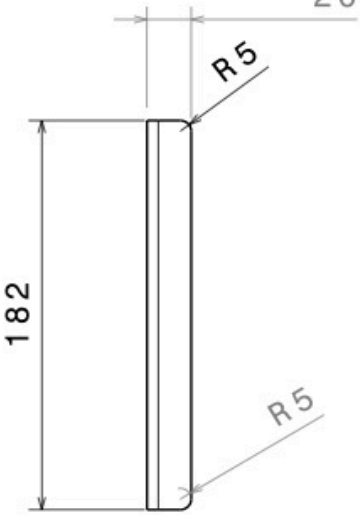

Vue de droite
Echelle : 1:3

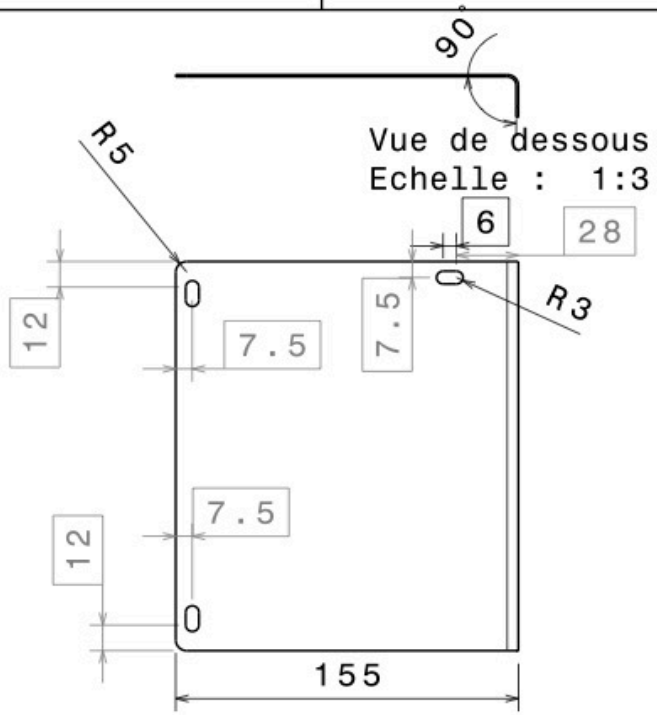

Vue de dessous
Echelle : 1:3

Vue de face
Echelle : 1:3

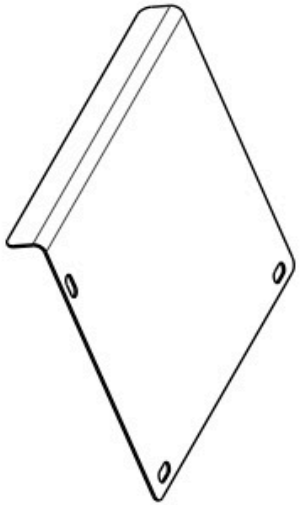

Vue isométrique
Echelle : 1:3

Tolérances générales ISO 2768 mk
Epaisseur 1 mm

Tous les trous oblongs
ont la même géométrie

Rayon de pliure selon le fabriquant

Taille A4		Ecurie Piston Sport Auto
Dessiné par Axel Guittonneau	Date 05/12/2016	Désignation Plaque pliée support DTA
Coordonnées axel.guittonneau @ecl16.ec-lyon.fr 06 59 89 07 30		Quantité 1 / Matériau Alu 2017 T4 / Version 1.0
Plan vérifié par RFE		Echelle 1:1 / No du plan 17M_I_053_DTA / Feuille 1/1

University	Ecole Centrale de Lyon		Back to BOM	**Car #**	81	**Part Cost**	$ 0.52
System	Electrical	Drawing :	FileLink1			**Qty**	2
Assembly	Rear Fire Wall Instruments and Wires		**FileLink2**	**FileLink1**			
Part	Ground tab		**FileLink3**	**FileLink2**		**Extended Cost**	$ 1.05
P/N Base	EL 04004			**FileLink3**			
Suffix	AA						
Details							

ItemOrder	Material	Use	UnitCost	Size1	Unit1	Size2	Unit2	Area Name	Area	Length	Density	Quantity	Sub Total
10	Steel, Mild	Material for part	$ 2.25	0.006	kg			Rectangular 20 x 20 mm	4.00E-04	0.002	7850	1	$ 0.01
												Sub Total	**$ 0.01**

ItemOrder	Process	Use	UnitCost	Unit	Quantity	Multiplier	Mult. Val.	Sub Total
10	Machining Setup, Install and remove	Setup for laser cut	$ 1.30		1	5 parts cut from a single machine setup	0.20	$ 0.26
20	Laser Cut		$ 0.01	cm	8.32	Material - Steel	3	$ 0.25
							Sub Total	**$ 0.51**

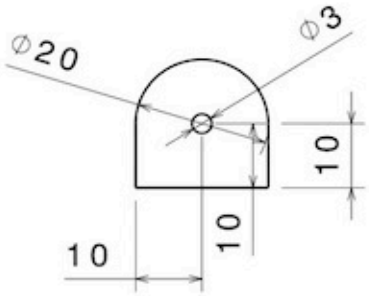

Vue de face
Echelle : 1:1

Vue de gauche
Echelle : 1:1

Vue isométrique
Echelle : 1:1

Taille A4		Ecurie Piston Sport Auto	
Dessiné par Valentin Vie	Date 03/01/2017	Désignation Chape masse	
Coordonnées valentin.vie@ecl15.ec-lyon.fr 06.34.28.04.45		Quantité 10	Matériau Acier S235	Version v1.0
Plan vérifié par AGU		Echelle 1:1	No du plan 17M_I_099_MAS	Feuille 1/1

University	Ecole Centrale de Lyon	Back to BOM	**Car #**	81	**Asm Cost** $ 226.29
System	Electrical				**Qty** 1
Assembly	Forward Fire Wall Wire Harness		**FileLink1**		
P/N Base	EL A0005		**FileLink2**		**Extended Cost** $ 226.29
Suffix	AA		**FileLink3**		
Details					

ItemOrder	Part	Part Cost	Quantity	Sub Total
10	Ground tab	$ 0.52	3	$ 1.57
			Sub Total	**$ 1.57**

ItemOrder	Material	Use	UnitCost	Size1	Unit1	Size2	Unit2	Area Name	Area	Length	Density	Quantity	Sub Total
10	Wire, signal	From firewall to dashboard	$ 1.00	23.5	m							1	$ 23.50
20	Wire, signal	All other dashboard wires	$ 1.00	4	m							1	$ 4.00
30	Wire, signal	Overtravel switch	$ 1.00	2	m							1	$ 2.00
40	Wire, power	For the Dashboard Arduino	$ 3.00	1.2	m							1	$ 3.60
50	Wire, signal	Wheel Speed Sensor wires	$ 1.00	4	m							1	$ 4.00
60	Wire, signal	Clutch switch	$ 1.00	1	m							1	$ 1.00
70	Wire Sleeving, Split	All other wiring	$ 0.50	2.5	m							1	$ 1.25
80	Connector, aerospace quality	Firewall connector	$ 1.00	8	pins							3	$ 24.00
90	Connector, aerospace quality	Gearshifter connector	$ 1.00	3	pins							1	$ 3.00
100	Connector, Single Wire	ground rings	$ 0.05	1	unit							6	$ 0.30
110	Heat Shrink Tubing	To cover all soldered connections	$ 0.50	1.8	m							1	$ 0.90
120	Chassis Control Module, +Dashboard	Front card to collect data for LCD communication	$ 20.00		unit								$ 20.00
130	Sensor, Hall Effect	Wheel Speed Sensor, hall effect	$ 4.00	1	unit							2	$ 8.00
140	Connector, aerospace quality	connector for chassis control module box	$ 1.00	8	pins							2	$ 16.00
150	Chassis Control Module, Baseline Enclosure	enclosure for the front card	$ 25.00		unit							1	$ 25.00
												Sub Total	**$ 136.55**

ItemOrder	Process	Use	UnitCost	Unit	Quantity	Multiplier	Mult. Val.	Sub Total
10	Weld	Tabs welding on frame	$ 0.15	cm	6		1	$ 0.90
20	Cut wire	Cut all wires to correct lengths	$ 0.08	unit	46		1	$ 3.68
30	Strip wire	Strip wire ends	$ 0.08	unit	92		1	$ 7.36
40	Crimp Wire	All quick-connect terminals	$ 0.17	unit	14		1	$ 2.38
50	Crimp Wire	Ground rings	$ 0.17	unit	6		1	$ 1.02
60	Attach Wire, Quick connect terminal	All quick-connect terminals	$ 0.10	unit	14		1	$ 1.40
70	Attach Wire, Ring	Ground rings	$ 0.48	unit	6		1	$ 2.88
80	Ratchet <= 6.35 mm	Bolt for ground rings	$ 0.50	unit	1		2	$ 1.00
90	Reaction tool <= 6.35 mm	Nut for ground rings	$ 0.25	unit	1		2	$ 0.50
100	Connector Assembley, Crimp	overtravel switch connector - 2 pins	$ 0.36	contacts	2	repeat 2	2	$ 1.44
110	Attach Wire, Solder wire, straight	overtravel switch pins	$ 0.52	unit	2		1	$ 1.04
120	assemble connector -square, latch	overtravel switch connector	$ 0.17	unit	1		1	$ 0.17
130	Connector Assembley, Crimp	gear indicator - 3 pins	$ 0.36	contacts	3		1	$ 1.08
140	assemble connector -square, latch	gear indicator connector	$ 0.17	unit	1		1	$ 0.17
150	Connector Assembley, Solder	front firewall connectors (male)	$ 0.24	contacts	18		1	$ 4.32

160	Connector Install, Circular, Screw Thread	Plug wires into firewall	$ 0.24	unit	3		1	$ 0.72
170	Connector Assembley, Solder	Gearshifter connector - 3 pins	$ 0.24	contacts	3		1	$ 0.72
180	Connector Install, Circular, friction	Gearshifter connector	$ 0.14	unit	1		1	$ 0.14
190	Attach Wire, Solder wire, not bent	All wire-to-wire connections	$ 0.52	unit	23		1	$ 11.96
200	Cut (scissors,knife)	cut the Heat Shrink tubing to lengh	$ 0.06	cm	1	repeat 46	46	$ 2.76
210	Shrink Tube	Cover wire for gear paddles	$ 0.15	cm	70		1	$ 10.50
220	Shrink Tube	Cover all soldered connections	$ 0.15	cm	180		1	$ 27.00
230	Wire Dressing (Install and route)	Install and route wiring harness	$ 1.00	m	3.1		1	$ 3.10
240	Insert Bundle Into Tube or Sleeve	Install and route wiring harness	$ 0.02	m	3		1	$ 0.06
250	Install Tie Wrap	Install and route wiring harness	$ 0.09	unit	12		1	$ 1.08
							Sub Total	**$ 86.48**

ItemOrder	Fastener	Use	UnitCost	Size1	Unit1	Size2	Unit2	Quantity	Sub Total
10	Bolt, Grade 8.8 (SAE 5)	Bolt ground rings to ground tabs	$ 0.04	6	mm	16	mm	3	$ 0.12
20	Nut, Grade 8.8 (SAE 5)	Nut ground rings to ground tabs	$ 0.03	6	mm			3	$ 0.09
30	Tie Wrap		$ 0.04					12	$ 0.48
								Sub Total	**$ 0.69**

ItemOrder	Tooling	Use	UnitCost	Unit	Quantity	PVF	FractionIncluded	Sub Total
10	Welds-Welding fixture	Tabs welding on frame	$ 500.00	point	6	3000	1	$ 1.00
							Sub Total	**$ 1.00**

University	Ecole Centrale de Lyon		Back to BOM	**Car #**	81	**Part Cost**	$ 0.52
System	Electrical	Drawing :	FileLink1			**Qty**	3
Assembly	Forward Fire Wall Wire Harness		**FileLink2**	**FileLink1**			
Part	Ground tab		**FileLink3**	**FileLink2**		**Extended Cost**	$ 1.57
P/N Base	EL 05001			**FileLink3**			
Suffix	AA						
Details	Same as EL 04004						

ItemOrder	Material	Use	UnitCost	Size1	Unit1	Size2	Unit2	Area Name	Area	Length	Density	Quantity	Sub Total
10	Steel, Mild	Material for part	$ 2.25	0.006	kg			Rectangular 20 x 20 mm	4.00E-04	0.002	7850	1	$ 0.01
												Sub Total	**$ 0.01**

ItemOrder	Process	Use	UnitCost	Unit	Quantity	Multiplier	Mult. Val.	Sub Total
10	Machining Setup, Install and remove	Setup for laser cut	$ 1.30		1	5 parts cut from a single machine setup	0.20	$ 0.26
20	Laser Cut		$ 0.01	cm	8.32	Material - Steel	3	$ 0.25
							Sub Total	**$ 0.51**

Ecurie Piston Sport Auto

CAR #81

ÉCOLE CENTRALE LYON

Miscellaneous, Finish & Assembly

University	Ecole Centrale de Lyon	Back to BOM	**Car #**	81	**Asm Cost** $ 99.01
System	Miscellaneous, Finish and Assembly				**Qty** 1
Assembly	Fire Wall		**FileLink1**		
P/N Base	MS A0001		**FileLink2**		**Extended Cost** $ 99.01
Suffix	AA		**FileLink3**		
Details	Aluminium firewall				

ItemOrder	Part	Part Cost	Quantity	Sub Total
10	Firewall main plate	$ 8.35	1	$ 8.35
20	Firewall rear plate	$ 3.75	1	$ 3.75
30	Firewall rear top middle plate	$ 3.32	1	$ 3.32
40	Firewall rear top right plate	$ 2.18	1	$ 2.18
50	Firewall rear top left plate	$ 2.18	1	$ 2.18
60	Firewall top right plate	$ 4.07	1	$ 4.07
70	Firewall top left plate	$ 4.07	1	$ 4.07
80	Firewall middle right plate	$ 4.22	1	$ 4.22
90	Firewall middle left plate	$ 4.22	1	$ 4.22
100	Firewall bottom right plate	$ 4.35	1	$ 4.35
110	Firewall bottom left plate	$ 4.35	1	$ 4.35
120	Tab top	$ 1.00	2	$ 2.00
130	Tab bottom	$ 1.03	2	$ 2.06
140	Tab lateral	$ 0.33	20	$ 6.51
			Sub Total	**$ 55.64**

ItemOrder	Material	Use	UnitCost	Size1	Unit1	Size2	Unit2	Area Name	Area	Length	Density	Quantity	Sub Total
10	Paint	Steel tabs painting	$ 10.00	0.08	m^2							0.08	$ 0.80
												Sub Total	**$ 0.80**

ItemOrder	Process	Use	UnitCost	Unit	Quantity	Multiplier	Mult. Val.	Sub Total
10	Weld	Tabs welding on frame	$ 0.15	cm	38		1	$ 5.70
20	Aerosol apply	Tabs painting	$ 5.25	m^2	0.08		1	$ 0.42
30	Drilled holes < 25.4 mm dia.	Holes of the plates	$ 0.35	hole	8		1	$ 2.80
40	Assemble, 1kg, Line-on-line	Top plates installation	$ 0.13	unit	4		1	$ 0.50
50	Assemble, 1kg, Line-on-line	Right and left plates installation	$ 0.13	unit	6		1	$ 0.75
60	Assemble, 3kg, Line-on-Line	Main plate installation	$ 0.38	unit	1		1.25	$ 0.48
70	Ratchet <= 6.35 mm	Screwing all the plates	$ 0.50	unit	24		1	$ 12.00
80	Reaction Tool <= 6.35 mm	Screwing all the plates	$ 0.25	unit	24		1	$ 6.00
90	Tape	Firewall sealing with aluminium tape	$ 0.80	m	5		1	$ 4.00
							Sub Total	**$ 32.65**

ItemOrder	Fastener	Use	UnitCost	Size1	Unit1	Size2	Unit2	Quantity	Sub Total
10	Bolt, Grade 8.8 (SAE 5)	Firewall main plate fixing	$ 0.05	6	mm	25	mm	24	$ 1.20
20	Washer, Grade 8.8 (SAE 5)	Firewall main plate fixing	$ 0.01	6	mm			48	$ 0.48
30	Nut, Grade 8.8 (SAE 5)	Firewall other than main plate fixing	$ 0.01		mm			24	$ 0.24
								Sub Total	**$ 1.92**

ItemOrder	Tooling	Use	UnitCost	Unit	Quantity	PVF	FractionIncluded	Sub Total
10	Welds-Welding fixture	Tabs welding on frame	$ 500.00	point	48	3000	1	$ 8.00
							Sub Total	**$ 8.00**

University	Ecole Centrale de Lyon		Back to BOM	**Car #**	81	**Part Cost**	$ 8.35
System	Miscellaneous, Finish and Assen	Drawing :	FileLink1			**Qty**	1
Assembly	Fire Wall		**FileLink2**	**FileLink1**			
Part	Firewall main plate		**FileLink3**	**FileLink2**		**Extended Cost**	$ 8.35
P/N Base	MS 01001			**FileLink3**			
Suffix	AA						
Details	Main plate of the firewall						

ItemOrder	Material	Use	UnitCost	Size1	Unit1	Size2	Unit2	Area Name	Area	Length	Density	Quantity	Sub Total
10	Aluminium, Normal	Material for part	$ 4.20	0.932	kg			Rectangular 635 mm x 541 mm	3.44E-01	0.001	2712	1	$ 3.91
												Sub Total	**$ 3.91**

ItemOrder	Process	Use	UnitCost	Unit	Quantity	Multiplier	Mult. Val.	Sub Total
10	Machining Setup, Install and remove	Setup for laser cut	$ 1.30		1			$ 1.30
20	Laser Cut		$ 0.01	cm	263.24	Material - Aluminium	1	$ 2.63
30	Sheet metal bends		$ 0.25	bend	2			$ 0.50
							Sub Total	**$ 4.43**

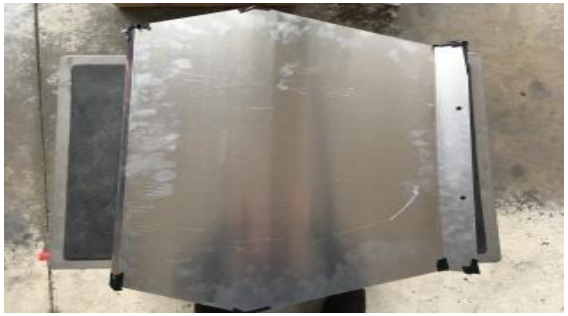

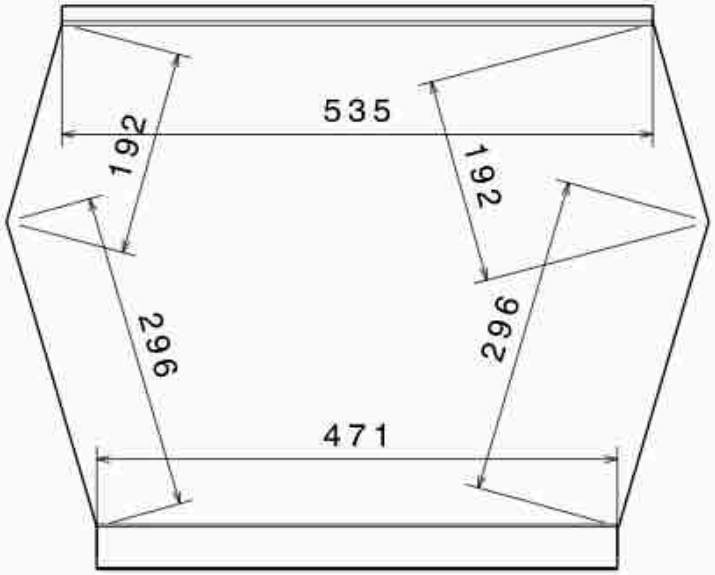

Vue de face
Echelle : 1:6

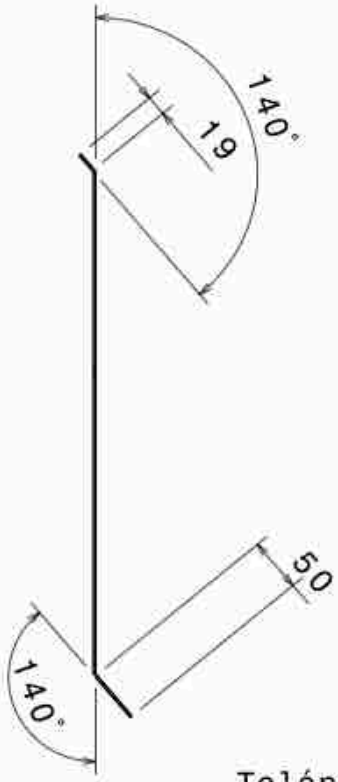

Rayon de courbure libre

Epaisseur : 1mm

Tolérances générales : ISO 2768mK

Taille A4		Ecurie Piston Sport Auto	
Dessiné par William PIERRÉ	Date 28/02/2017	Désignation Parfeu arriere bas	
Coordonnées Tel : 06 88 06 96 96 Mail : wpierre@ec-lyon.fr		Quantité 1	Matériau alu 2017	Version 1.0
Plan vérifié par LOD		Echelle 1:6	N° 17M_I_107_WPE	Feuille 1/1

University	Ecole Centrale de Lyon		Back to BOM	**Car #**	81	**Part Cost**	$ 3.75
System	Miscellaneous, Finish and Assen	Drawing :	FileLink1			**Qty**	1
Assembly	Fire Wall	**FileLink2**		**FileLink1**			
Part	Firewall rear plate	**FileLink3**		**FileLink2**		**Extended Cost**	$ 3.75
P/N Base	MS 01002			**FileLink3**			
Suffix	AA						
Details							

ItemOrder	Material	Use	UnitCost	Size1	Unit1	Size2	Unit2	Area Name	Area	Length	Density	Quantity	Sub Total
10	Aluminium, Normal	Material for part	$ 4.20	0.223	kg			Rectangular 535 mm x 154 mm	8.24E-02	0.001	2712	1	$ 0.94
												Sub Total	**$ 0.94**

ItemOrder	Process	Use	UnitCost	Unit	Quantity	Multiplier	Mult. Val.	Sub Total
10	Machining Setup, Install and remove	Setup for laser cut	$ 1.30		1			$ 1.30
20	Laser Cut		$ 0.01	cm	151.58	Material - Aluminium	1	$ 1.52
							Sub Total	**$ 2.82**

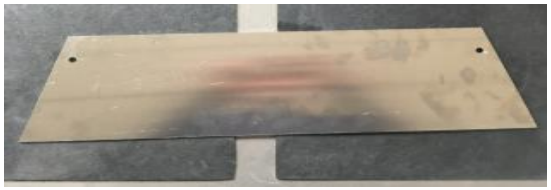

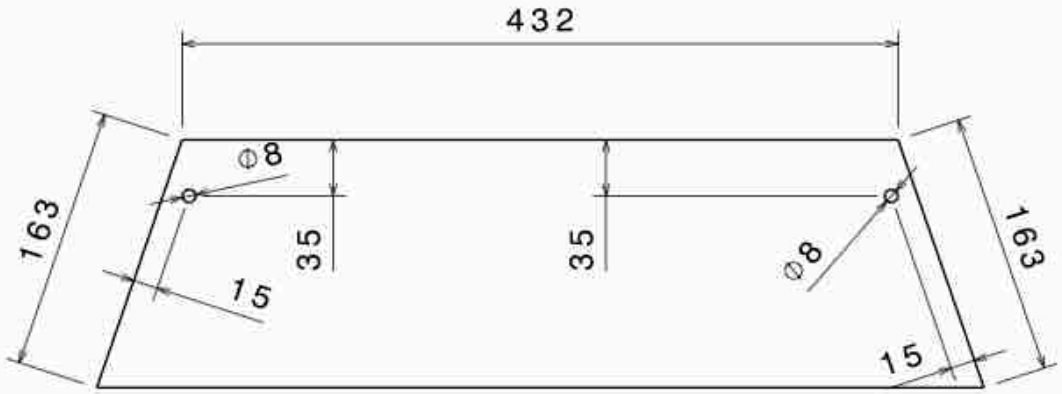

Vue de face
Echelle : 1:4

535

Epaisseur : 1mm

Tolérances générales : ISO 2768mK

Taille A4		Ecurie Piston Sport Auto
Dessiné par William PIERRÉ	Date 28/02/2017	Désignation Parfeu arriere top
Coordonnées Tel : 06 88 06 96 96 Mail : wpierre@ec-lyon.fr		Quantité 1 / Matériau alu 2017 / Version 1.0
Plan vérifié par LOD		Echelle 1:4 / N° 17M_I_106_WPE / Feuille 1/1

University	Ecole Centrale de Lyon			Back to BOM	**Car #**	81	**Part Cost**	$	3.32
System	Miscellaneous, Finish & Assembly	Drawing :	FileLink1				**Qty**		1
Assembly	Fire Wall		**FileLink2**		**FileLink1**				
Part	Firewall rear top middle plate		**FileLink3**		**FileLink2**		**Extended Cost**	$	3.32
P/N Base	MS 01003				**FileLink3**				
Suffix	AA								
Details									

ItemOrder	Material	Use	UnitCost	Size1	Unit1	Size2	Unit2	Area Name	Area	Length	Density	Quantity	Sub Total
10	Aluminium, Normal	Material for part	$ 4.20	0.196	kg			Rectangular 168 mm x 430 mm	7.22E-02	0.001	2712	1	$ 0.82
												Sub Total	**$ 0.82**

ItemOrder	Process	Use	UnitCost	Unit	Quantity	Multiplier	Mult. Val.	Sub Total
10	Machining Setup, Install and remove	Setup for laser cut	$ 1.30		1			$ 1.30
20	Laser Cut		$ 0.01	cm	70	Material - Aluminium	1	$ 0.70
30	Sheet metal bends		$ 0.25	bend	2			$ 0.50
							Sub Total	**$ 2.50**

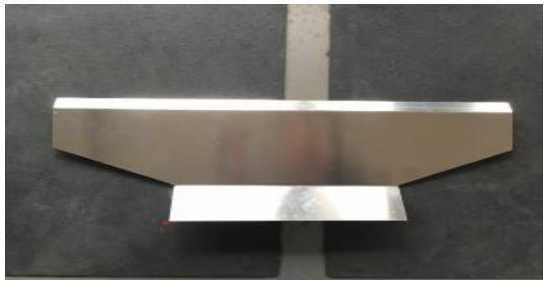

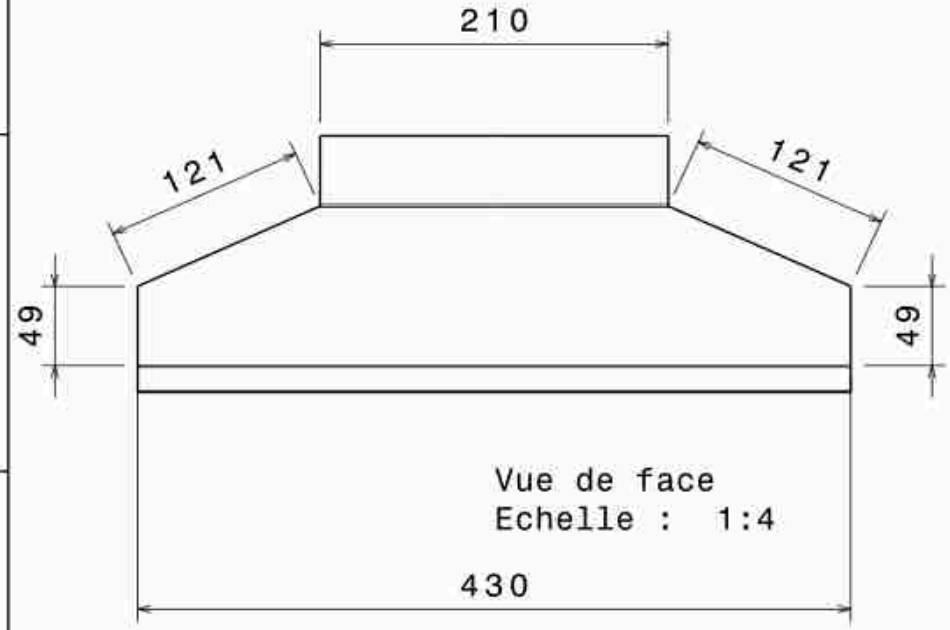

Vue de face
Echelle : 1:4

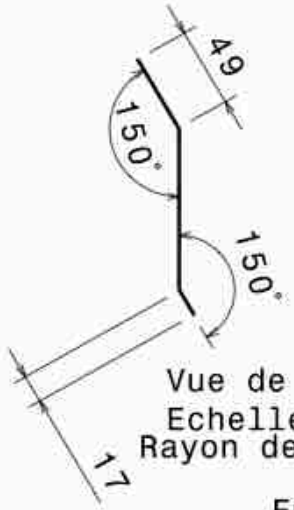

Vue de gauche
Echelle : 1:4
Rayon de courbure libre

Epaisseur : 1mm

Tolérances générales : ISO 2768mK

Taille A4		Ecurie Piston Sport Auto
Dessiné par William PIERRÉ	Date 28/02/2017	Désignation Parfeu arriere tête
Coordonnées Tel : 06 88 06 96 96 Mail : wpierre@ec-lyon.fr		Quantité 1 / Matériau alu 2017 / Version 1.0
Plan vérifié par LOD		Echelle 1:4 / N° 17M_I_108_WPE / Feuille 1/1

University	Ecole Centrale de Lyon		Back to BOM	**Car #**	81	**Part Cost**	$ 2.18
System	Miscellaneous, Finish & Assemb	Drawing :	FileLink1			**Qty**	1
Assembly	Fire Wall		**FileLink2**	**FileLink1**			
Part	Firewall rear top right plate		**FileLink3**	**FileLink2**		**Extended Cost**	$ 2.18
P/N Base	MS 01004			**FileLink3**			
Suffix	AA						
Details							

ItemOrder	Material	Use	UnitCost	Size1	Unit1	Size2	Unit2	Area Name	Area	Length	Density	Quantity	Sub Total
10	Aluminium, Normal	Material for part	$ 4.20	0.047	kg			Rectangular 144 mm x 120 mm	1.73E-02	0.001	2712	1	$ 0.20
												Sub Total	**$ 0.20**

ItemOrder	Process	Use	UnitCost	Unit	Quantity	Multiplier	Mult. Val.	Sub Total
10	Machining Setup, Install and remove	Setup for laser cut	$ 1.30		1			$ 1.30
20	Laser Cut		$ 0.01	cm	43.62	Material - Aluminium	1	$ 0.44
30	Sheet metal bends		$ 0.25	bend	1			$ 0.25
							Sub Total	**$ 1.99**

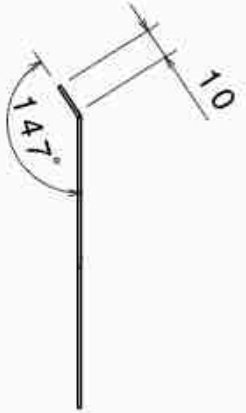

Vue de face
Echelle : 1:2

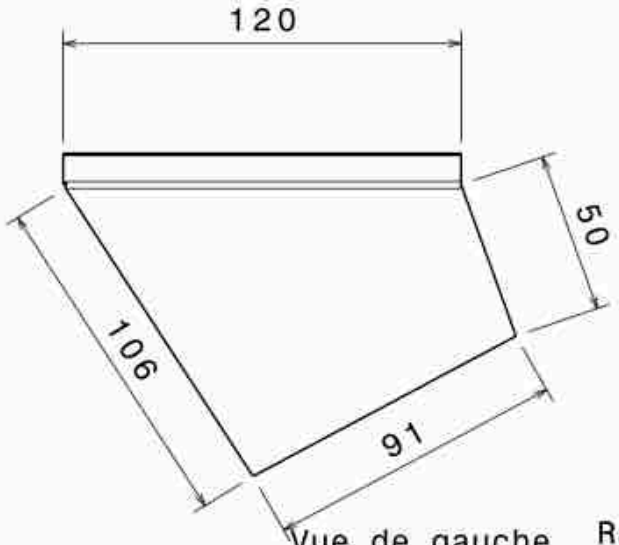

Vue de gauche
Echelle : 1:2

Rayon de courbure libre

Epaisseur : 1mm

Tolérances générales : ISO 2768mK

Taille A4		Ecurie Piston Sport Auto
Dessiné par William PIERRÉ	Date 28/02/2017	Désignation Parfeu tete lat
Coordonnées Tel : 06 88 06 96 96 Mail : wpierre@ec-lyon.fr		Quantité 1+1 / Matériau alu 2017 / Version 1.0
Plan vérifié par LOD		Echelle 1:2 / N° 17M_I_109_WPE / Feuille 1/1

University	Ecole Centrale de Lyon			Back to BOM	**Car #**	81	**Part Cost**	$	2.18
System	Miscellaneous, Finish & Assembly	Drawing :	FileLink1				**Qty**		1
Assembly	Fire Wall		**FileLink2**		**FileLink1**				
Part	Firewall rear top left plate		**FileLink3**		**FileLink2**		**Extended Cost**	$	2.18
P/N Base	MS 01005				**FileLink3**				
Suffix	AA								
Details	Symetry of MS 01004								

ItemOrder	Material	Use	UnitCost	Size1	Unit1	Size2	Unit2	Area Name	Area	Length	Density	Quantity	Sub Total
10	Aluminium, Normal	Material for part	$ 4.20	0.047	kg			Rectangular 144 mm x 120 mm	0.017280	0.001	2712	1	$ 0.20
												Sub Total	**$ 0.20**

ItemOrder	Process	Use	UnitCost	Unit	Quantity	Multiplier	Mult. Val.	Sub Total
10	Machining Setup, Install and remove	Setup for laser cut	$ 1.30		1			$ 1.30
20	Laser Cut		$ 0.01	cm	43.62	Material - Aluminium	1	$ 0.44
30	Sheet metal bends		$ 0.25	bend	1			$ 0.25
							Sub Total	**$ 1.99**

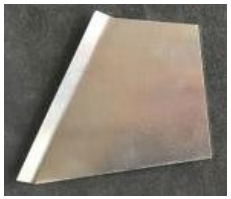

University	Ecole Centrale de Lyon		Back to BOM	**Car #**	81	**Part Cost**	$ 4.07
System	Miscellaneous, Finish & Assemb	Drawing :	FileLink1			**Qty**	1
Assembly	Fire Wall		**FileLink2**	**FileLink1**			
Part	Firewall top right plate		**FileLink3**	**FileLink2**		**Extended Cost**	$ 4.07
P/N Base	MS 01006			**FileLink3**			
Suffix	AA						
Details							

ItemOrder	Material	Use	UnitCost	Size1	Unit1	Size2	Unit2	Area Name	Area	Length	Density	Quantity	Sub Total
10	Aluminium, Normal	Material for part	$ 4.20	0.229	kg			Rectangular 650 mm x 130 mm	8.45E-02	0.001	2712	1	$ 0.96
												Sub Total	**$ 0.96**

ItemOrder	Process	Use	UnitCost	Unit	Quantity	Multiplier	Mult. Val.	Sub Total
10	Machining Setup, Install and remove	Setup for laser cut	$ 1.30		1			$ 1.30
20	Laser Cut		$ 0.01	cm	155.54	Material - Aluminium	1	$ 1.56
30	Sheet metal bends		$ 0.25	bend	1			$ 0.25
							Sub Total	**$ 3.11**

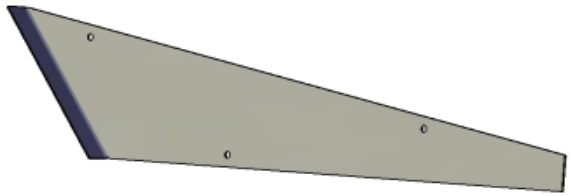

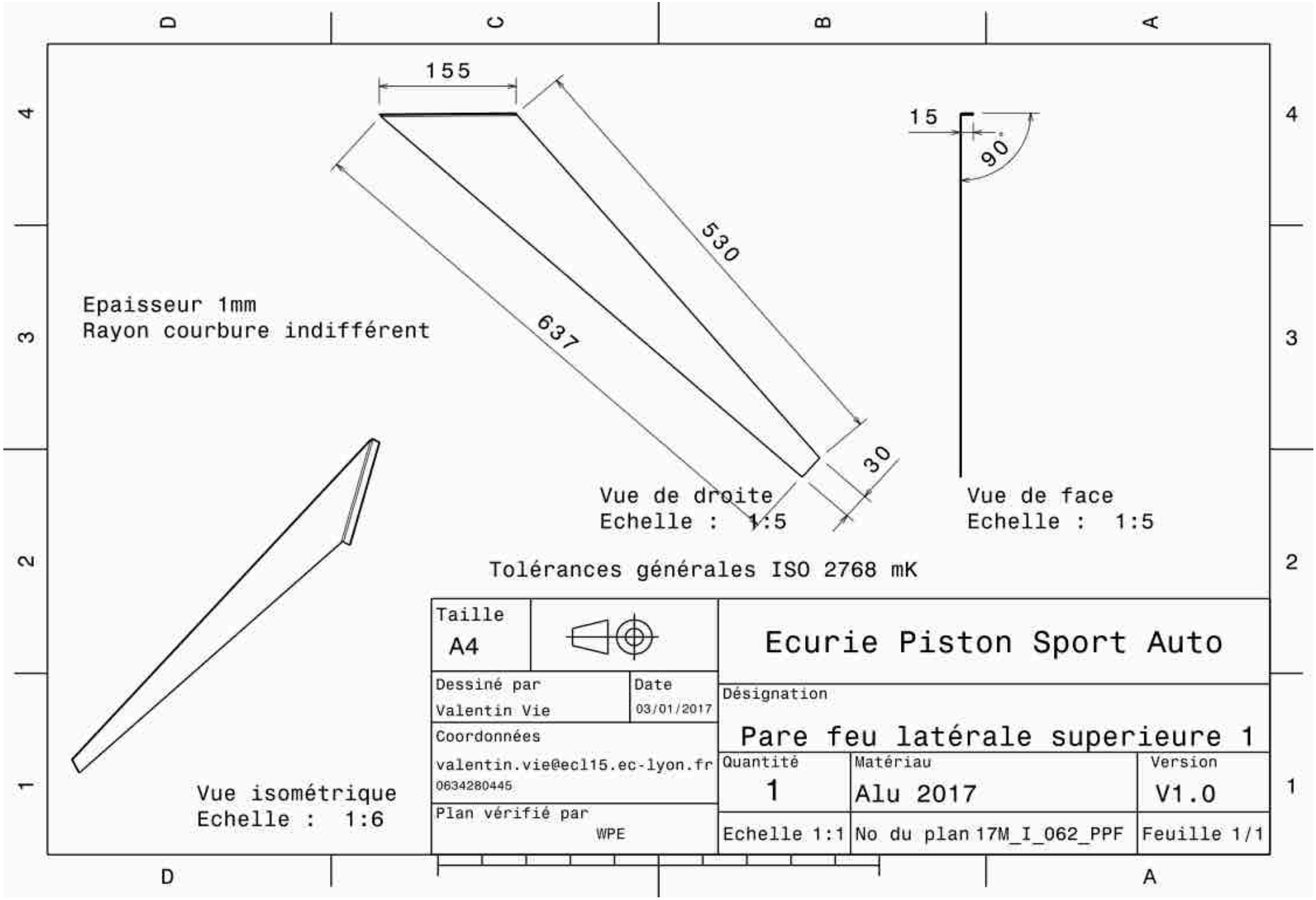
155
530
637
30
15
90°
Epaisseur 1mm
Rayon courbure indifférent
Vue de droite
Echelle : 1:5
Vue de face
Echelle : 1:5
Tolérances générales ISO 2768 mK
Vue isométrique
Echelle : 1:6
Taille
A4
Ecurie Piston Sport Auto
Dessiné par
Valentin Vie
Date
03/01/2017
Désignation
Pare feu latérale superieure 1
Coordonnées
valentin.vie@ecl15.ec-lyon.fr
0634280445
Quantité
1
Matériau
Alu 2017
Version
V1.0
Plan vérifié par
WPE
Echelle 1:1
No du plan 17M_I_062_PPF
Feuille 1/1

University	Ecole Centrale de Lyon		Back to BOM	**Car #**	81	**Part Cost**	$ 4.07
System	Miscellaneous, Finish & Assembly	Drawing :	FileLink1			**Qty**	1
Assembly	Fire Wall	**FileLink2**		**FileLink1**			
Part	Firewall top left plate	**FileLink3**		**FileLink2**		**Extended Cost**	$ 4.07
P/N Base	MS 01007			**FileLink3**			
Suffix	AA						
Details	Symetry of MS 01006						

ItemOrder	Material	Use	UnitCost	Size1	Unit1	Size2	Unit2	Area Name	Area	Length	Density	Quantity	Sub Total
10	Aluminium, Normal	Material for part	$ 4.20	0.229	kg			Rectangular 650 mm x 130 mm	8.45E-02	0.001	2712	1	$ 0.96
												Sub Total	**$ 0.96**

ItemOrder	Process	Use	UnitCost	Unit	Quantity	Multiplier	Mult. Val.	Sub Total
10	Machining Setup, Install and remove	Setup for laser cut	$ 1.30		1			$ 1.30
20	Laser Cut		$ 0.01	cm	155.54	Material - Aluminium	1	$ 1.56
30	Sheet metal bends		$ 0.25	bend	1			$ 0.25
							Sub Total	**$ 3.11**

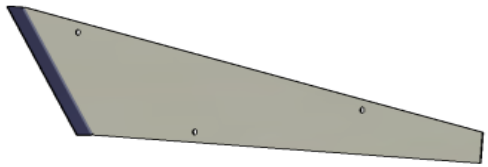

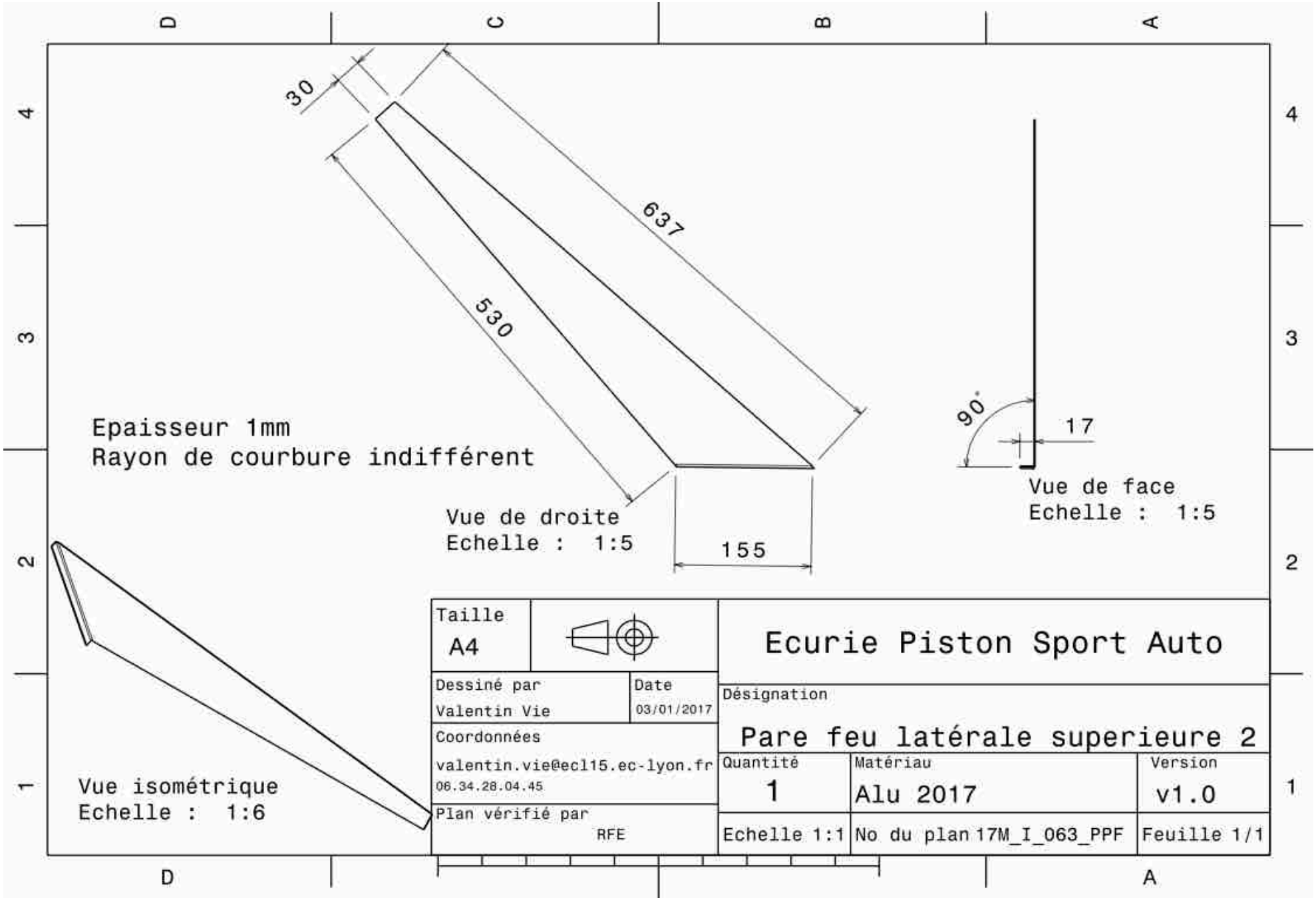
30
637
530
155
90°
17
Epaisseur 1mm
Rayon de courbure indifférent
Vue de droite
Echelle : 1:5
Vue de face
Echelle : 1:5
Vue isométrique
Echelle : 1:6
Taille
A4
Ecurie Piston Sport Auto
Dessiné par
Valentin Vie
Date
03/01/2017
Désignation
Pare feu latérale superieure 2
Coordonnées
valentin.vie@ecl15.ec-lyon.fr
06.34.28.04.45
Quantité
1
Matériau
Alu 2017
Version
v1.0
Plan vérifié par
RFE
Echelle 1:1
No du plan 17M_I_063_PPF
Feuille 1/1

University	Ecole Centrale de Lyon		Back to BOM	**Car #**	81	**Part Cost**	$ 4.22
System	Miscellaneous, Finish & Assemb	Drawing :	FileLink1			**Qty**	1
Assembly	Fire Wall		**FileLink2**	**FileLink1**			
Part	Firewall middle right plate		**FileLink3**	**FileLink2**		**Extended Cost**	$ 4.22
P/N Base	MS 01008			**FileLink3**			
Suffix	AA						
Details							

ItemOrder	Material	Use	UnitCost	Size1	Unit1	Size2	Unit2	Area Name	Area	Length	Density	Quantity	Sub Total
10	Aluminium, Normal	Material for part	$ 4.20	0.268	kg			Rectangular 660 mm x 150 mm	9.90E-02	0.001	2712	1	$ 1.13
												Sub Total	**$ 1.13**

ItemOrder	Process	Use	UnitCost	Unit	Quantity	Multiplier	Mult. Val.	Sub Total
10	Machining Setup, Install and remove	Setup for laser cut	$ 1.30		1			$ 1.30
20	Laser Cut		$ 0.01	cm	154.54	Material - Aluminium	1	$ 1.55
30	Sheet metal bends		$ 0.25	bend	1			$ 0.25
							Sub Total	**$ 3.10**

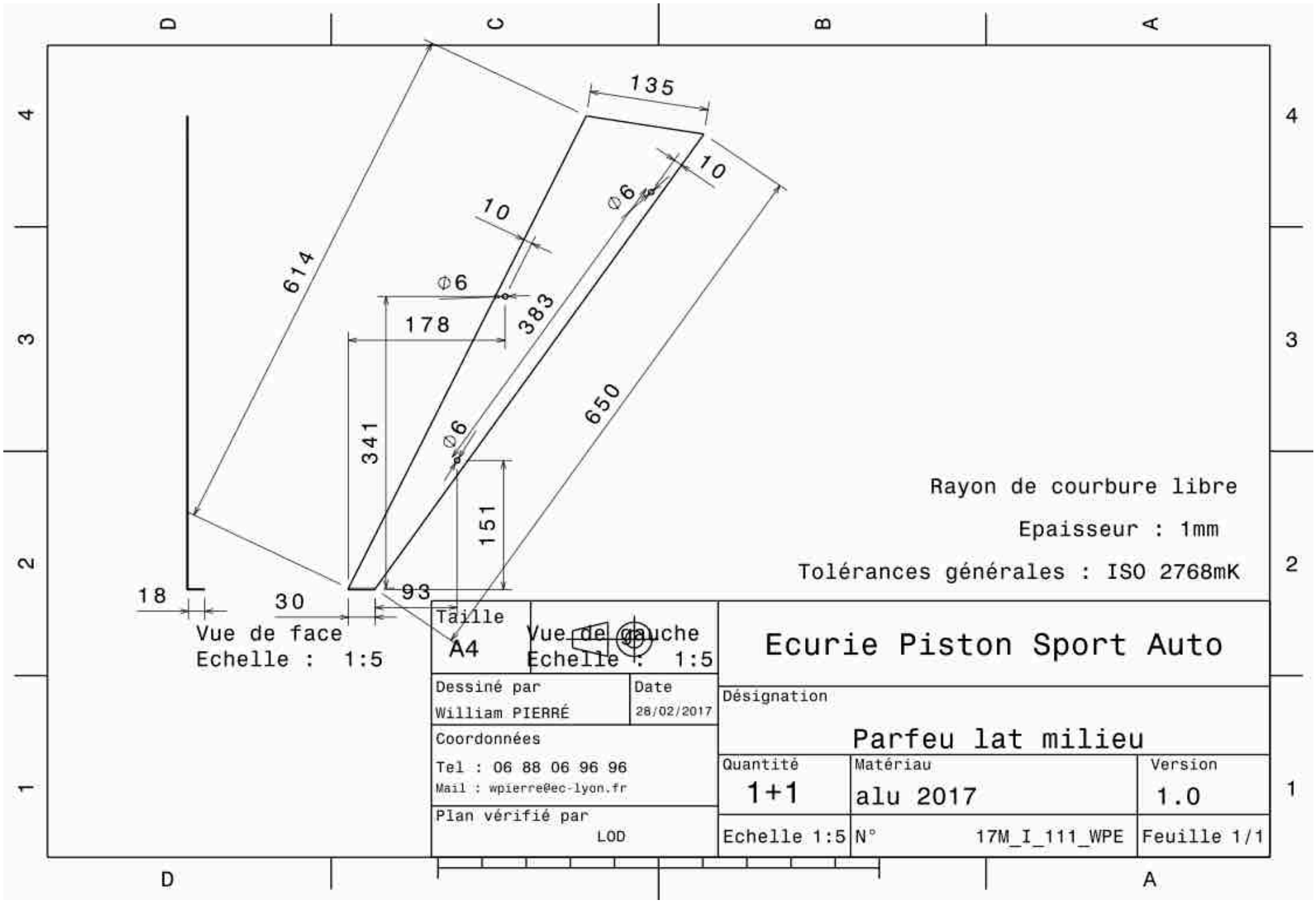
135
10
10
Ø6
Ø6
Ø6
614
178
383
341
650
151
93
18
30
Vue de face
Echelle : 1:5
Vue de gauche
Echelle : 1:5
Rayon de courbure libre
Epaisseur : 1mm
Tolérances générales : ISO 2768mK
Taille
A4
Dessiné par
William PIERRÉ
Date
28/02/2017
Coordonnées
Tel : 06 88 06 96 96
Mail : wpierre@ec-lyon.fr
Plan vérifié par
LOD
Ecurie Piston Sport Auto
Désignation
Parfeu lat milieu
Quantité
1+1
Matériau
alu 2017
Version
1.0
Echelle 1:5
N°
17M_I_111_WPE
Feuille 1/1

University	Ecole Centrale de Lyon		Back to BOM	**Car #**	81	**Part Cost**	$ 4.22
System	Miscellaneous, Finish & Assembly	Drawing :	FileLink1			**Qty**	1
Assembly	Fire Wall		**FileLink2**	**FileLink1**			
Part	Firewall middle left plate		**FileLink3**	**FileLink2**		**Extended Cost**	$ 4.22
P/N Base	MS 01009			**FileLink3**			
Suffix	AA						
Details	Symetry of MS 01008						

ItemOrder	Material	Use	UnitCost	Size1	Unit1	Size2	Unit2	Area Name	Area	Length	Density	Quantity	Sub Total
10	Aluminium, Normal	Material for part	$ 4.20	0.268	kg			Rectangular 660 mm x 150 mm	9.90E-02	0.001	2712	1	$ 1.13
												Sub Total	**$ 1.13**

ItemOrder	Process	Use	UnitCost	Unit	Quantity	Multiplier	Mult. Val.	Sub Total
10	Machining Setup, Install and remove	Setup for laser cut	$ 1.30		1			$ 1.30
20	Laser Cut		$ 0.01	cm	154.54	Material - Aluminium	1	$ 1.55
30	Sheet metal bends		$ 0.25	bend	1			$ 0.25
							Sub Total	**$ 3.10**

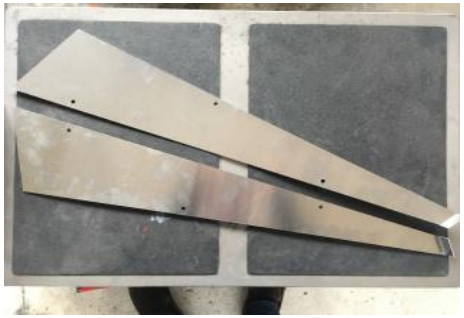

University	Ecole Centrale de Lyon		Back to BOM	**Car #**	81	**Part Cost**	$ 4.35
System	Miscellaneous, Finish & Assemb	Drawing :	FileLink1			**Qty**	1
Assembly	Fire Wall	**FileLink2**		**FileLink1**			
Part	Firewall bottom right plate	**FileLink3**		**FileLink2**		**Extended Cost**	$ 4.35
P/N Base	MS 01010			**FileLink3**			
Suffix	AA						
Details							

ItemOrder	Material	Use	UnitCost	Size1	Unit1	Size2	Unit2	Area Name	Area	Length	Density	Quantity	Sub Total
10	Aluminium, Normal	Material for part	$ 4.20	0.295	kg			Rectangular 640 mm x 170 mm	1.09E-01	0.001	2712	1	$ 1.24
												Sub Total	**$ 1.24**

ItemOrder	Process	Use	UnitCost	Unit	Quantity	Multiplier	Mult. Val.	Sub Total
10	Machining Setup, Install and remove	Setup for laser cut	$ 1.30		1			$ 1.30
20	Laser Cut		$ 0.01	cm	156.54	Material - Aluminium	1	$ 1.57
30	Sheet metal bends		$ 0.25	bend	1			$ 0.25
							Sub Total	**$ 3.12**

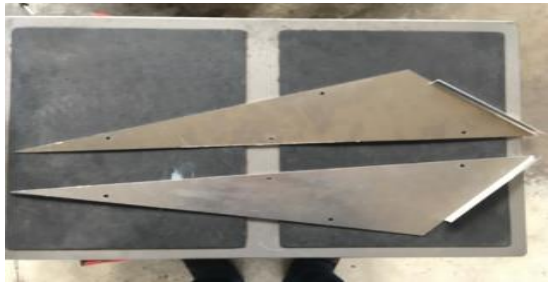

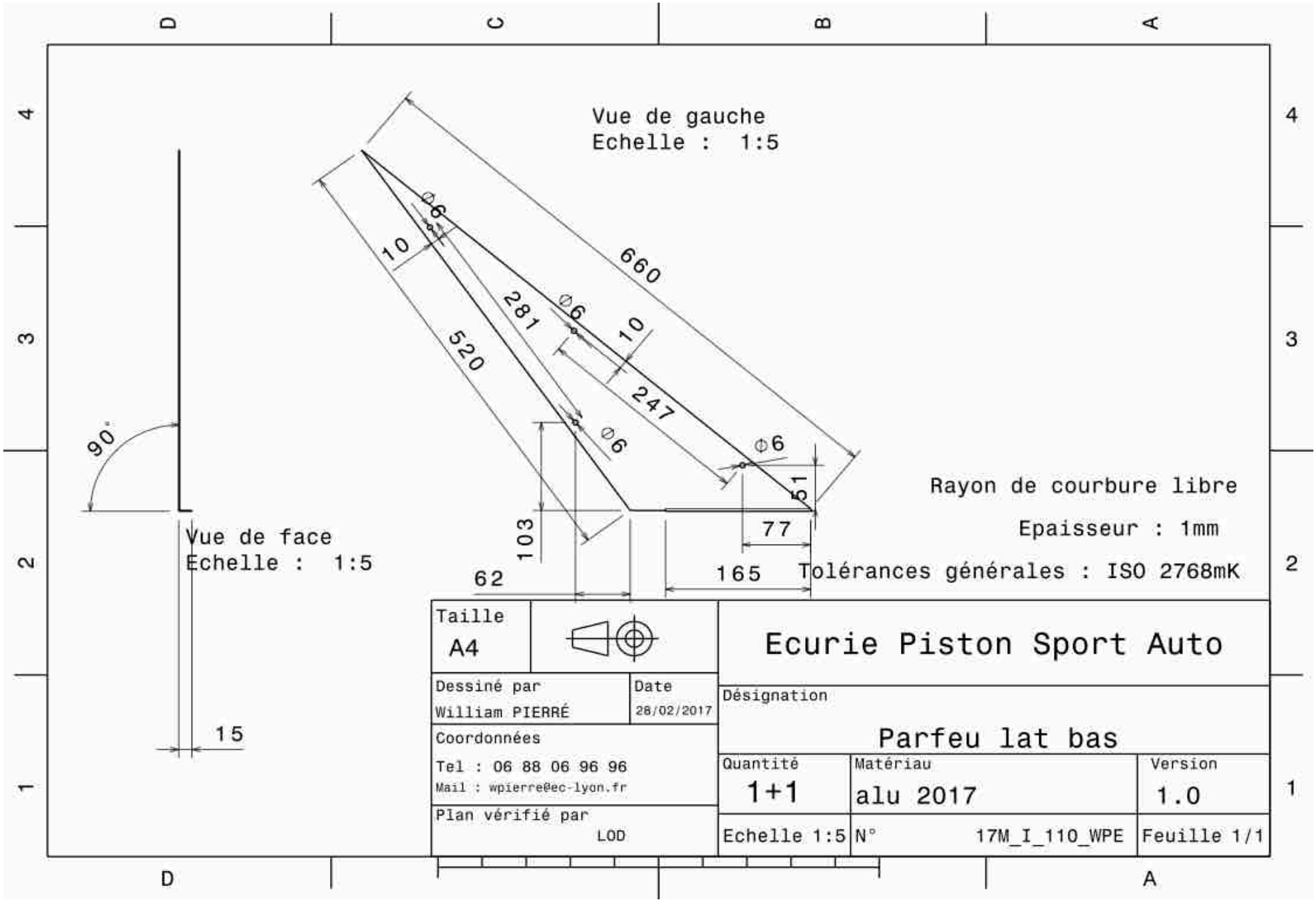
Vue de gauche
Echelle : 1:5
660
520
281
247
10
10
Ø6
Ø6
Ø6
Ø6
51
77
165
62
103
90°
Vue de face
Echelle : 1:5
15
Rayon de courbure libre
Epaisseur : 1mm
Tolérances générales : ISO 2768mK
Taille
A4
Dessiné par
William PIERRÉ
Date
28/02/2017
Coordonnées
Tel : 06 88 06 96 96
Mail : wpierre@ec-lyon.fr
Plan vérifié par
LOD
Ecurie Piston Sport Auto
Désignation
Parfeu lat bas
Quantité
1+1
Matériau
alu 2017
Version
1.0
Echelle 1:5
N°
17M_I_110_WPE
Feuille 1/1

University	Ecole Centrale de Lyon		Back to BOM	**Car #**	81	**Part Cost**	$ 4.35
System	Miscellaneous, Finish & Assembly	Drawing :	FileLink1			**Qty**	1
Assembly	Fire Wall	**FileLink2**		**FileLink1**			
Part	Firewall bottom left plate	**FileLink3**		**FileLink2**		**Extended Cost**	$ 4.35
P/N Base	MS 01011			**FileLink3**			
Suffix	AA						
Details	Symetry of MS 01010						

ItemOrder	Material	Use	UnitCost	Size1	Unit1	Size2	Unit2	Area Name	Area	Length	Density	Quantity	Sub Total
10	Aluminium, Normal	Material for part	$ 4.20	0.295	kg			Rectangular 640 mm x 170 mm	1.09E-01	0.001	2712	1	$ 1.24
												Sub Total	**$ 1.24**

ItemOrder	Process	Use	UnitCost	Unit	Quantity	Multiplier	Mult. Val.	Sub Total
10	Machining Setup, Install and remove	Setup for laser cut	$ 1.30		1			$ 1.30
20	Laser Cut		$ 0.01	cm	156.54	Material - Aluminium	1	$ 1.57
30	Sheet metal bends		$ 0.25	bend	1			$ 0.25
							Sub Total	**$ 3.12**

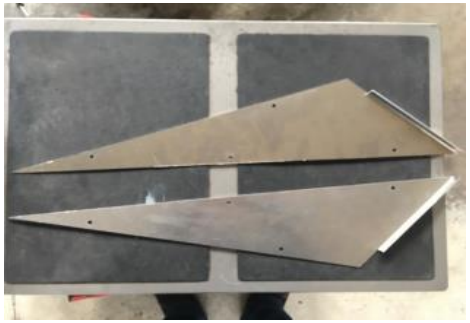

University	Ecole Centrale de Lyon			Back to BOM	**Car #**	81	**Part Cost**	$	1.00
System	Miscellaneous, Finish & Assemb	Drawing :	FileLink1				**Qty**		2
Assembly	Fire Wall		**FileLink2**		**FileLink1**				
Part	Tab top		**FileLink3**		**FileLink2**		**Extended Cost**	$	2.00
P/N Base	MS 01012				**FileLink3**				
Suffix	AA								
Details									

ItemOrder	Material	Use	UnitCost	Size1	Unit1	Size2	Unit2	Area Name	Area	Length	Density	Quantity	Sub Total
10	Steel,Mild	Material for part	$ 2.25	0.008	kg			Rectangular 20 mm x 26 mm	5.20E-04	0.002	7850	1	$ 0.02
												Sub Total	**$ 0.02**

ItemOrder	Process	Use	UnitCost	Unit	Quantity	Multiplier	Mult. Val.	Sub Total
10	Machining Setup, Install and remove	Setup for laser cut	$ 1.30		1	2 parts cut from a single machine setup	0.5	$ 0.65
20	Laser Cut		$ 0.01	cm	10.98	Material - Steel	3	$ 0.33
							Sub Total	**$ 0.98**

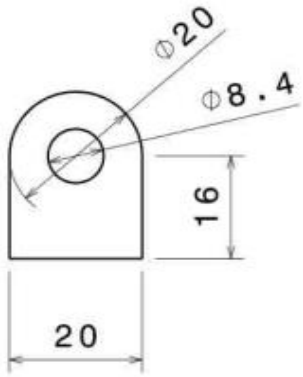

Vue de face
Echelle : 1:1

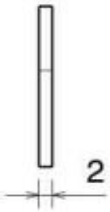

Vue de coté
Echelle : 1:1

Vue isométrique
Echelle : 1:1

Taille A4		Ecurie Piston Sport Auto
Dessiné par Valentin Vie	Date 13/12/2016	Désignation: Chappe pare feu haut
Coordonnées Tel. : 06 34 28 04 45 vvie@ec-lyon.fr		Quantité 2 / Matériau Acier S235 / Version 1.0
Plan vérifié par AGU		Echelle 1:1 / No du plan 17M_I_059_PPF / Feuille 1/1

University	Ecole Centrale de Lyon		Back to BOM	**Car #**	81	**Part Cost**	$ 1.03
System	Miscellaneous, Finish & Assemb	Drawing :	FileLink1			**Qty**	2
Assembly	Fire Wall		**FileLink2**	**FileLink1**			
Part	Tab bottom		**FileLink3**	**FileLink2**		**Extended Cost**	$ 2.06
P/N Base	MS 01013			**FileLink3**			
Suffix	AA						
Details							

ItemOrder	Material	Use	UnitCost	Size1	Unit1	Size2	Unit2	Area Name	Area	Length	Density	Quantity	Sub Total
10	Steel,Mild	Material for part	$ 2.25	0.009	kg			Rectangular 20 mm x 30 mm	6.00E-04	0.002	7850	1	$ 0.02
												Sub Total	**$ 0.02**

ItemOrder	Process	Use	UnitCost	Unit	Quantity	Multiplier	Mult. Val.	Sub Total
10	Machining Setup, Install and remove	Setup for laser cut	$ 1.30		1	2 parts cut from a single machine setup	0.5	$ 0.65
20	Laser Cut		$ 0.01	cm	11.96	Material - Steel	3	$ 0.36
							Sub Total	**$ 1.01**

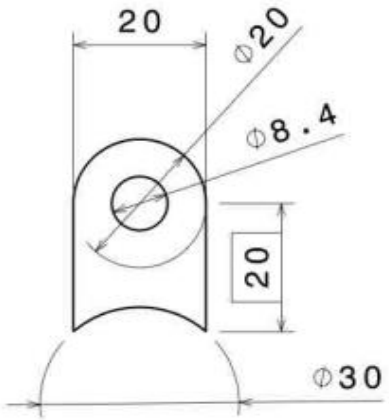

Vue de face
Echelle : 1:1

Vue de coté
Echelle : 1:1

Vue isométrique
Echelle : 1:1

Taille A4		Ecurie Piston Sport Auto
Dessiné par Valentin Vie	Date 13/12/2016	Désignation: Chappe basse paroi pare feu
Coordonnées valentin.vie@ecl15.ec-lyon.fr 06.34.28.04.45		Quantité 2 / Matériau Acier S235 / Version 1.0
Plan vérifié par AGU		Echelle 1:1 / No du plan 17M_I_60_PPF / Feuille 1/1

University	Ecole Centrale de Lyon			Back to BOM	**Car #**	81	**Part Cost**	$	0.33
System	Miscellaneous, Finish & Assemb	Drawing :	FileLink1				**Qty**		20
Assembly	Fire Wall		**FileLink2**		**FileLink1**				
Part	Tab lateral		**FileLink3**		**FileLink2**		**Extended Cost**	$	6.51
P/N Base	MS 01014				**FileLink3**				
Suffix	AA								
Details									

ItemOrder	Material	Use	UnitCost	Size1	Unit1	Size2	Unit2	Area Name	Area	Length	Density	Quantity	Sub Total
10	Steel,Mild	Material for part	$ 2.25	0.005	kg			Rectangular 19 mm x 16 mm	3.04E-04	0.002	7850	1	$ 0.01
												Sub Total	**$ 0.01**

ItemOrder	Process	Use	UnitCost	Unit	Quantity	Multiplier	Mult. Val.	Sub Total
10	Machining Setup, Install and remove	Setup for laser cut	$ 1.30		1	20 parts cut from a single machine setup	0.05	$ 0.07
20	Laser Cut		$ 0.01	cm	8.32	Material - Steel	3	$ 0.25
							Sub Total	**$ 0.31**

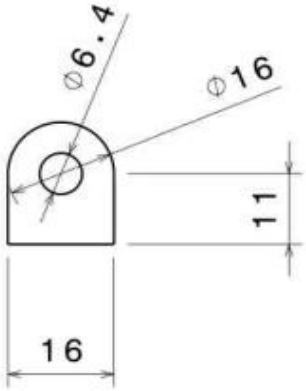

Vue de face
Echelle : 1:1

Vue de coté
Echelle : 1:1

Vue isométrique
Echelle : 1:1

Taille A4		Ecurie Piston Sport Auto
Dessiné par Valentin Vie	Date 13/12/2016	Désignation Chappes laterales pare feu
Coordonnées vvie@ec-lyon.fr 06.34.28.04.45		Quantité 20 / Matériau Acier S235 / Version 1.0
Plan vérifié par AGU		Echelle 1:1 / No du plan 17M_I_061_PPF / Feuille 1/1

University	Ecole Centrale de Lyon	Back to BOM	**Car #**	81	**Asm Cost** $ 6.52
System	Miscellaneous, Finish & Assembly				**Qty** 1
Assembly	Safety		**FileLink1**		
P/N Base	MS A0002		**FileLink2**		**Extended Cost** $ 6.52
Suffix	AA		**FileLink3**		
Details					

ItemOrder	Part	Part Cost	Quantity	Sub Total
10	Roll Bar Padding	$ 2.87	2	$ 5.74
			Sub Total	**$ 5.74**

ItemOrder	Process	Use	UnitCost	Unit	Quantity	Multiplier	Mult. Val.	Sub Total
10	Assemble, 1kg, Line-on-Line	Glue Roll bar padding on roll bar	$ 0.13	Unit	2		1	$ 0.26
20	Install Tie Wrap (Zip Tie, Cable Clamp)	Fixing the roll bar padding	$ 0.09	Unit	4		1	$ 0.36
							Sub Total	**$ 0.62**

ItemOrder	Fastener	Use	UnitCost	Size1	Unit1	Size2	Unit2	Quantity	Sub Total
10	Tie Wrap	Fixing the roll bar padding	$ 0.04		unit			4	$ 0.16
								Sub Total	**$ 0.16**

University	Ecole Centrale de Lyon		Back to BOM	**Car #**	11	**Part Cost**	$ 2.87
System	Miscellaneous, Finish & Assembly	**FileLink1**				**Qty**	2
Assembly	Safety	**FileLink2**		**FileLink1**			
Part	Roll Bar Padding	**FileLink3**		**FileLink2**		**Extended Cost**	$ 5.74
P/N Base	MS 02001			**FileLink3**			
Suffix	AA						
Details							

ItemOrder	Material	Use	UnitCost	Size1	Unit1	Size2	Unit2	Area Name	Area	Length	Density	Quantity	Sub Total
10	Roll Hoop Padding		$ 0.05	30	cm							1	$ 0.05
20	Adhesive	Glue padding to roll hoop - Cost included in process	$ -		unit							1	$ -
												Sub Total	**$ 0.05**

ItemOrder	Process	Use	UnitCost	Unit	Quantity	Multiplier	Mult. Val.	Sub Total
10	Brush apply	Apply glue to padding	$ 0.02	cm^2	141			$ 2.82
							Sub Total	**$ 2.82**

University	Ecole Centrale de Lyon	Back to BOM	Car #	81	Asm Cost $ 65.91
System	Miscellaneous, Finish & Assembly				Qty 1
Assembly	Headrest		FileLink1		
P/N Base	MS A0003		FileLink2		Extended Cost $ 65.91
Suffix	AA		FileLink3		
Details	Stop the driver's head in case of crash				

ItemOrder	Part	Part Cost	Quantity	Sub Total
10	Headrest back plate	$ 6.31	1	$ 6.31
20	Upper tab	$ 1.07	2	$ 2.14
30	Lower tab	$ 0.97	2	$ 1.94
			Sub Total	$ 10.40

ItemOrder	Material	Use	UnitCost	Size1	Unit1	Size2	Unit2	Area Name	Area	Length	Density	Quantity	Sub Total
10	Paint	Steel tabs painting	$ 10.00	0.01	m²							1	$ 0.10
20	Head Rest Padding	Headrest foam padding	$ 0.01	546	cm²	4	cm					1	$ 10.92
30	Fabric	Fix harness on tube mount	$ 2.50	0.20	m²							1	$ 0.50
40	Adhesive	Glue padding to plate	$ -									1	$ -
												Sub Total	$ 11.52

ItemOrder	Process	Use	UnitCost	Unit	Quantity	Multiplier	Mult. Val.	Sub Total
10	Weld	Tabs welding on frame	$ 0.15	cm	11.5			$ 1.73
20	Aerosol apply	Paint tabs	$ 5.25	m²	0.01			$ 0.05
30	Cut (scissors, knife)	Cut head rest padding into shape	$ 0.06	cm	90			$ 5.40
40	Cut (scissors, knife)	Cut fabric into shape	$ 0.06	cm	120			$ 7.20
50	B rush Apply	Apply glue to padding	$ 0.02	cm²	820			$ 16.40
60	Assemble, 1 kg, Line-on-Line	Assemble fabric on padding	$ 0.13	Unit	1			$ 0.13
70	B rush Apply	Apply glue to plate	$ 0.02	cm²	360			$ 7.20
80	Assemble, 1 kg, Loose	Assemble padding and fabric on plate	$ 0.06	Unit	1			$ 0.06
90	Assemble, 1 kg, Line-on-Line	Assemble plate on tabs	$ 0.13	Unit	1			$ 0.13
100	Ratchet <= 6.35 mm	Bolt plate to tabs (loose)	$ 0.75	Unit	4			$ 3.00
110	Reaction Tool <= 6.35 mm	Assemble eyebolts on tabs	$ 0.25	Unit	4			$ 1.00
							Sub Total	$ 42.30

ItemOrder	Fastener	Use	UnitCost	Size1	Unit1	Size2	Unit2	Quantity	Sub Total
10	Bolt, Grade 8.8 (SAE 5)	Attach plate to tabs	$ 0.04	6	mm	16	mm	4	$ 0.16
20	Nut, Panel Retained	Attach plate to tabs	$ 0.03	6	mm			4	$ 0.12
30	Washer, Grade 8.8 (SAE 5)	Attach plate to tabs	$ 0.01		Unit			8	$ 0.08
								Sub Total	$ 0.36

ItemOrder	Tooling	Use	UnitCost	Unit	Quantity	PVF	FractionIncluded	Sub Total
10	Welds - Welding Fixture	Tabs welding on frame	$ 500.00	point	8	3000	1	$ 1.33
							Sub Total	$ 1.33

University	Ecole Centrale de Lyon		Back to BOM	**Car #**	81	**Part Cost**	$ 6.31
System	Miscellaneous, Finish & Assembly	Drawing :	FileLink1			**Qty**	1
Assembly	Headrest	**FileLink2**		**FileLink1**			
Part	Headrest back plate	**FileLink3**		**FileLink2**		**Extended Cost**	$ 6.31
P/N Base	MS 03001			**FileLink3**			
Suffix	AA						
Details							

ItemOrder	Material	Use	UnitCost	Size1	Unit1	Size2	Unit2	Area Name	Area	Length	Density	Quantity	Sub Total
10	Aluminum, Normal	Material part	$ 4.20	0.532	kg			Rectangular area, 350x280 mm	9.80E-02	0.002	2712	1	$ 2.23
												Sub Total	**$ 2.23**

ItemOrder	Process	Use	UnitCost	Unit	Quantity	Multiplier	Mult. Val.	Sub Total
10	Machining Setup, Install and Remove	Setup for laser cutting	$ 1.30	Unit	1		1	$ 1.30
20	Laser cut	Outer profile and holes	$ 0.01	cm	178.18		1	$ 1.78
30	Sheet metal bends		$ 0.25	bend	4		1	$ 1.00
							Sub Total	**$ 4.08**

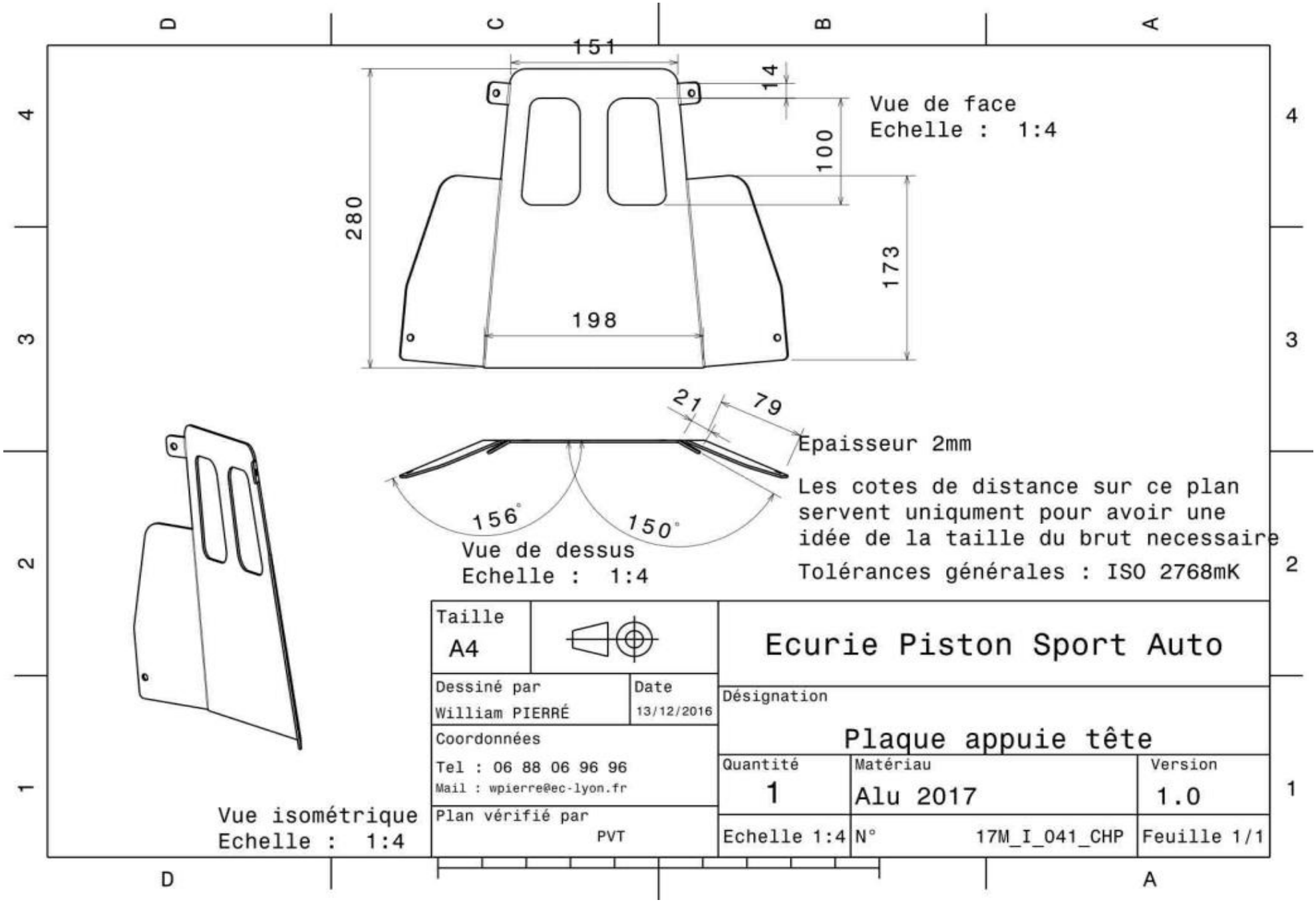
151
14
100
280
173
198
Vue de face
Echelle : 1:4
21
79
Epaisseur 2mm
156°
150°
Vue de dessus
Echelle : 1:4
Les cotes de distance sur ce plan servent uniquement pour avoir une idée de la taille du brut necessaire
Tolérances générales : ISO 2768mK
Vue isométrique
Echelle : 1:4
Taille
A4
Dessiné par
William PIERRÉ
Date
13/12/2016
Coordonnées
Tel : 06 88 06 96 96
Mail : wpierre@ec-lyon.fr
Plan vérifié par
PVT
Ecurie Piston Sport Auto
Désignation
Plaque appuie tête
Quantité
1
Matériau
Alu 2017
Version
1.0
Echelle 1:4
N°
17M_I_041_CHP
Feuille 1/1

University	Ecole Centrale de Lyon			Back to BOM	**Car #**	81	**Part Cost**	$	1.07
System	Miscellaneous, Finish & Assembly	Drawing :	FileLink1				**Qty**		2
Assembly	Headrest		**FileLink2**		**FileLink1**				
Part	Upper tab		**FileLink3**		**FileLink2**		**Extended Cost**	$	2.14
P/N Base	MS 03002				**FileLink3**				
Suffix	AA								
Details									

ItemOrder	Material	Use	UnitCost	Size1	Unit1	Size2	Unit2	Area Name	Area	Length	Density	Quantity	Sub Total
10	Steel, Mild (per kg)		$ 2.25	0.014	kg			Rectangular area 40x30 mm	1.20E-03	1.50E-03	7850	1	$ 0.03
												Sub Total	**$ 0.03**

ItemOrder	Process	Use	UnitCost	Unit	Quantity	Multiplier	Mult. Val.	Sub Total
10	Machining Setup, Install and	Setup for laser cut	$ 1.30	Unit	1	2 parts cut from a single machine setup	0.5	$ 0.65
20	Laser Cut	Laser cut of the tab	$ 0.01	cm	13	Material - Steel	3	$ 0.39
							Sub Total	**$ 1.04**

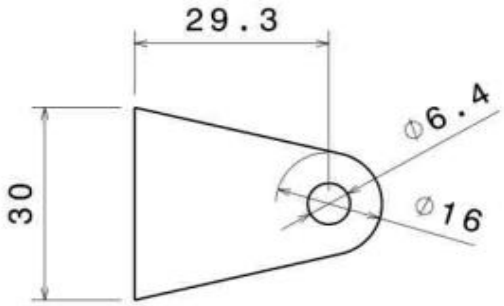

Vue de face
Echelle : 1:1

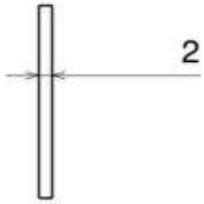

Vue de gauche
Echelle : 1:1

Tolérances générales : ISO 2768mK

Taille A4		Ecurie Piston Sport Auto
Dessiné par William PIERRÉ	Date 08/12/2016	Désignation Chape appuie tête haute
Coordonnées Tel : 06 88 06 96 96 Mail : wpierre@ec-lyon.fr		
Plan vérifié par LOD		Quantité 2 / Matériau acier s235 / Version 1.0
		Echelle 1:1 / N° 17M_I_035_CHP / Feuille 1/1

University	Ecole Centrale de Lyon		Back to BOM	**Car #**	81	**Part Cost**	$ 0.97
System	Miscellaneous, Finish & Assembly	Drawing :	FileLink1			**Qty**	2
Assembly	Headrest		**FileLink2**	**FileLink1**			
Part	Lower tab		**FileLink3**	**FileLink2**		**Extended Cost**	$ 1.94
P/N Base	MS 03003			**FileLink3**			
Suffix	AA						
Details							

ItemOrder	Material	Use	UnitCost	Size1	Unit1	Size2	Unit2	Area Name	Area	Length	Density	Quantity	Sub Total
10	Steel, Mild (per kg)		$ 2.25	0.009	kg			Rectangular area 25x30 mm	7.50E-04	1.50E-03	7850	1	$ 0.02
												Sub Total	**$ 0.02**

ItemOrder	Process	Use	UnitCost	Unit	Quantity	Multiplier	Mult. Val.	Sub Total
10	Machining Setup, Install and	Setup for laser cut	$ 1.30	Unit	1	2 parts cut from a single machine setup	0.5	$ 0.65
20	Laser Cut	Laser cut of the tab	$ 0.01	cm	10	Material - Steel	3	$ 0.30
							Sub Total	**$ 0.95**

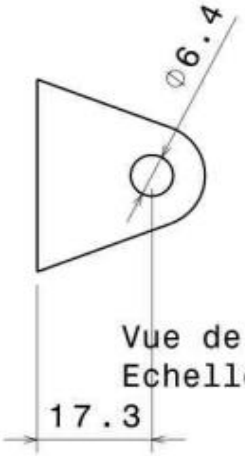

Vue de face
Echelle : 1:1

Vue de gauche
Echelle : 1:1

Tolérances générales : ISO 2768mK

Taille A4		Ecurie Piston Sport Auto
Dessiné par William PIERRÉ	Date 08/12/2016	Désignation Chape appuie tête basse
Coordonnées Tel : 06 88 06 96 96 Mail : wpierre@ec-lyon.fr		
Plan vérifié par LOD		Quantité 2 / Matériau acier s235 / Version 1.0
		Echelle 1:1 / N° 17M_I_034_CHP / Feuille 1/1

University	Ecole Centrale de Lyon	Back to BOM	**Car #**	81	**Asm Cost** $ 218.60
System	Miscellaneous, Finish & Assembly				**Qty** 1
Assembly	Seat		**FileLink1**		
P/N Base	MS A0004		**FileLink2**		**Extended Cost** $ 218.60
Suffix	AA		**FileLink3**		
Details	Seat assembly				

ItemOrder	Part	Part Cost	Quantity	Sub Total
10	Seat	$ 198.87	1	$ 198.87
20	Seat tab	$ 2.61	2	$ 5.21
30	Seat mount	$ 6.08	1	$ 6.08
			Sub Total	**$ 210.16**

ItemOrder	Material	Use	UnitCost	Size1	Unit1	Size2	Unit2	Area Name	Area	Length	Density	Quantity	Sub Total
10	Paint	Seat tabs painting	$ 10.00	0.015	m^2							1	$ 0.15
												Sub Total	**$ 0.15**

ItemOrder	Process	Use	UnitCost	Unit	Quantity	Multiplier	Mult. Val.	Sub Total
10	Weld	Seat tabs welding on frame	$ 0.15	cm	12		1	$ 1.80
20	Aerosol Apply	Seat tabs painting	$ 5.25	m^2	0.015		1	$ 0.08
30	Assemble, 1kg, Loose	Assemble seat and seat mount	$ 0.06	Unit	1		1	$ 0.06
40	Assemble, 1kg, Line-on-Line	Seat installation	$ 0.13	Unit	1		1	$ 0.13
50	Ratchet <= 25.4 mm	Fastener installation between seat and tabs	$ 0.75	Unit	2		1	$ 1.50
60	Reaction Tool <= 25.4 mm	Fastener installation between seat and tabs	$ 0.25	Unit	2		1	$ 0.50
70	Assemble, 1kg, Loose	Seat harness installation	$ 0.06	Unit	1		1	$ 0.06
80	Ratchet <= 25.4 mm	Fastener installation for seat harness	$ 0.75	Unit	2		1	$ 1.50
90	Reaction Tool <= 25.4 mm	Fastener installation for seat harness	$ 0.25	Unit	2		1	$ 0.50
							Sub Total	**$ 6.13**

ItemOrder	Fastener	Use	UnitCost	Size1	Unit1	Size2	Unit2	Quantity	Sub Total
10	Bolt, Grade 8.8 (SAE 5)	Bolt seat and tabs	$0.19	8	mm	45	mm	2	$ 0.37
20	Nut, Grade 8.8 (SAE 5)	Bolt seat and tabs	$0.04	8	mm			2	$ 0.09
30	Washer, Grade 8.8 (SAE 5)	Bolt seat and tabs	$0.01	1	Unit			4	$ 0.04
40	Bolt, Grade 8.8 (SAE 5)	For assembly of the harness	$0.10	8	mm	25	mm	2	$ 0.20
50	Nut, Grade 8.8 (SAE 5)	For assembly of the harness	$0.04	8	mm			2	$ 0.09
60	Washer, Grade 8.8 (SAE 5)	For assembly of the harness	$0.01	1	Unit			4	$ 0.04
								Sub Total	**$ 0.83**

ItemOrder	Tooling	Use	UnitCost	Unit	Quantity	PVF	FractionIncluded	Sub Total
10	Welds - Welding Fixture	Seat tabs welding on frame	$ 500.00	Point	8	3000	1	$ 1.33
							Sub Total	**$ 1.33**

University	Ecole Centrale de Lyon		Back to BOM	**Car #**	81	**Part Cost**	$ 198.87
System	Miscellaneous, Finish & Assembly	**FileLink1**				**Qty**	1
Assembly	Seat	**FileLink2**		**FileLink1**			
Part	Seat	**FileLink3**		**FileLink2**		**Extended Cost**	$ 198.87
P/N Base	MS 04001			**FileLink3**			
Suffix	AA						
Details	Glass fiber seat, cost as made						

ItemOrder	Material	Use	UnitCost	Size1	Unit1	Size2	Unit2	Area Name	Area	Length	Density	Quantity	Sub Total
10	Glass Fiber, 1 Ply	Material for part	$ 100.00	0.09	kg							2	$ 18.00
20	Aramid (Kevlar) Fiber, 1 Ply	Material for part	$ 150.00	0.252	kg							2	$ 75.60
30	Grommet, Elastomer	For harness holes	$ 0.05									16	$ 0.80
												Sub Total	**$ 94.40**

ItemOrder	Process	Use	UnitCost	Unit	Quantity	Multiplier	Mult. Val.	Sub Total
10	Cut (scissors, knife)	Cut ply	$ 0.06	cm	230	Repeat 3 times	3	$ 41.40
20	Lamination, Manual	Lamination	$ 35.00	m^2	0.44	Repeat 3 times	3	$ 46.20
30	Resin application, Manual	Resin application	$ 5.00	m^2	0.44	Repeat 3 times	3	$ 6.60
40	Non-metallic cutting > 76.2 mm	Cutout seat border	$ 1.40	cut	1			$ 1.40
50	Non-metallic cutting > 76.2 mm	Cutout harness holes	$ 1.40	cut	2			$ 2.80
60	Hand Finish - Material Removal	Clean cuts	$ 0.20	cm^3	1			$ 0.20
70	Assemble, 1 kg, Interference	Insert gromets	$ 0.19	Unit	16			$ 3.00
80	Drilled holes < 25.4 mm dia.	Cutout fixation holes	$ 0.35	hole	4			$ 1.40
							Sub Total	**$ 103.00**

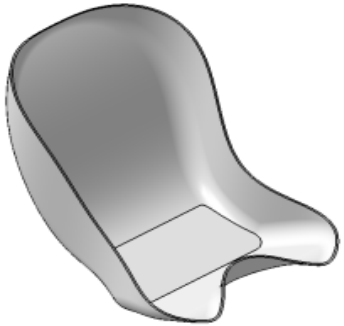

ItemOrder	Tooling	Use	UnitCost	Unit	Quantity	PVF	FractionInc	Sub Total
10	Lamination – Composite Tool	Lamination	$ 10,000.00	m^2	0.44	3000	1	$ 1.47
							Sub Total	**$ 1.47**

University	Ecole Centrale de Lyon			Back to BOM	**Car #**	81	**Part Cost**	$	2.61
System	Miscellaneous, Finish & Assembly	Drawing :	FileLink1				**Qty**		2
Assembly	Seat		**FileLink2**		**FileLink1**				
Part	Seat tab		**FileLink3**		**FileLink2**		**Extended Cost**	$	5.21
P/N Base	MS 04002				**FileLink3**				
Suffix	AA								
Details									

ItemOrder	Material	Use	UnitCost	Size1	Unit1	Size2	Unit2	Area Name	Area	Length	Density	Quantity	Sub Total
10	Steel, Mild		$ 2.25	0.221	kg			Rectangular area, 235 x 30 mm	7.05E-03	0.004	7850	1	$ 0.50
												Sub Total	**$ 0.50**

ItemOrder	Process	Use	UnitCost	Unit	Quantity	Multiplier	Mult. Val.	Sub Total
10	Machining, Install and Remove		$ 1.30	Unit	1	2 parts cut from a single machine setup	0.5	$ 0.65
20	Laser cut	Outer profile and hole	$ 0.01	cm	48.6	Material - Steel	3	$ 1.46
							Sub Total	**$ 2.11**

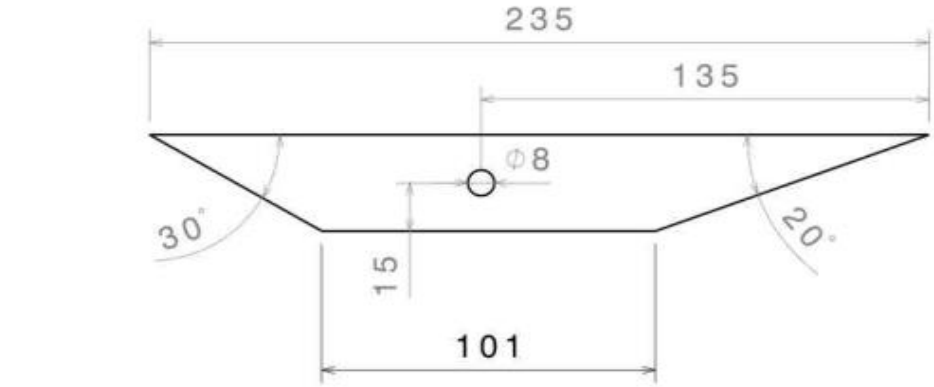

Vue de face
Echelle : 1:2

Vue de gauche
Echelle : 1:2

Vue isométrique
Echelle : 1:3

Taille A4		Ecurie Piston Sport Auto
Dessiné par Valentin Vie	Date 03/01/2017	Désignation: Chape maintient siège
Coordonnées valentin.vie@ecl15.ec-lyon.fr 06.34.28.04.45		Quantité 2 / Matériau Acier S235 / Version v1.0
Plan vérifié par AGU		Echelle 1:1 / No du plan 17M_I_098_SGE / Feuille 1/1

University	Ecole Centrale de Lyon		Back to BOM	**Car #**	81	**Part Cost**	$ 6.08
System	Miscellaneous, Finish & Assembly	**FileLink1**				**Qty**	1
Assembly	Seat	**FileLink2**		**FileLink1**			
Part	Seat mount	**FileLink3**		**FileLink2**		**Extended Cost**	$ 6.08
P/N Base	MS 04003			**FileLink3**			
Suffix	AA						
Details	Made to improve seat stability						

ItemOrder	Material	Use	UnitCost	Size1	Unit1	Size2	Unit2	Area Name	Area	Length	Density	Quantity	Sub Total
10	Steel, Mild		$ 2.25	0.921	kg			Rectangular area, 230x170 mm	3.91E-02	0.003	7850	1	$ 2.07
												Sub Total	**$ 2.07**

ItemOrder	Process	Use	UnitCost	Unit	Quantity	Multiplier	Mult. Val.	Sub Total
10	Machining, Install and Remove		$ 1.30	Unit	1		1	$ 1.30
20	Laser cut	Outer profile and holes	$ 0.01	cm	73.5	Material - Steel	3	$ 2.21
30	Sheet metal bends	Bends	$ 0.25	bend	2		1	$ 0.50
							Sub Total	**$ 4.01**

University	Ecole Centrale de Lyon	Back to BOM	**Car #**	81	**Asm Cost** $ 56.14
System	Miscellaneous, Finish & Assembly				**Qty** 1
Assembly	Harness		**FileLink1**		
P/N Base	MS A0005		**FileLink2**		**Extended Cost** $ 56.14
Suffix	AA		**FileLink3**		
Details	Driver harness assembly				

ItemOrder	Part	Part Cost	Quantity	Sub Total
10	Harness tab	$ 1.25	2	$ 2.49
			Sub Total	**$ 2.49**

ItemOrder	Material	Use	UnitCost	Size1	Unit1	Size2	Unit2	Area Name	Area	Length	Density	Quantity	Sub Total
10	Harness, Driver	6-point harness	$ 45.00	1	Unit							1	$ 45.00
20	Paint	Harness tab painting	$ 10.00	0.006	m^2							0.006	$ 0.06
												Sub Total	**$ 45.06**

ItemOrder	Process	Use	UnitCost	Unit	Quantity	Multiplier	Mult. Val.	Sub Total
10	Weld	Harness tab welding to frame	$ 0.15	cm	3.6	Repeat - 2	2	$ 1.08
20	Aerosol apply	Harness tab painting	$ 5.25	m^2	0.006		1	$ 0.03
30	Assemble, 1kg, Loose	Assemble eyebolts on tabs	$ 0.06	Unit	2		1	$ 0.12
40	Wrench <= 25.4 mm	Fastener installation between harness and harness mount	$ 1.50	Unit	2		1	$ 3.00
50	Reaction tool <= 25.4 mm	Fastener installation between harness and harness mount	$ 0.25	Unit	2		1	$ 0.50
60	Assemble,, 3kg, Loose	Assemble harness	$ 0.19	Unit	1		1	$ 0.19
							Sub Total	**$ 4.92**

ItemOrder	Fastener	Use	UnitCost	Size1	Unit1	Size2	Unit2	Quantity	Sub Total
10	Eyebolt, Threaded, Steel	Attach harness to tabs	$ 1.43	10	mm			2	$ 2.86
20	Nut, Grade 8.8 (SAE 5)	Attach harness to tabs	$ 0.07	10	mm			2	$ 0.14
								Sub Total	**$ 3.00**

ItemOrder	Tooling	Use	UnitCost	Unit	Quantity	PVF	FractionIncluded	Sub Total
10	Welds - Welding Fixture	Harness tab welding to frame	$ 500.00	point	4	3000	1	$ 0.67
							Sub Total	**$ 0.67**

University	Ecole Centrale de Lyon		Back to BOM	**Car #**	81	**Part Cost**	$ 1.25
System	Miscellaneous, Finish & Assembly	Drawing :	FileLink1			**Qty**	2
Assembly	Harness	**FileLink2**		**FileLink1**			
Part	Harness tab	**FileLink3**		**FileLink2**		**Extended Cost**	$ 2.49
P/N Base	MS 05001			**FileLink3**			
Suffix	AA						
Details							

ItemOrder	Material	Use	UnitCost	Size1	Unit1	Size2	Unit2	Area Name	Area	Length	Density	Quantity	Sub Total
10	Steel, Mild		$ 2.25	0.041	kg			Square area, 36mm side	1.30E-03	0.004	7850	1	$ 0.09
												Sub Total	**$ 0.09**

ItemOrder	Process	Use	UnitCost	Unit	Quantity	Multiplier	Mult. Val.	Sub Total
10	Machining Setup, Install and remove	Setup for laser cutting	$ 1.30	unit	1	2 parts cut from a single machine setup	0.5	$ 0.65
20	Laser cut	Profile of the part	$ 0.01	cm	16.84	Material - Steel	3	$ 0.51
							Sub Total	**$ 1.16**

Vue isométrique
Echelle : 1:1

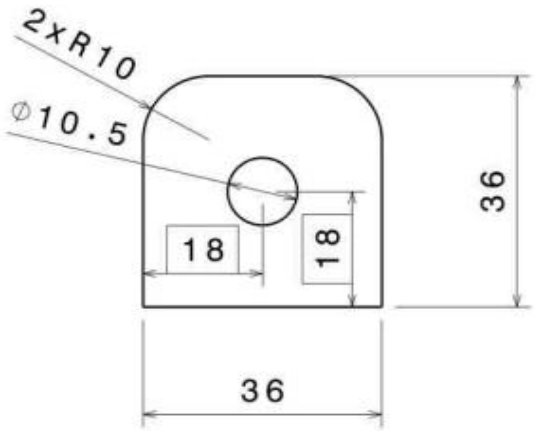

Vue de face
Echelle : 1:1

Vue de gauche
Echelle : 1:1

Taille A4		Ecurie Piston Sport Auto	
Dessiné par Valentin Vie	Date 03/01/2017	Désignation Chape inferieure harnais	
Coordonnées valentin.vie@ecl15.ec-lyon.fr 06.34.28.04.45		Quantité 2	Matériau Acier S235 / Version v1.0
Plan vérifié par RFE		Echelle 1:1	No du plan 17M_I_086_ARN / Feuille 1/1

Ecurie Piston Sport Auto

ÉCOLE CENTRALE LYON

CAR #81

STEERING SYSTEM

University	Ecole Centrale de Lyon	Back to BOM	**Car #**	81	**Asm Cost** $ 92.50
System	Steering System				**Qty** 1
Assembly	Steering System		**FileLink1**		
P/N Base	ST A0001		**FileLink2**		**Extended Cost** $ 92.50
Suffix	AA		**FileLink3**		
Details					

ItemOrder	Part	Part Cost	Quantity	Sub Total
10	First Column tube	$ 2.21	1	$ 2.21
20	Spacer	$ 1.32	1	$ 1.32
30	Steering mount	$ 18.94	1	$ 18.94
40	Second Column tube	$ 5.49	1	$ 5.49
			Sub Total	**$ 27.96**

ItemOrder	Material	Use	UnitCost	Size1	Unit1	Size2	Unit2	Area Name	Area	Length	Density	Quantity	Sub Total
10	Steering Column Universal Joint		$ 20.00									1	$ 20.00
20	Paint	Paint the steering mount	$ 10.00	0.016	m^2							0.016	$ 0.16
20	Bearing, Ball, Radial	Guide the first column	$ 18.71	50	mm	14	mm					2	$ 37.42
												Sub Total	**$ 57.58**

ItemOrder	Process	Use	UnitCost	Unit	Quantity	Multiplier	Mult. Val.	Sub Total
10	Weld	Welding the steering mount on the frame	$ 0.15	cm	18.85			$ 2.83
20	Aerosol Apply	Paint the steering mount	$ 5.25	m²	0.016			$ 0.08
30	Assemble, 1 Kg, Interference	Assemble the bearings to the mount	$ 0.19	unit	2			$ 0.38
40	Assemble, 1 Kg, Line-on-Line	Assemble the first column to the bearings	$ 0.13	unit	1			$ 0.13
50	Assemble, 1 Kg, Interference	Put the retaining ring on the 1st column	$ 0.19	unit	1			$ 0.19
60	Assemble, 1 Kg, Line-on-Line	Assemble the joint to the columns	$ 0.13	unit	2			$ 0.26
70	Hand, Tight <= 6.35 mm	Put the pins trough joint and columns	$ 0.50	unit	2			$ 1.00
80	Assemble, 1 Kg, Line-on-Line	Assemble second column, spacer and the rack pinion	$ 0.13	unit	1			$ 0.13
90	Hand, Tight <= 6.35 mm	Put pins trough the whole	$ 0.50	unit	2			$ 1.00
							Sub Total	**$ 6.00**

ItemOrder	Fastener	Use	UnitCost	Size1	Unit1	Size2	Unit2	Quantity	Sub Total
10	Retaining Ring, External	Maintain the bearing	$ 0.10	21	mm			1	$ 0.10
20	Pin, Cotter, Straight	ssemble columns to rack and joint	$ 0.05	1	unit			4	$ 0.20
								Sub Total	**$ 0.30**

ItemOrder	Tooling	Use	UnitCost	Unit	Quantity	PVF	FractionIncluded	Sub Total
10	Welds - Welding Fixture	Welding the steering mount on the frame	$ 500.00	point	4	3000	1	$ 0.67
							Sub Total	**$ 0.67**

University	Ecole Centrale de Lyon		Back to BOM	**Car #**	81	**Part Cost**	$ 2.21
System	Steering System	Drawing :	FileLink1			**Qty**	1
Assembly	Steering System	**FileLink2**		**FileLink1**			
Part	First Column tube	**FileLink3**		**FileLink2**		**Extended Cost**	$ 2.21
P/N Base	ST 01001			**FileLink3**			
Suffix	AA						
Details							

ItemOrder	Material	Use	UnitCost	Size1	Unit1	Size2	Unit2	Area Name	Area	Length	Density	Quantity	Sub Total
10	Aluminum, Normal (per kg)	Stock for First column tube	$ 4.20	0.216	kg			annulus. Diam exterior 22mm thickness 1,5mm	9.66E-05	0.285	7850	1	$ 0.91
												Sub Total	**$ 0.91**

ItemOrder	Process	Use	UnitCost	Unit	Quantity	Multiplier	Mult. Val.	Sub Total
10	Machining Setup, Install and remove	Setup	$ 1.30	Unit	1			$ 1.30
20	Machining	Holes for assembly with pins	$ 0.04	cm^3	0.126		1	$ 0.01
							Sub Total	**$ 1.31**

Tube apporté par CME le 7 avril

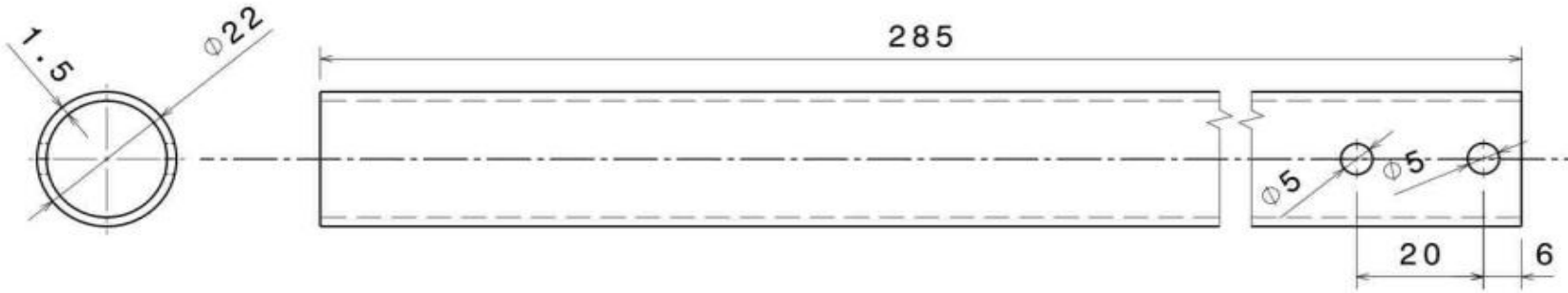

Vue de face
Echelle : 1:1

Vue de gauche
Echelle : 1:1

Tolérances générales : ISO 2768 mK

Taille A4		Ecurie Piston Sport Auto
Dessiné par Paul	Date 04/03/2017	Désignation Colonne de direction
Coordonnées pbegaint@ec-lyon.fr 06 70 50 32 70		Quantité 1 / Matériau Alu / Version 2.0
Plan vérifié par VPY		Echelle 1:1 / N° plan 17M_L_093_COL / Feuille 1/1

University	Ecole Centrale de Lyon		Back to BOM	**Car #**	81	**Part Cost**	$ 1.32
System	Steering System	**FileLink1**				**Qty**	1
Assembly	Steering System	**FileLink2**		**FileLink1**			
Part	Spacer	**FileLink3**		**FileLink2**		**Extended Cost**	$ 1.32
P/N Base	ST 01002			**FileLink3**			
Suffix	AA						
Details							

ItemOrder	Material	Use	UnitCost	Size1	Unit1	Size2	Unit2	Area Name	Area	Length	Density	Quantity	Sub Total
10	Aluminum, Normal (per kg)	stock for spacer	$ 4.20	0.008	kg			Annulus diam 19mm thickness 2mm	3.40E-05	0.03	7850	1	$ 0.01
												Sub Total	**$ 0.01**

ItemOrder	Process	Use	UnitCost	Unit	Quantity	Multiplier	Mult. Val.	Sub Total
10	Machining Setup, Install and remove	Setup	$ 1.30	Unit	1			$ 1.30
20	Machining	Holes for assembly with pins	$ 0.04	cm^3	0.175			$ 0.01
							Sub Total	**$ 1.31**

University	Ecole Centrale de Lyon		Back to BOM	**Car #**	81	**Part Cost**	$ 18.94
System	Steering System	Drawing :	FileLink1			**Qty**	1
Assembly	Steering System		**FileLink2**	**FileLink1**			
Part	Steering mount		**FileLink3**	**FileLink2**		**Extended Cost**	$ 18.94
P/N Base	ST 01003			**FileLink3**			
Suffix	AA						
Details	To carry the steering wheel						

ItemOrder	Material	Use	UnitCost	Size1	Unit1	Size2	Unit2	Area Name	Area	Length	Density	Quantity	Sub Total
10	Steel, Mild	Cylinder holding the Second Column tube	$ 2.25	0.888	kg			Cylinder, 60mm diam.	2.83E-03	0.040	7850	1	$ 2.00
												Sub Total	**$ 2.00**

ItemOrder	Process	Use	UnitCost	Unit	Quantity	Multiplier	Mult. Val.	Sub Total
10	Machining Setup, Install and remove	Setup	$ 1.30	Unit	1			$ 1.30
20	Machining	First bearing housing	$ 0.04	cm^3	97.43	Material - Steel	3	$ 11.69
30	Machining Setup, Change	Return the part	$ 0.65	Unit	1			$ 0.65
40	Machining	Second bearing housing	$ 0.04	cm^3	27.49	Material - Steel	3	$ 3.30
							Sub Total	**$ 16.94**

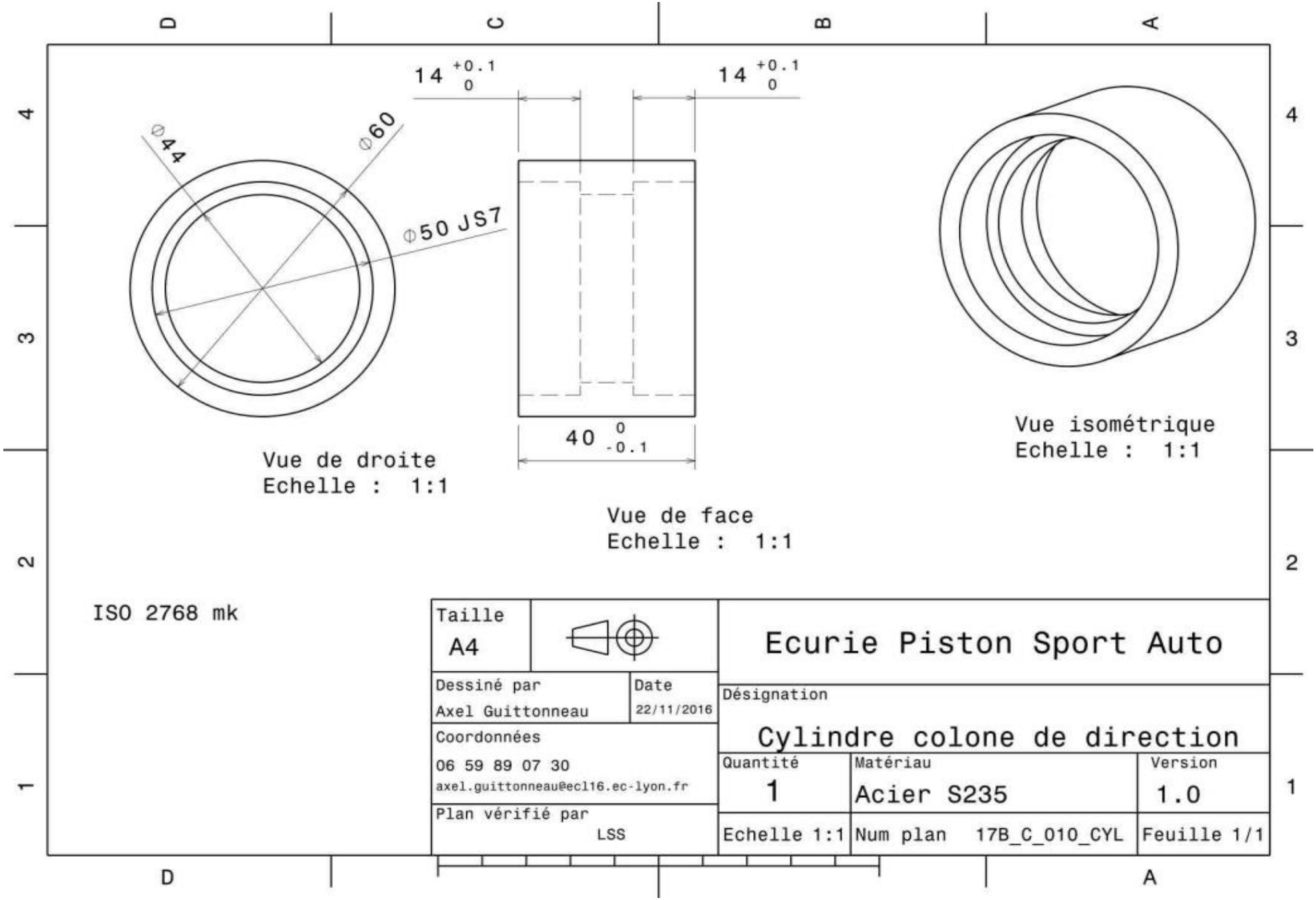
14 +0.1 0
14 +0.1 0
⌀44
⌀60
⌀50 JS7
40 0 -0.1
Vue de droite
Echelle : 1:1
Vue de face
Echelle : 1:1
Vue isométrique
Echelle : 1:1
ISO 2768 mk
Taille
A4
Dessiné par
Axel Guittonneau
Date
22/11/2016
Coordonnées
06 59 89 07 30
axel.guittonneau@ecl16.ec-lyon.fr
Plan vérifié par
LSS
Ecurie Piston Sport Auto
Désignation
Cylindre colone de direction
Quantité
1
Matériau
Acier S235
Version
1.0
Echelle 1:1
Num plan 17B_C_010_CYL
Feuille 1/1

University	Ecole Centrale de Lyon		Back to BOM	**Car #**	81	**Part Cost**	$ 5.49
System	Steering System	Drawing :	FileLink1			**Qty**	1
Assembly	Steering System		**FileLink2**	**FileLink1**			
Part	Second Column tube		**FileLink3**	**FileLink2**		**Extended Cost**	$ 5.49
P/N Base	ST 01004			**FileLink3**			
Suffix	AA						
Details							

ItemOrder	Material	Use	UnitCost	Size1	Unit1	Size2	Unit2	Area Name	Area	Length	Density	Quantity	Sub Total
10	Steel, Mild (per Kg)	Stock for 2nd column tube	$ 2.25	0.537	kg			Annulus diam. 28mm Thickness 6mm	4.15E-04	0.165	7850	1	$ 1.21
												Sub Total	**$ 1.21**

ItemOrder	Process	Use	UnitCost	Unit	Quantity	Multiplier	Mult. Val.	Sub Total
10	Machining Setup, Install and remove	Setup	$ 1.30	Unit	1			$ 1.30
20	Machining	Reduction of radius for bearings + retaining ring and holes	$ 0.04	cm^3	24.86	Material Steel	3	$ 2.98
							Sub Total	**$ 4.28**

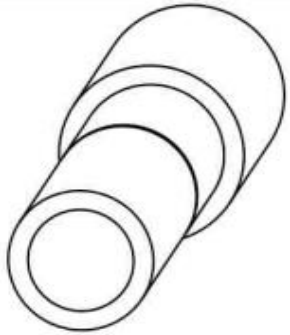

Vue isométrique
Echelle : 1:1

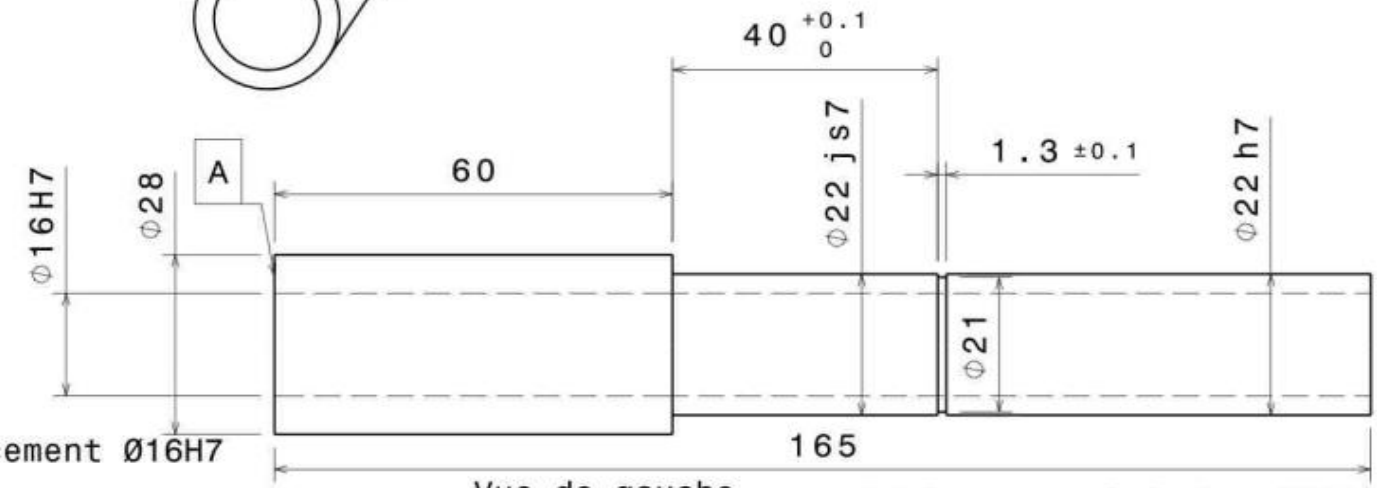

Le tolérancement Ø16H7
s'applique aux premiers 27 mm
en partant du plan
de référence A

Vue de gauche
Echelle : 1:1

Tolérances générales ISO 2768 mk

Taille A4		Ecurie Piston Sport Auto
Dessiné par Axel Guittonneau	Date 05/12/2016	Désignation Raccord de direction
Coordonnées axel.guittonneau @ecl16.ec-lyon.fr 06 59 89 07 30		Quantité 1 / Matériau Acier S235 / Version 1.0
Plan vérifié par LSS		Echelle 1:1 / No du plan 17L_B_071_RAC / Feuille 1/1

University	Ecole Centrale de Lyon	Back to BOM	**Car #**	81	**Asm Cost** $ 74.41
System	Steering System				**Qty** 1
Assembly	Steering Rack Assembly		**FileLink1**		
P/N Base	ST A0002		**FileLink2**		**Extended Cost** $ 74.41
Suffix	AA		**FileLink3**		
Details					

ItemOrder	Part	Part Cost	Quantity	Sub Total
10	Rack	$ 18.04	1	$ 18.04
20	Rack pinion	$ 10.98	1	$ 10.98
30	Rack housing	$ 5.18	1	$ 5.18
40	Lower Rack mount	$ 3.62	2	$ 7.24
50	Upper Rack mount	$ 2.42	2	$ 4.85
60	Rack stop	$ 1.26	2	$ 2.53
70	Rack protection	$ 5.69	1	$ 5.69
			Sub Total	**$ 54.51**

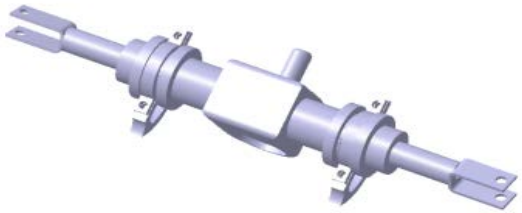

ItemOrder	Material	Use	UnitCost	Size1	Unit1	Size2	Unit2	Area Name	Area	Length	Density	Quantity	Sub Total
10	Bearing, Ball, Radial	Guide the pinion	$ 8.57	35	mm	6	mm					1	$ 8.57
20	Paint	Paint lower mounts	$ 10.00	0.01	m²								$ 0.10
30	Grease Nipple, Straight	Grease the rack	$ 0.50	1	unit							1	$ 0.50
												Sub Total	**$ 9.17**

ItemOrder	Process	Use	UnitCost	Unit	Quantity	Multiplier	Mult. Val.	Sub Total
10	Weld	Welding of lower mounts	$ 0.15	cm	2			$ 0.30
20	Aerosol Apply	Paint lower mounts	$ 5.25	m²	0.005	Repeat 2	2	$ 0.05
30	Assemble, 1kg, Line-on-Line	Assemble the rack inside the housing	$ 0.13	unit	1			$ 0.13
40	Assemble, 1kg, Line-on-Line	Assemble the pinion, the bearing, the grease and the retaining ring inside the housing	$ 0.13	unit	1			$ 0.13
50	Assemble, 1kg, Interference	Assemble the rack over lower mounts	$ 0.19	unit	2			$ 0.38
60	Assemble, 1kg, Line-on-Line	Assemble upper mounts	$ 0.13	unit	2			$ 0.26
70	Ratchet <= 6,35 mm	Lock the rack	$ 0.50	unit	4			$ 2.00
80	Reaction tool <= 6,35 mm	Reaction tool for process 70	$ 0.25	unit	4			$ 1.00
90	Assemble, 1kg, Loose	Assemble rack protection	$ 0.13	unit	1			$ 0.13
100	Ratchet <= 6,35 mm	Put the bolts to lock the rack protection	$ 0.50	unit	4			$ 2.00
110	Reaction tool <= 6,35 mm	Tighten the nut	$ 0.25	unit	4			$ 1.00
120	Ratchet <= 6,35 mm	Put the bolts to lock the rack stops	$ 0.50	unit	2			$ 1.00
130	Reaction tool <= 6,35 mm	Tighten the nut	$ 0.25	unit	2			$ 0.50
							Sub Total	**$ 8.88**

ItemOrder	Fastener	Use	UnitCost	Size1	Unit1	Size2	Unit2	Quantity	Sub Total
10	Retaining Ring, External	Maintain the pinion inside the rack housing	$ 0.23	35	mm			1	$ 0.23
20	Bolt, Grade 8.8 (SAE 5)	Process 70 and 100	$ 0.10	8	mm	25	mm	6	$ 0.60
30	Nut, Grade 8.8 (SAE 5)	Process 70	$ 0.04	8	mm			4	$ 0.18
40	Bolt, Grade 8.8 (SAE 5)	Process 120	$ 0.02	4	mm	20	mm	4	$ 0.09
50	Nut, Grade 8.8 (SAE 5)	Process 120	$ 0.02	4	mm			4	$ 0.08
								Sub Total	**$ 1.17**

ItemOrder	Tooling	Use	UnitCost	Unit	Quantity	PVF	FractionIncluded	Sub Total

University	Ecole Centrale de Lyon		Back to BOM	**Car #**	81	**Part Cost**	$ 18.04
System	Steering System	Drawing :	FileLink1			**Qty**	1
Assembly	Steering Rack Assembly		**FileLink2**	**FileLink1**			
Part	Rack		**FileLink3**	**FileLink2**		**Extended Cost**	$ 18.04
P/N Base	ST 02001			**FileLink3**			
Suffix	AA						
Details							

ItemOrder	Material	Use	UnitCost	Size1	Unit1	Size2	Unit2	Area Name	Area	Length	Density	Quantity	Sub Total
10	Steel, Stainless (per kg)	Rack	$ 2.25	0.774	kg			Circular area, 20mm diameter	3.14E-04	0.314	7850	1	$ 1.74
												Sub Total	**$ 1.74**

ItemOrder	Process	Use	UnitCost	Unit	Quantity	Multiplier	Mult. Val.	Sub Total
10	Drilled holes	Holes for tie rod assembling	$ 0.35	hole	2		1	$ 0.70
20	Threading, Internal (machining)		$ 0.10	cm	3	Repeat 2	2	$ 0.60
30	Broach, External	Teeth machining	$ 0.50	cm	30			$ 15.00
							Sub Total	**$ 16.30**

Vue de face
Echelle : 1:1

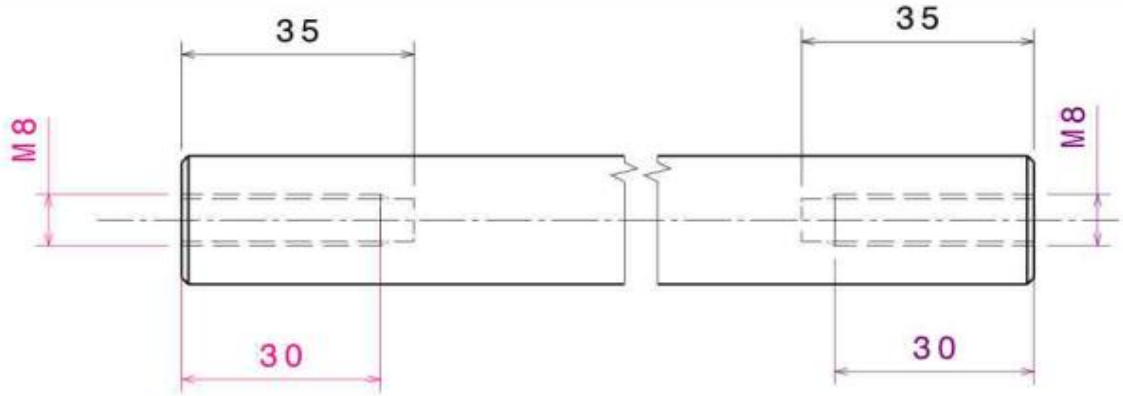

Vue de gauche
Echelle : 1:1

Barreau de crémaillère à percer + tarauder en M8 pas standard de chaque côté

Tolérances générales ISO 2768mK

Taille A4		Ecurie Piston Sport Auto
Dessiné par Paul	Date 04/03/2017	Désignation: Barreau de crémaillère réusiné
Coordonnées pbegaint@ec-lyon.fr 06 70 50 32 70		Quantité 1 / Matériau Acier / Version 1.0
Plan vérifié par VPY		Echelle 1:1 / N plan 17B_L_117_BAR / Feuille 1/1

University	Ecole Centrale de Lyon		Back to BOM	**Car #**	81	**Part Cost**	$ 10.98
System	Steering System	**FileLink1**				**Qty**	1
Assembly	Steering Rack Assembly	**FileLink2**		**FileLink1**			
Part	Rack pinion	**FileLink3**		**FileLink2**		**Extended Cost**	$ 10.98
P/N Base	ST 02002			**FileLink3**			
Suffix	AA						
Details	Bought part, cost as made						

ItemOrder	Material	Use	UnitCost	Size1	Unit1	Size2	Unit2	Area Name	Area	Length	Density	Quantity	Sub Total
10	Steel, Mild (per kg)	Stock for the pinion	$ 2.25	0.770	kg			Circular area diam. 50mm	1.96E-03	0.05	7850	1	$ 1.73
												Sub Total	**$ 1.73**

ItemOrder	Process	Use	UnitCost	Unit	Quantity	Multiplier	Mult. Val.	Sub Total
10	Machining Setup, Install and remove	Holes for tie rod assembling	$ 1.30	Unit	1			$ 1.30
20	Machining	Machining the form to insert colum	$ 0.04	cm^3	50	Material Steel	3	$ 6.00
30	Broach, external	Teeth machining	$ 0.50	cm	2.5			$ 1.25
40	Drilled holes	Holes for tie rod assembling	$ 0.35	hole	2		1	$ 0.70
							Sub Total	**$ 9.25**

University	Ecole Centrale de Lyon		Back to BOM	**Car #**	81	**Part Cost**	$ 5.18
System	Steering System	**FileLink1**				**Qty**	1
Assembly	Steering Rack Assembly	**FileLink2**		**FileLink1**			
Part	Rack housing	**FileLink3**		**FileLink2**		**Extended Cost**	$ 5.18
P/N Base	ST 02003			**FileLink3**			
Suffix	AA						
Details	Bought part, cost as made						

ItemOrder	Material	Use	UnitCost	Size1	Unit1	Size2	Unit2	Area Name	Area	Length	Density	Quantity	Sub Total
10	Aluminium, normal (per kg)	Material for the rack housing	$ 4.20	0.3	kg							1	$ 1.26
												Sub Total	**$ 1.26**

ItemOrder	Process	Use	UnitCost	Unit	Quantity	Multiplier	Mult. Val.	Sub Total
10	Die casting	Housing casting	$ 4.00	kg	0.3			$ 1.20
20	Machining Setup, Install and remove		$ 1.30	Unit	1			$ 1.30
30	Machining	Machining making proper surfaces	$ 0.04	cm^3	18		1	$ 0.72
40	Broach, external	Reamed hole for the rack translation	$ 0.35	cm	2.0			$ 0.70
							Sub Total	**$ 3.92**

University	Ecole Centrale de Lyon		Back to BOM	**Car #**	81	**Part Cost**	$ 3.62
System	Steering System	Drawing :	FileLink1			**Qty**	2
Assembly	Steering Rack Assembly		**FileLink2**	**FileLink1**			
Part	Lower Rack mount		**FileLink3**	**FileLink2**		**Extended Cost**	$ 7.24
P/N Base	ST 02004			**FileLink3**			
Suffix	AA						
Details							

ItemOrder	Material	Use	UnitCost	Size1	Unit1	Size2	Unit2	Area Name	Area	Length	Density	Quantity	Sub Total
10	Steel, Mild (per kg)	Stock	$ 2.25	0.432	kg			Rectangular area, 51x90 mm	4.590E-03	0.012	7850	1	$ 0.97
												Sub Total	**$ 0.97**

ItemOrder	Process	Use	UnitCost	Unit	Quantity	Multiplier	Mult. Val.	Sub Total
10	Machining Setup, Install and remove	Setup for laser cut	$ 1.30	Unit	1		1	$ 1.30
20	Laser cut	Outlines	$ 0.01	cm	22	Material - Steel	3	$ 0.65
30	Drilled holes < 25.4 mm dia.	holes	$ 0.35	hole	2.0		1	$ 0.70
							Sub Total	**$ 2.65**

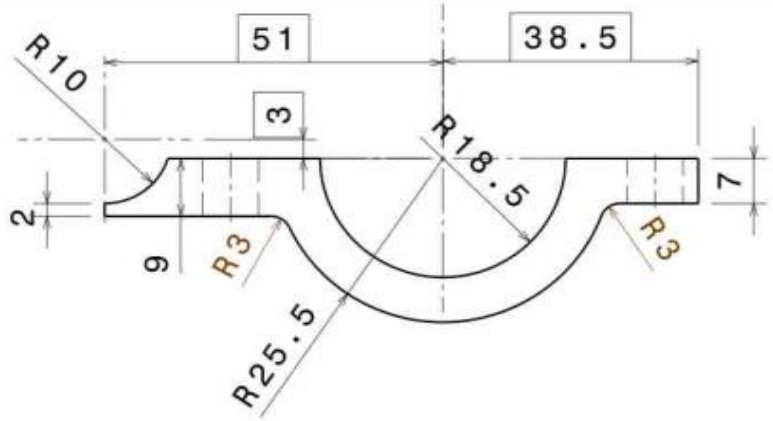

Tolérances générales ISO 2768mK

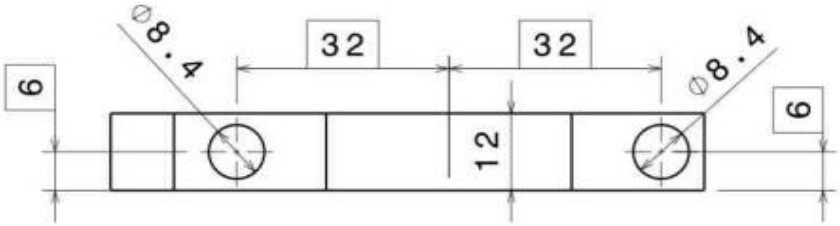

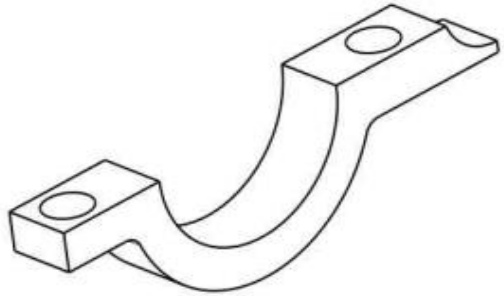

Taille A4		Ecurie Piston Sport Auto	
Dessiné par PBT	Date 17/02/2017	Désignation chape crémaillère bas	
Coordonnées pbegaint@ec-lyon.fr 06 70 50 32 70		Quantité 2	Matériau Acier S235	Version 4.1
Plan vérifié par RFE		Echelle 1:1	N plan 17M_L_025_CHP	Feuille 1/1

University	Ecole Centrale de Lyon		Back to BOM	**Car #**	81	**Part Cost**	$ 2.42
System	Steering System	Drawing :	FileLink1			**Qty**	2
Assembly	Steering Rack Assembly		**FileLink2**	**FileLink1**			
Part	Upper Rack mount		**FileLink3**	**FileLink2**		**Extended Cost**	$ 4.85
P/N Base	ST 02005			**FileLink3**			
Suffix	AA						
Details							

ItemOrder	Material	Use	UnitCost	Size1	Unit1	Size2	Unit2	Area Name	Area	Length	Density	Quantity	Sub Total
10	Aluminium, normal (per kg)	Stock	$ 4.20	0.054	kg			Rectangular area, 21.5*77 mm	1.66E-03	0.012	2712	1	$ 0.23
												Sub Total	**$ 0.23**

ItemOrder	Process	Use	UnitCost	Unit	Quantity	Multiplier	Mult. Val.	Sub Total
10	Machining Setup, Install and remove	Setup for laser cut	$ 1.30	Unit	1		1	$ 1.30
20	Laser cut	Outlines	$ 0.01	cm	20		1	$ 0.20
30	Drilled holes	holes	$ 0.35	hole	2		1	$ 0.70
							Sub Total	**$ 2.20**

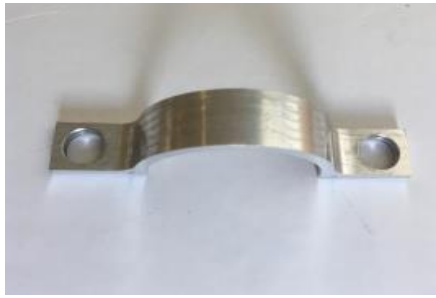

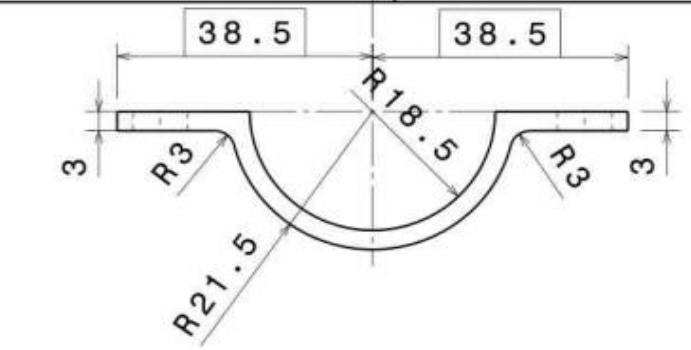

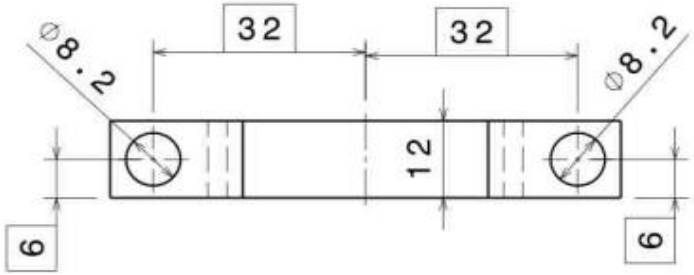

Tolérances générales ISO 2768mK

Taille A4		Ecurie Piston Sport Auto
Dessiné par PBT	Date 17/02/2017	Désignation chape haut crémaillère
Coordonnées pbegaint@ec-lyon.fr 06 70 50 32 70		Quantité 2 / Matériau Aluminium 2017 T4 / Version 5.0
Plan vérifié par RFE		Echelle 1:1 / N plan 17M_L_024_CHP / Feuille 1/1

University	Ecole Centrale de Lyon		Back to BOM	**Car #**	81	**Part Cost**	$	1.26
System	Steering System	Drawing :	FileLink1			**Qty**		2
Assembly	Steering Rack Assembly		**FileLink2**	**FileLink1**				
Part	Rack stop		**FileLink3**	**FileLink2**		**Extended Cost**	$	2.53
P/N Base	ST 02006			**FileLink3**				
Suffix	AA							
Details								

ItemOrder	Material	Use	UnitCost	Size1	Unit1	Size2	Unit2	Area Name	Area	Length	Density	Quantity	Sub Total
10	Steel, Mild (per kg)	Stock	$ 2.25	0.040	kg			rectangular area, 20x102 mm	2.04E-03	2.50E-03	7850	1	$ 0.09
												Sub Total	**$ 0.09**

ItemOrder	Process	Use	UnitCost	Unit	Quantity	Multiplier	Mult. Val.	Sub Total
10	Machining Setup, Install and remove	Setup for laser cut	$ 1.30	Unit	1	2 parts cut from a single machine setup	0.5	$ 0.65
20	Laser cut	holes	$ 0.01	cm	2		1	$ 0.02
30	Sheet metal bends	bend	$ 0.25	bend	2		1	$ 0.50
							Sub Total	**$ 1.17**

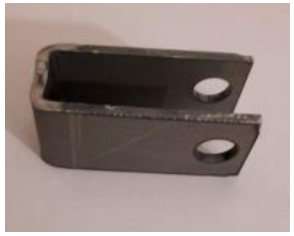

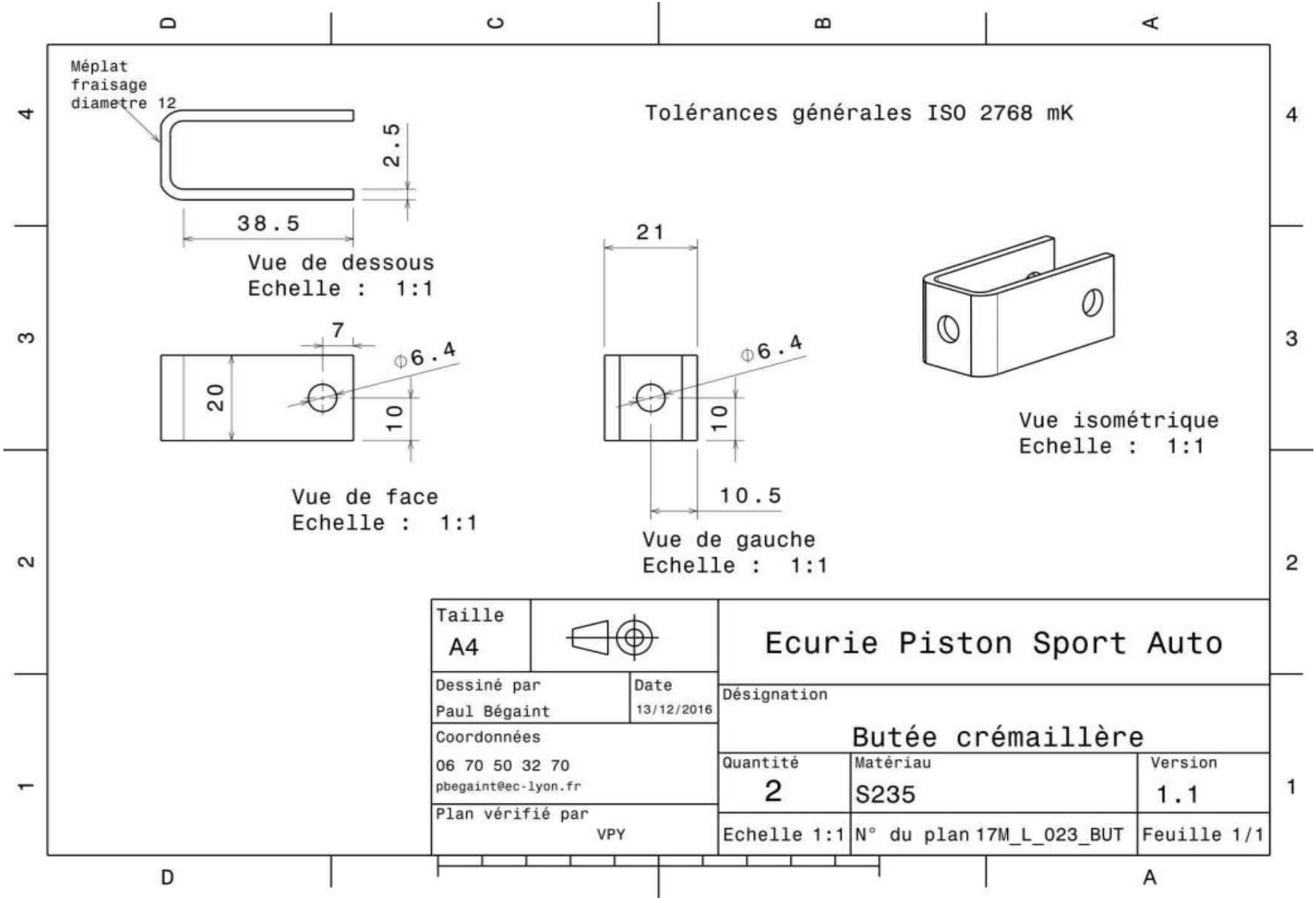
Méplat
fraisage
diametre 12
2.5
38.5
Vue de dessous
Echelle : 1:1
Tolérances générales ISO 2768 mK
7
⌀6.4
20
10
Vue de face
Echelle : 1:1
21
⌀6.4
10
10.5
Vue de gauche
Echelle : 1:1
Vue isométrique
Echelle : 1:1
Taille
A4
Ecurie Piston Sport Auto
Dessiné par
Paul Bégaint
Date
13/12/2016
Désignation
Butée crémaillère
Coordonnées
06 70 50 32 70
pbegaint@ec-lyon.fr
Quantité
2
Matériau
S235
Version
1.1
Plan vérifié par
VPY
Echelle 1:1
N° du plan 17M_L_023_BUT
Feuille 1/1

University	Ecole Centrale de Lyon		Back to BOM	**Car #**	81	**Part Cost**	$ 5.69
System	Steering System	Drawing :	FileLink1			**Qty**	1
Assembly	Steering Rack Assembly		**FileLink2**	**FileLink1**			
Part	Rack Protection		**FileLink3**	**FileLink2**		**Extended Cost**	$ 5.69
P/N Base	ST 02007			**FileLink3**			
Suffix	AA						
Details	To protect the rack						

ItemOrder	Material	Use	UnitCost	Size1	Unit1	Size2	Unit2	Area Name	Area	Length	Density	Quantity	Sub Total
10	Aluminium, normal (per kg)	Stock	$ 4.20	0.499	kg			rectangular area, 400x460 mm	1.84E-01	0.001	2712	1	$ 2.10
												Sub Total	**$ 2.10**

ItemOrder	Process	Use	UnitCost	Unit	Quantity	Multiplier	Mult. Val.	Sub Total
10	Machining Setup, Install and remove	Setup for laser cut	$ 1.30	Unit	1		1	$ 1.30
20	Laser cut	holes and sketch	$ 0.01	cm	129		1	$ 1.29
30	Sheet metal bends	bend	$ 0.25	bend	4		1	$ 1.00
							Sub Total	**$ 3.59**

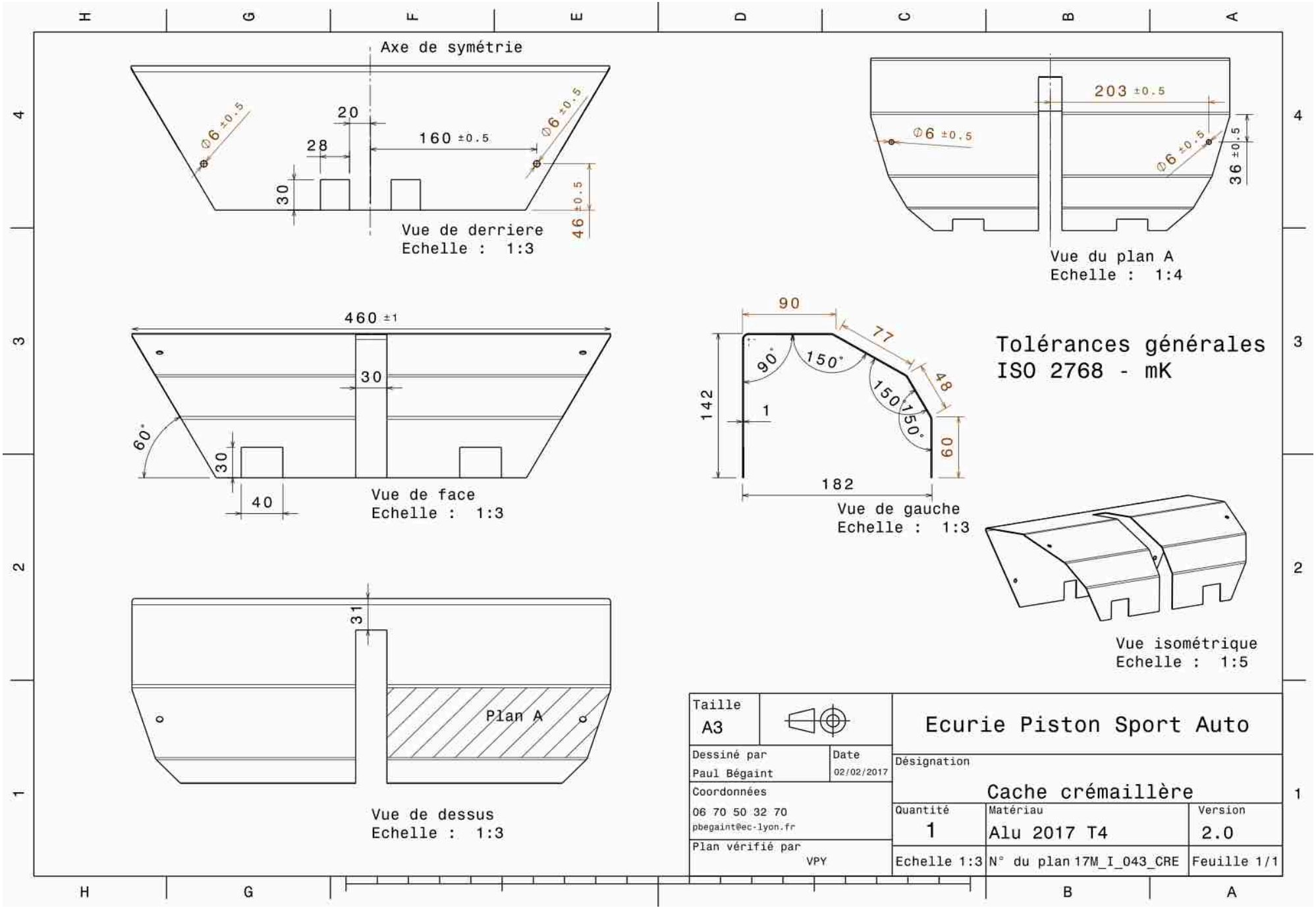
Axe de symétrie
Ø6 ±0.5
20
28
160 ±0.5
Ø6 ±0.5
30
46 ±0.5
Vue de derriere
Echelle : 1:3
203 ±0.5
Ø6 ±0.5
Ø6 ±0.5
36 ±0.5
Vue du plan A
Echelle : 1:4
460 ±1
30
60°
30
40
Vue de face
Echelle : 1:3
90
77
90°
150°
48
142
1
150°
150°
60
182
Vue de gauche
Echelle : 1:3
Tolérances générales
ISO 2768 - mK
31
Plan A
Vue de dessus
Echelle : 1:3
Vue isométrique
Echelle : 1:5
Taille
A3
Ecurie Piston Sport Auto
Dessiné par
Paul Bégaint
Date
02/02/2017
Désignation
Cache crémaillère
Coordonnées
06 70 50 32 70
pbegaint@ec-lyon.fr
Quantité
1
Matériau
Alu 2017 T4
Version
2.0
Plan vérifié par
VPY
Echelle 1:3
N° du plan 17M_I_043_CRE
Feuille 1/1

University	Ecole Centrale de Lyon	Back to BOM	**Car #**	81	**Asm Cost** $ 83.09
System	Steering System				**Qty** 1
Assembly	Quick Release		**FileLink1**		
P/N Base	ST A0003		**FileLink2**		**Extended Cost** $ 83.09
Suffix	AA		**FileLink3**		
Details	Bought part, cost as made				

ItemOrder	Part	Part Cost	Quantity	Sub Total
10	Quick Release Steel Sleeve	$ 32.83	1	$ 32.83
20	Quick Release Fixed Part	$ 34.47	1	$ 34.47
30	Quick Release Sliding Part	$ 12.94	1	$ 12.94
			Sub Total	**$ 80.24**

ItemOrder	Material	Use	UnitCost	Size1	Unit1	Size2	Unit2	Area Name	Area	Length	Density	Quantity	Sub Total
10	Spring	Compression enabled	$ 1.00									1	$ 1.00
20	Ball Bearing	Quick Release locking	$ 0.06									4	$ 0.24
												Sub Total	**$ 1.24**

ItemOrder	Process	Use	UnitCost	Unit	Quantity	Multiplier	Mult. Val.	Sub Total
10	Assemble, 1 kg, Interference	Assembling of Sliding and Fixed Pard	$ 0.19	unit	1		1	$ 0.19
20	Assemble, 1 kg, Line-on-Line	Assembling of the Steel Sleeve and the Fixed part	$ 0.13	unit	1		1	$ 0.13
30	Weld	Welding the Steel Sleeve on the First Column Tube	$ 0.15	cm	6.28		1	$ 0.94
							Sub Total	**$ 1.26**

ItemOrder	Fastener	Use	UnitCost	Size1	Unit1	Size2	Unit2	Quantity	Sub Total
10	Retaining Ring, Internal	Locking of the quick release	$ 0.18	30	mm			1	$ 0.18
								Sub Total	**$ 0.18**

ItemOrder	Tooling	Use	UnitCost	Unit	Quantity	PVF	FractionIncluded	Sub Total
10	Welds - Welding Fixture	Steel Sleeve welded on First Volumn Tube	$ 500.00	point	1	3000	1	$ 0.17
							Sub Total	**$ 0.17**

University	Ecole Centrale de Lyon		Back to BOM	**Car #**	81	**Part Cost**	$ 32.83
System	Steering System	**FileLink1**				**Qty**	1
Assembly	Quick Release	**FileLink2**		**FileLink1**			
Part	Quick Release Steel Sleeve	**FileLink3**		**FileLink2**		**Extended Cost**	$ 32.83
P/N Base	ST 03001			**FileLink3**			
Suffix	AA						
Details							

ItemOrder	Material	Use	UnitCost	Size1	Unit1	Size2	Unit2	Area Name	Area	Length	Density	Quantity	Sub Total
10	Steel, Mild (per kg)	Stock for the part	$ 2.25	0.482	kg			Circular area, diam. 25mm	4.91E-04	0.125	7850	1	$ 1.08
												Sub Total	**$ 1.08**

ItemOrder	Process	Use	UnitCost	Unit	Quantity	Multiplier	Mult. Val.	Sub Total
10	Machining Setup, Install and remove	Setup for machining	$ 1.30	Unit	1			$ 1.30
20	Machining	Material removal, radius	$ 0.04	cm^3	49	Material : Steel	3	$ 5.88
30	Machining	Material removal, lenght	$ 0.04	cm^3	2.45	Material : Steel	3	$ 0.29
40	Machining Setup, Change	Prepare the machine for shoulder 1	$ 0.65	Unit	1		1	$ 0.65
50	Machining	Shoulder 1	$ 0.04	cm^3	5.53	Material : Steel	3	$ 0.66
60	Machining Setup, Change	Prepare the machine for shoulder 2	$ 0.65	Unit	1		1	$ 0.65
70	Machining	Shoulder 2	$ 0.04	cm^3	5.53	Material : Steel	3	$ 0.66
80	Machining Setup, Change	Prepare setup broaching machine	$ 0.65	Unit	1		1	$ 0.65
90	Broach, External	Broaching the splines	$ 0.50	cm	42			$ 21.00
100	Anodize	Hard Anodizing	$ -					$ -
							Sub Total	**$ 31.75**

University	Ecole Centrale de Lyon			**Car #**	81	**Part Cost**	$ 34.47
System	Steering System	**FileLink1**	Back to BOM			**Qty**	1
Assembly	Quick Release	**FileLink2**		**FileLink1**			
Part	Quick Release Fixed Part	**FileLink3**		**FileLink2**		**Extended Cost**	$ 34.47
P/N Base	ST 03002			**FileLink3**			
Suffix	AA						
Details							

ItemOrder	Material	Use	UnitCost	Size1	Unit1	Size2	Unit2	Area Name	Area	Length	Density	Quantity	Sub Total
10	Aluminium, normal (per kg)	Stock	$ 4.20	0.590	kg			Circular area diam. 71mm	3.96E-03	0.055	2712	1	$ 2.48
												Sub Total	**$ 2.48**

ItemOrder	Process	Use	UnitCost	Unit	Quantity	Multiplier	Mult. Val.	Sub Total
10	Machining Setup, Install and remove	Setup for machining	$ 1.30	Unit	1			$ 1.30
20	Machining	Material removal	$ 0.04	cm^3	151	Material : Aluminum	1	$ 6.04
30	Machining Setup, Install and remove	Driller setup	$ 1.30	Unit	1			$ 1.30
40	Drilled holes < 25.4 mm dia.		$ 0.35	Unit	3			$ 1.05
50	Machining Setup, Install and remove	Driller setup	$ 1.30	Unit	1			$ 1.30
60	Broach, Internal	Internal Splines	$ 0.50	cm^3	42			$ 21.00
70	Anodize	Hard anodizing	$ -					$ -
							Sub Total	**$ 31.99**

University	Ecole Centrale de Lyon		Back to BOM	**Car #**	81	**Part Cost**	$ 12.94
System	Steering System	**FileLink1**				**Qty**	1
Assembly	Quick Release	**FileLink2**		**FileLink1**			
Part	Quick Release Sliding Part	**FileLink3**		**FileLink2**		**Extended Cost**	$ 12.94
P/N Base	ST 03003			**FileLink3**			
Suffix	AA						
Details							

ItemOrder	Material	Use	UnitCost	Size1	Unit1	Size2	Unit2	Area Name	Area	Length	Density	Quantity	Sub Total
10	Aluminium, normal (per kg)	Stock	$ 4.20	0.422	kg			Circular area diam. 60mm	2.83E-03	0.055	2712	1	$ 1.77
												Sub Total	**$ 1.77**

ItemOrder	Process	Use	UnitCost	Unit	Quantity	Multiplier	Mult. Val.	Sub Total
10	Machining Setup, Install and remove	Setup for machining	$ 1.30	Unit	1			$ 1.30
20	Machining	Material removal	$ 0.04	cm^3	168	Material : Aluminum	1	$ 6.72
30	Drilled holes < 25.4 mm dia.	drill 9 holes	$ 0.35	Unit	9			$ 3.15
40	Anodize	Hard anodizing	Free					
							Sub Total	**$ 11.17**

University	Ecole Centrale de Lyon	Back to BOM	**Car #**	81	**Asm Cost** $ 43.16
System	Steering System				**Qty** 1
Assembly	Steering Wheel		**FileLink1**		
P/N Base	ST A0004		**FileLink2**		**Extended Cost** $ 43.16
Suffix	AA		**FileLink3**		
Details					

ItemOrder	Part	Part Cost	Quantity	Sub Total
10	Steering Wheel	$ 16.34	1	$ 16.34
20	Shift plates	$ 1.03	2	$ 2.07
30	Bottom shift plates mount	$ 2.30	2	$ 4.59
40	Shift plate mount	$ 1.93	2	$ 3.86
50	Shift plate sensor mount	$ 1.32	2	$ 2.65
60	Aluminium spacer	$ 3.07	1	$ 3.07
			Sub Total	**$ 32.58**

ItemOrder	Process	Use	UnitCost	Unit	Quantity	Multiplier	Mult. Val.	Sub Total
10	Ratchet <= 6,35 mm	Assemble shift plates and shift plate mount x2	$ 0.50	unit	2		1	$ 1.00
20	Reaction tool <= 6,35 mm	Tighten the nuts	$ 0.25	unit	2		1	$ 0.50
30	Ratchet <= 6,35 mm	Assemble shift plates bottom mount and shift plate sensor mount and steering wheel	$ 0.50	unit	4		1	$ 2.00
40	Reaction tool <= 6,35 mm	Tighten the nuts	$ 0.25	unit	4		1	$ 1.00
50	Ratchet <= 6,35 mm	Assemble the sensor on sensor mount	$ 0.50	unit	2		1	$ 1.00
60	Reaction tool <= 6,35 mm	Tighten the nuts	$ 0.25	unit	2		1	$ 0.50
70	Ratchet <= 6,35 mm	Assemble Shift plate to bottom shift plate mount	$ 0.50	unit	2		1	$ 1.00
80	Reaction tool <= 6,35 mm	Tighten the nuts	$ 0.25	unit	2		1	$ 0.50
90	Ratchet <= 6,35 mm	Assemble steering wheel to the quick release throught the spacer	$ 0.50	unit	3		1	$ 1.50
100	Reaction tool <= 6,35 mm	Tighten the nuts	$ 0.25	unit	3		1	$ 0.75
							Sub Total	**$ 9.75**

ItemOrder	Fastener	Use	UnitCost	Size1	Unit1	Size2	Unit2	Quantity	Sub Total
10	Bolt, Grade 8.8 (SAE 5)	fasten stearing wheel to quick release	$ 0.08	6	mm	35	mm	5	$ 0.39
20	Bolt, Grade 8.8 (SAE 5)	Shift plates assembly	$ 0.01	4	mm	10	mm	6	$ 0.09
30	Bolt, Grade 8.8 (SAE 5)	Shift plates assembly	$ 0.02	4	mm	20	mm	2	$ 0.04
40	Nut, Grade 8.8 (SAE 5)	fasten stearing wheel to quick release	$ 0.03	6	mm			5	$ 0.15
50	Nut, Grade 8.8 (SAE 5)	Shift plates assembly	$ 0.02	4	mm			8	$ 0.16
								Sub Total	**$ 0.83**

University	Ecole Centrale de Lyon		Back to BOM	**Car #**	81	**Part Cost**	$ 16.34
System	Steering System	**FileLink1**				**Qty**	1
Assembly	Steering Wheel	**FileLink2**		**FileLink1**			
Part	Steering Wheel	**FileLink3**		**FileLink2**		**Extended Cost**	$ 16.34
P/N Base	ST 04001			**FileLink3**			
Suffix	AA						
Details	Bought, cost as made						

ItemOrder	Material	Use	UnitCost	Size1	Unit1	Size2	Unit2	Area Name	Area	Length	Density	Quantity	Sub Total
10	Steel, Mild (per kg)	Sheet for the structure 2 mm thickness	$ 2.25	0.903	kg	230		Rectangular area 250mm x 230mm	5.75E-02	0.002	7850	1	$ 2.03
20	Foam, Expanding, Non-Structural (per kg)	Foam for torus form	$ 15.00	0.1	kg								$ 1.50
30	Fabric (per m^2)	steering wheel covering	$ 2.50	0.1	m^2								$ 0.25
40	Adhesive	Steering wheel covering - Cost included in process	$ -		unit								
												Sub Total	**$ 3.78**

ItemOrder	Process	Use	UnitCost	Unit	Quantity	Multiplier	Mult. Val.	Sub Total
10	Machining Setup, Install and remove	Setup for laser cut	$ 1.30	unit	1			$ 1.30
20	Laser Cut	Outline and holes for sheet	$ 0.01	cm	100	Material - Steel	3	$ 3.00
30	Assemble, 1 kg, Line-on-Line	Assemble of foam	$ 0.13	unit	1			$ 0.13
40	Cut (scissors, knife)	Preparation of covering	$ 0.06	cm	100			$ 6.00
50	Liquid Applicator Gun	Apply of covering	$ 0.02	cm	100			$ 2.00
60	Assemble, 1 kg, Line-on-Line	Assemble of covering	$ 0.13	unit	1			$ 0.13
							Sub Total	**$ 12.56**

University	Ecole Centrale de Lyon		Back to BOM	**Car #**	81	**Part Cost**	$ 1.03
System	Steering System	Drawing :	FileLink1			**Qty**	2
Assembly	Steering Wheel	**FileLink2**		**FileLink1**			
Part	Shift plates	**FileLink3**		**FileLink2**		**Extended Cost**	$ 2.07
P/N Base	ST 04002			**FileLink3**			
Suffix	AA						
Details							

ItemOrder	Material	Use	UnitCost	Size1	Unit1	Size2	Unit2	Area Name	Area	Length	Density	Quantity	Sub Total
10	Aluminum, Normal (per kg)	Sheet of aluminium for the shift plate	$ 4.20	0.033	kg			Rectangular area, 80x60 mm	4.80E-03	0.0025	2712	1	$ 0.14
												Sub Total	**$ 0.14**

ItemOrder	Process	Use	UnitCost	Unit	Quantity	Multiplier	Mult. Val.	Sub Total
10	Machining Setup, Install and remove	Install the sheet in the laser cut machine	$ 1.30	Unit	1	2 parts cut from a single machine setup	0.5	$ 0.65
20	Laser cut	Cut the plate	$ 0.01	cm	24.8		1	$ 0.25
							Sub Total	**$ 0.90**

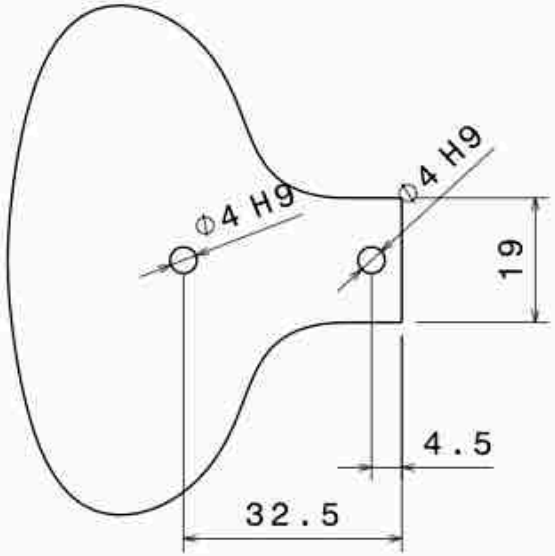

Vue de face
Echelle : 1:1

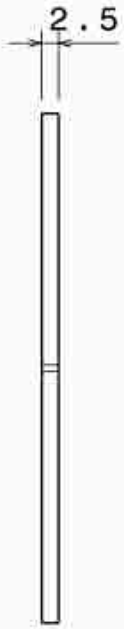

Vue de gauche
Echelle : 1:1

Tolérances générales : ISO 2768mK

Taille A4		Ecurie Piston Sport Auto
Dessiné par William PIERRÉ	Date 07/01/2017	Désignation palette
Coordonnées Tel : 06 88 06 96 96 Mail : wpierre@ec-lyon.fr		Quantité 2 / Matériau alu 2017 / Version 1.0
Plan vérifié par LOD		Echelle 1:1 / N° 17M_I_081_WPE / Feuille 1/1

University	Ecole Centrale de Lyon		Back to BOM	**Car #**	81	**Part Cost**	$ 2.30
System	Steering System	Drawing :	FileLink1			**Qty**	2
Assembly	Steering Wheel		**FileLink2**	**FileLink1**			
Part	Bottom shift plates mount		**FileLink3**	**FileLink2**		**Extended Cost**	$ 4.59
P/N Base	ST 04003			**FileLink3**			
Suffix	AA						
Details							

ItemOrder	Material	Use	UnitCost	Size1	Unit1	Size2	Unit2	Area Name	Area	Length	Density	Quantity	Sub Total
10	Aluminum, Normal (per kg)	Aluminium sheet for the bottom shift plate mount	$ 4.20	0.037	kg			Rectangular area,50x110 mm	5.50E-03	0.0025	2712	1	$ 0.16
												Sub Total	**$ 0.16**

ItemOrder	Process	Use	UnitCost	Unit	Quantity	Multiplier	Mult. Val.	Sub Total
10	Machining Setup, Install and remove	Set up	$ 1.30	Unit	1			$ 1.30
20	Laser cut	Cut the sheet (including holes)	$ 0.01	cm	34		1	$ 0.34
30	Sheet metal bends	Bend	$ 0.25	bend	2		1	$ 0.50
							Sub Total	**$ 2.14**

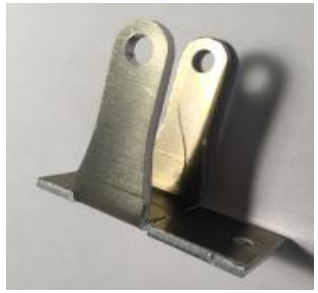

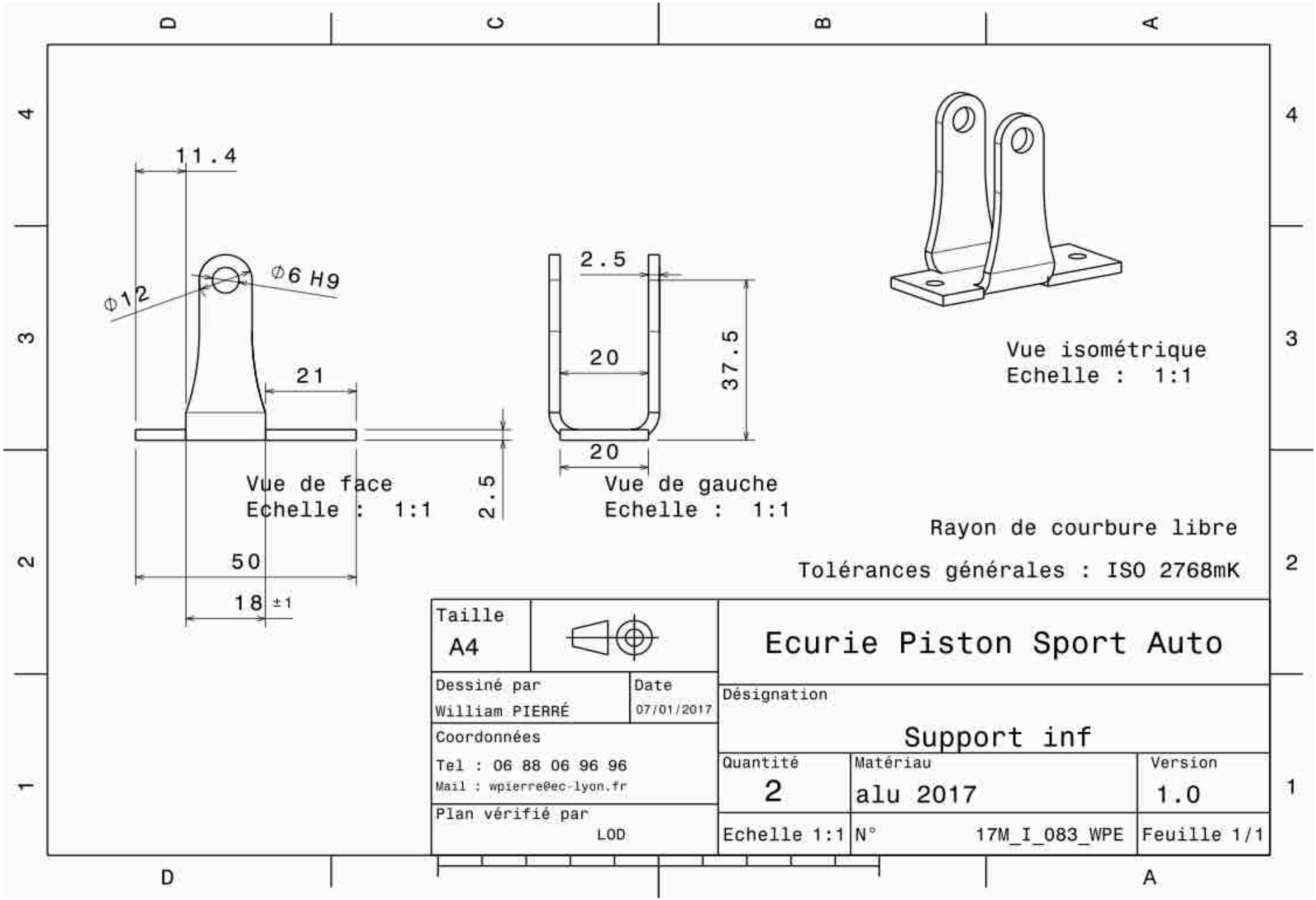
11.4
Ø12
Ø6 H9
21
50
18 ±1
2.5
Vue de face
Echelle : 1:1
2.5
20
37.5
20
Vue de gauche
Echelle : 1:1
Vue isométrique
Echelle : 1:1
Rayon de courbure libre
Tolérances générales : ISO 2768mK
Taille
A4
Ecurie Piston Sport Auto
Dessiné par
William PIERRÉ
Date
07/01/2017
Désignation
Support inf
Coordonnées
Tel : 06 88 06 96 96
Mail : wpierre@ec-lyon.fr
Quantité
2
Matériau
alu 2017
Version
1.0
Plan vérifié par
LOD
Echelle 1:1
N°
17M_I_083_WPE
Feuille 1/1

University	Ecole Centrale de Lyon		Back to BOM	**Car #**	81	**Part Cost**	$ 1.93
System	Steering System	Drawing :	FileLink1			**Qty**	2
Assembly	Steering Wheel		**FileLink2**	**FileLink1**			
Part	Shift plates mount		**FileLink3**	**FileLink2**		**Extended Cost**	$ 3.86
P/N Base	ST 04004			**FileLink3**			
Suffix	AA						
Details							

ItemOrder	Material	Use	UnitCost	Size1	Unit1	Size2	Unit2	Area Name	Area	Length	Density	Quantity	Sub Total
10	Aluminum, Normal (per kg)	Raw for shift plates mount	$ 4.20	0.020	kg			Rectangular area, 36x19 mm	6.84E-04	0.011	2712	1	$ 0.09
												Sub Total	**$ 0.09**

ItemOrder	Process	Use	UnitCost	Unit	Quantity	Multiplier	Mult. Val.	Sub Total
10	Machining Setup, Install and remove	Set up	$ 1.30	Unit	1		1	$ 1.30
20	Machining	Profile and two holes (4mm)	$ 0.04	cm^3	4.9		1	$ 0.20
50	Drilled holes < 25.4 mm dia.	Last hole (6mm)	$ 0.35	Unit	1		1	$ 0.35
							Sub Total	**$ 1.85**

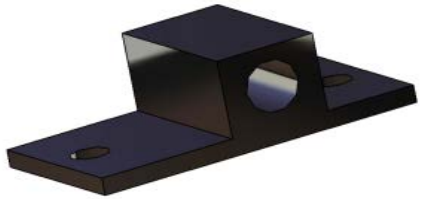

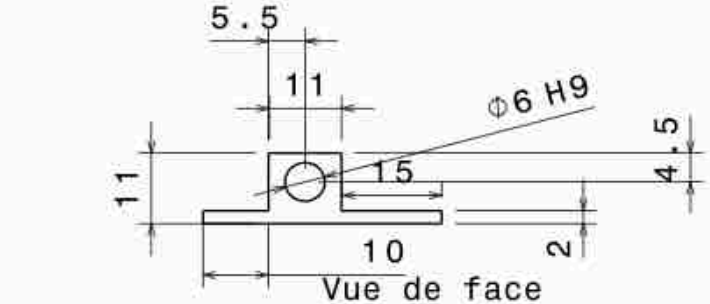

Vue de face
Echelle : 1:1

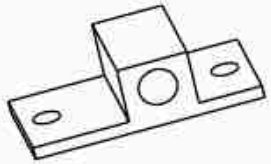

Vue isométrique
Echelle : 1:1

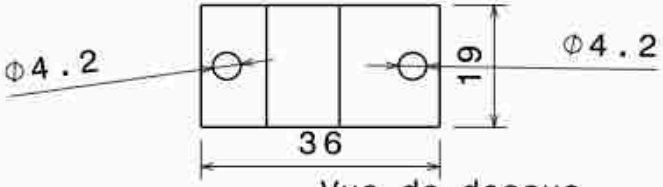

Vue de dessus
Echelle : 1:1

Tolérances générales : ISO 2768mK

Taille A4		Ecurie Piston Sport Auto
Dessiné par William PIERRÉ	Date 07/01/2017	Désignation palettes fixation inf
Coordonnées Tel : 06 88 06 96 96 Mail : wpierre@ec-lyon.fr		Quantité 2 / Matériau alu 2017 / Version 1.0
Plan vérifié par LOD		Echelle 1:1 / N° 17M_I_080_WPE / Feuille 1/1

University	Ecole Centrale de Lyon		Back to BOM	**Car #**	81	**Part Cost**	$ 1.32
System	Steering System	Drawing :	FileLink1			**Qty**	2
Assembly	Steering Wheel	**FileLink2**		**FileLink1**			
Part	Shift plate sensor mount	**FileLink3**		**FileLink2**		**Extended Cost**	$ 2.65
P/N Base	ST 04005			**FileLink3**			
Suffix	AA						
Details							

ItemOrder	Material	Use	UnitCost	Size1	Unit1	Size2	Unit2	Area Name	Area	Length	Density	Quantity	Sub Total
10	Aluminum, Normal (per kg)	Sheet of aluminium for the shift plate	$ 4.20	0.002	kg			Rectangular area, 57x6 mm	3.42E-04	0.002	2712	1	$ 0.01
												Sub Total	**$ 0.01**

ItemOrder	Process	Use	UnitCost	Unit	Quantity	Multiplier	Mult. Val.	Sub Total
10	Machining Setup, Install and remove	Set up	$ 1.30	Unit	1	2 parts cut from a single machine setup	0.5	$ 0.65
20	Laser cut	Cut the sheet (including holes)	$ 0.01	cm	16.5		1	$ 0.17
30	Sheet metal bends	Bend	$ 0.25	bend	2		1	$ 0.50
							Sub Total	**$ 1.32**

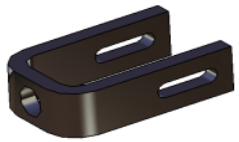

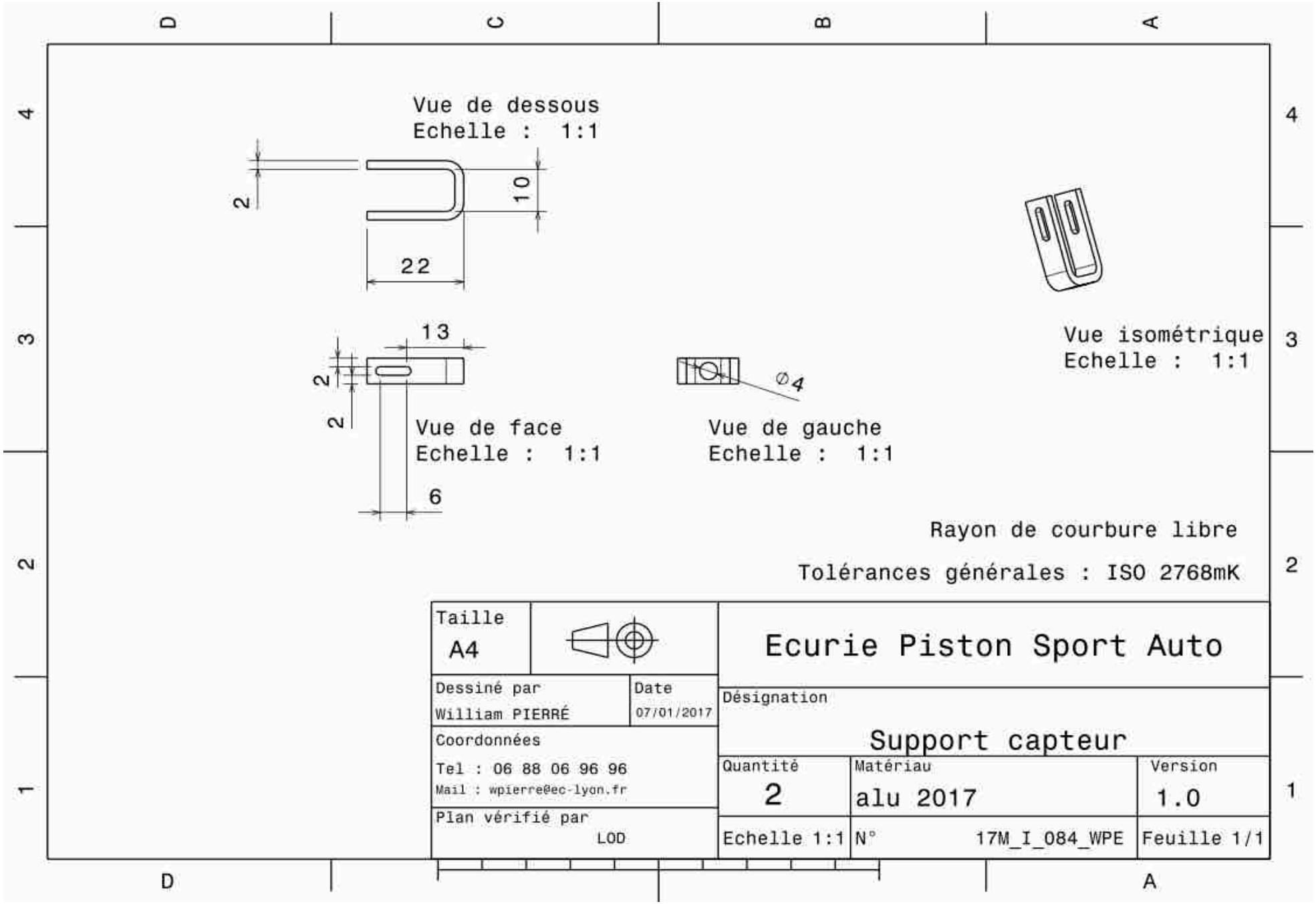
Vue de dessous
Echelle : 1:1
2
10
22
13
2
2
6
Vue de face
Echelle : 1:1
⌀4
Vue de gauche
Echelle : 1:1
Vue isométrique
Echelle : 1:1
Rayon de courbure libre
Tolérances générales : ISO 2768mK
Taille
A4
Ecurie Piston Sport Auto
Dessiné par
William PIERRÉ
Date
07/01/2017
Désignation
Support capteur
Coordonnées
Tel : 06 88 06 96 96
Mail : wpierre@ec-lyon.fr
Quantité
2
Matériau
alu 2017
Version
1.0
Plan vérifié par
LOD
Echelle 1:1
N°
17M_I_084_WPE
Feuille 1/1

University	Ecole Centrale de Lyon		Back to BOM	**Car #**	81	**Part Cost**	$ 3.07
System	Steering System	Drawing :	FileLink1			**Qty**	1
Assembly	Steering Wheel		**FileLink2**	**FileLink1**			
Part	Aluminium spacer		**FileLink3**	**FileLink2**		**Extended Cost**	$ 3.07
P/N Base	ST 04006			**FileLink3**			
Suffix	AA						
Details							

ItemOrder	Material	Use	UnitCost	Size1	Unit1	Size2	Unit2	Area Name	Area	Length	Density	Quantity	Sub Total
10	Aluminum, Normal (per kg)	Sheet of aluminium for the shift plate	$ 4.20	0.148	kg			Rectangular area, 55x55 mm	3.03E-03	0.018	2712	1	$ 0.62
												Sub Total	**$ 0.62**

ItemOrder	Process	Use	UnitCost	Unit	Quantity	Multiplier	Mult. Val.	Sub Total
10	Machining Setup, Install and remove	Set up	$ 1.30	Unit	1		1	$ 1.30
20	Machining	Machining	$ 0.04	cm^3	28.8		1	$ 1.15
							Sub Total	**$ 2.45**

REF.	X	Y	Diamètre
A	-21,65	12,5	6
B	0	-25	6
C	21,65	12,5	6
D	0	0	30

Vue de droite
Echelle : 1:1

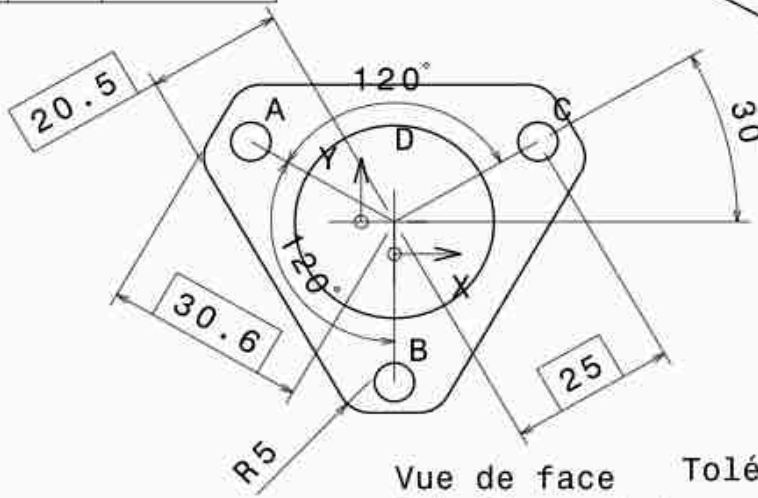

Vue de face
Echelle : 1:1

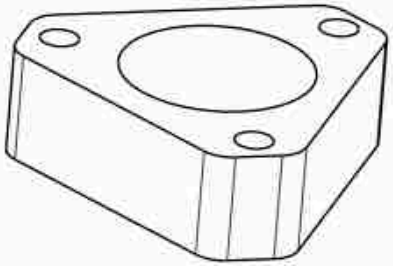

Vue isométrique
Echelle : 1:1

Tolérances générales ISO 2768 mk

Taille A4		Ecurie Piston Sport Auto
Dessiné par Axel Guittonneau	Date 05/12/2016	Désignation Entretoise volant
Coordonnées axel.guittonneau @ecl16.ec-lyon.fr 06 59 89 07 30		Quantité 1 / Matériau Alu 2017 / Version 1.0
Plan vérifié par XXX		Echelle 1:1 / No du plan 17B_L_119_ENT / Feuille 1/1

University	Ecole Centrale de Lyon	Back to BOM	Car #	81	Asm Cost $ 21.47
System	Steering System				Qty 2
Assembly	Tie Rod Assembly		FileLink1		
P/N Base	ST A0005		FileLink2		Extended Cost $ 42.93
Suffix	AA		FileLink3		
Details	Tie Rod for the streering system, left and right are identical				

ItemOrder	Part	Part Cost	Quantity	Sub Total
10	Tie Rod Insert	$ 1.19	2	$ 2.38
20	Tube	$ 0.57	1	$ 0.57
			Sub Total	$ 2.95

ItemOrder	Material	Use	UnitCost	Size1	Unit1	Size2	Unit2	Area Name	Area	Length	Density	Quantity	Sub Total
10	Paint	Tie rod black paint	$ 10.00	0.0315	m^2							1.00	$ 0.32
20	Rod End, Industrial	Right-hand rod end for tie rod extremities	$ 2.50	8	mm			Balls Diameter				1.00	$ 2.50
30	Rod End, Industrial	Left-hand rod end for tie rod extremities	$ 2.50	8	mm			Balls Diameter				1.00	$ 2.50
												Sub Total	$ 5.32

ItemOrder	Process	Use	UnitCost	Unit	Quantity	Multiplier	Mult. Val.	Sub Total
10	Hand finish - surface preparation	Solvent degreasing on tierod tube	$ 0.02	cm^2	30	Material - steel	3	$ 1.80
20	Hand finish - surface preparation	Solvent degreasing on tierod insert	$ 0.02	cm^2	18	Material - steel	3	$ 1.08
30	Weld	Welding the insert to the tube	$ 0.15	cm	4.7	Repeat 2	2	$ 1.41
40	Aerosol apply	Painting of the tie rod in black	$ 5.25	m^2	0.0315		1	$ 0.17
50	Hand - Start Only	Put a nut on the rod end	$ 0.12	unit	2		1	$ 0.24
60	Hand, Loose <= 25.4 mm	Screwing by hand the rod end in the tie rod insert	$ 0.50	unit	2		1	$ 1.00
70	Wrench <= 25.4 mm	Thighten the M8 nuts	$ 1.50	unit	2		1	$ 3.00
80	Reaction tool <= 25.4 mm	Thighten the M8 nuts	$ 0.25	unit	2		1	$ 0.50
90	Assemble, 1kg, Loose	Put the spacers of the stops in place	$ 0.06	unit	2		1	$ 0.12
100	Hand - Start Only	Bolt tierod into the stops	$ 0.12	unit	1		1	$ 0.12
110	Assemble, 1kg, Loose	Put the spacers of the upright lower insert in place	$ 0.06	unit	1		1	$ 0.06
120	Hand - Start Only	Bolt tierod into the upright lower insert	$ 0.12	unit	1		1	$ 0.12
130	Hand - Start Only	Put the nuts into the bolts	$ 0.12	unit	2		1	$ 0.24
140	Ratchet <= 25.4 mm	Thighten the M8 nuts	$ 0.75	unit	2		1	$ 1.50
150	Reaction tool <= 25.4 mm	Thighten the M8 nuts	$ 0.25	unit	2		1	$ 0.50
							Sub Total	$ 11.86

ItemOrder	Fastener	Use	UnitCost	Size1	Unit1	Size2	Unit2	Quantity	Sub Total
10	Bolt, Grade 12.9	Tierod to stops fixing bolt	$ 0.26	8	mm	40	mm	1	$ 0.26
20	Bolt, Grade 12.9	Tierod to Upright lower insert fixing bolt	$ 0.26	8	mm	40	mm	1	$ 0.26
30	Nut, Grade 8.8 (SAE 5)	To tighten the bolts	$ 0.04	8	mm			2	$ 0.08
40	Nut, Grade 8.8 (SAE 5)	To tighten the rod ends	$ 0.04	8	mm			2	$ 0.08
								Sub Total	$ 0.68

ItemOrder	Tooling	Use	UnitCost	Unit	Quantity	PVF	FractionIncluded	Sub Total
10	Welds - Welding Fixture	Welding the insert to the tube	$ 500.00	point	4	3000	1	$ 0.67
							Sub Total	$ 0.67

University	Ecole Centrale de Lyon		Back to BOM	**Car #**	81	**Part Cost**	$ 1.19
System	Steering System	**FileLink1**				**Qty**	2
Assembly	Tie Rod Assembly	**FileLink2**		**FileLink1**			
Part	Tie Rod insert	**FileLink3**		**FileLink2**		**Extended Cost**	$ 2.38
P/N Base	ST 05001			**FileLink3**			
Suffix	AA						
Details							

ItemOrder	Material	Use	UnitCost	Size1	Unit1	Size2	Unit2	Area Name	Area	Length	Density	Quantity	Sub Total
10	Steel, Mild	Material for part	$ 2.25	0.039	kg			Round 16 mm diameter	2.01E-04	0.025	7850	1	$ 0.09
												Sub Total	**$ 0.09**

ItemOrder	Process	Use	UnitCost	Unit	Quantity	Multiplier	Mult. Val.	Sub Total
10	Machining, Setup, Install and remove		$ 1.30	unit	1	4 parts made from a single machine setup	0.25	$ 0.33
20	Machining	Main shape contouring	$ 0.04	cm^3	3.02	Material-Steel	3	$ 0.36
30	Machining, Setup,Change		$ 0.65	unit	1	4 parts made from a single machine setup	0.25	$ 0.16
40	Threading internal (machining)	Part thread	$ 0.10	cm	2.5		1	$ 0.25
							Sub Total	**$ 1.10**

University	Ecole Centrale de Lyon		Back to BOM	**Car #**	81	**Part Cost**	$ 0.57
System	Steering System	**FileLink1**				**Qty**	1
Assembly	Tie Rod Assembly	**FileLink2**		**FileLink1**			
Part	Tube	**FileLink3**		**FileLink2**		**Extended Cost**	$ 0.57
P/N Base	ST 05002			**FileLink3**			
Suffix	AA						
Details							

ItemOrder	Material	Use	UnitCost	Size1	Unit1	Size2	Unit2	Area Name	Area	Length	Density	Quantity	Sub Total
10	Steel, Alloy	Material for tube	$ 2.25	0.154	kg			Round area 15 mm x 1,5 mm	6.36E-05	0.309	7850	1	$ 0.35
												Sub Total	**$ 0.35**

ItemOrder	Process	Use	UnitCost	Unit	Quantity	Multiplier	Mult. Val.	Sub Total
10	Tube cut	Tierod tube	$ 0.15	cm	1.5			$ 0.23
							Sub Total	**$ 0.23**

Ecurie Piston Sport Auto

ÉCOLE CENTRALE LYON

CAR #81

Suspension System

University	Ecole Centrale de Lyon	Back to BOM	**Car #**	81	**Asm Cost** $ 56.04
System	Suspension System				**Qty** 2
Assembly	Lower Front A-Arm		**FileLink1**		
P/N Base	SU A0001		**FileLink2**		**Extended C** $ 112.07
Suffix	AA		**FileLink3**		
Details	Steel A-Arm				

ItemOrder	Part	Part Cost	Quantity	Sub Total
10	Simple Bearing Support	$ 1.75	2	$ 3.51
20	Lower Front Bearing Support	$ 4.00	1	$ 4.00
30	Fore Lower Front A-Arm Tube	$ 2.62	1	$ 2.62
40	Aft Lower Front A-Arm Tube	$ 2.67	1	$ 2.67
50	Spacer on Frame Side	$ 0.20	4	$ 0.81
60	Spacer on Upright Side	$ 0.43	2	$ 0.87
70	Fore A Lower Front A-Arm Mount	$ 1.20	1	$ 1.20
80	Fore B Lower Front A-Arm Mount	$ 1.16	1	$ 1.16
90	Aft A Lower Front A-Arm Mount	$ 1.08	1	$ 1.08
100	Aft B Lower Front A-Arm Mount	$ 1.14	1	$ 1.14
			Sub Total	**$ 19.05**

ItemOrder	Material	Use	UnitCost	Size1	Unit1	Size2	Unit2	Area Name	Area	Length	Density	Quantity	Sub Total
10	Bearing, Spherical	Link to Upright and Frame	$ 6.92	8	mm							3	$ 20.76
20	Paint	Mounts and A-Arm Painting	$ 10.00	0.049	m^2							0.049	$ 0.49
30	Adhesive	Glue for Ball Joint – Cost Included in Processes	$ -										$ -
												Sub Total	**$ 21.25**

ItemOrder	Process	Use	UnitCost	Unit	Quantity	Multiplier	Mult. Val.	Sub Total
10	Weld	Steel Mounts Welding	$ 0.15	cm	19.6			$ 2.94
20	Aerosol Apply	Steel Mounts Painting	$ 5.25	m²	6.19E-03			$ 0.03
30	Weld	Steel Tubes Welding on Ball Joint Supports	$ 0.15	cm	25.6			$ 3.84
40	Brush Apply	Glue Applying on Ball Joint Bores	$ 0.02	cm²	7.5			$ 0.15
50	Assemble, 1kg, Line on Line	Ball Joints in Bores Installation	$ 0.13	Unit	3			$ 0.39
60	Aerosol Apply	A-Arm Painting	$ 5.25	m²	4.05E-02			$ 0.21
70	Assemble,1kg, Loose	A-Arm Positioning on Mounts	$ 0.06	Unit	1			$ 0.06
80	Assemble, 1kg, Line on Line	Spacers Installation on Mounts	$ 0.13	Unit	4			$ 0.52
90	Assemble, 1kg, Line on Line	Washers Installation on Mounts	$ 0.13	Unit	4			$ 0.52
100	Assemble,1kg, Loose	A-Arm Positioning on Upside	$ 0.06	Unit	1			$ 0.06
110	Assemble, 1kg, Line on Line	Spacers Installation on Upside	$ 0.13	Unit	2			$ 0.26
120	Assemble, 1kg, Line on Line	Washers Installation on Upside	$ 0.13	Unit	2			$ 0.26
130	Ratchet <= 25,4mm	M8 Bolts Installation	$ 0.75	Unit	3			$ 2.25
140	Reaction tool <=25,4mm	M8 Nuts Blocking	$ 0.25	Unit	3			$ 0.75
							Sub Total	**$ 12.25**

ItemOrder	Fastener	Use	UnitCost	Size1	Unit1	Size2	Unit2	Quantity	Sub Total
10	Bolt, Grade 8,8 (SAE 5)	A-Arm Fixing Bolts	0.21	8	mm	50	mm	3	$ 0.63
20	Nut, Grade 8,8 (SAE 5)	A-Arm Fixing Nuts	0.04	8	mm			3	$ 0.13
30	Washer, Grade 8,8 (SAE 5)	A-Arm Fixing Washers	0.01	8	mm			6	$ 0.06
								Sub Total	**$ 0.83**

ItemOrder	Tooling	Use	UnitCost	Unit	Quantity	PVF	FractionIncluded	Sub Total
10	Welds - Welding Fixture	Welding Processes	$ 500.00	point	16	3000	1	$ 2.67
							Sub Total	**$ 2.67**

University	Ecole Centrale de Lyon		Back to BOM	**Car #**	81	**Part Cost**	$	1.75
System	Suspension System	Drawing :	FileLink1			**Qty**		2
Assembly	Lower Front A-Arm		**FileLink2**	**FileLink1**				
Part	Simple Bearing Support		**FileLink3**	**FileLink2**		**Extended Cost**	$	3.51
P/N Base	SU 01001			**FileLink3**				
Suffix	AA							
Details								

ItemOrder	Material	Use	UnitCost	Size1	Unit1	Size2	Unit2	Area Name	Area	Length	Density	Quantity	Sub Total
10	Steel, Mild	Material for Part	$ 2.25	0.035	kg			Rectangular 30 x 25 mm	7.50E-04	0.006	7850	1	$ 0.08
												Sub Total	**$ 0.08**

ItemOrder	Process	Use	UnitCost	Unit	Quantity	Multiplier	Mult. Val.	Sub Total
10	Machining Setup, Install and Remove		$ 1.30		1	16 parts made from a single machine setup	0.06	$ 0.08
20	Laser cut	Main shape contouring	$ 0.01	cm	16.7	Material – Steel	3	$ 0.50
30	Machining Setup, Change		$ 0.65		1	16 parts made from a single machine setup	0.06	$ 0.04
40	Reemed hole	Bearing bore Holing	$ 0.35	hole	1	Material – Steel	3	$ 1.05
							Sub Total	**$ 1.67**

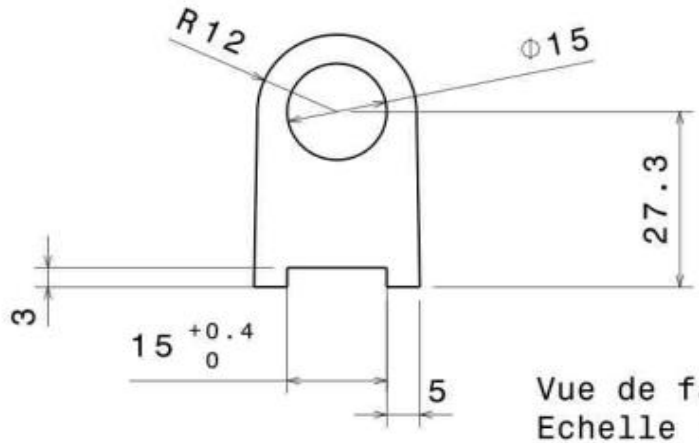

Vue de face
Echelle : 1:1

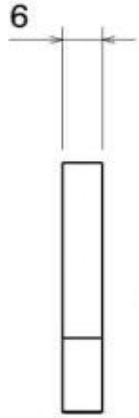

Vue gauche
Echelle : 1:1

Tolérances générales ISO 2768 mK

Taille A4		Ecurie Piston Sport Auto
Dessiné par Jean-Cassien	Date 10/01/2017	Désignation: Insert triangle côté châssis
Coordonnées 06 35 90 81 12 jean.duhil-de-benaze@ecl15.ec-lyon.fr		Quantité 16 / Matériau S500 / Version v0.1
Plan vérifié par PBT		Echelle 1:1 / N° plan 17M_L_078_ICT / Feuille 1/1

University	Ecole Centrale de Lyon		Back to BOM	**Car #**	81	**Part Cost**	$	4.00
System	Suspension System	Drawing :	FileLink1			**Qty**		1
Assembly	Lower Front A-Arm		**FileLink2**	**FileLink1**				
Part	Lower Front Bearing Support		**FileLink3**	**FileLink2**		**Extended Cost**	$	4.00
P/N Base	SU 01002			**FileLink3**				
Suffix	AA							
Details								

ItemOrder	Material	Use	UnitCost	Size1	Unit1	Size2	Unit2	Area Name	Area	Length	Density	Quantity	Sub Total
10	Steel, Mild	Material for Part	$ 2.25	0.137	kg			Rectangular 54 x 54 mm	2.92E-03	0.006	7850	1	$ 0.31
												Sub Total	**$ 0.31**

ItemOrder	Process	Use	UnitCost	Unit	Quantity	Multiplier	Mult. Val.	Sub Total
10	Machining Setup, Install and Remove		$ 1.30		1		1	$ 1.30
20	Laser cut	Main shape contouring	$ 0.01	cm	23.1	Material – Steel	3	$ 0.69
30	Machining Setup, Change		$ 0.65		1		1	$ 0.65
40	Reemed hole	Bearing bore Holing	$ 0.35	hole	1	Material – Steel	3	$ 1.05
							Sub Total	**$ 3.69**

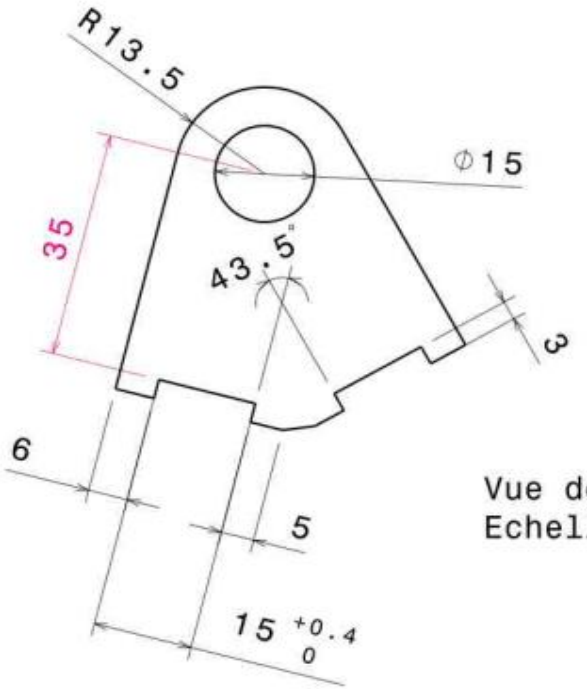

Vue de face
Echelle : 1:1

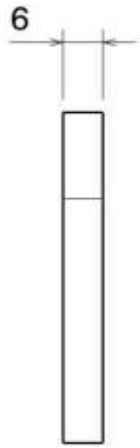

Vue gauche
Echelle : 1:1

Tolérances générales: ISO 2768 mk

Taille A4		Ecurie Piston Sport Auto
Dessiné par Jean-Cassien	Date 10/01/2017	Désignation: Insert triangle avant bas
Coordonnées 06 35 90 81 12 jean.duhil-de-benaze@ecl15.ec-lyon.fr		Quantité 2 / Matériau Acier S500 / Version v1.0
Plan vérifié par PBT		Echelle 1:1 / N° plan 17M_L_075_IFL / Feuille 1/1

University	Ecole Centrale de Lyon		Back to BOM	**Car #**	81	**Part Cost**	$ 2.62
System	Suspension System	Drawing :	FileLink1			**Qty**	1
Assembly	Lower Front A-Arm		**FileLink2**	**FileLink1**			
Part	Fore Lower Front A-Arm Tube		**FileLink3**	**FileLink2**		**Extended Cost**	$ 2.62
P/N Base	SU 01003			**FileLink3**			
Suffix	AA						
Details							

ItemOrder	Material	Use	UnitCost	Size1	Unit1	Size2	Unit2	Area Name	Area	Length	Density	Quantity	Sub Total
10	Steel, Alloy	Material for Part	$ 2.25	0.172	kg			Cylindrical 15x1,5mm	6.36E-05	0.345	7850	1	$ 0.39
												Sub Total	**$ 0.39**

ItemOrder	Process	Use	UnitCost	Unit	Quantity	Multiplier	Mult. Val.	Sub Total
10	Tube cut		$ 0.15	cm	1.5		1	$ 0.23
20	Machining Setup, Install and Remove		$ 1.30		1		1	$ 1.30
30	Machining	Machining of the End notch of the tube	$ 0.04	Cm³	0.24	Material – Steel	3	$ 0.03
40	Machining Setup, Change		$ 0.65		1		1	$ 0.65
50	Machining	Machining of the End notch of the tube	$ 0.04	Cm³	0.24	Material – Steel	3	$ 0.03
							Sub Total	**$ 2.23**

Ne pas diminuer la longueur totale des tubes ! Il ne faut pas toucher aux faces B et C
Les encoches de chaque côté doivent bien être dans le même plan

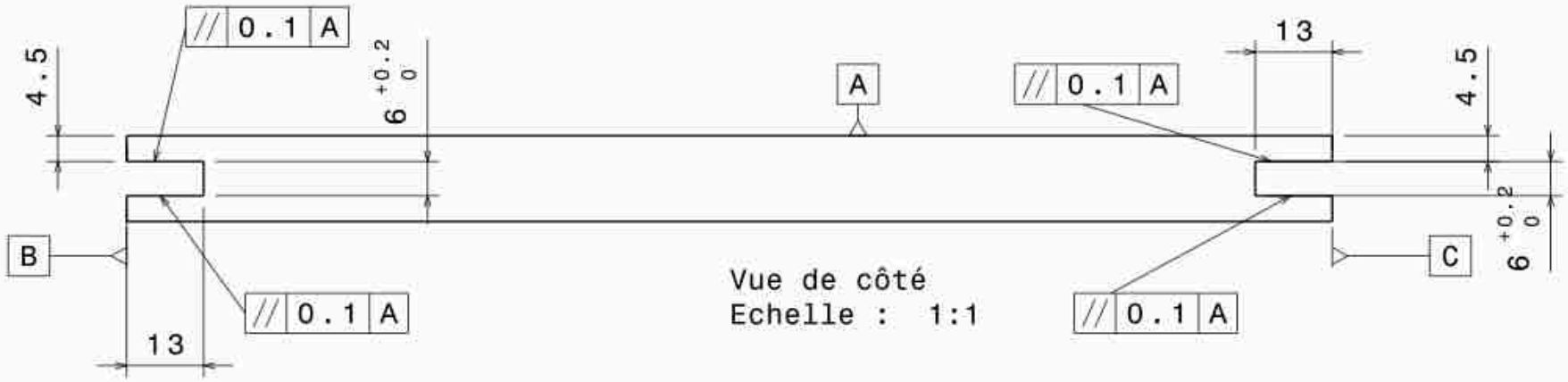

Tolérances générales ISO 2768mk

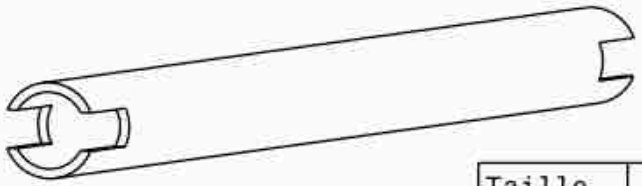

Vue isométrique
Echelle : 1:1

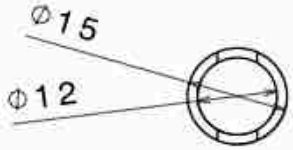

Vue de face
Echelle : 1:1

Taille A4		Ecurie Piston Sport Auto
Dessiné par Jean-Cassien	Date 10/01/2017	Désignation Encoches des tubes de triangles
Coordonnées 06 35 90 81 12 jean.duhil-de-benaze@ecl15.ec-lyon.fr		Quantité 16 / Matériau Acier 25CD4S / Version v1.0
Plan vérifié par CME		Echelle 1:1 / N° plan 17M_L_XXX_XXX / Feuille 1/1

University	Ecole Centrale de Lyon		Back to BOM	**Car #**	81	**Part Cost**	$ 2.67
System	Suspension System	Drawing :	FileLink1			**Qty**	1
Assembly	Lower Front A-Arm		**FileLink2**	**FileLink1**			
Part	Aft Lower Front A-Arm Tube		**FileLink3**	**FileLink2**		**Extended Cost**	$ 2.67
P/N Base	SU 01004			**FileLink3**			
Suffix	AA						
Details							

ItemOrder	Material	Use	UnitCost	Size1	Unit1	Size2	Unit2	Area Name	Area	Length	Density	Quantity	Sub Total
10	Steel, Alloy	Material for Part	$ 2.25	0.192	kg			Cylindrical 15x1,5mm	6.36E-05	0.385	7850	1	$ 0.43
												Sub Total	**$ 0.43**

ItemOrder	Process	Use	UnitCost	Unit	Quantity	Multiplier	Mult. Val.	Sub Total
10	Tube cut		$ 0.15	cm	1.5		1	$ 0.23
20	Machining Setup, Install and Remove		$ 1.30		1		1	$ 1.30
30	Machining	Machining of the End notch of the tube	$ 0.04	Cm^3	0.24	Material – Steel	3	$ 0.03
40	Machining Setup, Change		$ 0.65		1		1	$ 0.65
50	Machining	Machining of the End notch of the tube	$ 0.04	Cm^3	0.24	Material – Steel	3	$ 0.03
							Sub Total	**$ 2.23**

University	Ecole Centrale de Lyon			Back to BOM	**Car #**	81	**Part Cost**	$	0.20
System	Suspension System	Drawing :	FileLink1				**Qty**		4
Assembly	Lower Front A-Arm		**FileLink2**		**FileLink1**				
Part	Spacer on Frame Side		**FileLink3**		**FileLink2**		**Extended Cost**	$	0.81
P/N Base	SU 01005				**FileLink3**				
Suffix	AA								
Details									

ItemOrder	Material	Use	UnitCost	Size1	Unit1	Size2	Unit2	Area Name	Area	Length	Density	Quantity	Sub Total
10	Steel, Mild	Material for Part	$ 2.25	0.004	kg			Cylindrical 13mm diameter	1.33E-04	0.0035	7850	1	$ 0.01
												Sub Total	**$ 0.01**

ItemOrder	Process	Use	UnitCost	Unit	Quantity	Multiplier	Mult. Val.	Sub Total
10	Machining Setup, Install and remove		$ 1.30		1	8 parts made from a single machine setup	0.13	$ 0.16
20	Machining		$ 0.04	cm^3	0.27	Material – Steel	3	$ 0.03
							Sub Total	**$ 0.20**

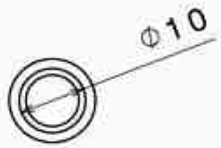

Vue de derrière
Echelle : 1:1

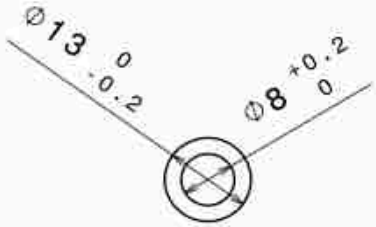

Vue de face
Echelle : 1:1

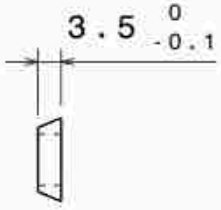

Vue de gauche
Echelle : 1:1

Vue isométrique
Echelle : 1:1

Tolérances générales ISO 2768 mk

Taille A4		Ecurie Piston Sport Auto
Dessiné par Martin Puthod	Date 17/01/2017	Désignation Entretoise 3.5 mm
Coordonnées mputhod@ec-lyon.fr 06 34 31 85 92		
Plan vérifié par RFE		Quantité 42 / Matériau Acier S235 / Version 1.0
		Echelle 1:1 / Plan : 17M_L_059_E4 / Feuille 1/1

University	Ecole Centrale de Lyon			Back to BOM	**Car #**	81	**Part Cost**	$	0.43
System	Suspension System	Drawing :	FileLink1				**Qty**		2
Assembly	Lower Front A-Arm		**FileLink2**		**FileLink1**				
Part	Spacer on Upright Side		**FileLink3**		**FileLink2**		**Extended Cost**	$	0.87
P/N Base	SU 01006				**FileLink3**				
Suffix	AA								
Details									

ItemOrder	Material	Use	UnitCost	Size1	Unit1	Size2	Unit2	Area Name	Area	Length	Density	Quantity	Sub Total
10	Steel, Mild	Material for Part	$ 2.25	0.010	kg			Cylindrical 14mm diameter	1.54E-04	0.008	7850	1	$ 0.02
												Sub Total	**$ 0.02**

ItemOrder	Process	Use	UnitCost	Unit	Quantity	Multiplier	Mult. Val.	Sub Total
10	Machining Setup, Install and remove		$ 1.30		1	4 parts made from a single machine setup	0.25	$ 0.33
20	Machining		$ 0.04	cm^3	0.72	Material – Steel	3	$ 0.09
							Sub Total	**$ 0.41**

Vue de derrière
Echelle : 1:1

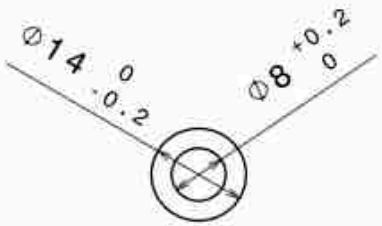

Vue de face
Echelle : 1:1

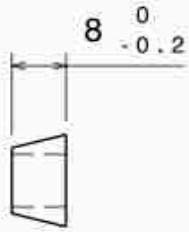

Vue de gauche
Echelle : 1:1

Tolérances générales ISO 2768 mk

Vue isométrique
Echelle : 1:1

Taille A4		Ecurie Piston Sport Auto
Dessiné par Martin Puthod	Date 17/01/2017	Désignation Entretoise 8 mm
Coordonnées mputhod@ec-lyon.fr 06 34 31 85 92		Quantité 12 / Matériau Acier S235 / Version 1.0
Plan vérifié par RFE		Echelle 1:1 / Plan : 17M_L_061_E8 / Feuille 1/1

University	Ecole Centrale de Lyon		Back to BOM	**Car #**	81	**Part Cost**	$ 1.20
System	Suspension System	**FileLink1**				**Qty**	1
Assembly	Lower Front A-Arm	**FileLink2**		**FileLink1**			
Part	Fore A Lower Front A-Arm Mount	**FileLink3**		**FileLink2**		**Extended Cost**	$ 1.20
P/N Base	SU 01007			**FileLink3**			
Suffix	AA						
Details							

ItemOrder	Material	Use	UnitCost	Size1	Unit1	Size2	Unit2	Area Name	Area	Length	Density	Quantity	Sub Total
10	Steel, Mild	Material for Part	$ 2.25	0.059	kg			Rectangular 52 x 24 mm	1.25E-03	0.006	7850	1	$ 0.13
												Sub Total	**$ 0.13**

ItemOrder	Process	Use	UnitCost	Unit	Quantity	Multiplier	Mult. Val.	Sub Total
10	Machining Setup, Install and Remove		$ 1.30		1	2 parts made from a single machine setup	0.5	$ 0.65
20	Laser cut	Main shape contouring	$ 0.01	cm	13.95	Material – Steel	3	$ 0.42
							Sub Total	**$ 1.07**

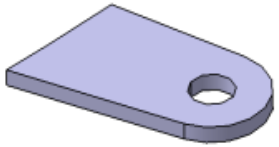

University	Ecole Centrale de Lyon		Back to BOM	**Car #**	81	**Part Cost**	$ 1.16
System	Suspension System	**FileLink1**				**Qty**	1
Assembly	Lower Front A-Arm	**FileLink2**		**FileLink1**			
Part	Fore B Lower Front A-Arm Mount	**FileLink3**		**FileLink2**		**Extended Cost**	$ 1.16
P/N Base	SU 01008			**FileLink3**			
Suffix	AA						
Details							

ItemOrder	Material	Use	UnitCost	Size1	Unit1	Size2	Unit2	Area Name	Area	Length	Density	Quantity	Sub Total
10	Steel, Mild	Material for Part	$ 2.25	0.043	kg			Rectangular 40 x 23 mm	9.20E-04	0.006	7850	1	$ 0.10
												Sub Total	**$ 0.10**

ItemOrder	Process	Use	UnitCost	Unit	Quantity	Multiplier	Mult. Val.	Sub Total
10	Machining Setup, Install and Remove		$ 1.30		1	2 parts made from a single machine setup	0.5	$ 0.65
20	Laser cut	Main shape contouring	$ 0.01	cm	13.65	Material – Steel	3	$ 0.41
							Sub Total	**$ 1.06**

University	Ecole Centrale de Lyon		Back to BOM	**Car #**	81	**Part Cost**	$ 1.08
System	Suspension System	**FileLink1**				**Qty**	1
Assembly	Lower Front A-Arm	**FileLink2**		**FileLink1**			
Part	Aft A Lower Front A-Arm Mount	**FileLink3**		**FileLink2**		**Extended Cost**	$ 1.08
P/N Base	SU 01009			**FileLink3**			
Suffix	AA						
Details							

ItemOrder	Material	Use	UnitCost	Size1	Unit1	Size2	Unit2	Area Name	Area	Length	Density	Quantity	Sub Total
10	Steel, Mild	Material for Part	$ 2.25	0.029	kg			Rectangular 31 x 20 mm	6.20E-04	0.006	7850	1	$ 0.07
												Sub Total	**$ 0.07**

ItemOrder	Process	Use	UnitCost	Unit	Quantity	Multiplier	Mult. Val.	Sub Total
10	Machining Setup, Install and Remove		$ 1.30		1	2 parts made from a single machine setup	0.5	$ 0.65
20	Laser cut	Main shape contouring	$ 0.01	cm	12.05	Material – Steel	3	$ 0.36
							Sub Total	**$ 1.01**

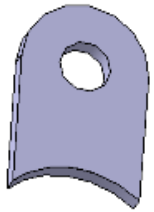

University	Ecole Centrale de Lyon		Back to BOM	**Car #**	81	**Part Cost**	$ 1.14
System	Suspension System	**FileLink1**				**Qty**	1
Assembly	Lower Front A-Arm	**FileLink2**		**FileLink1**			
Part	Aft B Lower Front A-Arm Mount	**FileLink3**		**FileLink2**		**Extended Cost**	$ 1.14
P/N Base	SU 01010			**FileLink3**			
Suffix	AA						
Details							

ItemOrder	Material	Use	UnitCost	Size1	Unit1	Size2	Unit2	Area Name	Area	Length	Density	Quantity	Sub Total
10	Steel, Mild	Material for Part	$ 2.25	0.039	kg			Rectangular 38 x 22 mm	8.36E-04	0.006	7850	1	$ 0.09
												Sub Total	**$ 0.09**

ItemOrder	Process	Use	UnitCost	Unit	Quantity	Multiplier	Mult. Val.	Sub Total
10	Machining Setup, Install and Remove		$ 1.30		1	2 parts made from a single machine setup	0.5	$ 0.65
20	Laser cut	Main shape contouring	$ 0.01	cm	13.25	Material – Steel	3	$ 0.40
							Sub Total	**$ 1.05**

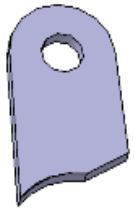

University	Ecole Centrale de Lyon	Back to BOM	**Car #**	81	**Asm Cost** $ 62.16
System	Suspension System				**Qty** 2
Assembly	Upper Front A-Arm		**FileLink1**		
P/N Base	SU A0002		**FileLink2**		**Extended Cost** $ 124.32
Suffix	AA		**FileLink3**		
Details	Steel A-Arm				

ItemOrder	Part	Part Cost	Quantity	Sub Total
10	Simple Bearing Support	$ 1.75	2	$ 3.51
20	Upper Front Bearing Support	$ 4.18	1	$ 4.18
30	Fore Upper Front A-Arm Tube	$ 2.47	1	$ 2.47
40	Aft Upper Front A-Arm Tube	$ 2.51	1	$ 2.51
50	Front Pull-Rod Mount	$ 0.83	2	$ 1.65
60	Spacer on Frame Side	$ 0.26	4	$ 1.03
70	Spacer on Upright Side	$ 0.50	2	$ 1.00
80	Fore A Upper Front A-Arm Mount	$ 1.10	1	$ 1.10
90	Fore B Upper Front A-Arm Mount	$ 1.12	1	$ 1.12
100	Aft A Upper Front A-Arm Mount	$ 1.03	1	$ 1.03
110	Aft B Upper Front A-Arm Mount	$ 1.08	1	$ 1.08
			Sub Total	**$ 20.67**

ItemOrder	Material	Use	UnitCost	Size1	Unit1	Size2	Unit2	Area Name	Area	Length	Density	Quantity	Sub Total
10	Bearing, Spherical	Link to Upright and Frame	$ 6.92	8	mm							3	$ 20.76
20	Paint	Mounts and A-Arm Painting	$ 10.00	0.045	m^2							0.045	$ 0.45
30	Adhesive	Glue for Ball Joints – Cost Included in Processes											$ -
												Sub Total	**$ 21.21**

ItemOrder	Process	Use	UnitCost	Unit	Quantity	Multiplier	Mult. Val.	Sub Total
10	Weld	Steel Mounts Welding	$ 0.15	cm	29			$ 4.35
20	Aerosol Apply	Steel Mounts Painting	$ 5.25	m²	6.23E-03			$ 0.03
30	Weld	Steel Tubes Welding on Ball Joint Supports	$ 0.15	cm	25.6			$ 3.84
40	Weld	Pull-Rod Mount Welding on Ball Joint Support	$ 0.15	cm	16.8			$ 2.52
50	Brush Apply	Glue Applying on Ball Joint Bores	$ 0.02	cm²	7.5			$ 0.15
60	Assemble, 1kg, Line on Line	Ball Joints in Bores Installation	$ 0.13	Unit	3			$ 0.39
70	Aerosol Apply	A-Arm Painting	$ 5.25	m²	3.85E-02			$ 0.20
80	Assemble,1kg, Loose	A-Arm Positioning on Mounts	$ 0.06	Unit	1			$ 0.06
90	Assemble, 1kg, Line on Line	Spacers Installation on Mounts	$ 0.13	Unit	4			$ 0.52
100	Assemble, 1kg, Line on Line	Washers Installation on Mounts	$ 0.13	Unit	4			$ 0.52
110	Assemble,1kg, Loose	A-Arm Positioning on Upside	$ 0.06	Unit	1			$ 0.06
120	Assemble, 1kg, Line on Line	Spacers Installation on Upside	$ 0.13	Unit	2			$ 0.26
130	Assemble, 1kg, Line on Line	Washers Installation on Upside	$ 0.13	Unit	2			$ 0.26
140	Ratchet <= 25,4mm	M8 Bolts Installation	$ 0.75	Unit	3			$ 2.25
150	Reaction tool <=25,4mm	M8 Nuts Blocking	$ 0.25	Unit	3			$ 0.75
							Sub Total	**$ 16.17**

ItemOrder	Fastener	Use	UnitCost	Size1	Unit1	Size2	Unit2	Quantity	Sub Total
10	Bolt, Grade 8,8 (SAE 5)	A-Arm Fixing Bolts on Frame Side	0.16	8	mm	40	mm	2	$ 0.32
20	Bolt, Grade 8,8 (SAE 5)	A-Arm Fixing Bolts on Upright Side	0.26	8	mm	60	mm	1	$ 0.26
30	Nut, Grade 8,8 (SAE 5)	A-Arm Fixing Nuts	0.04	8	mm			3	$ 0.13
40	Washer, Grade 8,8 (SAE 5)	A-Arm Fixing Washers	0.01	8	mm			6	$ 0.06
								Sub Total	**$ 0.78**

ItemOrder	Tooling	Use	UnitCost	Unit	Quantity	PVF	FractionIncluded	Sub Total
10	Welds - Welding Fixture	Welding Processes	$ 500.00	point	20	3000	1	$ 3.33
							Sub Total	**$ 3.33**

University	Ecole Centrale de Lyon		Back to BOM	**Car #**	81	**Part Cost**	$	1.75
System	Suspension System	Drawing :	FileLink1			**Qty**		2
Assembly	Upper Front A-Arm		**FileLink2**	**FileLink1**				
Part	Simple Bearing Support		**FileLink3**	**FileLink2**		**Extended Cost**	$	3.51
P/N Base	SU 02001			**FileLink3**				
Suffix	AA							
Details								

ItemOrder	Material	Use	UnitCost	Size1	Unit1	Size2	Unit2	Area Name	Area	Length	Density	Quantity	Sub Total
10	Steel, Mild	Material for Part	$ 2.25	0.035	kg			Rectangular 30 x 25 mm	7.50E-04	0.006	7850	1	$ 0.08
												Sub Total	**$ 0.08**

ItemOrder	Process	Use	UnitCost	Unit	Quantity	Multiplier	Mult. Val.	Sub Total
10	Machining Setup, Install and Remove		$ 1.30		1	16 parts made from a single machine setup	0.06	$ 0.08
20	Laser cut	Main shape contouring	$ 0.01	cm	16.7	Material – Steel	3	$ 0.50
30	Machining Setup, Change		$ 0.65		1	16 parts made from a single machine setup	0.06	$ 0.04
40	Reemed hole	Bearing bore Holing	$ 0.35	hole	1	Material – Steel	3	$ 1.05
							Sub Total	**$ 1.67**

University	Ecole Centrale de Lyon		Back to BOM	**Car #**	81	**Part Cost**	$ 4.18
System	Suspension System	Drawing :	FileLink1			**Qty**	1
Assembly	Upper Front A-Arm	**FileLink2**		**FileLink1**			
Part	Upper Front Bearing Support	**FileLink3**		**FileLink2**		**Extended Cost**	$ 4.18
P/N Base	SU 02002			**FileLink3**			
Suffix	AA						
Details							

ItemOrder	Material	Use	UnitCost	Size1	Unit1	Size2	Unit2	Area Name	Area	Length	Density	Quantity	Sub Total
10	Steel, Mild	Material for Part	$ 2.25	0.079	kg			Rectangular 79 x 91 mm	7.19E-03	0.006	7850	1	$ 0.76
												Sub Total	**$ 0.76**

ItemOrder	Process	Use	UnitCost	Unit	Quantity	Multiplier	Mult. Val.	Sub Total
10	Machining Setup, Install and Remove		$ 1.30		1	2 parts made from a single machine setup	0.5	$ 0.65
20	Laser cut	Main shape contouring	$ 0.01	cm	46.5	Material – Steel	3	$ 1.39
30	Machining Setup, Change		$ 0.65		1	2 parts made from a single machine setup	0.5	$ 0.33
40	Reemed hole	Bearing bore Holing	$ 0.35	hole	1	Material – Steel	3	$ 1.05
							Sub Total	**$ 3.42**

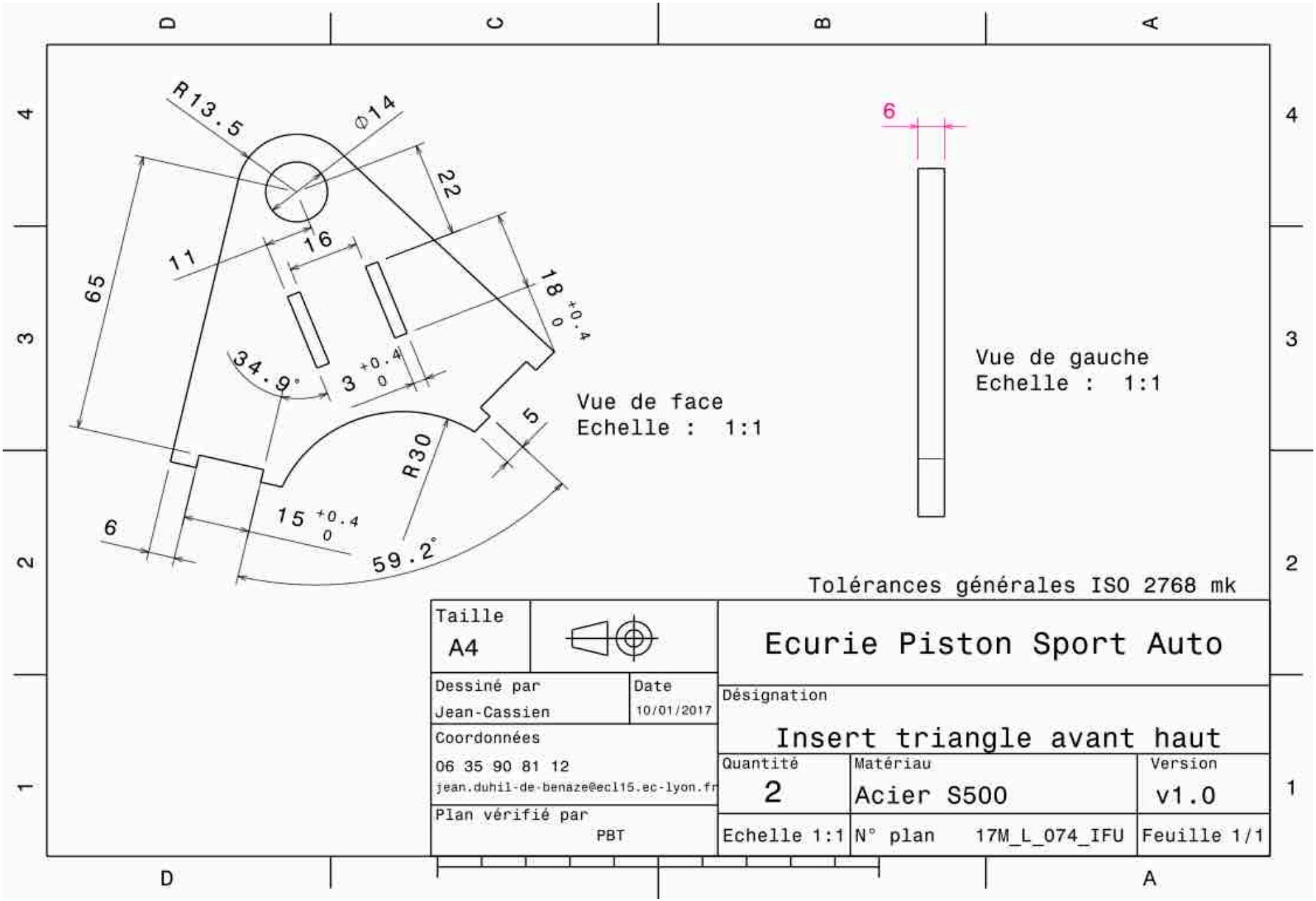
R13.5
Ø14
22
65
11
16
18 +0.4 0
34.9°
3 +0.4 0
5
R30
6
15 +0.4 0
59.2°
Vue de face
Echelle : 1:1
6
Vue de gauche
Echelle : 1:1
Tolérances générales ISO 2768 mk
Taille
A4
Ecurie Piston Sport Auto
Dessiné par
Jean-Cassien
Date
10/01/2017
Désignation
Insert triangle avant haut
Coordonnées
06 35 90 81 12
jean.duhil-de-benaze@ecl15.ec-lyon.fr
Quantité
2
Matériau
Acier S500
Version
v1.0
Plan vérifié par
PBT
Echelle 1:1
N° plan 17M_L_074_IFU
Feuille 1/1

University	Ecole Centrale de Lyon		Back to BOM	**Car #**	81	**Part Cost**	$ 2.47
System	Suspension System	Drawing :	FileLink1			**Qty**	1
Assembly	Upper Front A-Arm		**FileLink2**	**FileLink1**			
Part	Fore Upper Front A-Arm Tube		**FileLink3**	**FileLink2**		**Extended Cost**	$ 2.47
P/N Base	SU 02003			**FileLink3**			
Suffix	AA						
Details							

ItemOrder	Material	Use	UnitCost	Size1	Unit1	Size2	Unit2	Area Name	Area	Length	Density	Quantity	Sub Total
10	Steel, Alloy	Material for Part	$ 2.25	0.104	kg	0.012	m	Cylindrical 15x1,5mm	6.36E-05	0.209	7850	1	$ 0.23
												Sub Total	**$ 0.23**

ItemOrder	Process	Use	UnitCost	Unit	Quantity	Multiplier	Mult. Val.	Sub Total
10	Tube cut		$ 0.15	cm	1.5		1	$ 0.23
20	Machining Setup, Install and Remove		$ 1.30		1		1	$ 1.30
30	Machining	Machining of the End notch of the tube	$ 0.04	Cm³	0.24	Material – Steel	3	$ 0.03
40	Machining Setup, Change		$ 0.65		1		1	$ 0.65
50	Machining	Machining of the End notch of the tube	$ 0.04	Cm³	0.24	Material – Steel	3	$ 0.03
							Sub Total	**$ 2.23**

University	Ecole Centrale de Lyon		Back to BOM	**Car #**	81	**Part Cost**	$	2.51
System	Suspension System	Drawing :	FileLink1			**Qty**		1
Assembly	Upper Front A-Arm		**FileLink2**	**FileLink1**				
Part	Aft Upper Front A-Arm Tube		**FileLink3**	**FileLink2**		**Extended Cost**	$	2.51
P/N Base	SU 02004			**FileLink3**				
Suffix	AA							
Details								

ItemOrder	Material	Use	UnitCost	Size1	Unit1	Size2	Unit2	Area Name	Area	Length	Density	Quantity	Sub Total
10	Steel, Alloy	Material for Part	$ 2.25	0.121	kg			Cylindrical 15x1,5mm	6.36E-05	0.243	7850	1	$ 0.27
												Sub Total	**$ 0.27**

ItemOrder	Process	Use	UnitCost	Unit	Quantity	Multiplier	Mult. Val.	Sub Total
10	Tube cut		$ 0.15	cm	1.5		1	$ 0.23
20	Machining Setup, Install and Remove		$ 1.30		1		1	$ 1.30
30	Machining	Machining of the End notch of the tube	$ 0.04	Cm^3	0.24	Material – Steel	3	$ 0.03
40	Machining Setup, Change		$ 0.65		1		1	$ 0.65
50	Machining	Machining of the End notch of the tube	$ 0.04	Cm^3	0.24	Material – Steel	3	$ 0.03
							Sub Total	**$ 2.23**

University	Ecole Centrale de Lyon		Back to BOM	**Car #**	81	**Part Cost**	$	0.83
System	Suspension System	Drawing :	FileLink1			**Qty**		2
Assembly	Upper Front A-Arm		**FileLink2**	**FileLink1**				
Part	Front Pull-Rod Mount		**FileLink3**	**FileLink2**		**Extended Cost**	$	1.65
P/N Base	SU 02005			**FileLink3**				
Suffix	AA							
Details								

ItemOrder	Material	Use	UnitCost	Size1	Unit1	Size2	Unit2	Area Name	Area	Length	Density	Quantity	Sub Total
10	Steel, Mild	Material for Part	$ 2.25	0.024	kg			Rectangular 21 x 48 mm	1.01E-03	0.003	7850	1	$ 0.05
												Sub Total	**$ 0.05**

ItemOrder	Process	Use	UnitCost	Unit	Quantity	Multiplier	Mult. Val.	Sub Total
10	Machining Setup, Install and Remove		$ 1.30		1	4 parts made from a single machine setup	0.25	$ 0.33
20	Laser cut	Main shape contouring	$ 0.01	cm	14.93	Material – Steel	3	$ 0.45
							Sub Total	**$ 0.77**

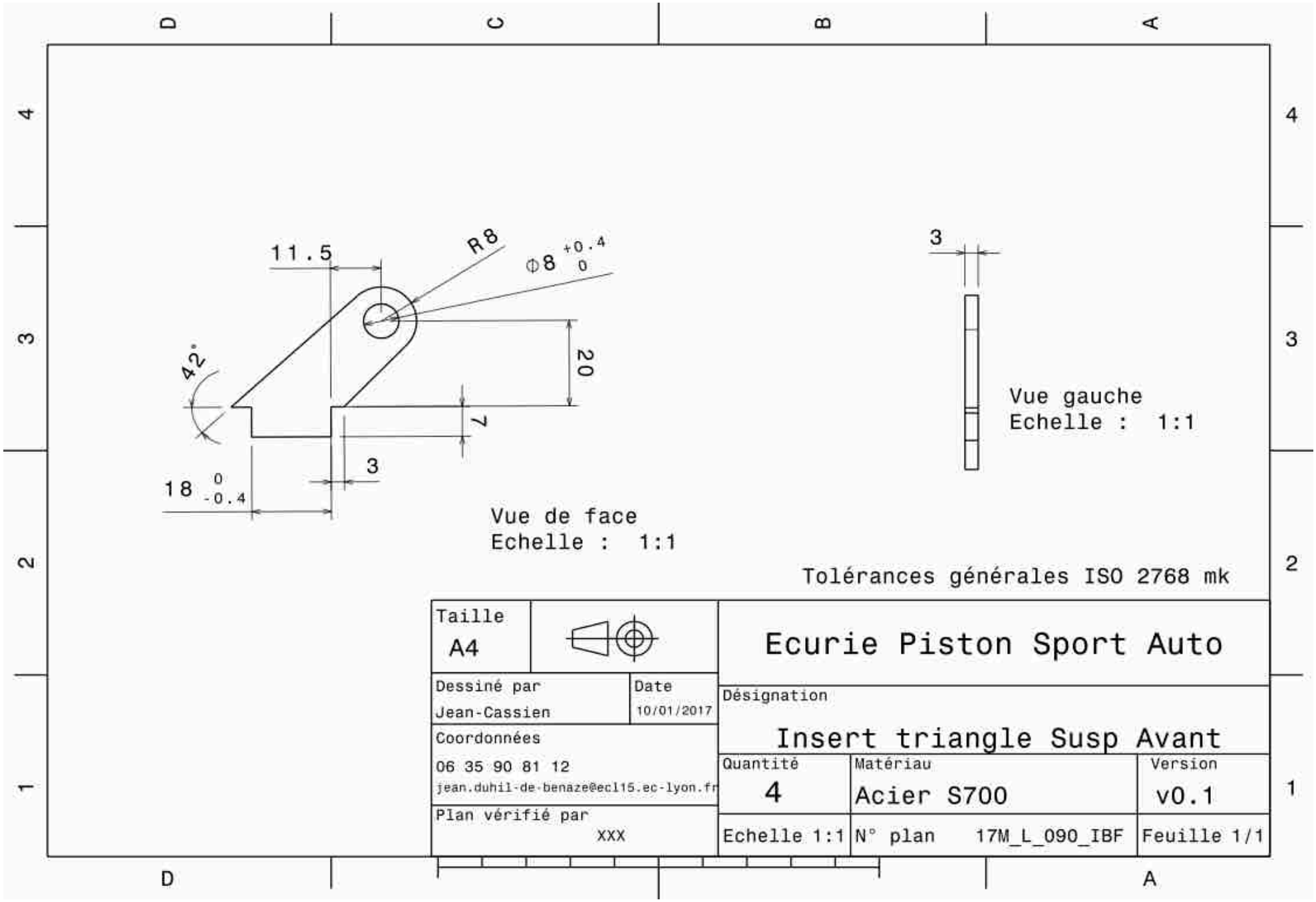
11.5
R8
Φ8 +0.4 0
42°
20
7
3
18 0 -0.4
Vue de face
Echelle : 1:1
3
Vue gauche
Echelle : 1:1
Tolérances générales ISO 2768 mk
Taille
A4
Ecurie Piston Sport Auto
Dessiné par
Jean-Cassien
Date
10/01/2017
Désignation
Insert triangle Susp Avant
Coordonnées
06 35 90 81 12
jean.duhil-de-benaze@ecl15.ec-lyon.fr
Quantité
4
Matériau
Acier S700
Version
v0.1
Plan vérifié par
XXX
Echelle 1:1
N° plan 17M_L_090_IBF
Feuille 1/1

University	Ecole Centrale de Lyon		Back to BOM	**Car #**	81	**Part Cost**	$	0.26
System	Suspension System	Drawing :	FileLink1			**Qty**		4
Assembly	Upper Front A-Arm		**FileLink2**	**FileLink1**				
Part	Spacer on Frame Side		**FileLink3**	**FileLink2**		**Extended Cost**	$	1.03
P/N Base	SU 02006			**FileLink3**				
Suffix	AA							
Details								

ItemOrder	Material	Use	UnitCost	Size1	Unit1	Size2	Unit2	Area Name	Area	Length	Density	Quantity	Sub Total
10	Steel, Mild	Material for Part	$ 2.25	0.004	kg			Cylindrical 13mm diameter	1.33E-04	0.0035	7850	1	$ 0.01
												Sub Total	**$ 0.01**

ItemOrder	Process	Use	UnitCost	Unit	Quantity	Multiplier	Mult. Val.	Sub Total
10	Machining Setup, Install and remove		$ 1.30		1	6 parts made from a single machine setup	0.17	$ 0.22
20	Machining		$ 0.04	cm^3	0.27	Material – Steel	3	$ 0.03
							Sub Total	**$ 0.25**

University	Ecole Centrale de Lyon			Back to BOM	**Car #**	81	**Part Cost**	$	0.50
System	Suspension System	Drawing :	FileLink1				**Qty**		2
Assembly	Upper Front A-Arm		**FileLink2**		**FileLink1**				
Part	Spacer on Upright Side		**FileLink3**		**FileLink2**		**Extended Cost**	$	1.00
P/N Base	SU 02007				**FileLink3**				
Suffix	AA								
Details									

ItemOrder	Material	Use	UnitCost	Size1	Unit1	Size2	Unit2	Area Name	Area	Length	Density	Quantity	Sub Total
10	Steel, Mild	Material for Part	$ 2.25	0.016	kg			Cylindrical 16mm diameter	2.01E-04	0.010	7850	1	$ 0.04
												Sub Total	**$ 0.04**

ItemOrder	Process	Use	UnitCost	Unit	Quantity	Multiplier	Mult. Val.	Sub Total
10	Machining Setup, Install and remove		$ 1.30		1	4 parts made from a single machine setup	0.25	$ 0.33
20	Machining		$ 0.04	cm^3	1.16	Material – Steel	3	$ 0.14
							Sub Total	**$ 0.46**

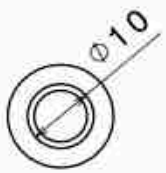

Vue de derrière
Echelle : 1:1

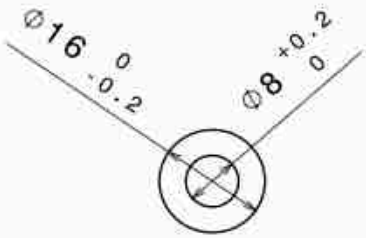

Vue de face
Echelle : 1:1

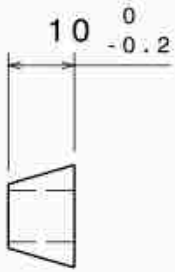

Vue de gauche
Echelle : 1:1

Vue isométrique
Echelle : 1:1

Tolérances générales ISO 2768 mk

Taille A4		Ecurie Piston Sport Auto
Dessiné par Martin Puthod	Date 17/01/2017	Désignation Entretoise 10 mm
Coordonnées mputhod@ec-lyon.fr 06 34 31 85 92		
Plan vérifié par RFE		Quantité 8 / Matériau Acier S235 / Version 1.0
		Echelle 1:1 / Plan : 17M_L_088_E10 / Feuille 1/1

University	Ecole Centrale de Lyon		Back to BOM	**Car #**	81	**Part Cost**	$	1.10
System	Suspension System	Drawing :	FileLink1			**Qty**		1
Assembly	Upper Front A-Arm		**FileLink2**	**FileLink1**				
Part	Fore A Upper Front A-Arm Mount		**FileLink3**	**FileLink2**		**Extended Cost**	$	1.10
P/N Base	SU 02008			**FileLink3**				
Suffix	AA							
Details								

ItemOrder	Material	Use	UnitCost	Size1	Unit1	Size2	Unit2	Area Name	Area	Length	Density	Quantity	Sub Total
10	Steel, Mild	Material for Part	$ 2.25	0.021	kg			Rectangular 20 x 45 mm	9.00E-04	0.003	7850	1	$ 0.05
												Sub Total	**$ 0.05**

ItemOrder	Process	Use	UnitCost	Unit	Quantity	Multiplier	Mult. Val.	Sub Total
10	Machining Setup, Install and Remove		$ 1.30		1	2 parts made from a single machine setup	0.5	$ 0.65
20	Laser cut	Main shape contouring	$ 0.01	cm	13.4	Material – Steel	3	$ 0.40
							Sub Total	**$ 1.05**

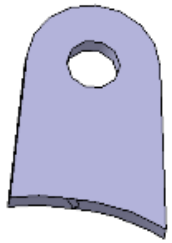

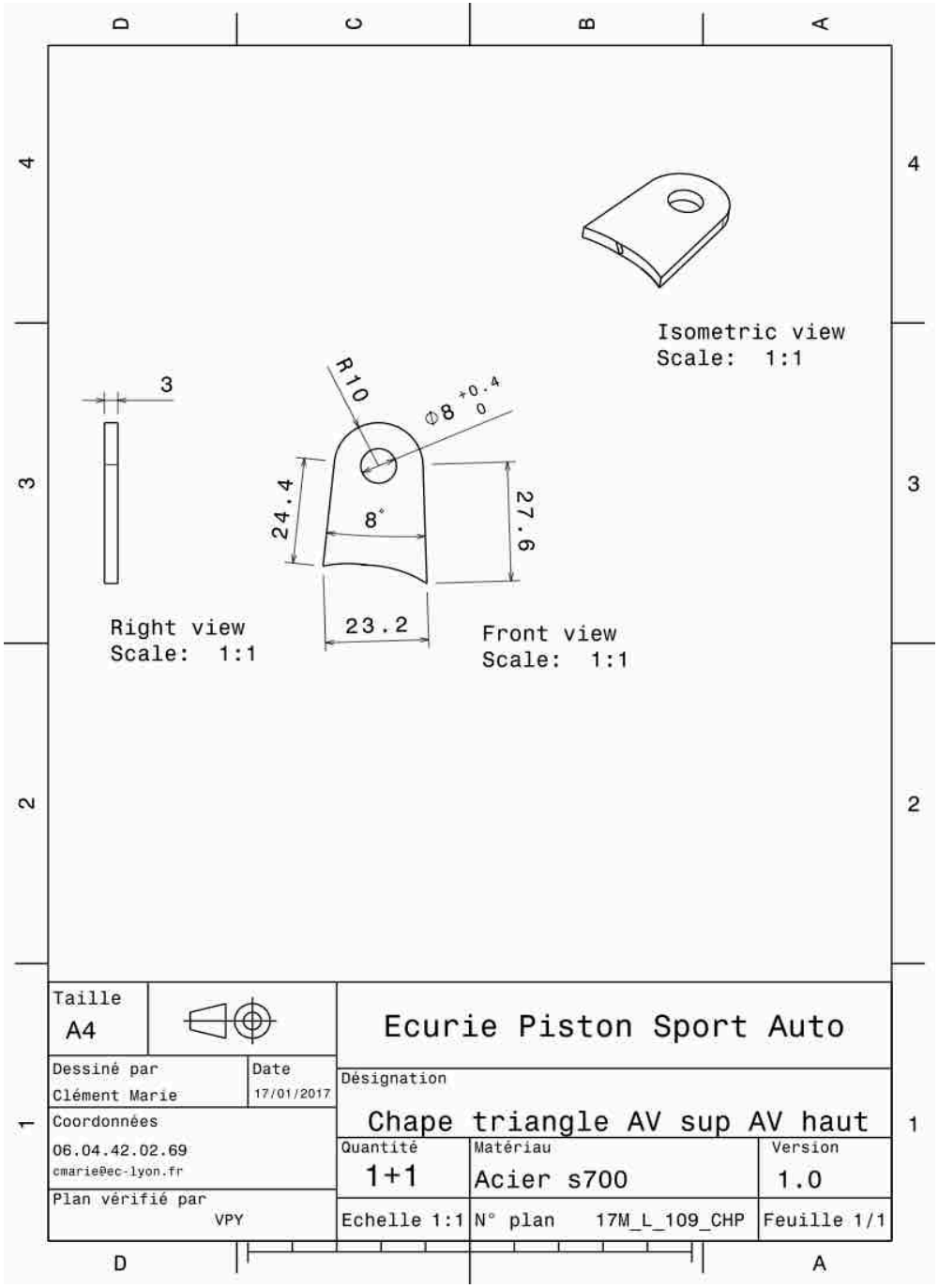
Isometric view
Scale: 1:1
3
Right view
Scale: 1:1
R10
Φ8 +0.4 0
24.4
8°
27.6
23.2
Front view
Scale: 1:1
Taille
A4
Ecurie Piston Sport Auto
Dessiné par
Clément Marie
Date
17/01/2017
Désignation
Chape triangle AV sup AV haut
Coordonnées
06.04.42.02.69
cmarie@ec-lyon.fr
Quantité
1+1
Matériau
Acier s700
Version
1.0
Plan vérifié par
VPY
Echelle 1:1
N° plan 17M_L_109_CHP
Feuille 1/1

University	Ecole Centrale de Lyon		Back to BOM	**Car #**	81	**Part Cost**	$	1.12
System	Suspension System	Drawing :	FileLink1			**Qty**		1
Assembly	Upper Front A-Arm		**FileLink2**	**FileLink1**				
Part	Fore B Upper Front A-Arm Mount		**FileLink3**	**FileLink2**		**Extended Cost**	$	1.12
P/N Base	SU 02009			**FileLink3**				
Suffix	AA							
Details								

ItemOrder	Material	Use	UnitCost	Size1	Unit1	Size2	Unit2	Area Name	Area	Length	Density	Quantity	Sub Total
10	Steel, Mild	Material for Part	$ 2.25	0.025	kg			Rectangular 39 x 27 mm	1.05E-03	0.003	7850	1	$ 0.06
												Sub Total	**$ 0.06**

ItemOrder	Process	Use	UnitCost	Unit	Quantity	Multiplier	Mult. Val.	Sub Total
10	Machining Setup, Install and Remove		$ 1.30		1	2 parts made from a single machine setup	0.5	$ 0.65
20	Laser cut	Main shape contouring	$ 0.01	cm	13.7	Material – Steel	3	$ 0.41
							Sub Total	**$ 1.06**

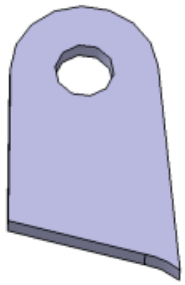

SU 02009

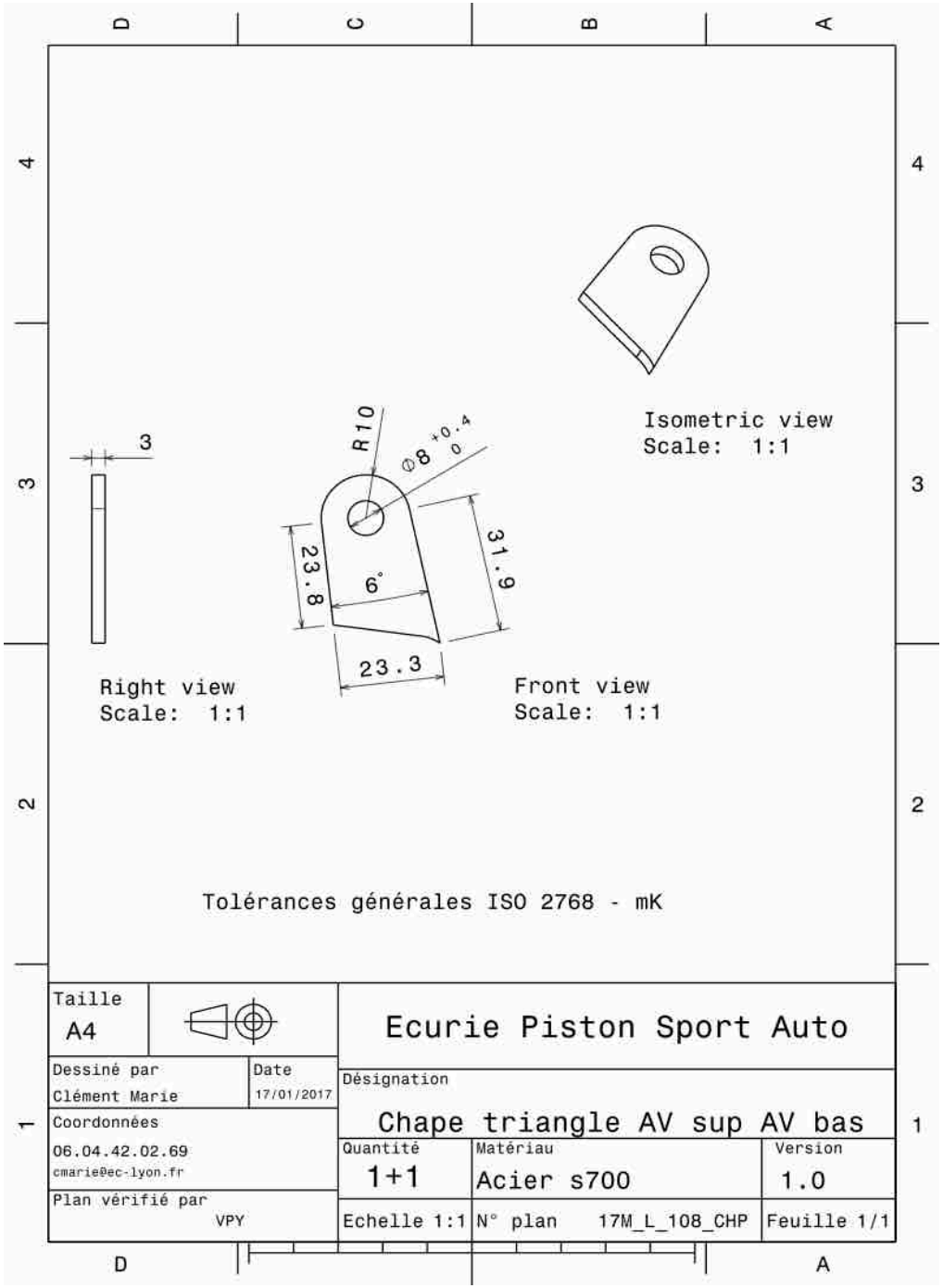
Isometric view
Scale: 1:1
3
R10
Ø8 +0.4 0
23.8
6°
31.9
23.3
Right view
Scale: 1:1
Front view
Scale: 1:1
Tolérances générales ISO 2768 - mK
Taille
A4
Ecurie Piston Sport Auto
Dessiné par
Clément Marie
Date
17/01/2017
Désignation
Chape triangle AV sup AV bas
Coordonnées
06.04.42.02.69
cmarie@ec-lyon.fr
Quantité
1+1
Matériau
Acier s700
Version
1.0
Plan vérifié par
VPY
Echelle 1:1
N° plan 17M_L_108_CHP
Feuille 1/1

University	Ecole Centrale de Lyon		Back to BOM	**Car #**	81	**Part Cost**	$	1.03
System	Suspension System	Drawing :	FileLink1			**Qty**		1
Assembly	Upper Front A-Arm		**FileLink2**	**FileLink1**				
Part	Aft A Upper Front A-Arm Mount		**FileLink3**	**FileLink2**		**Extended Cost**	$	1.03
P/N Base	SU 02010			**FileLink3**				
Suffix	AA							
Details								

ItemOrder	Material	Use	UnitCost	Size1	Unit1	Size2	Unit2	Area Name	Area	Length	Density	Quantity	Sub Total
10	Steel, Mild	Material for Part	$ 2.25	0.016	kg			Rectangular 20 x 33 mm	6.60E-04	0.003	7850	1	$ 0.03
												Sub Total	**$ 0.03**

ItemOrder	Process	Use	UnitCost	Unit	Quantity	Multiplier	Mult. Val.	Sub Total
10	Machining Setup, Install and Remove		$ 1.30		1	2 parts made from a single machine setup	0.5	$ 0.65
20	Laser cut	Main shape contouring	$ 0.01	cm	11.7	Material – Steel	3	$ 0.35
							Sub Total	**$ 1.00**

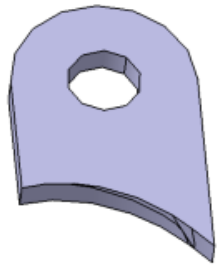

SU 02010

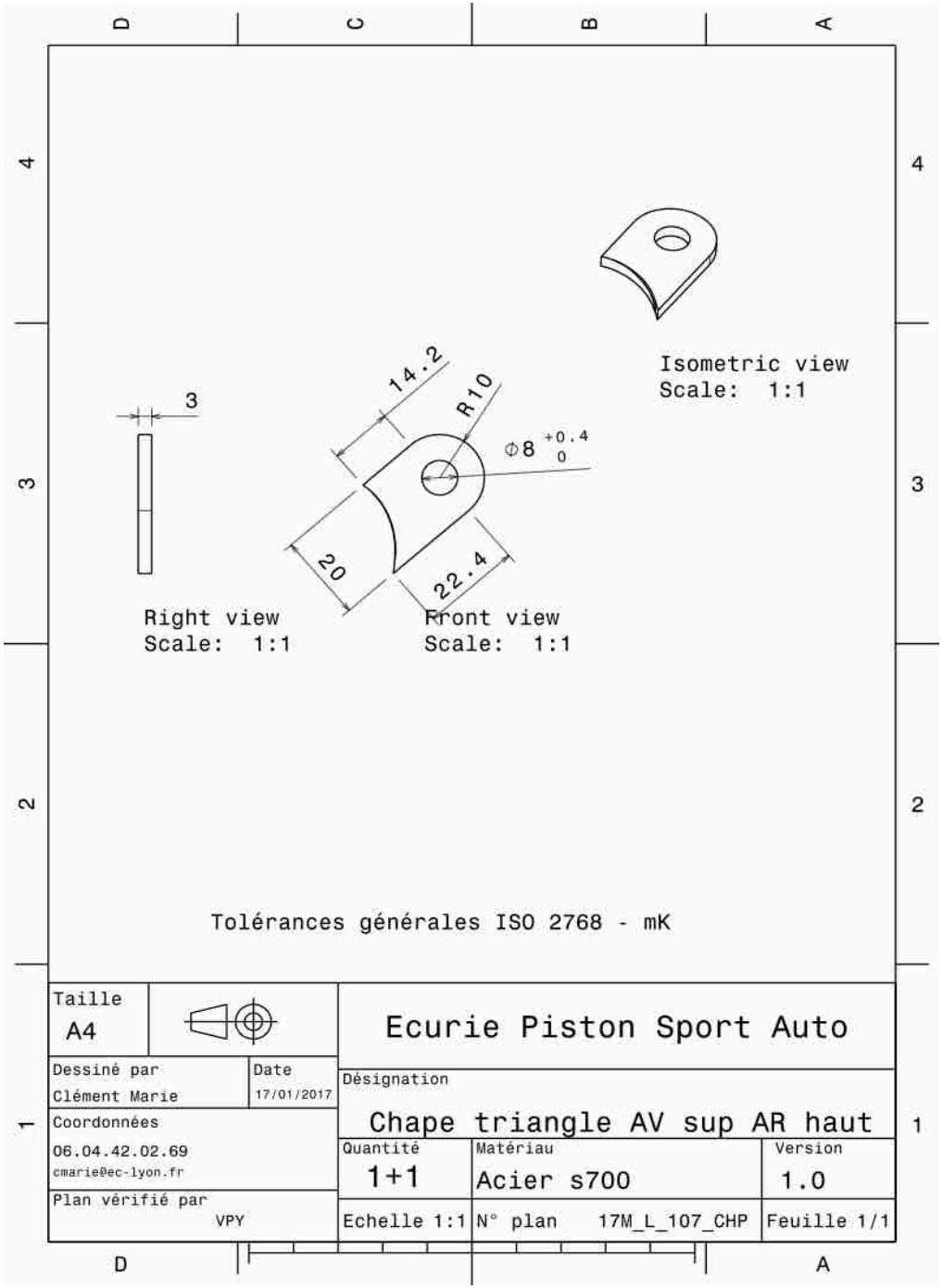
Isometric view
Scale: 1:1
3
14.2
R10
Φ8 +0.4 0
20
22.4
Right view
Scale: 1:1
Front view
Scale: 1:1
Tolérances générales ISO 2768 - mK
Taille
A4
Ecurie Piston Sport Auto
Dessiné par
Clément Marie
Date
17/01/2017
Désignation
Chape triangle AV sup AR haut
Coordonnées
06.04.42.02.69
cmarie@ec-lyon.fr
Quantité
1+1
Matériau
Acier s700
Version
1.0
Plan vérifié par
VPY
Echelle 1:1
N° plan 17M_L_107_CHP
Feuille 1/1

University	Ecole Centrale de Lyon			Back to BOM	**Car #**	81	**Part Cost**	$	1.08
System	Suspension System	Drawing :	FileLink1				**Qty**		1
Assembly	Upper Front A-Arm		**FileLink2**		**FileLink1**				
Part	Aft B Upper Front A-Arm Mount		**FileLink3**		**FileLink2**		**Extended Cost**	$	1.08
P/N Base	SU 02011				**FileLink3**				
Suffix	AA								
Details									

ItemOrder	Material	Use	UnitCost	Size1	Unit1	Size2	Unit2	Area Name	Area	Length	Density	Quantity	Sub Total
10	Steel, Mild	Material for Part	$ 2.25	0.020	kg			Rectangular 40 x 21 mm	8.40E-04	0.003	7850	1	$ 0.04
												Sub Total	**$ 0.04**

ItemOrder	Process	Use	UnitCost	Unit	Quantity	Multiplier	Mult. Val.	Sub Total
10	Machining Setup, Install and Remove		$ 1.30		1	2 parts made from a single machine setup	0.5	$ 0.65
20	Laser cut	Main shape contouring	$ 0.01	cm	12.9	Material – Steel	3	$ 0.39
							Sub Total	**$ 1.04**

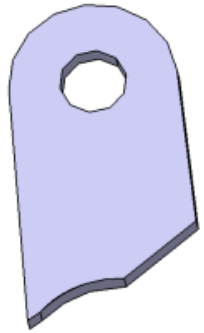

SU 02011

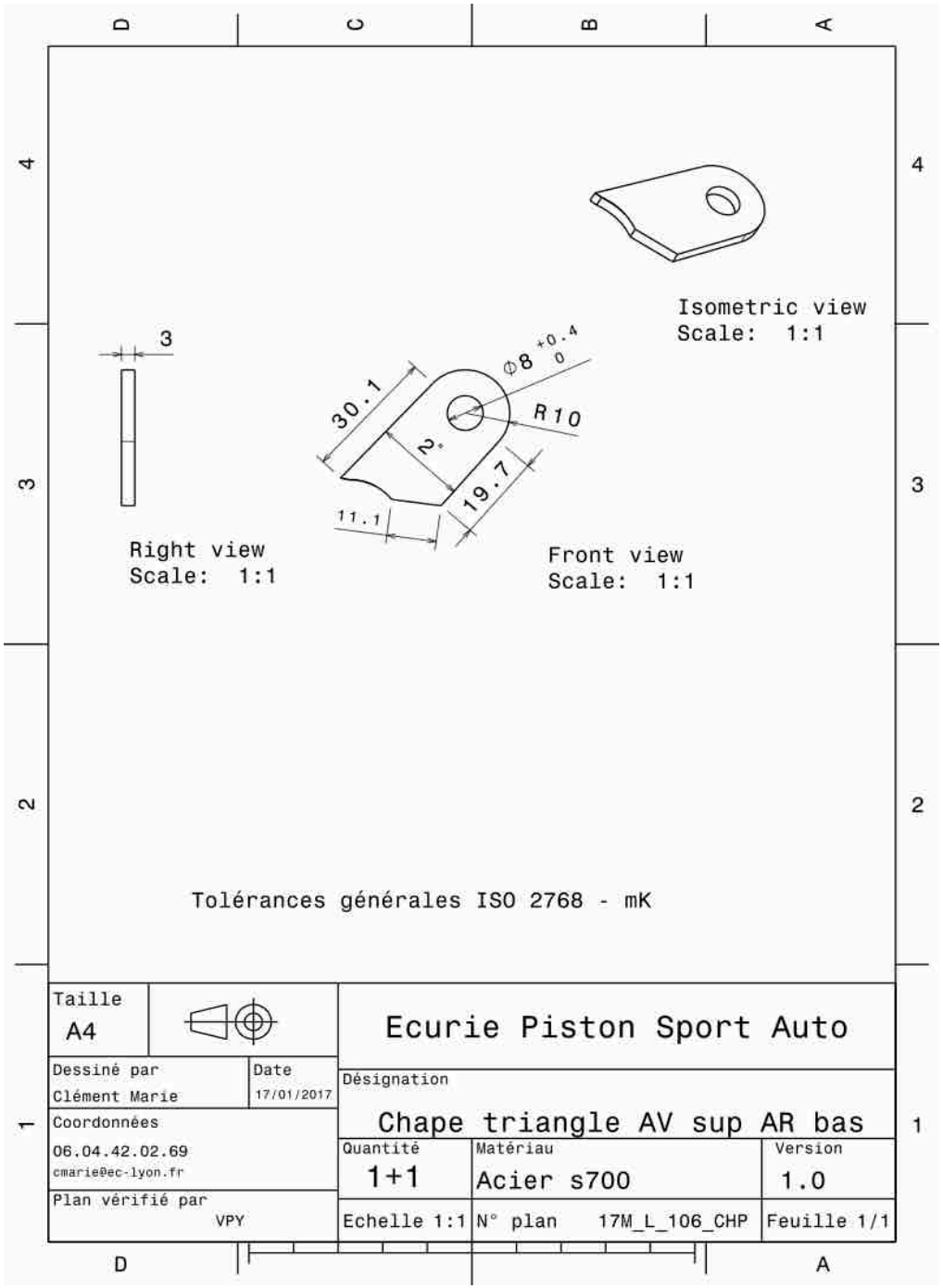
Isometric view
Scale: 1:1
3
Right view
Scale: 1:1
30.1
Ø8 +0.4 0
R10
2.
19.7
11.1
Front view
Scale: 1:1
Tolérances générales ISO 2768 - mK
Taille
A4
Ecurie Piston Sport Auto
Dessiné par
Clément Marie
Date
17/01/2017
Désignation
Chape triangle AV sup AR bas
Coordonnées
06.04.42.02.69
cmarie@ec-lyon.fr
Quantité
1+1
Matériau
Acier s700
Version
1.0
Plan vérifié par
VPY
Echelle 1:1
N° plan 17M_L_106_CHP
Feuille 1/1

University	Ecole Centrale de Lyon	Back to BOM	**Car #**	81	**Asm Cost** $ 57.71
System	Suspension System				**Qty** 2
Assembly	Lower Rear A-Arm		**FileLink1**		
P/N Base	SU A0003		**FileLink2**		**Extended Cost** $ 115.43
Suffix	AA		**FileLink3**		
Details	Steel A-Arm				

ItemOrder	Part	Part Cost	Quantity	Sub Total
10	Simple Bearing Support	$ 1.75	2	$ 3.51
20	Lower Rear Bearing Support	$ 3.45	1	$ 3.45
30	Fore Lower Rear A-Arm Tube	$ 2.60	1	$ 2.60
40	Aft Lower Rear A-Arm Tube	$ 2.46	1	$ 2.46
50	Spacer on Frame Side	$ 0.20	4	$ 0.81
60	Spacer on Upright Side	$ 0.43	2	$ 0.87
70	Fore A Lower Rear A-Arm Mount	$ 1.15	1	$ 1.15
80	Fore B Lower Rear A-Arm Mount	$ 1.16	1	$ 1.16
90	Aft A Lower Rear A-Arm Mount	$ 1.62	1	$ 1.62
100	Aft B Lower Rear A-Arm Mount	$ 1.71	1	$ 1.71
			Sub Total	**$ 19.35**

ItemOrder	Material	Use	UnitCost	Size1	Unit1	Size2	Unit2	Area Name	Area	Length	Density	Quantity	Sub Total
10	Bearing, Spherical	Link to Upright and Frame	$ 6.92	8	mm							3	$ 20.76
20	Paint	Mounts and A-Arm Painting	$ 10.00									0.044	$ 0.44
30	Adhesive	Glue for Ball Joints – Cost Included in Processes	$ -										$ -
												Sub Total	**$ 21.20**

ItemOrder	Process	Use	UnitCost	Unit	Quantity	Multiplier	Mult. Val.	Sub Total
10	Weld	Steel Mounts Welding	$ 0.15	cm	29			$ 4.35
20	Aerosol Apply	Steel Mounts Painting	$ 5.25	m²	9.20E-03			$ 0.05
30	Weld	Steel Tubes Welding on Ball Joint Supports	$ 0.15	cm	25.6			$ 3.84
40	Brush Apply	Glue Applying on Ball Joint Bores	$ 0.02	cm²	7.5			$ 0.15
50	Assemble, 1kg, Line on Line	Ball Joints in Bores Installation	$ 0.13	Unit	3			$ 0.39
60	Aerosol Apply	A-Arm Painting	$ 5.25	m²	3.09E-02			$ 0.16
70	Assemble,1kg, Loose	A-Arm Positioning on Mounts	$ 0.06	Unit	1			$ 0.06
80	Assemble, 1kg, Line on Line	Spacers Installation on Mounts	$ 0.13	Unit	4			$ 0.52
90	Assemble, 1kg, Line on Line	Washers Installation on Mounts	$ 0.13	Unit	4			$ 0.52
100	Assemble,1kg, Loose	A-Arm Positioning on Upside	$ 0.06	Unit	1			$ 0.06
110	Assemble, 1kg, Line on Line	Spacers Installation on Upside	$ 0.13	Unit	2			$ 0.26
120	Assemble, 1kg, Line on Line	Washers Installation on Upside	$ 0.13	Unit	2			$ 0.26
130	Ratchet <= 25,4mm	M8 Bolts Installation	$ 0.75	Unit	3			$ 2.25
140	Reaction tool <=25,4mm	M8 Nuts Blocking	$ 0.25	Unit	3			$ 0.75
							Sub Total	**$ 13.62**

ItemOrder	Fastener	Use	UnitCost	Size1	Unit1	Size2	Unit2	Quantity	Sub Total
10	Bolt, Grade 8,8 (SAE 5)	A-Arm Fixing Bolts on Frame Side	0.21	8	mm	50	mm	2	$ 0.42
20	Bolt, Grade 8,8 (SAE 5)	A-Arm Fixing Bolts on Upright Side	0.26	8	mm	60	mm	1	$ 0.26
30	Nut, Grade 8,8 (SAE 5)	A-Arm Fixing Nuts	0.04	8	mm			3	$ 0.13
40	Washer, Grade 8,8 (SAE 5)	A-Arm Fixing Washers	0.01	8	mm			6	$ 0.06
								Sub Total	**$ 0.88**

ItemOrder	Tooling	Use	UnitCost	Unit	Quantity	PVF	FractionIncluded	Sub Total
10	Welds - Welding Fixture	Welding Processes	$ 500.00	point	16	3000	1	$ 2.67
							Sub Total	**$ 2.67**

University	Ecole Centrale de Lyon		Back to BOM	**Car #**	81	**Part Cost**	$	1.75
System	Suspension System	Drawing :	FileLink1			**Qty**		2
Assembly	Lower Rear A-Arm		**FileLink2**	**FileLink1**				
Part	Simple Bearing Support		**FileLink3**	**FileLink2**		**Extended Cost**	$	3.51
P/N Base	SU 03001			**FileLink3**				
Suffix	AA							
Details								

ItemOrder	Material	Use	UnitCost	Size1	Unit1	Size2	Unit2	Area Name	Area	Length	Density	Quantity	Sub Total
10	Steel, Mild	Material for Part	$ 2.25	0.035	kg			Rectangular 30 x 25 mm	7.50E-04	0.006	7850	1	$ 0.08
												Sub Total	**$ 0.08**

ItemOrder	Process	Use	UnitCost	Unit	Quantity	Multiplier	Mult. Val.	Sub Total
10	Machining Setup, Install and Remove		$ 1.30		1	16 parts made from a single machine setup	0.06	$ 0.08
20	Laser cut	Main shape contouring	$ 0.01	cm	16.73	Material – Steel	3	$ 0.50
30	Machining Setup, Change		$ 0.65		1	16 parts made from a single machine setup	0.06	$ 0.04
40	Reemed hole	Bearing bore Holing	$ 0.35	hole	1	Material – Steel	3	$ 1.05
							Sub Total	**$ 1.67**

University	Ecole Centrale de Lyon		Back to BOM	**Car #**	81	**Part Cost**	$	3.45
System	Suspension System	Drawing :	FileLink1			**Qty**		1
Assembly	Lower Rear A-Arm		**FileLink2**	**FileLink1**				
Part	Lower Rear Bearing Support		**FileLink3**	**FileLink2**		**Extended Cost**	$	3.45
P/N Base	SU 03002			**FileLink3**				
Suffix	AA							
Details								

ItemOrder	Material	Use	UnitCost	Size1	Unit1	Size2	Unit2	Area Name	Area	Length	Density	Quantity	Sub Total
10	Steel, Mild	Material for Part	$ 2.25	0.157	kg			Rectangular 52 x 64 mm	3.33E-03	0.006	7850	1	$ 0.35
												Sub Total	**$ 0.35**

ItemOrder	Process	Use	UnitCost	Unit	Quantity	Multiplier	Mult. Val.	Sub Total
10	Machining Setup, Install and Remove		$ 1.30		1	2 parts made from a single machine setup	0.50	$ 0.65
20	Laser cut	Main shape contouring	$ 0.01	cm	24.84	Material – Steel	3	$ 0.75
30	Machining Setup, Change		$ 0.65		1		1	$ 0.65
40	Reemed hole	Bearing bore Holing	$ 0.35	hole	1	Material – Steel	3	$ 1.05
							Sub Total	**$ 3.10**

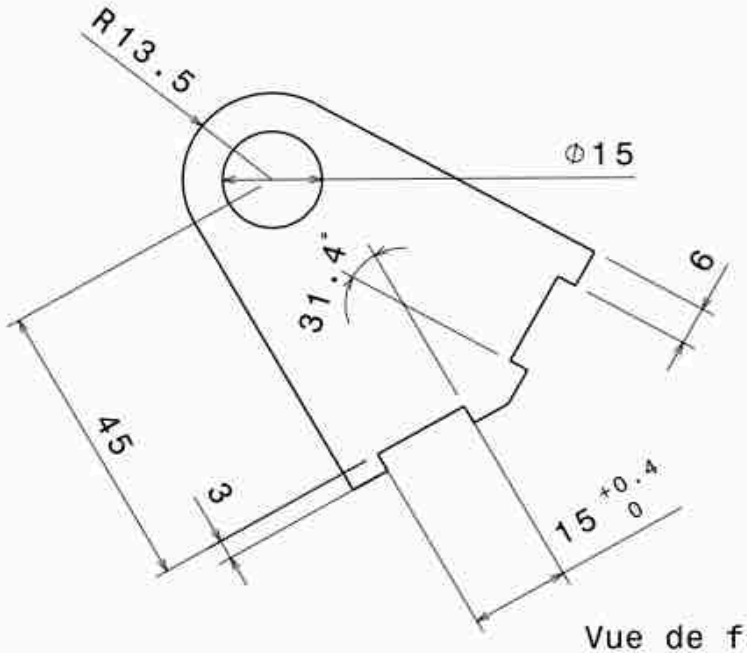

Vue de face
Echelle : 1:1

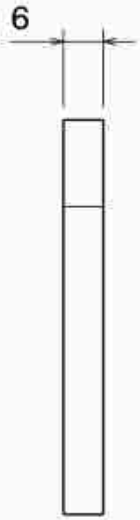

Vue de gauche
Echelle : 1:1

Tolérances générales ISO 2768 mk

Taille A4		Ecurie Piston Sport Auto	
Dessiné par Jean-Cassien	Date 10/01/2017	Désignation Insert triangle Ar Bas	
Coordonnées 06 35 90 81 12 jean.duhil-de-benaze@ecl15.ec-lyon.fr		Quantité 2	Matériau Acier S500	Version v1.0
Plan vérifié par PBT		Echelle 1:1	N° plan 17M_L_077_IRL	Feuille 1/1

University	Ecole Centrale de Lyon			Back to BOM	**Car #**	81	**Part Cost**	$	2.60
System	Suspension System	Drawing :	FileLink1				**Qty**		1
Assembly	Lower Rear A-Arm		**FileLink2**		**FileLink1**				
Part	Fore Lower Rear A-Arm Tube		**FileLink3**		**FileLink2**		**Extended Cost**	$	2.60
P/N Base	SU 03003				**FileLink3**				
Suffix	AA								
Details									

ItemOrder	Material	Use	UnitCost	Size1	Unit1	Size2	Unit2	Area Name	Area	Length	Density	Quantity	Sub Total
10	Steel, Alloy	Material for Part	$ 2.25	0.162	kg			Cylindrical 15x1,5mm	6.36E-05	0.324	7850	1	$ 0.36
												Sub Total	**$ 0.36**

ItemOrder	Process	Use	UnitCost	Unit	Quantity	Multiplier	Mult. Val.	Sub Total
10	Tube cut		$ 0.15	cm	1.5		1	$ 0.23
20	Machining Setup, Install and Remove		$ 1.30		1		1	$ 1.30
30	Machining	Machining of the End notch of the tube	$ 0.04	Cm³	0.24	Material – Steel	3	$ 0.03
40	Machining Setup, Change		$ 0.65		1		1	$ 0.65
50	Machining	Machining of the End notch of the tube	$ 0.04	Cm³	0.24	Material – Steel	3	$ 0.03
							Sub Total	**$ 2.23**

University	Ecole Centrale de Lyon		Back to BOM	**Car #**	81	**Part Cost**	$ 2.46
System	Suspension System	Drawing :	FileLink1			**Qty**	1
Assembly	Lower Rear A-Arm		**FileLink2**	**FileLink1**			
Part	Aft Lower Rear A-Arm Tube		**FileLink3**	**FileLink2**		**Extended Cost**	$ 2.46
P/N Base	SU 03004			**FileLink3**			
Suffix	AA						
Details							

ItemOrder	Material	Use	UnitCost	Size1	Unit1	Size2	Unit2	Area Name	Area	Length	Density	Quantity	Sub Total
10	Steel, Alloy	Material for Part	$ 2.25	0.102	kg			Cylindrical 15x1,5mm	6.36E-05	0.204	7850	1	$ 0.23
												Sub Total	**$ 0.23**

ItemOrder	Process	Use	UnitCost	Unit	Quantity	Multiplier	Mult. Val.	Sub Total
10	Tube cut		$ 0.15	cm	1.5		1	$ 0.23
20	Machining Setup, Install and Remove		$ 1.30		1		1	$ 1.30
30	Machining	Machining of the End notch of the tube	$ 0.04	Cm^3	0.24	Material – Steel	3	$ 0.03
40	Machining Setup, Change		$ 0.65		1		1	$ 0.65
50	Machining	Machining of the End notch of the tube	$ 0.04	Cm^3	0.24	Material – Steel	3	$ 0.03
							Sub Total	**$ 2.23**

University	Ecole Centrale de Lyon			Back to BOM	**Car #**	81	**Part Cost**	$	0.20
System	Suspension System	Drawing :	FileLink1				**Qty**		4
Assembly	Lower Rear A-Arm		**FileLink2**		**FileLink1**				
Part	Spacer on Frame Side		**FileLink3**		**FileLink2**		**Extended Cost**	$	0.81
P/N Base	SU 03005				**FileLink3**				
Suffix	AA								
Details									

ItemOrder	Material	Use	UnitCost	Size1	Unit1	Size2	Unit2	Area Name	Area	Length	Density	Quantity	Sub Total
10	Steel, Mild	Material for Part	$ 2.25	0.004	kg			Cylindrical 13mm diameter	1.33E-04	0.0035	7850	1	$ 0.01
												Sub Total	**$ 0.01**

ItemOrder	Process	Use	UnitCost	Unit	Quantity	Multiplier	Mult. Val.	Sub Total
10	Machining Setup, Install and remove		$ 1.30		1	8 parts made from a single machine setup	0.13	$ 0.16
20	Machining		$ 0.04	cm^3	0.27	Material – Steel	3	$ 0.03
							Sub Total	**$ 0.20**

University	Ecole Centrale de Lyon		Back to BOM	**Car #**	81	**Part Cost**	$	0.43
System	Suspension System	Drawing :	FileLink1			**Qty**		2
Assembly	Lower Rear A-Arm		**FileLink2**	**FileLink1**				
Part	Spacer on Upright Side		**FileLink3**	**FileLink2**		**Extended Cost**	$	0.87
P/N Base	SU 03006			**FileLink3**				
Suffix	AA							
Details								

ItemOrder	Material	Use	UnitCost	Size1	Unit1	Size2	Unit2	Area Name	Area	Length	Density	Quantity	Sub Total
10	Steel, Mild	Material for Part	$ 2.25	0.010	kg			Cylindrical 14mm diameter	1.54E-04	0.008	7850	1	$ 0.02
												Sub Total	**$ 0.02**

ItemOrder	Process	Use	UnitCost	Unit	Quantity	Multiplier	Mult. Val.	Sub Total
10	Machining Setup, Install and remove		$ 1.30		1	4 parts made from a single machine setup	0.25	$ 0.33
20	Machining		$ 0.04	cm^3	0.72	Material – Steel	3	$ 0.09
							Sub Total	**$ 0.41**

University	Ecole Centrale de Lyon		Back to BOM	**Car #**	81	**Part Cost**	$ 1.15
System	Suspension System	**FileLink1**				**Qty**	1
Assembly	Lower Rear A-Arm	**FileLink2**		**FileLink1**			
Part	Fore A Lower Rear A-Arm Mount	**FileLink3**		**FileLink2**		**Extended Cost**	$ 1.15
P/N Base	SU 03007			**FileLink3**			
Suffix	AA						
Details							

ItemOrder	Material	Use	UnitCost	Size1	Unit1	Size2	Unit2	Area Name	Area	Length	Density	Quantity	Sub Total
10	Steel, Mild	Material for Part	$ 2.25	0.041	kg			Rectangular 36 x 24 mm	8.64E-04	0.006	7850	1	$ 0.09
												Sub Total	**$ 0.09**

ItemOrder	Process	Use	UnitCost	Unit	Quantity	Multiplier	Mult. Val.	Sub Total
10	Machining Setup, Install and Remove		$ 1.30		1	2 parts made from a single machine setup	0.5	$ 0.65
20	Laser cut	Main shape contouring	$ 0.01	cm	13.75	Material – Steel	3	$ 0.41
							Sub Total	**$ 1.06**

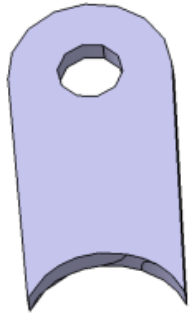

University	Ecole Centrale de Lyon		Back to BOM	**Car #**	81	**Part Cost**	$ 1.16
System	Suspension System	**FileLink1**				**Qty**	1
Assembly	Lower Rear A-Arm	**FileLink2**		**FileLink1**			
Part	Fore B Lower Rear A-Arm Mount	**FileLink3**		**FileLink2**		**Extended Cost**	$ 1.16
P/N Base	SU 03008			**FileLink3**			
Suffix	AA						
Details							

ItemOrder	Material	Use	UnitCost	Size1	Unit1	Size2	Unit2	Area Name	Area	Length	Density	Quantity	Sub Total
10	Steel, Mild	Material for Part	$ 2.25	0.047	kg			Rectangular 22 x 45 mm	9.90E-04	0.006	7850	1	$ 0.10
												Sub Total	**$ 0.10**

ItemOrder	Process	Use	UnitCost	Unit	Quantity	Multiplier	Mult. Val.	Sub Total
10	Machining Setup, Install and Remove		$ 1.30		1	2 parts made from a single machine setup	0.5	$ 0.65
20	Laser cut	Main shape contouring	$ 0.01	cm	13.65	Material – Steel	3	$ 0.41
							Sub Total	**$ 1.06**

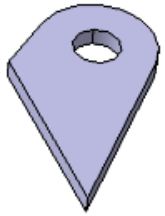

University	Ecole Centrale de Lyon		Back to BOM	**Car #**	81	**Part Cost**	$ 1.62
System	Suspension System	**FileLink1**				**Qty**	1
Assembly	Lower Rear A-Arm	**FileLink2**		**FileLink1**			
Part	Aft A Lower Rear A-Arm Mount	**FileLink3**		**FileLink2**		**Extended Cost**	$ 1.62
P/N Base	SU 03009			**FileLink3**			
Suffix	AA						
Details							

ItemOrder	Material	Use	UnitCost	Size1	Unit1	Size2	Unit2	Area Name	Area	Length	Density	Quantity	Sub Total
10	Steel, Mild	Material for Part	$ 2.25	0.114	kg			Rectangular 39 x 62 mm	2.42E-03	0.006	7850	1	$ 0.26
												Sub Total	**$ 0.26**

ItemOrder	Process	Use	UnitCost	Unit	Quantity	Multiplier	Mult. Val.	Sub Total
10	Machining Setup, Install and Remove		$ 1.30		1	2 parts made from a single machine setup	0.5	$ 0.65
20	Laser cut	Main shape contouring	$ 0.01	cm	23.81	Material – Steel	3	$ 0.71
							Sub Total	**$ 1.36**

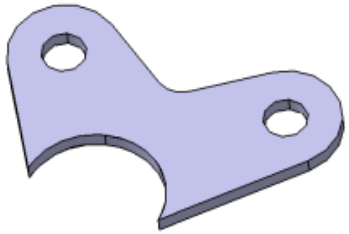

University	Ecole Centrale de Lyon		Back to BOM	**Car #**	81	**Part Cost**	$ 1.71
System	Suspension System	**FileLink1**				**Qty**	1
Assembly	Lower Rear A-Arm	**FileLink2**		**FileLink1**			
Part	Aft B Lower Rear A-Arm Mount	**FileLink3**		**FileLink2**		**Extended Cost**	$ 1.71
P/N Base	SU 03010			**FileLink3**			
Suffix	AA						
Details							

ItemOrder	Material	Use	UnitCost	Size1	Unit1	Size2	Unit2	Area Name	Area	Length	Density	Quantity	Sub Total
10	Steel, Mild	Material for Part	$ 2.25	0.148	kg			Rectangular 55 x 57 mm	3.14E-03	0.006	7850	1	$ 0.33
												Sub Total	**$ 0.33**

ItemOrder	Process	Use	UnitCost	Unit	Quantity	Multiplier	Mult. Val.	Sub Total
10	Machining Setup, Install and Remove		$ 1.30		1	2 parts made from a single machine setup	0.5	$ 0.65
20	Laser cut	Main shape contouring	$ 0.01	cm	24.41	Material – Steel	3	$ 0.73
							Sub Total	**$ 1.38**

University	Ecole Centrale de Lyon	Back to BOM	**Car #**	81	**Asm Cost**	$	61.59
System	Suspension System				**Qty**		2
Assembly	Upper Rear A-Arm		**FileLink1**				
P/N Base	SU A0004		**FileLink2**		**Extended Cost**	$	123.19
Suffix	AA		**FileLink3**				
Details	Steel A-Arm						

ItemOrder	Part	Part Cost	Quantity	Sub Total
10	Simple Bearing Support	$ 1.75	2	$ 3.51
20	Upper Rear Bearing Support	$ 3.82	1	$ 3.82
30	Fore Upper Rear A-Arm Tube	$ 2.55	1	$ 2.55
40	Aft Upper Rear A-Arm Tube	$ 2.41	1	$ 2.41
50	Rear Pull-Rod Mount	$ 0.78	2	$ 1.56
60	Spacer on Frame Side	$ 0.20	4	$ 0.81
70	Spacer on Upright Side	$ 0.50	2	$ 1.00
80	Fore A Upper Rear A-Arm Mount	$ 1.04	1	$ 1.04
90	Fore B Upper Rear A-Arm Mount	$ 1.20	1	$ 1.20
100	Aft A Upper Rear A-Arm Mount	$ 1.13	1	$ 1.13
110	Aft B Upper Rear A-Arm Mount	$ 1.20	1	$ 1.20
			Sub Total	**$ 20.23**

ItemOrder	Material	Use	UnitCost	Size1	Unit1	Size2	Unit2	Area Name	Area	Length	Density	Quantity	Sub Total
10	Bearing, Spherical	Link to Upright and Frame	$ 6.92	8	mm							3	$ 20.76
20	Paint	Mounts and A-Arm Painting	$ 10.00	0.044	m^2							0.044	$ 0.44
30	Adhesive	Glue for Ball Joints – Cost Included in Processes											$ -
												Sub Total	**$ 21.20**

ItemOrder	Process	Use	UnitCost	Unit	Quantity	Multiplier	Mult. Val.	Sub Total
10	Weld	Steel Mounts Welding	$ 0.15	cm	29			$ 4.35
20	Aerosol Apply	Steel Mounts Painting	$ 5.25	m²	7.16E-03			$ 0.04
30	Weld	Steel Tubes Welding on Ball Joint Supports	$ 0.15	cm	25.6			$ 3.84
40	Weld	Pull-Rod Mount Welding on Ball Joint Support	$ 0.15	cm	16			$ 2.40
50	Brush Apply	Glue Applying on Ball Joint Bores	$ 0.02	cm²	7.5			$ 0.15
60	Assemble, 1kg, Line on Line	Ball Joints in Bores Installation	$ 0.13	Unit	3			$ 0.39
70	Aerosol Apply	A-Arm Painting	$ 5.25	m²	3.72E-02			$ 0.20
80	Assemble,1kg, Loose	A-Arm Positioning on Mounts	$ 0.06	Unit	1			$ 0.06
90	Assemble, 1kg, Line on Line	Spacers Installation on Mounts	$ 0.13	Unit	4			$ 0.52
100	Assemble, 1kg, Line on Line	Washers Installation on Mounts	$ 0.13	Unit	4			$ 0.52
110	Assemble,1kg, Loose	A-Arm Positioning on Upside	$ 0.06	Unit	1			$ 0.06
120	Assemble, 1kg, Line on Line	Spacers Installation on Upside	$ 0.13	Unit	2			$ 0.26
130	Assemble, 1kg, Line on Line	Washers Installation on Upside	$ 0.13	Unit	2			$ 0.26
140	Ratchet <= 25,4mm	M8 Bolts Installation	$ 0.75	Unit	3			$ 2.25
150	Reaction tool <=25,4mm	M8 Nuts Blocking	$ 0.25	Unit	3			$ 0.75
							Sub Total	**$ 16.04**

ItemOrder	Fastener	Use	UnitCost	Size1	Unit1	Size2	Unit2	Quantity	Sub Total
10	Bolt, Grade 8,8 (SAE 5)	A-Arm Fixing Bolts on Frame Side	0.16	8	mm	40	mm	2	$ 0.32
20	Bolt, Grade 8,8 (SAE 5)	A-Arm Fixing Bolts on Upright Side	0.26	8	mm	60	mm	1	$ 0.26
30	Nut, Grade 8,8 (SAE 5)	A-Arm Fixing Nuts	0.04	8	mm			3	$ 0.13
40	Washer, Grade 8,8 (SAE 5)	A-Arm Fixing Washers	0.01	8	mm			6	$ 0.06
								Sub Total	**$ 0.78**

ItemOrder	Tooling	Use	UnitCost	Unit	Quantity	PVF	FractionIncluded	Sub Total
10	Welds - Welding Fixture	Welding Processes	$ 500.00	point	20	3000	1	$ 3.33
							Sub Total	**$ 3.33**

University	Ecole Centrale de Lyon		Back to BOM	**Car #**	81	**Part Cost**	$	1.75
System	Suspension System	Drawing :	FileLink1			**Qty**		2
Assembly	Upper Rear A-Arm		**FileLink2**	**FileLink1**				
Part	Simple Bearing Support		**FileLink3**	**FileLink2**		**Extended Cost**	$	3.51
P/N Base	SU 04001			**FileLink3**				
Suffix	AA							
Details								

ItemOrder	Material	Use	UnitCost	Size1	Unit1	Size2	Unit2	Area Name	Area	Length	Density	Quantity	Sub Total
10	Steel, Mild	Material for Part	$ 2.25	0.035	kg			Rectangular 30 x 25 mm	7.50E-04	0.006	7850	1	$ 0.08
												Sub Total	**$ 0.08**

ItemOrder	Process	Use	UnitCost	Unit	Quantity	Multiplier	Mult. Val.	Sub Total
10	Machining Setup, Install and Remove		$ 1.30		1	16 parts made from a single machine setup	0.06	$ 0.08
20	Laser cut	Main shape contouring	$ 0.01	cm	16.73	Material – Steel	3	$ 0.50
30	Machining Setup, Change		$ 0.65		1	16 parts made from a single machine setup	0.06	$ 0.04
40	Reemed hole	Bearing bore Holing	$ 0.35	hole	1	Material – Steel	3	$ 1.05
							Sub Total	**$ 1.67**

University	Ecole Centrale de Lyon			Back to BOM	**Car #**	81	**Part Cost**	$	3.82
System	Suspension System	Drawing :	FileLink1				**Qty**		1
Assembly	Upper Rear A-Arm		**FileLink2**		**FileLink1**				
Part	Upper Rear Bearing Support		**FileLink3**		**FileLink2**		**Extended Cost**	$	3.82
P/N Base	SU 04002				**FileLink3**				
Suffix	AA								
Details									

ItemOrder	Material	Use	UnitCost	Size1	Unit1	Size2	Unit2	Area Name	Area	Length	Density	Quantity	Sub Total
10	Steel, Mild	Material for Part	$ 2.25	0.274	kg			Rectangular 66 x 88 mm	5.81E-03	0.006	7850	1	$ 0.62
												Sub Total	**$ 0.62**

ItemOrder	Process	Use	UnitCost	Unit	Quantity	Multiplier	Mult. Val.	Sub Total
10	Machining Setup, Install and Remove		$ 1.30		1	2 parts made from a single machine setup	0.5	$ 0.65
20	Laser cut	Main shape contouring	$ 0.01	cm	39.24	Material – Steel	3	$ 1.18
30	Machining Setup, Change		$ 0.65		1	2 parts made from a single machine setup	0.5	$ 0.33
40	Reemed hole	Bearing bore Holing	$ 0.35	hole	1	Material – Steel	3	$ 1.05
							Sub Total	**$ 3.20**

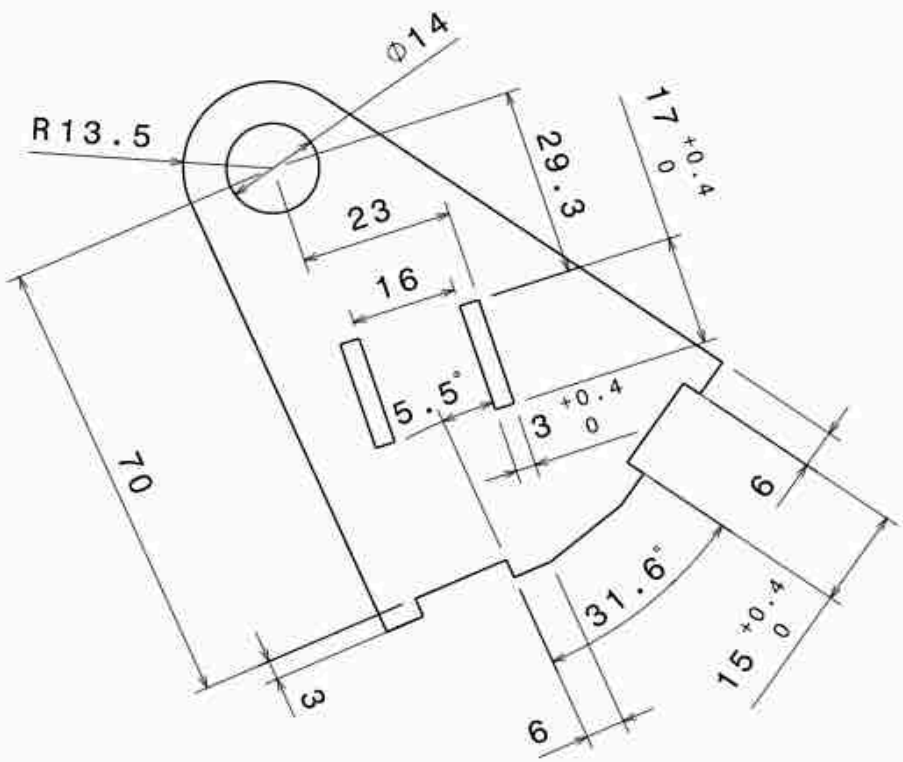

Vue de face
Echelle : 1:1

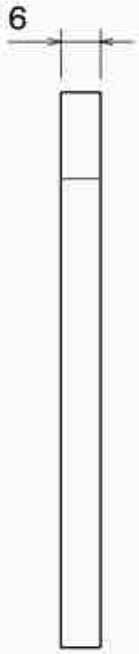

Vue gauche
Echelle : 1:1

Tolérances générales ISO 2768 mk

Taille A4		Ecurie Piston Sport Auto	
Dessiné par Jean-Cassien	Date 10/01/2017	Désignation Insert Triangle Arrière Haut	
Coordonnées 06 35 90 81 12 jean.duhil-de-benaze@ecl15.ec-lyon.fr		Quantité 2	Matériau Acier S500	Version v1.0
Plan vérifié par PBT		Echelle 1:1	N° plan 17M_L_076_IRU	Feuille 1/1

University	Ecole Centrale de Lyon			Back to BOM	**Car #**	81	**Part Cost**	$	2.55
System	Suspension System	Drawing :	FileLink1				**Qty**		1
Assembly	Upper Rear A-Arm		**FileLink2**		**FileLink1**				
Part	Fore Upper Rear A-Arm Tube		**FileLink3**		**FileLink2**		**Extended Cost**	$	2.55
P/N Base	SU 04003				**FileLink3**				
Suffix	AA								
Details									

ItemOrder	Material	Use	UnitCost	Size1	Unit1	Size2	Unit2	Area Name	Area	Length	Density	Quantity	Sub Total
10	Steel, Alloy	Material for Part	$ 2.25	0.142	kg			Cylindrical 15x1,5mm	6.36E-05	0.285	7850	1	$ 0.32
												Sub Total	**$ 0.32**

ItemOrder	Process	Use	UnitCost	Unit	Quantity	Multiplier	Mult. Val.	Sub Total
10	Tube cut		$ 0.15	cm	1.5		1	$ 0.23
20	Machining Setup, Install and Remove		$ 1.30		1		1	$ 1.30
30	Machining	Machining of the End notch of the tube	$ 0.04	Cm³	0.24	Material – Steel	3	$ 0.03
40	Machining Setup, Change		$ 0.65		1		1	$ 0.65
50	Machining	Machining of the End notch of the tube	$ 0.04	Cm³	0.24	Material – Steel	3	$ 0.03
							Sub Total	**$ 2.23**

University	Ecole Centrale de Lyon		Back to BOM	**Car #**	81	**Part Cost**	$ 2.41
System	Suspension System	Drawing :	FileLink1			**Qty**	1
Assembly	Upper Rear A-Arm		**FileLink2**	**FileLink1**			
Part	Aft Upper Rear A-Arm Tube		**FileLink3**	**FileLink2**		**Extended Cost**	$ 2.41
P/N Base	SU 04004			**FileLink3**			
Suffix	AA						
Details							

ItemOrder	Material	Use	UnitCost	Size1	Unit1	Size2	Unit2	Area Name	Area	Length	Density	Quantity	Sub Total
10	Steel, Alloy	Material for Part	$ 2.25	0.079	kg			Cylindrical 15x1,5mm	6.36E-05	0.158	7850	1	$ 0.18
												Sub Total	**$ 0.18**

ItemOrder	Process	Use	UnitCost	Unit	Quantity	Multiplier	Mult. Val.	Sub Total
10	Tube cut		$ 0.15	cm	1.5		1	$ 0.23
20	Machining Setup, Install and Remove		$ 1.30		1		1	$ 1.30
30	Machining	Machining of the End notch of the tube	$ 0.04	Cm^3	0.24	Material – Steel	3	$ 0.03
40	Machining Setup, Change		$ 0.65		1		1	$ 0.65
50	Machining	Machining of the End notch of the tube	$ 0.04	Cm^3	0.24	Material – Steel	3	$ 0.03
							Sub Total	**$ 2.23**

University	Ecole Centrale de Lyon		Back to BOM	**Car #**	81	**Part Cost**	$ 0.78
System	Suspension System	Drawing :	FileLink1			**Qty**	2
Assembly	Upper Rear A-Arm	**FileLink2**		**FileLink1**			
Part	Rear Pull-Rod Mount	**FileLink3**		**FileLink2**		**Extended Cost**	$ 1.56
P/N Base	SU 04005			**FileLink3**			
Suffix	AA						
Details							

ItemOrder	Material	Use	UnitCost	Size1	Unit1	Size2	Unit2	Area Name	Area	Length	Density	Quantity	Sub Total
10	Steel, Mild	Material for Part	$ 2.25	0.021	kg			Rectangular 21 x 42 mm	8.82E-04	0.003	7850	1	$ 0.05
												Sub Total	**$ 0.05**

ItemOrder	Process	Use	UnitCost	Unit	Quantity	Multiplier	Mult. Val.	Sub Total
10	Machining Setup, Install and Remove		$ 1.30		1	4 parts made from a single machine setup	0.25	$ 0.33
20	Laser cut	Main shape contouring	$ 0.01	cm	13.6	Material – Steel	3	$ 0.41
							Sub Total	**$ 0.73**

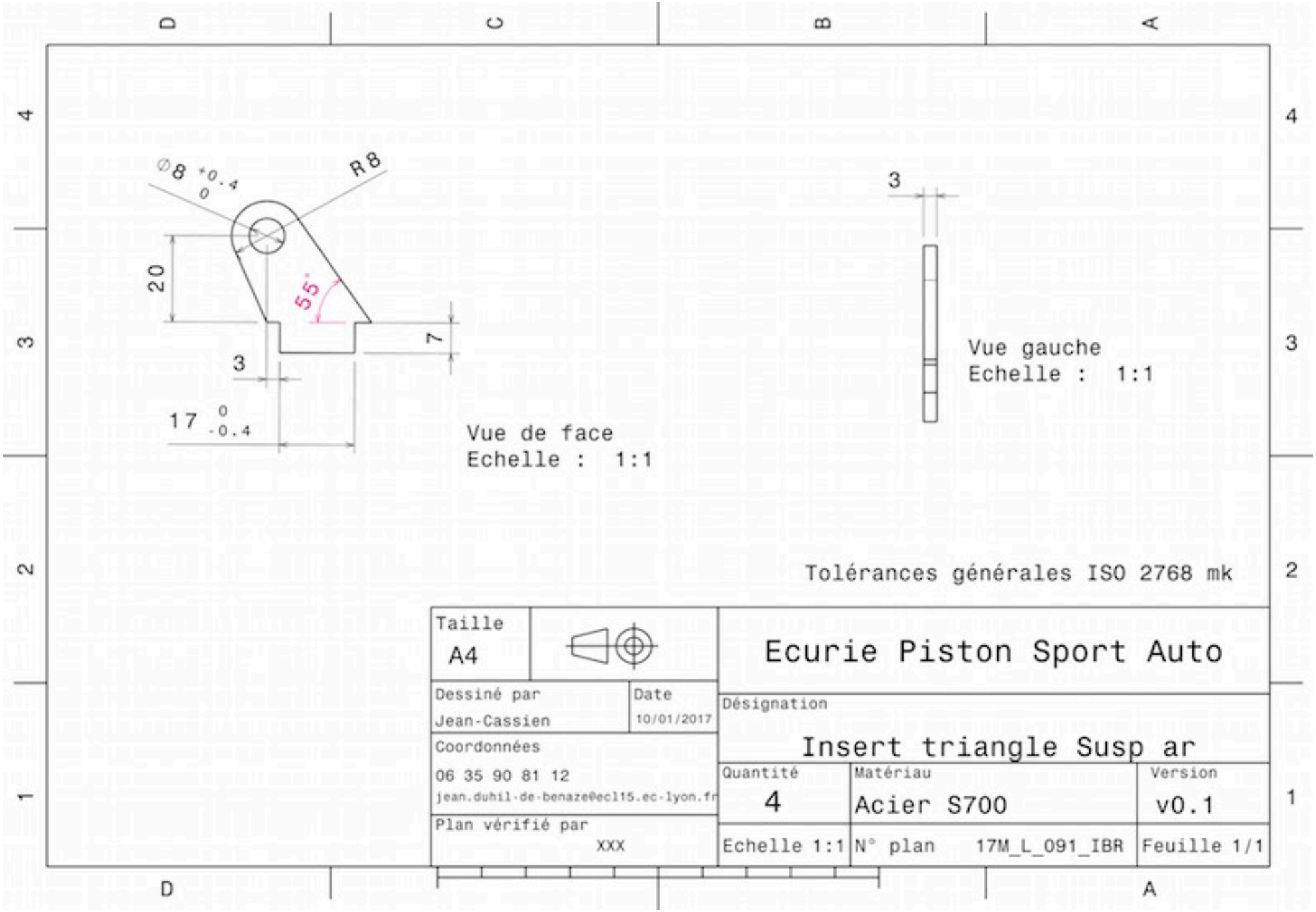
Ø8 +0.4 0
R8
20
55°
7
3
17 0 -0.4
Vue de face
Echelle : 1:1
3
Vue gauche
Echelle : 1:1
Tolérances générales ISO 2768 mk
Taille
A4
Ecurie Piston Sport Auto
Dessiné par
Jean-Cassien
Date
10/01/2017
Désignation
Insert triangle Susp ar
Coordonnées
06 35 90 81 12
jean.duhil-de-benaze@ecl15.ec-lyon.fr
Quantité
4
Matériau
Acier S700
Version
v0.1
Plan vérifié par
XXX
Echelle 1:1
N° plan
17M_L_091_IBR
Feuille 1/1

University	Ecole Centrale de Lyon		Back to BOM	**Car #**	81	**Part Cost**	$	0.20
System	Suspension System	Drawing :	FileLink1			**Qty**		4
Assembly	Upper Rear A-Arm		**FileLink2**	**FileLink1**				
Part	Spacer on Frame Side		**FileLink3**	**FileLink2**		**Extended Cost**	$	0.81
P/N Base	SU 04006			**FileLink3**				
Suffix	AA							
Details								

ItemOrder	Material	Use	UnitCost	Size1	Unit1	Size2	Unit2	Area Name	Area	Length	Density	Quantity	Sub Total
10	Steel, Mild	Material for Part	$ 2.25	0.004	kg			Cylindrical 13mm diameter	1.33E-04	0.0035	7850	1	$ 0.01
												Sub Total	**$ 0.01**

ItemOrder	Process	Use	UnitCost	Unit	Quantity	Multiplier	Mult. Val.	Sub Total
10	Machining Setup, Install and remove		$ 1.30		1	8 parts made from a single machine setup	0.13	$ 0.16
20	Machining		$ 0.04	cm^3	0.27	Material – Steel	3	$ 0.03
							Sub Total	**$ 0.20**

University	Ecole Centrale de Lyon		Back to BOM	**Car #**	81	**Part Cost**	$	0.50
System	Suspension System	Drawing :	FileLink1			**Qty**		2
Assembly	Upper Rear A-Arm		**FileLink2**	**FileLink1**				
Part	Spacer on Upright Side		**FileLink3**	**FileLink2**		**Extended Cost**	$	1.00
P/N Base	SU 04007			**FileLink3**				
Suffix	AA							
Details								

ItemOrder	Material	Use	UnitCost	Size1	Unit1	Size2	Unit2	Area Name	Area	Length	Density	Quantity	Sub Total
10	Steel, Mild	Material for Part	$ 2.25	0.016	kg			Cylindrical 16mm diameter	2.01E-04	0.010	7850	1	$ 0.04
												Sub Total	**$ 0.04**

ItemOrder	Process	Use	UnitCost	Unit	Quantity	Multiplier	Mult. Val.	Sub Total
10	Machining Setup, Install and remove		$ 1.30		1	4 parts made from a single machine setup	0.25	$ 0.33
20	Machining		$ 0.04	cm^3	1.16	Material – Steel	3	$ 0.14
							Sub Total	**$ 0.46**

University	Ecole Centrale de Lyon		Back to BOM	**Car #**	81	**Part Cost**	$ 1.04
System	Suspension System	Drawing :	FileLink1			**Qty**	1
Assembly	Upper Rear A-Arm		**FileLink2**	**FileLink1**			
Part	Fore A Upper Rear A-Arm Mount		**FileLink3**	**FileLink2**		**Extended Cost**	$ 1.04
P/N Base	SU 04008			**FileLink3**			
Suffix	AA						
Details							

ItemOrder	Material	Use	UnitCost	Size1	Unit1	Size2	Unit2	Area Name	Area	Length	Density	Quantity	Sub Total
10	Steel, Mild	Material for Part	$ 2.25	0.017	kg			Rectangular 21 x 35 mm	7.35E-04	0.003	7850	1	$ 0.04
												Sub Total	**$ 0.04**

ItemOrder	Process	Use	UnitCost	Unit	Quantity	Multiplier	Mult. Val.	Sub Total
10	Machining Setup, Install and Remove		$ 1.30		1	2 parts made from a single machine setup	0.5	$ 0.65
20	Laser cut	Main shape contouring	$ 0.01	cm	11.9	Material – Steel	3	$ 0.36
							Sub Total	**$ 1.01**

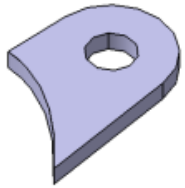

SU 04008

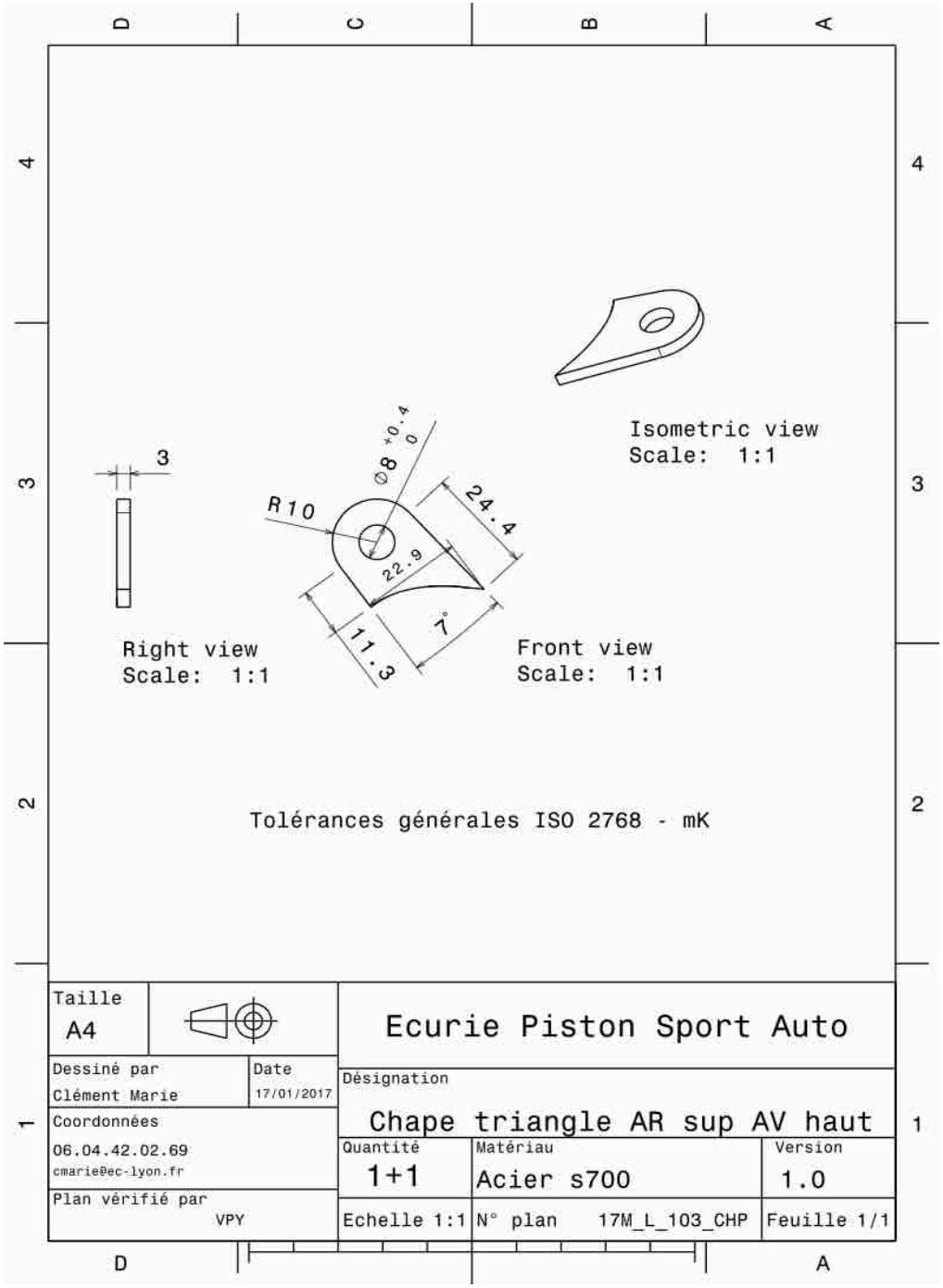
Isometric view
Scale: 1:1
3
R10
Ø8 +0.4 0
24.4
22.9
11.3
7°
Right view
Scale: 1:1
Front view
Scale: 1:1
Tolérances générales ISO 2768 - mK
Taille
A4
Ecurie Piston Sport Auto
Dessiné par
Clément Marie
Date
17/01/2017
Désignation
Chape triangle AR sup AV haut
Coordonnées
06.04.42.02.69
cmarie@ec-lyon.fr
Quantité
1+1
Matériau
Acier s700
Version
1.0
Plan vérifié par
VPY
Echelle 1:1
N° plan 17M_L_103_CHP
Feuille 1/1

University	Ecole Centrale de Lyon			Back to BOM	**Car #**	81	**Part Cost**	$	1.20
System	Suspension System	Drawing :	FileLink1				**Qty**		1
Assembly	Upper Rear A-Arm		**FileLink2**		**FileLink1**				
Part	Fore B Upper Rear A-Arm Mount		**FileLink3**		**FileLink2**		**Extended Cost**	$	1.20
P/N Base	SU 04009				**FileLink3**				
Suffix	AA								
Details									

ItemOrder	Material	Use	UnitCost	Size1	Unit1	Size2	Unit2	Area Name	Area	Length	Density	Quantity	Sub Total
10	Steel, Mild	Material for Part	$ 2.25	0.032	kg			Rectangular 54 x 25 mm	1.35E-03	0.003	7850	1	$ 0.07
												Sub Total	**$ 0.07**

ItemOrder	Process	Use	UnitCost	Unit	Quantity	Multiplier	Mult. Val.	Sub Total
10	Machining Setup, Install and Remove		$ 1.30		1	2 parts made from a single machine setup	0.5	$ 0.65
20	Laser cut	Main shape contouring	$ 0.01	cm	15.9	Material – Steel	3	$ 0.48
							Sub Total	**$ 1.13**

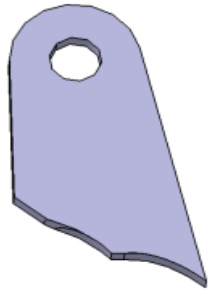

SU 04009

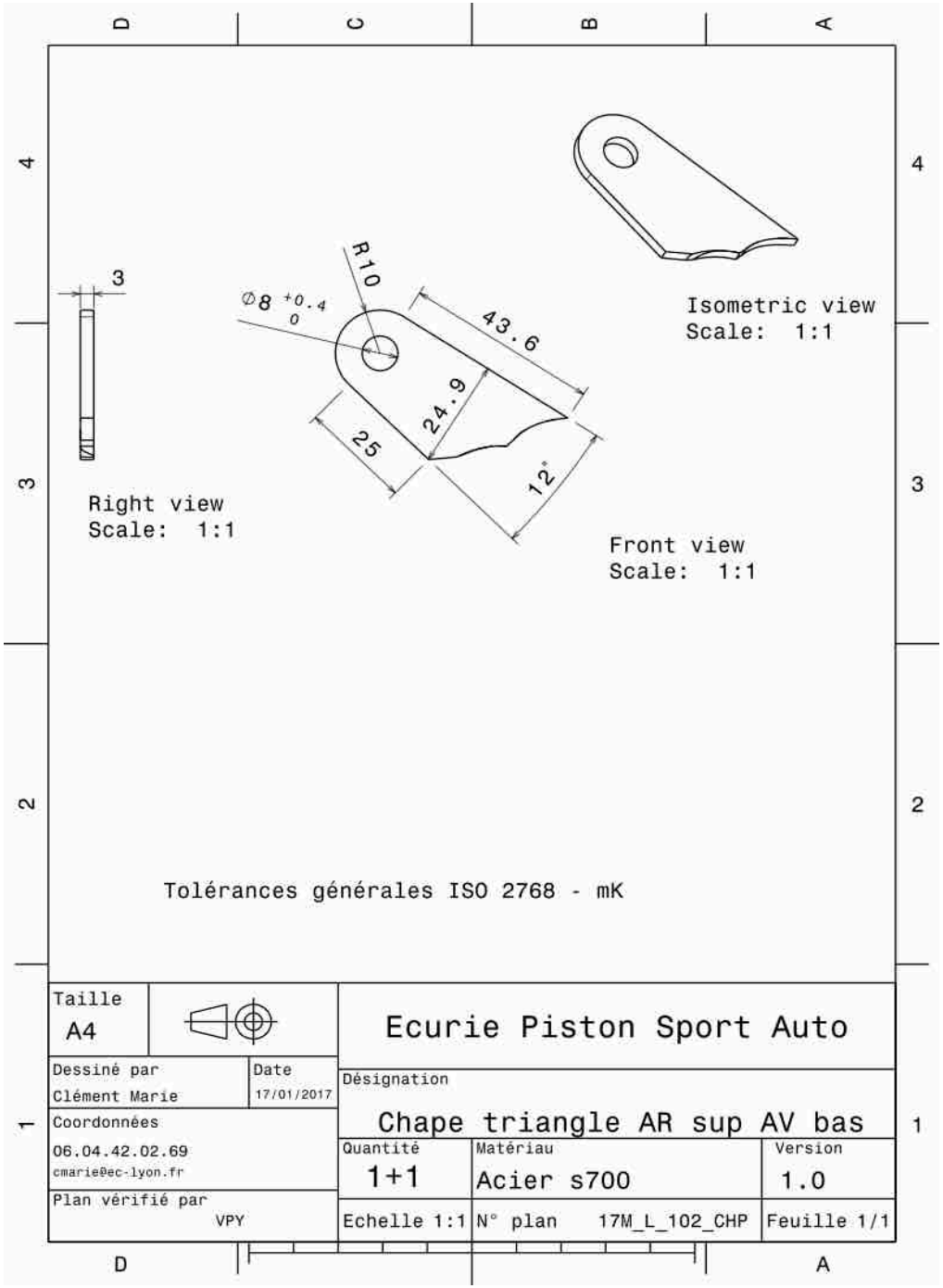
Isometric view
Scale: 1:1
Right view
Scale: 1:1
Front view
Scale: 1:1
R10
Ø8 +0.4 0
43.6
24.9
25
12°
3
Tolérances générales ISO 2768 - mK
Taille
A4
Ecurie Piston Sport Auto
Dessiné par
Clément Marie
Date
17/01/2017
Désignation
Chape triangle AR sup AV bas
Coordonnées
06.04.42.02.69
cmarie@ec-lyon.fr
Quantité
1+1
Matériau
Acier s700
Version
1.0
Plan vérifié par
VPY
Echelle 1:1
N° plan 17M_L_102_CHP
Feuille 1/1

University	Ecole Centrale de Lyon		Back to BOM	**Car #**	81	**Part Cost**	$	1.13
System	Suspension System	Drawing :	FileLink1			**Qty**		1
Assembly	Upper Rear A-Arm	**FileLink2**		**FileLink1**				
Part	Aft A Upper Rear A-Arm Mount	**FileLink3**		**FileLink2**		**Extended Cost**	$	1.13
P/N Base	SU 04010			**FileLink3**				
Suffix	AA							
Details								

ItemOrder	Material	Use	UnitCost	Size1	Unit1	Size2	Unit2	Area Name	Area	Length	Density	Quantity	Sub Total
10	Steel, Mild	Material for Part	$ 2.25	0.023	kg			Rectangular 40 x 24 mm	9.60E-04	0.003	7850	1	$ 0.05
												Sub Total	**$ 0.05**

ItemOrder	Process	Use	UnitCost	Unit	Quantity	Multiplier	Mult. Val.	Sub Total
10	Machining Setup, Install and Remove		$ 1.30		1	2 parts made from a single machine setup	0.5	$ 0.65
20	Laser cut	Main shape contouring	$ 0.01	cm	14.3	Material – Steel	3	$ 0.43
							Sub Total	**$ 1.08**

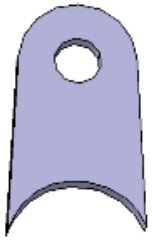

SU 04010

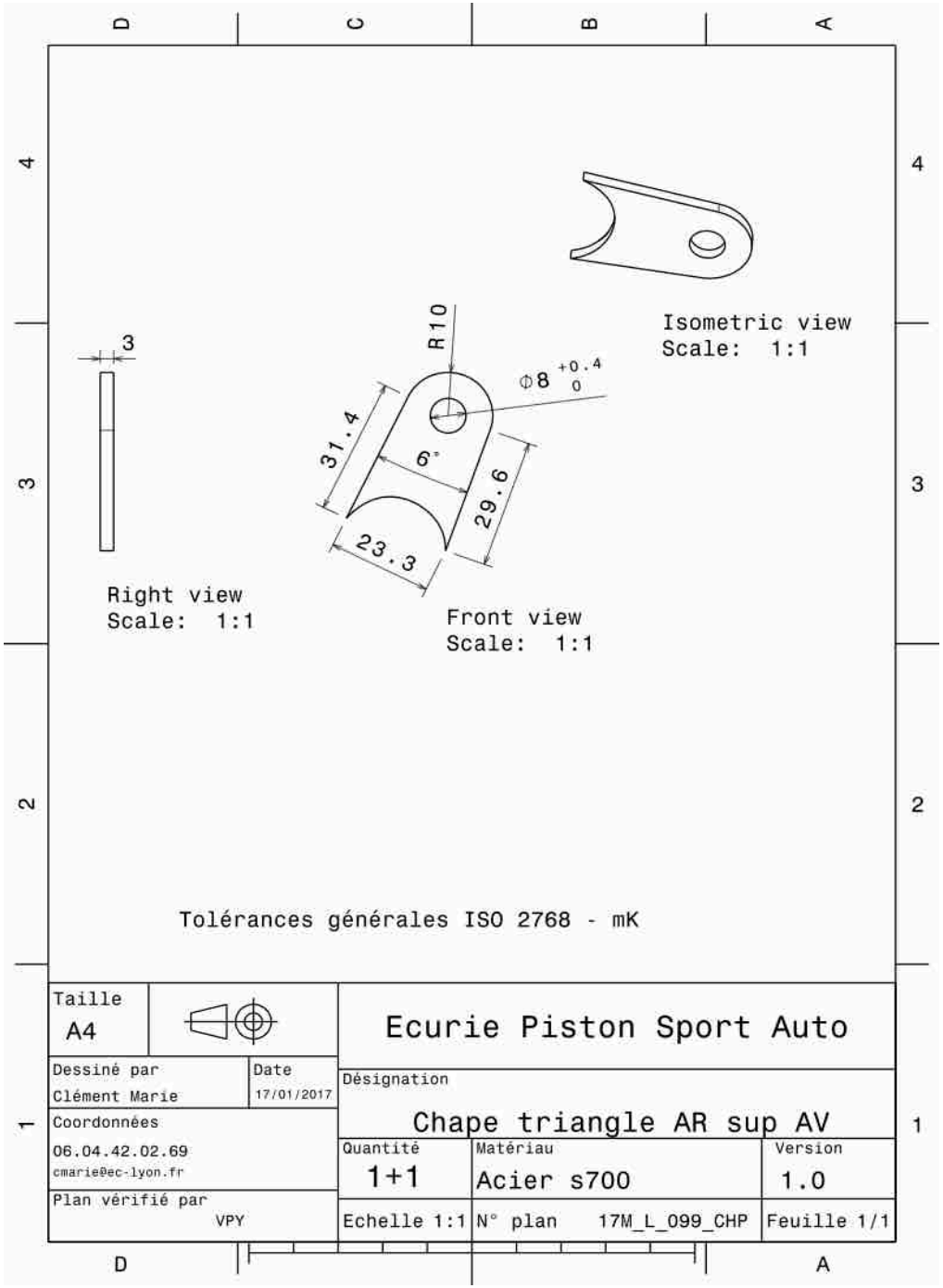
Isometric view
Scale: 1:1
3
Right view
Scale: 1:1
R10
Φ8 +0.4 0
31.4
6°
29.6
23.3
Front view
Scale: 1:1
Tolérances générales ISO 2768 - mK
Taille
A4
Ecurie Piston Sport Auto
Dessiné par
Clément Marie
Date
17/01/2017
Désignation
Chape triangle AR sup AV
Coordonnées
06.04.42.02.69
cmarie@ec-lyon.fr
Quantité
1+1
Matériau
Acier s700
Version
1.0
Plan vérifié par
VPY
Echelle 1:1
N° plan 17M_L_099_CHP
Feuille 1/1

University	Ecole Centrale de Lyon		Back to BOM	**Car #**	81	**Part Cost**	$	1.20
System	Suspension System	Drawing :	FileLink1			**Qty**		1
Assembly	Upper Rear A-Arm		**FileLink2**	**FileLink1**				
Part	Aft B Upper Rear A-Arm Mount		**FileLink3**	**FileLink2**		**Extended Cost**	$	1.20
P/N Base	SU 04011			**FileLink3**				
Suffix	AA							
Details								

ItemOrder	Material	Use	UnitCost	Size1	Unit1	Size2	Unit2	Area Name	Area	Length	Density	Quantity	Sub Total
10	Steel, Mild	Material for Part	$ 2.25	0.03	m	0.024	m	Rectangular 46 x 24 mm	1.10E-03	0.003	7850	1	$ 0.06
												Sub Total	**$ 0.06**

ItemOrder	Process	Use	UnitCost	Unit	Quantity	Multiplier	Mult. Val.	Sub Total
10	Machining Setup, Install and Remove		$ 1.30		1	2 parts made from a single machine setup	0.5	$ 0.65
20	Laser cut	Main shape contouring	$ 0.01	cm	16.4	Material – Steel	3	$ 0.49
							Sub Total	**$ 1.14**

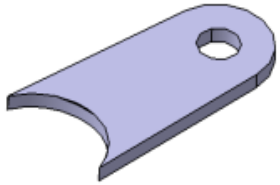

SU 04011

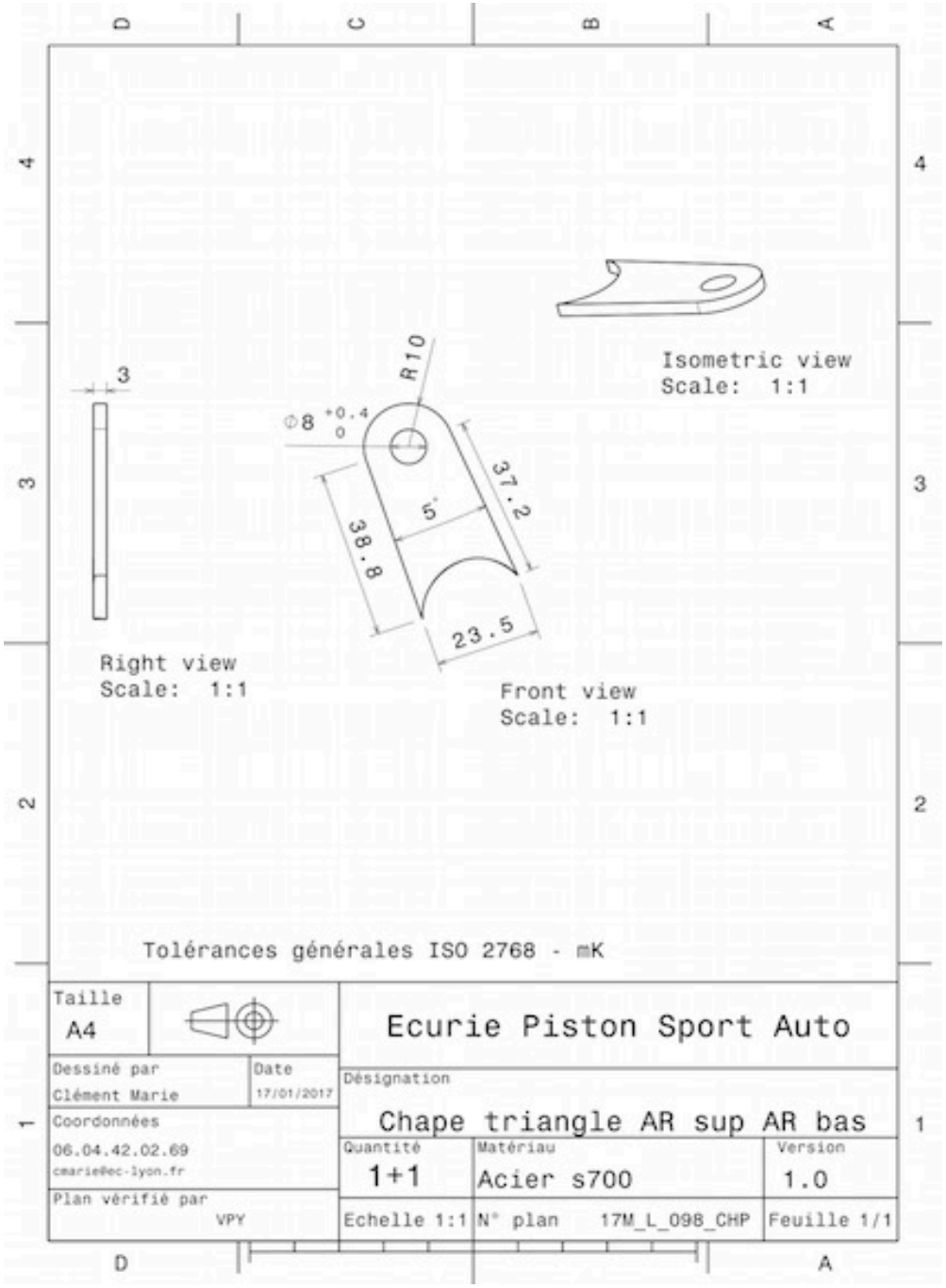
Isometric view
Scale: 1:1
3
R10
Φ8 +0.4 0
37.2
5
38.8
23.5
Right view
Scale: 1:1
Front view
Scale: 1:1
Tolérances générales ISO 2768 - mK
Taille
A4
Ecurie Piston Sport Auto
Dessiné par
Clément Marie
Date
17/01/2017
Désignation
Chape triangle AR sup AR bas
Coordonnées
06.04.42.02.69
cmarie@ec-lyon.fr
Quantité
1+1
Matériau
Acier s700
Version
1.0
Plan vérifié par
VPY
Echelle 1:1
N° plan
17M_L_098_CHP
Feuille 1/1

University	Ecole Centrale de Lyon	Back to BOM	**Car #**	81	**Asm Cost** $ 327.44
System	Suspension System				**Qty** 2
Assembly	Front Suspension		**FileLink1**		
P/N Base	SU A0005		**FileLink2**		**Extended Cost** $ 654.89
Suffix	AA		**FileLink3**		
Details	Front suspension, right and left are symetric				

ItemOrder	Part	Part Cost	Quantity	Sub Total
10	Front Suspension mount	$ 8.11	1	$ 8.11
20	Shock eyelet bushing	$ 1.38	1	$ 1.38
30	End eyelet bushing	$ 1.38	1	$ 1.38
			Sub Total	**$ 10.87**

ItemOrder	Material	Use	UnitCost	Size1	Unit1	Size2	Unit2	Area Name	Area	Length	Density	Quantity	Sub Total
10	Paint	Front suspension mount red paint	$ 10.00	0.007	m^2							1	$ 0.07
20	Damper, Cane Creek Double Barrel Air (DBAir)	Mono-shock front	$ 310.00		unit							1	$ 310.00
												Sub Total	**$ 310.07**

ItemOrder	Process	Use	UnitCost	Unit	Quantity	Multiplier	Mult. Val.	Sub Total
10	Weld	Welding the suspension mount	$ 0.15	cm	14.8		1	$ 2.22
20	Aerosol apply	Painting the suspension mount	$ 5.25	m^2	0.007		1	$ 0.04
30	Assemble, 1kg, Interference	Insert the bushing in the eyelet	$ 0.19	unit	2		1	$ 0.38
40	Assemble, 1kg, Loose	Put the damper in place	$ 0.06	unit	2		1	$ 0.12
50	Hand - Start Only	Bolt damper to suspension mount	$ 0.12	unit	1		1	$ 0.12
60	Hand - Start Only	Bolt damper to rocker	$ 0.12	unit	1		1	$ 0.12
70	Hand - Start Only	Put the nuts into the bolts	$ 0.12	unit	2		1	$ 0.24
80	Ratchet <= 25.4 mm	Thighten the M8 nuts	$ 0.75	unit	2		1	$ 1.50
90	Reaction tool <= 25.4 mm	Thighten the M8 nuts	$ 0.25	unit	2		1	$ 0.50
							Sub Total	**$ 5.24**

ItemOrder	Fastener	Use	UnitCost	Size1	Unit1	Size2	Unit2	Quantity	Sub Total
10	Bolt, grade 12.9	Damper to the suspension mount fixing bolt	$ 0.26	8	mm	40	mm	1	$ 0.26
20	Bolt, grade 12.9	Damper to the rocker fixing bolt	$ 0.26	8	mm	40	mm	1	$ 0.26
30	Nut grade 8.8 (SAE 5)	Nut to tighten the bolts	$ 0.04	8	mm			2	$ 0.08
								Sub Total	**$ 0.60**

ItemOrder	Tooling	Use	UnitCost	Unit	Quantity	PVF	FractionIncluded	Sub Total
10	Welds-Welding fixture	Welding of the mounts	$ 500.00		4	3000	1	$ 0.67
							Sub Total	**$ 0.67**

University	Ecole Centrale de Lyon		Back to BOM	**Car #**	81	**Part Cost**	$ 8.11
System	Suspension System	Drawing :	FileLink1			**Qty**	1
Assembly	Front Suspension	**FileLink2**		**FileLink1**			
Part	Front suspension mount	**FileLink3**		**FileLink2**		**Extended Cost**	$ 8.11
P/N Base	SU 05001			**FileLink3**			
Suffix	AA						
Details	Suspension mount						

ItemOrder	Material	Use	UnitCost	Size1	Unit1	Size2	Unit2	Area Name	Area	Length	Density	Quantity	Sub Total
10	Steel, Mild	Material for mount	$ 2.25	0.415	kg			Rectangular area, 59*28 mm	1.65E-03	0.03	7850	1	$ 0.93
												Sub Total	**$ 0.93**

ItemOrder	Process	Use	UnitCost	Unit	Quantity	Multiplier	Mult. Val.	Sub Total
10	Machining Setup, Install and remove	Setup for machining	$ 1.30	unit	1			$ 1.30
20	Machining	Machining removal	$ 0.04	cm^3	17.81	Material-Steel	3	$ 2.14
30	Machining Setup, change		$ 0.65	unit	1			$ 0.65
40	Machining	Machining removal and tubing cavity	$ 0.04	cm^3	19.94	Material-Steel	3	$ 2.39
60	Drilled holes < 25.4 mm dia.	Holes for assembly	$ 0.35	hole	2			$ 0.70
							Sub Total	**$ 7.18**

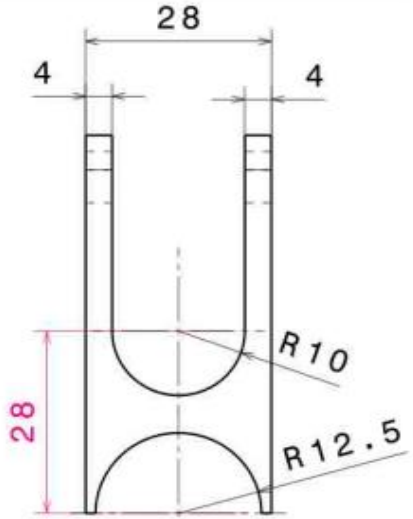

Vue de droite
Echelle : 1:1

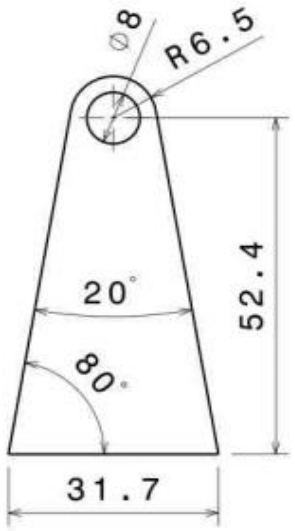

Vue de face
Echelle : 1:1

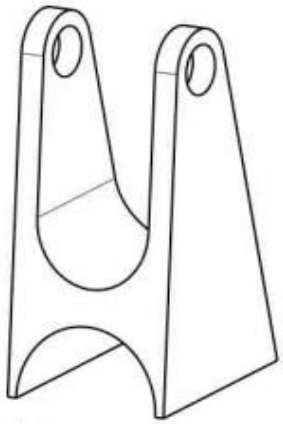

Vue isométrique
Echelle : 1:1

Brut : 31.7*58.9*28
Tolérances générales ISO 2768 mk

Taille A4		Ecurie Piston Sport Auto
Dessiné par Martin Puthod	Date 08/12/2016	Désignation: Chape amortisseur avant
Coordonnées martin.puthod@ecl15.ec-lyon.fr 06 34 31 85 92		Quantité 2 / Matériau Acier S235 / Version 1.0
Plan vérifié par Valentin Pauly		Echelle 1:1 / Plan : 17B_L_047_CAAV / Feuille 1/1

University	Ecole Centrale de Lyon		Back to BOM	**Car #**	81	**Part Cost**	$ 1.38
System	Suspension System	**FileLink1**				**Qty**	1
Assembly	Front Suspension	**FileLink2**		**FileLink1**			
Part	Shock eyelet bushing	**FileLink3**		**FileLink2**		**Extended Cost**	$ 1.38
P/N Base	SU 05002			**FileLink3**			
Suffix	AA						
Details	Bushing for the damper						

ItemOrder	Material	Use	UnitCost	Size1	Unit1	Size2	Unit2	Area Name	Area	Length	Density	Quantity	Sub Total
10	Bronze	Stock material for bushing	$ 2.20	0.024	kg			Round area, diameter 12,7 mm	1.27E-04	0.02	8500	1	$ 0.02
												Sub Total	**$ 0.02**

ItemOrder	Process	Use	UnitCost	Unit	Quantity	Multiplier	Mult. Val.	Sub Total
10	Machining Setup, Install and remove	Setup for machining	$ 1.30	unit	1			$ 1.30
20	Machining	Machining removal	$ 0.04	cm^3	1.105840614	Material-Bronze	1.33	$ 0.06
							Sub Total	**$ 1.36**

University	Ecole Centrale de Lyon		Back to BOM	**Car #**	81	**Part Cost**	$ 1.38
System	Suspension System	**FileLink1**				**Qty**	1
Assembly	Front Suspension	**FileLink2**		**FileLink1**			
Part	End eyelet bushing	**FileLink3**		**FileLink2**		**Extended Cost**	$ 1.38
P/N Base	SU 05003			**FileLink3**			
Suffix	AA						
Details	Bushing for the damper						

ItemOrder	Material	Use	UnitCost	Size1	Unit1	Size2	Unit2	Area Name	Area	Length	Density	Quantity	Sub Total
10	Bronze	Stock material for bushing	$ 2.20	0.022	kg			Round area, diameter 12,7 mm	1.27E-04	0.02	8500	1	$ 0.02
												Sub Total	**$ 0.02**

ItemOrder	Process	Use	UnitCost	Unit	Quantity	Multiplier	Mult. Val.	Sub Total
10	Machining Setup, Install and remove	Setup for machining	$ 1.30	unit	1			$ 1.30
20	Machining	Machining removal	$ 0.04	cm^3	1.01	Material-Bronze	1.33	$ 0.05
							Sub Total	**$ 1.35**

University	Ecole Centrale de Lyon	Back to BOM	**Car #**	81	**Asm Cost** $ 37.24
System	Suspension System				**Qty** 2
Assembly	Front Rocker		**FileLink1**		
P/N Base	SU A0006		**FileLink2**		**Extended Cost** $ 74.49
Suffix	AA		**FileLink3**		
Details	Front Rocker, left and right are symetric				

ItemOrder	Part	Part Cost	Quantity	Sub Total
10	Sheets of metal of the rocker	$ 2.08	2	$ 4.16
20	Front Rocker mount	$ 3.30	1	$ 3.30
30	Rocker bushing	$ 1.68	2	$ 3.36
40	Rocker spacer	$ 0.25	2	$ 0.49
50	Front A-Arm insert spacer	$ 0.28	2	$ 0.57
60	Tierod tube	$ 0.53	1	$ 0.53
70	Tierod insert	$ 1.68	2	$ 3.35
			Sub Total	**$ 15.77**

ItemOrder	Material	Use	UnitCost	Size1	Unit1	Size2	Unit2	Area Name	Area	Length	Density	Quantity	Sub Total
10	Paint	Rocker mount red paint	$ 10.00	0.05	m^2							1	$ 0.50
20	Paint	Tie rod black paint	$ 10.00	0.013	m^2							1	$ 0.13
30	Rod End, Industrial	Right-hand rod end for tie rod extremities	$ 2.50	8	mm			Balls Diameter				1	$ 2.50
40	Rod End, Industrial	Left-hand rod end for tie rod extremities	$ 2.50	8	mm			Balls Diameter				1	$ 2.50
												Sub Total	**$ 5.63**

ItemOrder	Process	Use	UnitCost	Unit	Quantity	Multiplier	Mult. Val.	Sub Total
10	Hand finish - surface preparation	Solvent degreasing on tierod tube	$ 0.02	cm^2	30	Material - Steel	3	$ 1.80
20	Hand finish - surface preparation	Solvent degreasing on tierod insert	$ 0.02	cm^2	18	Material - Steel	3	$ 1.08
30	Weld	Welding the rocker mount on the chassis	$ 0.15	cm	12		1	$ 1.80
40	Weld	Welding the insert to the tube	$ 0.15	cm	4.7	Repeat 2	2	$ 1.41
50	Aerosol apply	Painting of rocker mount in red	$ 5.25	m^2	0.05		1	$ 0.26
60	Aerosol apply	Painting of the tie rod in black	$ 5.25	m^2	0.013		1	$ 0.07
70	Hand - Start Only	Put a nut on the rod end	$ 0.12	unit	2		1	$ 0.24
80	Hand, Loose <= 25.4 mm	Screwing by hand the rod end in the tie rod insert	$ 0.50	unit	2		1	$ 1.00
90	Ratchet <= 25.4 mm	Thighten the M8 nuts	$ 0.75	unit	2		1	$ 1.50
100	Reaction tool <= 25.4 mm	Thighten the M8 nuts	$ 0.25	unit	2		1	$ 0.50
110	Assemble, 1kg, interference	Insert 2 bronze bushings into the rocker mount	$ 0.19	unit	2		1	$ 0.38
120	Assemble, 1kg, Loose	Put the rocker in place	$ 0.06	unit	2		1	$ 0.12
130	Assemble, 1kg, Loose	Put the washer in place	$ 0.06	unit	1		1	$ 0.06
140	Assemble, 1kg, Loose	Put the spacers of the rocker in place	$ 0.06	unit	2		1	$ 0.12
150	Hand - Start Only	Bolt rocker into rocker mount	$ 0.12	unit	1		1	$ 0.12
160	Hand - Start Only	Bolt tierod into rocker	$ 0.12	unit	1		1	$ 0.12
170	Assemble, 1kg, Loose	Put the spacer of the A-Arm insert in place	$ 0.06	unit	1		1	$ 0.06
180	Hand - Start Only	Bolt tierod into A-Arm insert	$ 0.12	unit	1		1	$ 0.12
190	Hand - Start Only	Put the nuts into the bolts	$ 0.12	unit	3		1	$ 0.36
200	Ratchet <= 25.4 mm	Thighten the M8 nuts	$ 0.75	unit	3		1	$ 2.25
210	Reaction tool <= 25.4 mm	Thighten the M8 nuts	$ 0.25	unit	3		1	$ 0.75
							Sub Total	**$ 14.12**

ItemOrder	Fastener	Use	UnitCost	Size1	Unit1	Size2	Unit2	Quantity	Sub Total
10	Bolt, Grade 12.9	Rocker to rocker mount fixing bolt	$ 0.33	8	mm	50	mm	1	$ 0.33
20	Bolt, Grade 12.9	Tierod to rocker fixing bolt	$ 0.26	8	mm	40	mm	1	$ 0.26
30	Bolt, Grade 12.9	Tierod to Front A-Arm insert fixing bolt	$ 0.26	8	mm	40	mm	1	$ 0.26
40	Nut, Grade 8.8 (SAE 5)	To tighten the bolts	$ 0.04	8	mm			3	$ 0.12
50	Nut, Grade 8.8 (SAE 5)	To tighten the rod ends	$ 0.04	8	mm			2	$ 0.08
60	Washer, Grade 8.8 (SAE 5)		$ 0.01	10	mm			1	$ 0.01
								Sub Total	**$ 1.06**

ItemOrder	Tooling	Use	UnitCost	Unit	Quantity	PVF	FractionIncluded	Sub Total
10	Welds -Welding Fixture	Welding process for rocker mount	$ 500.00	point	4	3000	1	$ 0.67
							Sub Total	**$ 0.67**

University	Ecole Centrale de Lyon		Back to BOM	**Car #**	81	**Part Cost**	$	2.08
System	Suspension System	Drawing :	FileLink1			**Qty**		2
Assembly	Front Suspension	**FileLink2**		**FileLink1**				
Part	Sheets of metal of the rocker	**FileLink3**		**FileLink2**		**Extended Cost**	$	4.16
P/N Base	SU 06001			**FileLink3**				
Suffix	AA							
Details								

ItemOrder	Material	Use	UnitCost	Size1	Unit1	Size2	Unit2	Area Name	Area	Length	Density	Quantity	Sub Total
10	Steel, Mild	Material for rocker	$ 2.25	0.148	kg			Rectangular sheet 105*60 mm	6.30E-03	0.003	7850	1	$ 0.33
												Sub Total	**$ 0.33**

ItemOrder	Process	Use	UnitCost	Unit	Quantity	Multiplier	Mult. Val.	Sub Total
10	Machining setup, install and remove	Insert and remove parts from laser	$ 1.30	unit	1	4 parts made from a single machine setup	0.25	$ 0.33
20	Laser cut	Cutting the sheets	$ 0.01	cm	47.4	Material - Steel	3	$ 1.42
							Sub Total	**$ 1.75**

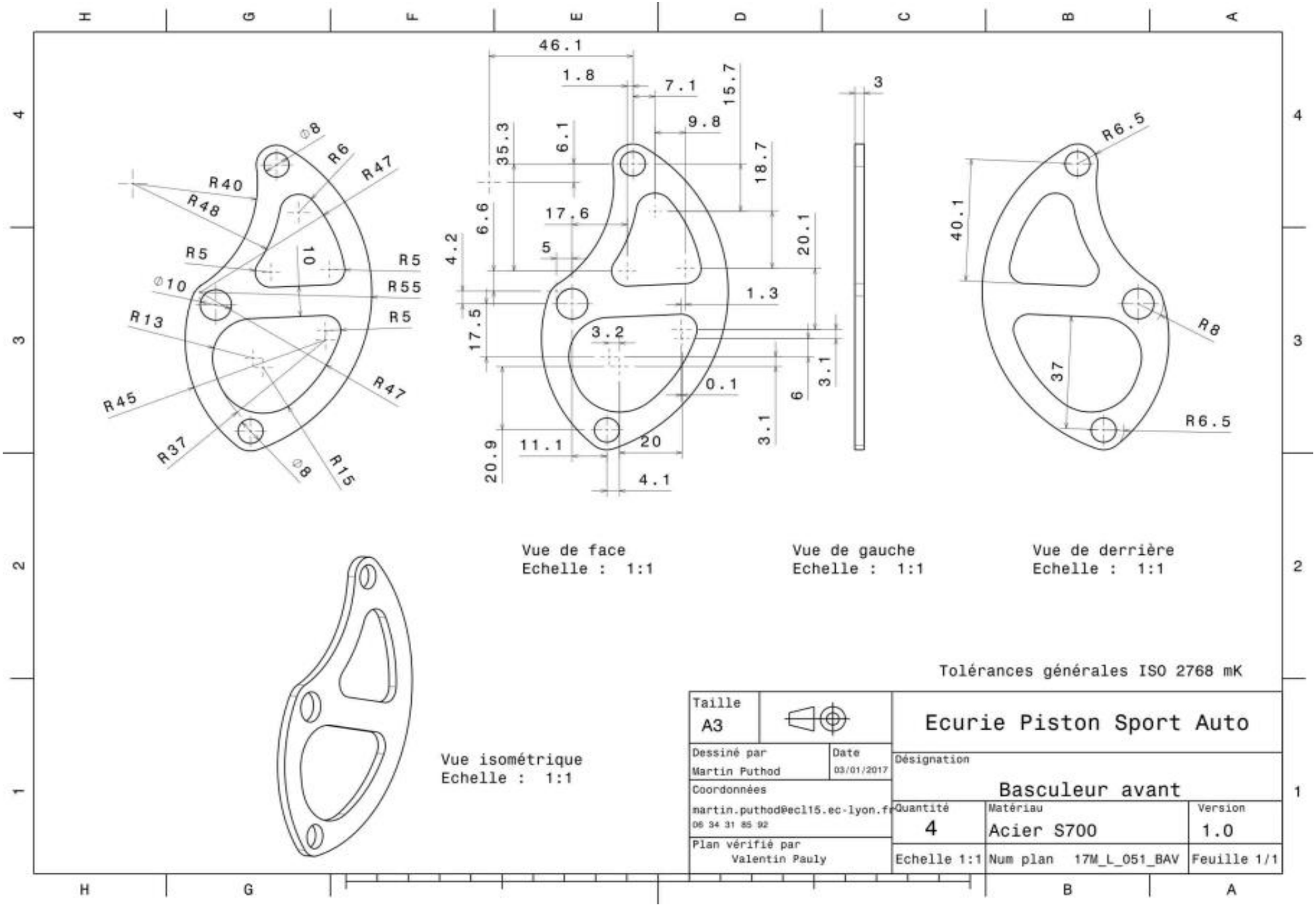
46.1
1.8
7.1
15.7
9.8
35.3
6.1
18.7
6.6
17.6
20.1
4.2
5
1.3
17.5
3.2
0.1
3.1
6
20.9
11.1
20
4.1
3
R40
R48
R6
R47
R5
10
R55
R13
R45
R37
R15
R6.5
40.1
R8
37
Vue de face
Echelle : 1:1
Vue de gauche
Echelle : 1:1
Vue de derrière
Echelle : 1:1
Vue isométrique
Echelle : 1:1
Tolérances générales ISO 2768 mK
Taille
A3
Ecurie Piston Sport Auto
Dessiné par
Martin Puthod
Date
03/01/2017
Désignation
Basculeur avant
Coordonnées
martin.puthod@ecl15.ec-lyon.fr
06 34 31 85 92
Quantité
4
Matériau
Acier S700
Version
1.0
Plan vérifié par
Valentin Pauly
Echelle 1:1
Num plan 17M_L_051_BAV
Feuille 1/1

University	Ecole Centrale de Lyon		Back to BOM	**Car #**	81	**Part Cost**	$ 3.30
System	Suspension System	Drawing :	FileLink1			**Qty**	1
Assembly	Front Suspension		**FileLink2**	**FileLink1**			
Part	Front Rocker mount		**FileLink3**	**FileLink2**		**Extended Cost**	$ 3.30
P/N Base	SU 06002			**FileLink3**			
Suffix	AA						
Details							

ItemOrder	Material	Use	UnitCost	Size1	Unit1	Size2	Unit2	Area Name	Area	Length	Density	Quantity	Sub Total
10	Steel, Mild	Material for mount	$ 2.25	0.194	kg			Rectangular area, 49*26,5 mm	1.30E-03	0.019	7850	1	$ 0.44
												Sub Total	**$ 0.44**

ItemOrder	Process	Use	UnitCost	Unit	Quantity	Multiplier	Mult. Val.	Sub Total
10	Machining Setup, Install and remove	Setup for machining	$ 1.30	unit	1			$ 1.30
20	Machining	Machining removal	$ 0.04	cm^3	10.11	Material-Steel	3	$ 1.21
30	Drilled holes < 25.4 mm dia.	Holes for assembly	$ 0.35	hole	1			$ 0.35
							Sub Total	**$ 2.86**

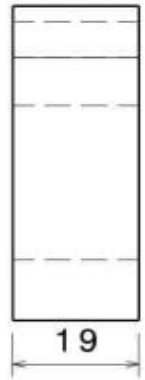

Vue de droite
Echelle : 1:1

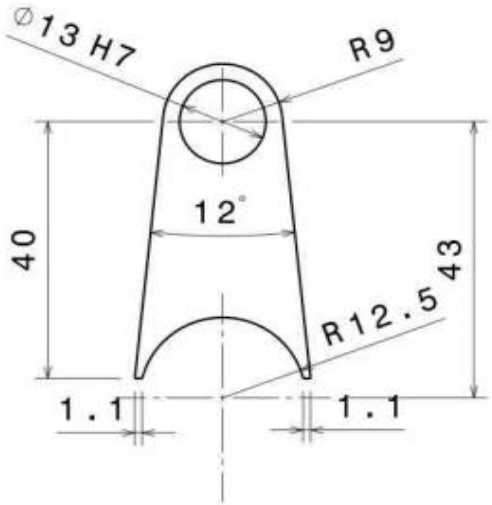

Vue de face
Echelle : 1:1

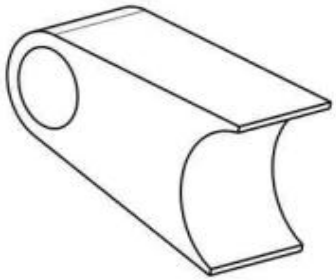

Vue isométrique
Echelle : 1:1

Brut : 27.3*49*19

Tolérances générales ISO 2768 mk

Taille A4		Ecurie Piston Sport Auto
Dessiné par Martin Puthod	Date 08/12/2016	Désignation: Chape basculeur avant
Coordonnées mputhod@ec-lyon.fr 06 34 31 85 92		Quantité 2 / Matériau Acier S235 / Version 1.0
Plan vérifié par Valentin Pauly		Echelle 1:1 / Plan : 17B_L_045_CBAV / Feuille 1/1

University	Ecole Centrale de Lyon		Back to BOM	**Car #**	81	**Part Cost**	$ 1.68
System	Suspension System	**FileLink1**				**Qty**	2
Assembly	Front Suspension	**FileLink2**		**FileLink1**			
Part	Rocker bushing	**FileLink3**		**FileLink2**		**Extended Cost**	$ 3.36
P/N Base	SU 06003			**FileLink3**			
Suffix	AA						
Details							

ItemOrder	Material	Use	UnitCost	Size1	Unit1	Size2	Unit2	Area Name	Area	Length	Density	Quantity	Sub Total
10	Bronze	Stock material for bushings	$ 2.20	0.020	kg			Round area, diameter 16 mm	2.01E-04	0.012	8500	1	$ 0.04
												Sub Total	**$ 0.04**

ItemOrder	Process	Use	UnitCost	Unit	Quantity	Multiplier	Mult. Val.	Sub Total
10	Machining Setup, Install and remove		$ 1.30	unit	1			$ 1.30
20	Machining (turning)	Machining removal	$ 0.04	cm^3	6.34	Material-Bronze	1.33	$ 0.34
							Sub Total	**$ 1.64**

University	Ecole Centrale de Lyon		Back to BOM	**Car #**	81	**Part Cost**	$ 0.25
System	Suspension System	**FileLink1**				**Qty**	2
Assembly	Front Suspension	**FileLink2**		**FileLink1**			
Part	Rocker spacer	**FileLink3**		**FileLink2**		**Extended Cost**	$ 0.49
P/N Base	SU 06004			**FileLink3**			
Suffix	AA						
Details							

ItemOrder	Material	Use	UnitCost	Size1	Unit1	Size2	Unit2	Area Name	Area	Length	Density	Quantity	Sub Total
10	Steel, Mild	Material for spacer	$ 2.25	0.004	kg			Round area, diameter 13 mm	1.33E-04	0.004	7850	1	$ 0.01
												Sub Total	**$ 0.01**

ItemOrder	Process	Use	UnitCost	Unit	Quantity	Multiplier	Mult. Val.	Sub Total
10	Machining Setup, Install and remove		$ 1.30	unit	1	8 parts made from a single machine setup	0.13	$ 0.16
20	Machining	Machining removal	$ 0.04	cm^3	0.63	Material – Steel	3	$ 0.08
							Sub Total	**$ 0.24**

University	Ecole Centrale de Lyon		Back to BOM	**Car #**	81	**Part Cost**	$ 0.28
System	Suspension System	**FileLink1**				**Qty**	2
Assembly	Front Suspension	**FileLink2**		**FileLink1**			
Part	Front A-Arm insert spacer	**FileLink3**		**FileLink2**		**Extended Cost**	$ 0.57
P/N Base	SU 06005			**FileLink3**			
Suffix	AA						
Details							

ItemOrder	Material	Use	UnitCost	Size1	Unit1	Size2	Unit2	Area Name	Area	Length	Density	Quantity	Sub Total
10	Steel, Mild	Material for spacer	$ 2.25	0.004	kg			Round area, diameter 13 mm	1.33E-04	0.004	7850	1	$ 0.01
												Sub Total	**$ 0.01**

ItemOrder	Process	Use	UnitCost	Unit	Quantity	Multiplier	Mult. Val.	Sub Total
10	Machining Setup, Install and remove		$ 1.30	unit	1	8 parts made from a single machine setup	0.13	$ 0.16
20	Machining	Machining removal	$ 0.04	cm^3	0.94	Material – Steel	3	$ 0.11
							Sub Total	**$ 0.28**

University	Ecole Centrale de Lyon		Back to BOM	**Car #**	81	**Part Cost**	$ 0.53
System	Suspension System	**FileLink1**				**Qty**	1
Assembly	Front Suspension	**FileLink2**		**FileLink1**			
Part	Tierod tube	**FileLink3**		**FileLink2**		**Extended Cost**	$ 0.53
P/N Base	SU 06006			**FileLink3**			
Suffix	AA						
Details							

ItemOrder	Material	Use	UnitCost	Size1	Unit1	Size2	Unit2	Area Name	Area	Length	Density	Quantity	Sub Total
10	Steel, Alloy	Material for tierod tube	$ 2.25	0.136	kg			Round 15 mm x 1,5 mm	6.36E-05	0.272	7850	1	$ 0.31
												Sub Total	**$ 0.31**

ItemOrder	Process	Use	UnitCost	Unit	Quantity	Multiplier	Mult. Val.	Sub Total
10	Tube cut	Tierod tube	$ 0.15	cm	1.5			$ 0.23
							Sub Total	**$ 0.23**

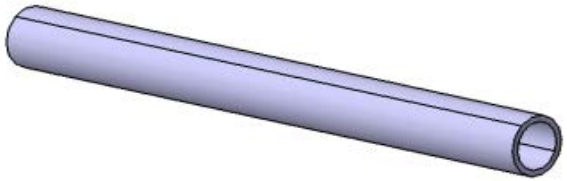

University	Ecole Centrale de Lyon		Back to BOM	**Car #**	81	**Part Cost**	$ 1.68
System	Suspension System	Drawing :	FileLink1			**Qty**	2
Assembly	Front Suspension	**FileLink2**		**FileLink1**			
Part	Tierod insert	**FileLink3**		**FileLink2**		**Extended Cost**	$ 3.35
P/N Base	SU 06007			**FileLink3**			
Suffix	AA						
Details	Tierod left thread insert, left and right are symetrical						

ItemOrder	Material	Use	UnitCost	Size1	Unit1	Size2	Unit2	Area Name	Area	Length	Density	Quantity	Sub Total
10	Steel, Mild	Material for part	$ 2.25	0.039	kg			Round 16 mm diameter	2.01E-04	0.025	7850	1	$ 0.09
												Sub Total	**$ 0.09**

ItemOrder	Process	Use	UnitCost	Unit	Quantity	Multiplier	Mult. Val.	Sub Total
10	Machining, Setup, Install and remove		$ 1.30	unit	1	2 parts made from a single machine setup	0.5	$ 0.65
20	Machining	Main shape contouring	$ 0.04	cm^3	3.02	Material-Steel	3	$ 0.36
30	Machining, Setup, change		$ 0.65	unit	1	2 parts made from a single machine setup	0.5	$ 0.33
40	Threading internal (machining)	Part thread	$ 0.10	cm	2.5		1	$ 0.25
							Sub Total	**$ 1.59**

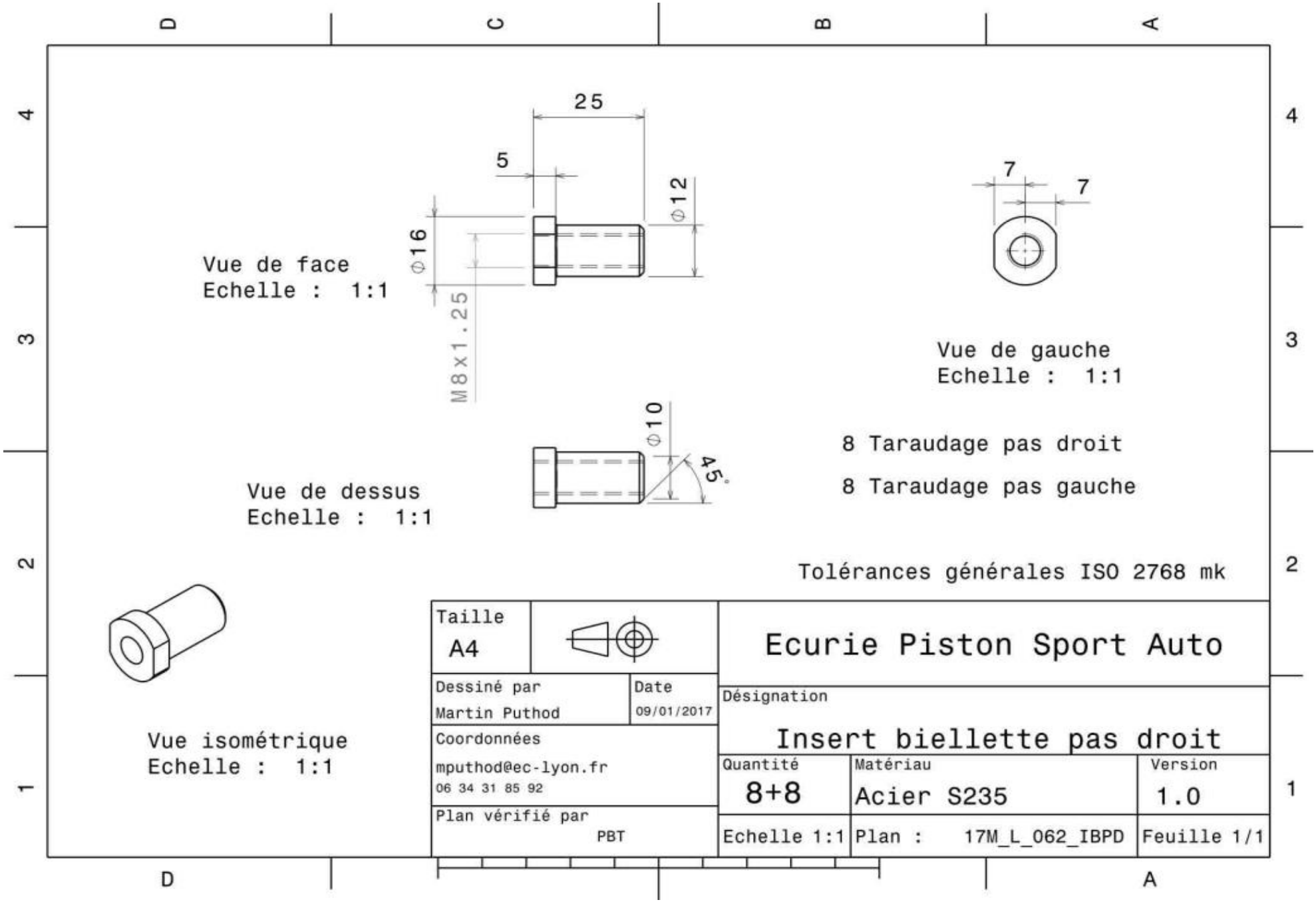
25
5
Φ12
Φ16
M8x1.25
Vue de face
Echelle : 1:1
7
7
Vue de gauche
Echelle : 1:1
Φ10
45°
Vue de dessus
Echelle : 1:1
8 Taraudage pas droit
8 Taraudage pas gauche
Tolérances générales ISO 2768 mk
Vue isométrique
Echelle : 1:1
Taille
A4
Dessiné par
Martin Puthod
Date
09/01/2017
Coordonnées
mputhod@ec-lyon.fr
06 34 31 85 92
Plan vérifié par
PBT
Ecurie Piston Sport Auto
Désignation
Insert biellette pas droit
Quantité
8+8
Matériau
Acier S235
Version
1.0
Echelle 1:1
Plan : 17M_L_062_IBPD
Feuille 1/1

University	Ecole Centrale de Lyon	Back to BOM	**Car #**	81	**Asm Cost** $ 328.47
System	Suspension System				**Qty** 2
Assembly	Rear Suspension		**FileLink1**		
P/N Base	SU A0007		**FileLink2**		**Extended Cost** $ 656.94
Suffix	AA		**FileLink3**		
Details	Rear Suspension, left and right are symetric				

ItemOrder	Part	Part Cost	Quantity	Sub Total
10	Rear Suspension mount	$ 8.87	1	$ 8.87
20	Shock eyelet bushing	$ 1.38	1	$ 1.38
30	End eyelet bushing	$ 1.38	1	$ 1.38
			Sub Total	**$ 11.63**

ItemOrder	Material	Use	UnitCost	Size1	Unit1	Size2	Unit2	Area Name	Area	Length	Density	Quantity	Sub Total
10	Paint	Rear suspension mount red paint	$ 10.00	0.008	m^2							1	$ 0.08
20	Damper, Cane Creek Double Barrel Air (DBAir)	Mono-shock front	$ 310.00		unit							1	$ 310.00
												Sub Total	**$ 310.08**

ItemOrder	Process	Use	UnitCost	Unit	Quantity	Multiplier	Mult. Val.	Sub Total
10	Weld	Welding the suspension mount	$ 0.15	cm	16.5		1	$ 2.48
20	Aerosol apply	Painting the suspension mount	$ 5.25	m^2	0.008		1	$ 0.04
30	Assemble, 1kg, interference	Insert the bushing in the eyelet	$ 0.19	unit	2		1	$ 0.38
40	Assemble, 1kg, Loose	Put the damper in place	$ 0.06	unit	2		1	$ 0.12
50	Hand - Start Only	Bolt damper to suspension mount	$ 0.12	unit	1		1	$ 0.12
60	Hand - Start Only	Bolt damper to rocker	$ 0.12	unit	1		1	$ 0.12
70	Hand - Start Only	Put the nuts into the bolts	$ 0.12	unit	2		1	$ 0.24
80	Ratchet <= 25.4 mm	Thighten the M8 nuts	$ 0.75	unit	2		1	$ 1.50
90	Reaction tool <= 25.4 mm	Thighten the M8 nuts	$ 0.25	unit	2		1	$ 0.50
							Sub Total	**$ 5.50**

ItemOrder	Fastener	Use	UnitCost	Size1	Unit1	Size2	Unit2	Quantity	Sub Total
10	Bolt, grade 12.9	Damper to the suspension mount fixing bolt	$ 0.26	8	mm	40	mm	1	$ 0.26
20	Bolt, grade 12.9	Damper to the rocker fixing bolt	$ 0.26	8	mm	40	mm	1	$ 0.26
30	Nut grade 8.8 (SAE 5)	Nut to tighten the bolts	$ 0.04	8	mm			2	$ 0.08
								Sub Total	**$ 0.60**

ItemOrder	Tooling	Use	UnitCost	Unit	Quantity	PVF	FractionIncluded	Sub Total
10	Welds-Welding fixture	Welding of the mounts	$ 500.00	point	4	3000	1	$ 0.67
							Sub Total	**$ 0.67**

University	Ecole Centrale de Lyon		Back to BOM	**Car #**	81	**Part Cost**	$	8.87
System	Suspension System	Drawing :	FileLink1			**Qty**		1
Assembly	Rear Suspension	**FileLink2**		**FileLink1**				
Part	Rear Suspension mount	**FileLink3**		**FileLink2**		**Extended Cost**	$	8.87
P/N Base	SU 07001			**FileLink3**				
Suffix	AA							
Details								

ItemOrder	Material	Use	UnitCost	Size1	Unit1	Size2	Unit2	Area Name	Area	Length	Density	Quantity	Sub Total
10	Steel, Mild	Material for mount	$ 2.25	0.450	kg			Rectangular 83*30 mm	2.49E-03	0.023	7850	1	$ 1.01
												Sub Total	**$ 1.01**

ItemOrder	Process	Use	UnitCost	Unit	Quantity	Multiplier	Mult. Val.	Sub Total
10	Machining Setup, Install and remove	Setup for machining	$ 1.30	unit	1			$ 1.30
20	Machining	Machining removal	$ 0.04	cm^3	15.7	Material-Steel	3	$ 1.88
30	Machining Setup, change		$ 0.65	unit	1			$ 0.65
40	Machining	Machining removal	$ 0.04	cm^3	14.4	Material-Steel	3	$ 1.73
50	Machining Setup, change		$ 0.65	unit	1			$ 0.65
60	Machining	Tubing cavity	$ 0.04	cm^3	7.87	Material-Steel	3	$ 0.94
80	Drilled holes < 25.4 mm dia.	Holes for assembly	$ 0.35	hole	2			$ 0.70
							Sub Total	**$ 7.86**

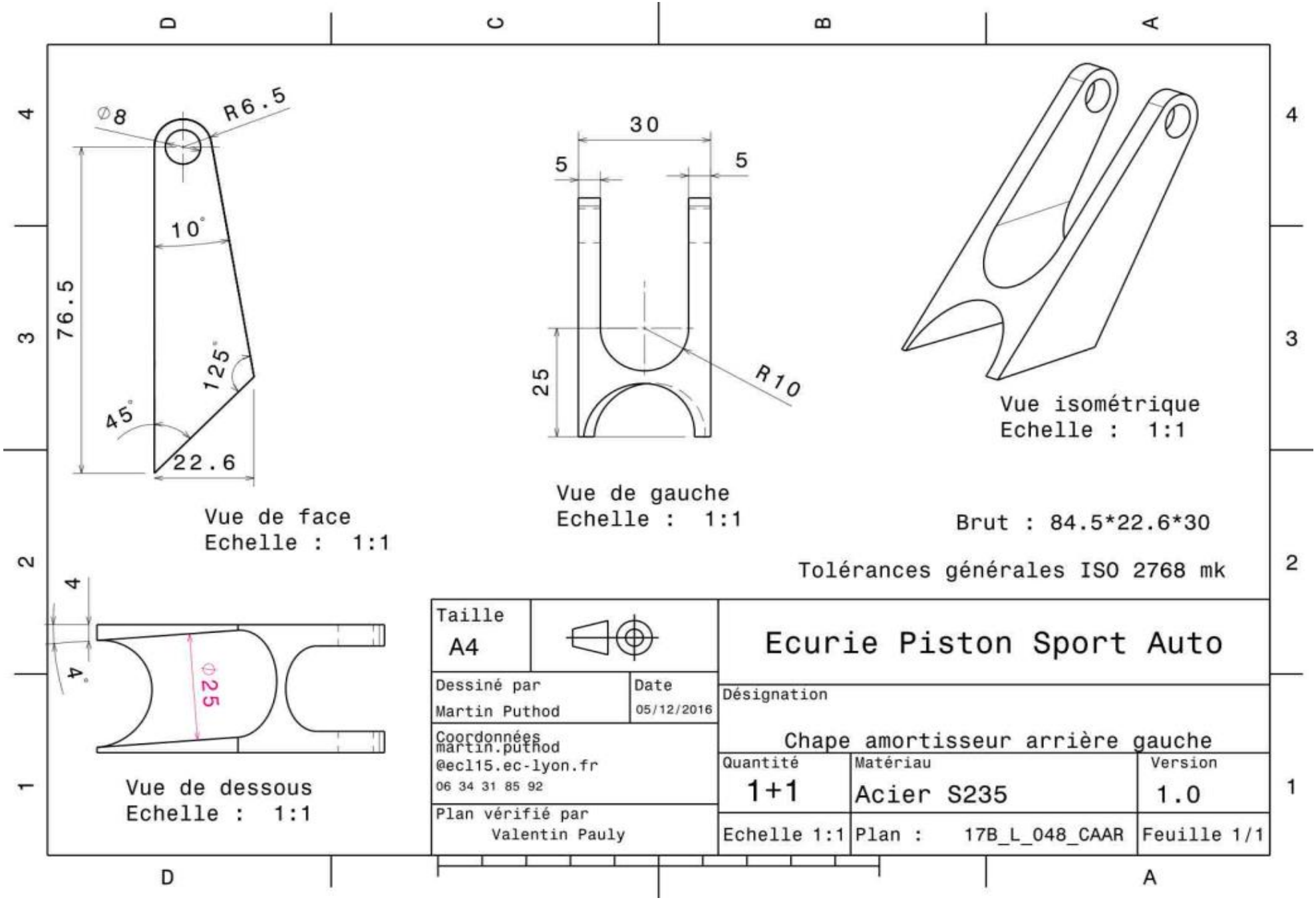
⌀8
R6.5
10°
76.5
125°
45°
22.6
Vue de face
Echelle : 1:1
30
5
5
25
R10
Vue de gauche
Echelle : 1:1
Vue isométrique
Echelle : 1:1
Brut : 84.5*22.6*30
Tolérances générales ISO 2768 mk
4
4°
⌀25
Vue de dessous
Echelle : 1:1
Taille
A4
Dessiné par
Martin Puthod
Date
05/12/2016
Coordonnées
martin.puthod
@ecl15.ec-lyon.fr
06 34 31 85 92
Plan vérifié par
Valentin Pauly
Ecurie Piston Sport Auto
Désignation
Chape amortisseur arrière gauche
Quantité
1+1
Matériau
Acier S235
Version
1.0
Echelle 1:1
Plan : 17B_L_048_CAAR
Feuille 1/1

University	Ecole Centrale de Lyon		Back to BOM	**Car #**	81	**Part Cost**	$ 1.38
System	Suspension System	**FileLink1**				**Qty**	1
Assembly	Rear Suspension	**FileLink2**		**FileLink1**			
Part	Shock eyelet bushing	**FileLink3**		**FileLink2**		**Extended Cost**	$ 1.38
P/N Base	SU 07002			**FileLink3**			
Suffix	AA						
Details	Bushing for the damper						

ItemOrder	Material	Use	UnitCost	Size1	Unit1	Size2	Unit2	Area Name	Area	Length	Density	Quantity	Sub Total
10	Bronze	Stock material for bushing	$ 2.20	0.024	kg			Round area, diameter 12,7 mm	1.27E-04	0.022	8500	1	$ 0.02
												Sub Total	**$ 0.02**

ItemOrder	Process	Use	UnitCost	Unit	Quantity	Multiplier	Mult. Val.	Sub Total
10	Machining Setup, Install and remove	Setup for machining	$ 1.30	unit	1			$ 1.30
20	Machining	Machining removal	$ 0.04	cm^3	1.11	Material-Bronze	1.33	$ 0.06
							Sub Total	**$ 1.36**

University	Ecole Centrale de Lyon		Back to BOM	**Car #**	81	**Part Cost**	$ 1.38
System	Suspension System	**FileLink1**				**Qty**	1
Assembly	Rear Suspension	**FileLink2**		**FileLink1**			
Part	End eyelet bushing	**FileLink3**		**FileLink2**		**Extended Cost**	$ 1.38
P/N Base	SU 07003			**FileLink3**			
Suffix	AA						
Details	Ebushing for the damper						

ItemOrder	Material	Use	UnitCost	Size1	Unit1	Size2	Unit2	Area Name	Area	Length	Density	Quantity	Sub Total
10	Bronze	Stock material for bushing	$ 2.20	0.022	kg			Round area, diameter 12,7 mm	1.27E-04	0.020	8500	1	$ 0.02
												Sub Total	**$ 0.02**

ItemOrder	Process	Use	UnitCost	Unit	Quantity	Multiplier	Mult. Val.	Sub Total
10	Machining Setup, Install and remove	Setup for machining	$ 1.30	unit	1			$ 1.30
20	Machining	Machining removal	$ 0.04	cm^3	1.01	Material-Bronze	1.33	$ 0.05
							Sub Total	**$ 1.35**

University	Ecole Centrale de Lyon	Back to BOM	**Car #**	81	**Asm Cost** $ 36.34
System	Suspension System				**Qty** 2
Assembly	Rear Rocker		**FileLink1**		
P/N Base	SU A0008		**FileLink2**		**Extended Cost** $ 72.69
Suffix	AA		**FileLink3**		
Details	Rear Rocker, left and right are symetric				

ItemOrder	Part	Part Cost	Quantity	Sub Total
10	Sheets of metal of the rocker	$ 1.49	2	$ 2.98
20	Rear Rocker mount	$ 3.94	1	$ 3.94
30	Rocker bushing	$ 1.68	2	$ 3.36
40	Rocker spacer	$ 0.25	2	$ 0.49
50	Rear A-Arm insert spacer	$ 0.28	2	$ 0.57
60	Tierod tube	$ 0.39	1	$ 0.39
70	Tierod insert	$ 1.68	2	$ 3.35
			Sub Total	**$ 15.09**

ItemOrder	Material	Use	UnitCost	Size1	Unit1	Size2	Unit2	Area Name	Area	Length	Density	Quantity	Sub Total
10	Paint	Rocker mount red paint	$ 10.00	0.05	m^2							1	$ 0.50
20	Paint	Tie rod black paint	$ 10.00	0.008	m^2							1	$ 0.08
30	Rod End, Industrial	Right-hand rod end for tie rod extremities	$ 2.50	8	mm			Balls Diameter				1	$ 2.50
40	Rod End, Industrial	Left-hand rod end for tie rod extremities	$ 2.50	8	mm			Balls Diameter				1	$ 2.50
												Sub Total	**$ 5.58**

ItemOrder	Process	Use	UnitCost	Unit	Quantity	Multiplier	Mult. Val.	Sub Total
10	Hand finish - surface preparation	Solvent degreasing on tierod tube	$ 0.02	cm^2	30	Material - steel	3	$ 1.80
20	Hand finish - surface preparation	Solvent degreasing on tierod insert	$ 0.02	cm^2	18	Material - steel	3	$ 1.08
30	Weld	Welding the rocker mount on the chassis	$ 0.15	cm	11		1	$ 1.65
40	Weld	Welding the insert to the tube	$ 0.15	cm	4.7	Repeat 2	2	$ 1.41
50	Aerosol apply	Painting of rocker mount in red	$ 5.25	m^2	0.05		1	$ 0.26
60	Aerosol apply	Painting of the tie rod in black	$ 5.25	m^2	0.008		1	$ 0.04
70	Hand - Start Only	Put a nut on the rod end	$ 0.12	unit	2		1	$ 0.24
80	Hand, Loose <= 25.4 mm	Screwing by hand the rod end in the tie rod insert	$ 0.50	unit	2		1	$ 1.00
90	Ratchet <= 25.4 mm	Thighten the M8 nuts	$ 0.75	unit	2		1	$ 1.50
100	Reaction tool <= 25.4 mm	Thighten the M8 nuts	$ 0.25	unit	2		1	$ 0.50
110	Assemble, 1kg, interference	Insert 2 bronze bushings into the rocker mount	$ 0.19	unit	2		1	$ 0.38
120	Assemble, 1kg, Loose	Put the rocker in place	$ 0.06	unit	2		1	$ 0.12
130	Assemble, 1kg, Loose	Put the washer in place	$ 0.06	unit	1		1	$ 0.06
140	Assemble, 1kg, Loose	Put the spacers of the rocker in place	$ 0.06	unit	2		1	$ 0.12
150	Hand - Start Only	Bolt rocker into rocker mount	$ 0.12	unit	1		1	$ 0.12
160	Hand - Start Only	Bolt tierod into rocker	$ 0.12	unit	1		1	$ 0.12
170	Assemble, 1kg, Loose	Put the spacer of the A-Arm insert in place	$ 0.06	unit	1		1	$ 0.06
180	Hand - Start Only	Bolt tierod into A-Arm insert	$ 0.12	unit	1		1	$ 0.12
190	Hand - Start Only	Put the nuts into the bolts	$ 0.12	unit	3		1	$ 0.36
200	Ratchet <= 25.4 mm	Thighten the M8 nuts	$ 0.75	unit	3		1	$ 2.25
210	Reaction tool <= 25.4 mm	Thighten the M8 nuts	$ 0.25	unit	3		1	$ 0.75
							Sub Total	**$ 13.94**

ItemOrder	Fastener	Use	UnitCost	Size1	Unit1	Size2	Unit2	Quantity	Sub Total
10	Bolt, Grade 12.9	Rocker to rocker mount fixing bolt	$ 0.33	8	mm	50	mm	1	$ 0.33
20	Bolt, Grade 12.9	Tierod to rocker fixing bolt	$ 0.26	8	mm	40	mm	1	$ 0.26
30	Bolt, Grade 12.9	Tierod to Front A-Arm insert fixing bolt	$ 0.26	8	mm	40	mm	1	$ 0.26
40	Nut, Grade 8.8 (SAE 5)	To tighten the bolts	$ 0.04	8	mm			3	$ 0.12
50	Nut, Grade 8.8 (SAE 5)	To tighten the rod ends	$ 0.04	8	mm			2	$ 0.08
60	Washer, Grade 8.8 (SAE 5)		$ 0.01	10	mm			1	$ 0.01
								Sub Total	**$ 1.06**

ItemOrder	Tooling	Use	UnitCost	Unit	Quantity	PVF	FractionIncluded	Sub Total
10	Welds -Welding Fixture	Welding process for rocker mount	$ 500.00	point	4	3000	1	$ 0.67
							Sub Total	**$ 0.67**

University	Ecole Centrale de Lyon		Back to BOM	**Car #**	81	**Part Cost**	$	1.49
System	Suspension System	Drawing :	FileLink1			**Qty**		2
Assembly	Rear Rocker		**FileLink2**	**FileLink1**				
Part	Sheets of metal of the rocker		**FileLink3**	**FileLink2**		**Extended Cost**	$	2.98
P/N Base	SU 08001			**FileLink3**				
Suffix	AA							
Details								

ItemOrder	Material	Use	UnitCost	Size1	Unit1	Size2	Unit2	Area Name	Area	Length	Density	Quantity	Sub Total
10	Steel, Mild	Material for rocker	$ 2.25	0.065	kg			Rectangular sheet 55x50 mm	2.75E-03	0.003	7850	1	$ 0.15
												Sub Total	**$ 0.15**

ItemOrder	Process	Use	UnitCost	Unit	Quantity	Multiplier	Mult. Val.	Sub Total
10	Machining setup, install and remove	Insert and remove parts from laser	$ 1.30	unit	1	4 parts made from a single machine setup	0.25	$ 0.33
20	Laser cut	Cutting the sheets	$ 0.01	cm	33.96	Material - Steel	3	$ 1.02
							Sub Total	**$ 1.34**

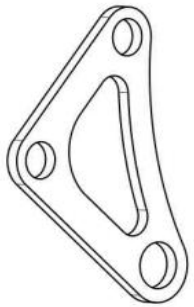

Vue isométrique
Echelle : 1:1

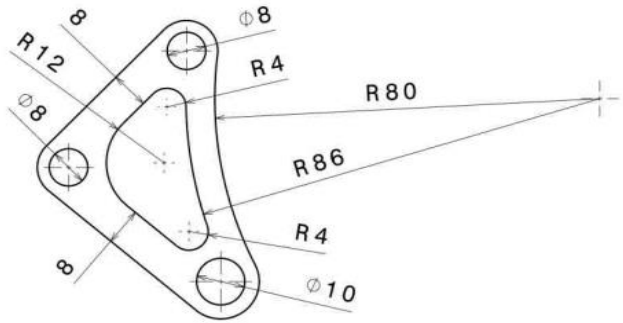

Vue de face
Echelle : 1:1

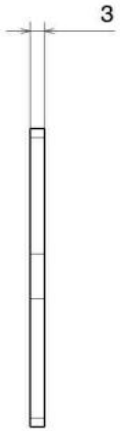

Vue de gauche
Echelle : 1:1

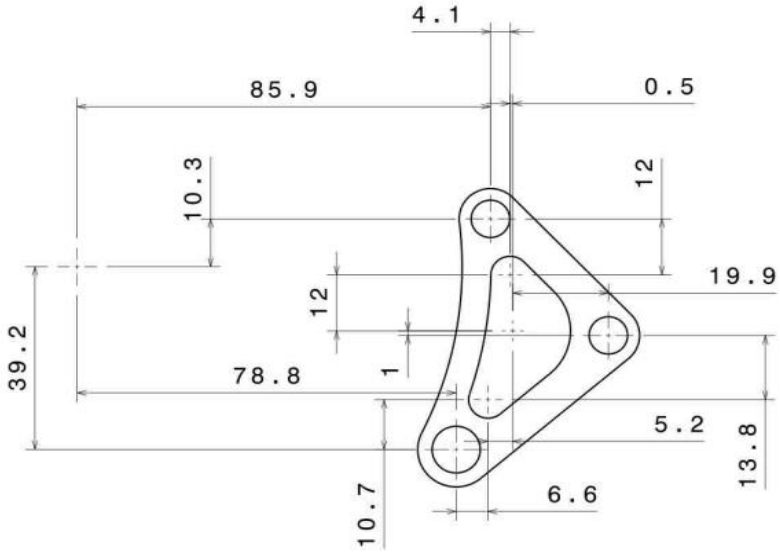

Vue de derrière
Echelle : 1:1

Tolérances générales ISO 2768 mK

Taille A3		Ecurie Piston Sport Auto
Dessiné par Martin Puthod	Date 03/01/2017	Désignation Basculeur arrière
Coordonnées martin.puthod@ecl15.ec-lyon.fr 06 34 31 85 92		Quantité 4 / Matériau Acier S700 / Version 1.0
Plan vérifié par Valentin Pauly		Echelle 1:1 / Num plan 17M_L_052_BAR / Feuille 1/1

University	Ecole Centrale de Lyon		Back to BOM	**Car #**	81	**Part Cost**	$ 3.94
System	Suspension System	Drawing :	FileLink1			**Qty**	1
Assembly	Rear Rocker	**FileLink2**		**FileLink1**			
Part	Rear Rocker mount	**FileLink3**		**FileLink2**		**Extended Cost**	$ 3.94
P/N Base	SU 08002			**FileLink3**			
Suffix	AA						
Details							

ItemOrder	Material	Use	UnitCost	Size1	Unit1	Size2	Unit2	Area Name	Area	Length	Density	Quantity	Sub Total
10	Steel, Mild	Material for mount	$ 2.25	0.194				Rectangular area 49*26,5 mm	1.30E-03	0.019	7850	1	$ 0.44
												Sub Total	**$ 0.44**

ItemOrder	Process	Use	UnitCost	Unit	Quantity	Multiplier	Mult. Val.	Sub Total
10	Machining Setup, Install and remove	Setup for machining	$ 1.30	unit	1			$ 1.30
20	Machining	Machining removal	$ 0.04	cm^3	8.70	Material-Steel	3	$ 1.04
30	Machining Setup, change		$ 0.65	unit	1			$ 0.65
40	Machining	Tubing cavity	$ 0.04	cm^3	4.29	Material-Steel	3	$ 0.52
60	Drilled holes < 25.4 mm dia.	Holes for assembly	$ 0.35	hole	1			$ 0.35
							Sub Total	**$ 3.51**

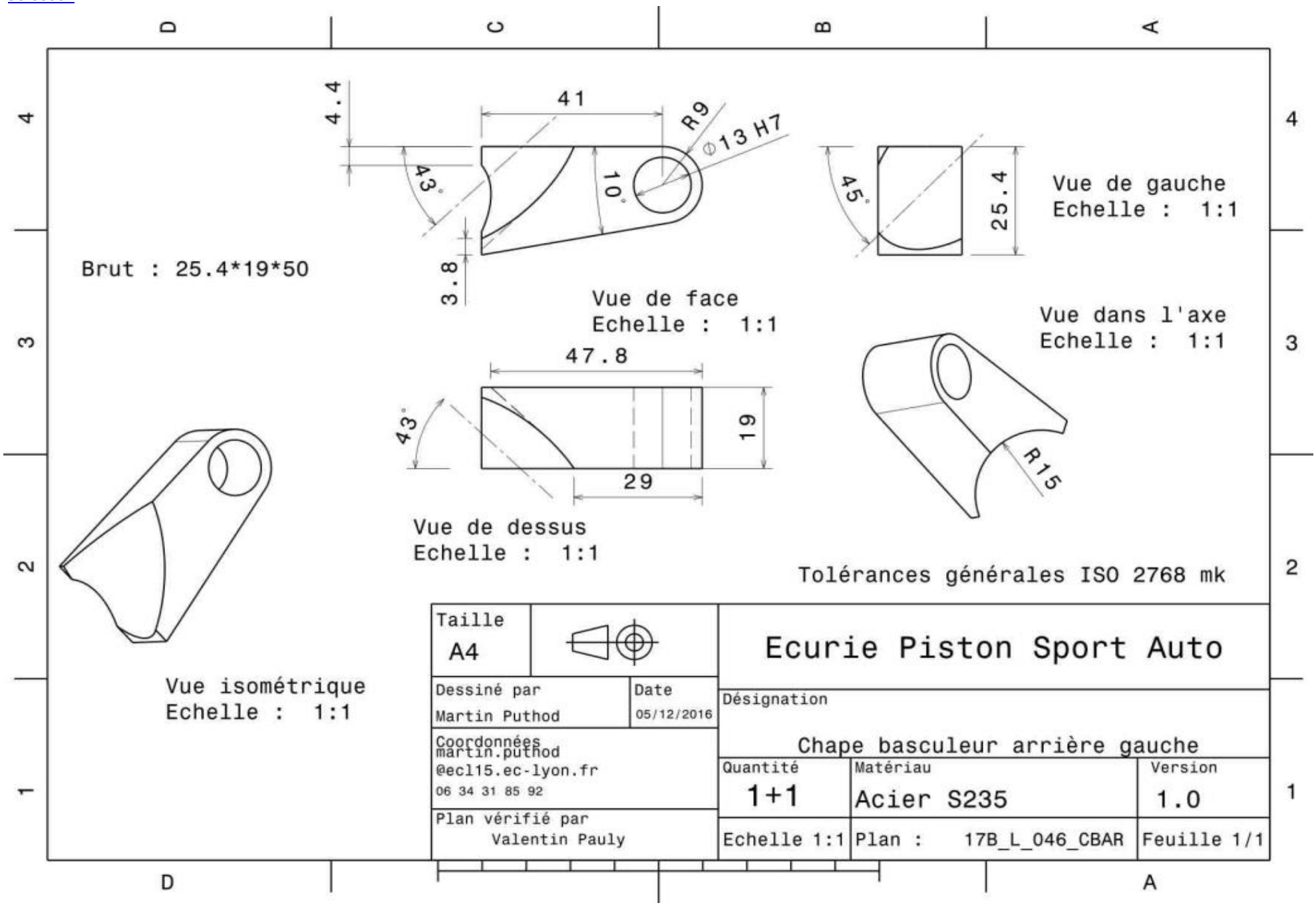
41
4.4
R9
⌀13 H7
43°
10°
3.8
Vue de face
Echelle : 1:1
45°
25.4
Vue de gauche
Echelle : 1:1
Brut : 25.4*19*50
47.8
43°
19
29
Vue de dessus
Echelle : 1:1
Vue dans l'axe
Echelle : 1:1
R15
Tolérances générales ISO 2768 mk
Vue isométrique
Echelle : 1:1
Taille
A4
Ecurie Piston Sport Auto
Dessiné par
Martin Puthod
Date
05/12/2016
Désignation
Chape basculeur arrière gauche
Coordonnées
martin.puthod
@ecl15.ec-lyon.fr
06 34 31 85 92
Quantité
1+1
Matériau
Acier S235
Version
1.0
Plan vérifié par
Valentin Pauly
Echelle 1:1
Plan : 17B_L_046_CBAR
Feuille 1/1

University	Ecole Centrale de Lyon		Back to BOM	**Car #**	81	**Part Cost**	$ 1.68
System	Suspension System	**FileLink1**				**Qty**	2
Assembly	Rear Rocker	**FileLink2**		**FileLink1**			
Part	Rocker bushing	**FileLink3**		**FileLink2**		**Extended Cost**	$ 3.36
P/N Base	SU 08003			**FileLink3**			
Suffix	AA						
Details							

ItemOrder	Material	Use	UnitCost	Size1	Unit1	Size2	Unit2	Area Name	Area	Length	Density	Quantity	Sub Total
10	Bronze	Stock material for bushings	$ 2.20	0.020	kg			Round area, diameter 16 mm	2.01E-04	0.012	8500	1	$ 0.04
												Sub Total	**$ 0.04**

ItemOrder	Process	Use	UnitCost	Unit	Quantity	Multiplier	Mult. Val.	Sub Total
10	Machining Setup, Install and remove		$ 1.30	unit	1			$ 1.30
20	Machining (turning)	Machining removal	$ 0.04	cm^3	6.34	Material-Bronze	1.33	$ 0.34
							Sub Total	**$ 1.64**

University	Ecole Centrale de Lyon		Back to BOM	**Car #**	81	**Part Cost**	$ 0.25
System	Suspension System	**FileLink1**				**Qty**	2
Assembly	Rear Rocker	**FileLink2**		**FileLink1**			
Part	Rocker spacer	**FileLink3**		**FileLink2**		**Extended Cost**	$ 0.49
P/N Base	SU 08004			**FileLink3**			
Suffix	AA						
Details							

ItemOrder	Material	Use	UnitCost	Size1	Unit1	Size2	Unit2	Area Name	Area	Length	Density	Quantity	Sub Total
10	Steel, Mild	Material for spacer	$ 2.25	0.004	kg			Round area, diameter 13 mm	1.33E-04	0.004	7850	1	$ 0.01
												Sub Total	**$ 0.01**

ItemOrder	Process	Use	UnitCost	Unit	Quantity	Multiplier	Mult. Val.	Sub Total
10	Machining Setup, Install and remove		$ 1.30	unit	1	8 parts made from a single machine setup	0.13	$ 0.16
20	Machining	Machining removal	$ 0.04	cm^3	0.63	Material – Steel	3	$ 0.08
							Sub Total	**$ 0.24**

University	Ecole Centrale de Lyon		Back to BOM	**Car #**	81	**Part Cost**	$ 0.28
System	Suspension System	**FileLink1**				**Qty**	2
Assembly	Rear Rocker	**FileLink2**		**FileLink1**			
Part	Rear A-Arm insert spacer	**FileLink3**		**FileLink2**		**Extended Cost**	$ 0.57
P/N Base	SU 08005			**FileLink3**			
Suffix	AA						
Details							

ItemOrder	Material	Use	UnitCost	Size1	Unit1	Size2	Unit2	Area Name	Area	Length	Density	Quantity	Sub Total
10	Steel, Mild	Material for spacer	$ 2.25	0.004	kg			Round area, diameter 13 mm	1.33E-04	0.004	7850	1	$ 0.01
												Sub Total	**$ 0.01**

ItemOrder	Process	Use	UnitCost	Unit	Quantity	Multiplier	Mult. Val.	Sub Total
10	Machining Setup, Install and remove		$ 1.30	unit	1	8 parts made from a single machine setup	0.13	$ 0.16
20	Machining	Machining removal	$ 0.04	cm^3	0.94	Material – Steel	3	$ 0.11
							Sub Total	**$ 0.28**

University	Ecole Centrale de Lyon		Back to BOM	**Car #**	81	**Part Cost**	$ 0.39
System	Suspension System	**FileLink1**				**Qty**	1
Assembly	Rear Rocker	**FileLink2**		**FileLink1**			
Part	Tierod tube	**FileLink3**		**FileLink2**		**Extended Cost**	$ 0.39
P/N Base	SU 08006			**FileLink3**			
Suffix	AA						
Details							

ItemOrder	Material	Use	UnitCost	Size1	Unit1	Size2	Unit2	Area Name	Area	Length	Density	Quantity	Sub Total
10	Steel, Alloy	Material for tierod tube	$ 2.25	0.075	kg			Round area 15 mm x 1,5 mm	6.36E-05	0.150	7850	1	$ 0.17
												Sub Total	**$ 0.17**

ItemOrder	Process	Use	UnitCost	Unit	Quantity	Multiplier	Mult. Val.	Sub Total
10	Tube cut	Tierod tube	$ 0.15	cm	1.5			$ 0.23
							Sub Total	**$ 0.23**

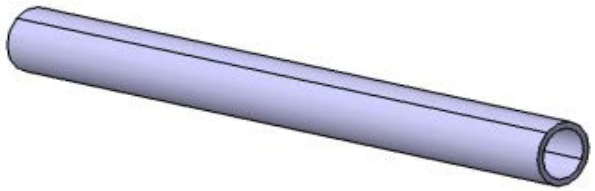

University	Ecole Centrale de Lyon		Back to BOM	**Car #**	81	**Part Cost**	$ 1.68
System	Suspension System	Drawing :	FileLink1			**Qty**	2
Assembly	Rear Rocker	**FileLink2**		**FileLink1**			
Part	Tierod insert	**FileLink3**		**FileLink2**		**Extended Cost**	$ 3.35
P/N Base	SU 08007			**FileLink3**			
Suffix	AA						
Details	Tierod left thread insert, left and right are symetrical						

ItemOrder	Material	Use	UnitCost	Size1	Unit1	Size2	Unit2	Area Name	Area	Length	Density	Quantity	Sub Total
10	Steel, Mild	Material for part	$ 2.25	0.039	kg			Round 16 mm diameter	2.01E-04	0.025	7850	1	$ 0.09
												Sub Total	**$ 0.09**

ItemOrder	Process	Use	UnitCost	Unit	Quantity	Multiplier	Mult. Val.	Sub Total
10	Machining, Setup, Install and remove		$ 1.30	unit	1	2 parts made from a single machine setup	0.5	$ 0.65
20	Machining	Main shape contouring	$ 0.04	cm^3	3.02	Material-Steel	3	$ 0.36
30	Machining, Change		$ 0.65	unit	1	2 parts made from a single machine setup	0.5	$ 0.33
40	Threading internal (machining)	Part thread	$ 0.10	cm	2.5		1	$ 0.25
							Sub Total	**$ 1.59**

University	Ecole Centrale de Lyon	Back to BOM	**Car #**	81	**Asm Cost** $ 22.20
System	Suspension System				**Qty** 2
Assembly	Rear Tie-Rod		**FileLink1**		
P/N Base	SU A0009		**FileLink2**		**Extended Cost** $ 44.40
Suffix	AA		**FileLink3**		
Details	Rear Tie-Rod, left and right are identical				

ItemOrder	Part	Part Cost	Quantity	Sub Total
10	Tie Rod insert	$ 1.68	2	$ 3.35
20	Tube	$ 0.46	1	$ 0.46
			Sub Total	**$ 3.81**

ItemOrder	Material	Use	UnitCost	Size1	Unit1	Size2	Unit2	Area Name	Area	Length	Density	Quantity	Sub Total
20	Paint	Tie rod black paint	$ 10.00	0.023	m^2							1	$ 0.23
30	Rod End, Industrial	Right-hand rod end for tie rod extremities	$ 2.50	8	mm			Balls Diameter				1	$ 2.50
40	Rod End, Industrial	Left-hand rod end for tie rod extremities	$ 2.50	8	mm			Balls Diameter				1	$ 2.50
												Sub Total	**$ 5.23**

ItemOrder	Process	Use	UnitCost	Unit	Quantity	Multiplier	Mult. Val.	Sub Total
10	Hand finish - surface preparation	Solvent degreasing on tierod tube	$ 0.02	cm^2	30	Material - steel	3	$ 1.80
20	Hand finish - surface preparation	Solvent degreasing on tierod insert	$ 0.02	cm^2	18	Material - steel	3	$ 1.08
30	Weld	Welding the insert to the tube	$ 0.15	cm	4.7	Repeat 2	2	$ 1.41
40	Aerosol apply	Painting of the tie rod in black	$ 5.25	m^2	0.023		1	$ 0.12
50	Hand - Start Only	Put a nut on the rod end	$ 0.12	unit	2		1	$ 0.24
60	Hand, Loose <= 25.4 mm	Screwing by hand the rod end in the tie rod insert	$ 0.50	unit	2		1	$ 1.00
70	Wrench <= 25.4 mm	Thighten the M8 nuts	$ 1.50	unit	2		1	$ 3.00
80	Reaction tool <= 25.4 mm	Thighten the M8 nuts	$ 0.25	unit	2		1	$ 0.50
90	Assemble, 1kg, Loose	Put the spacers of the mount in place	$ 0.06	unit	2		1	$ 0.12
100	Hand - Start Only	Bolt tierod into the mount	$ 0.12	unit	1		1	$ 0.12
110	Assemble, 1kg, Loose	Put the spacers of the upright lower insert in place	$ 0.06	unit	1		1	$ 0.06
120	Hand - Start Only	Bolt tierod into the upright lower insert	$ 0.12	unit	1		1	$ 0.12
130	Hand - Start Only	Put the nuts into the bolts	$ 0.12	unit	2		1	$ 0.24
140	Ratchet <= 25.4 mm	Thighten the M8 nuts	$ 0.75	unit	2		1	$ 1.50
150	Reaction tool <= 25.4 mm	Thighten the M8 nuts	$ 0.25	unit	2		1	$ 0.50
							Sub Total	**$ 11.81**

ItemOrder	Fastener	Use	UnitCost	Size1	Unit1	Size2	Unit2	Quantity	Sub Total
10	Bolt, Grade 12.9	Tierod to mount fixing bolt	$ 0.26	8	mm	40	mm	1	$ 0.26
20	Bolt, Grade 12.9	Tierod to Upright lower insert fixing bolt	$ 0.26	8	mm	40	mm	1	$ 0.26
30	Nut, Grade 8.8 (SAE 5)	To tighten the bolts	$ 0.04	8	mm			2	$ 0.08
40	Nut, Grade 8.8 (SAE 5)	To tighten the rod ends	$ 0.04	8	mm			2	$ 0.08
								Sub Total	**$ 0.68**

ItemOrder	Tooling	Use	UnitCost	Unit	Quantity	PVF	FractionIncluded	Sub Total
10	Welds - Welding Fixture	Welding the insert to the tube	$ 500.00	point	4	3000	1	$ 0.67
							Sub Total	**$ 0.67**

University	Ecole Centrale de Lyon		Back to BOM	**Car #**	11	**Part Cost**	$ 1.68
System	Suspension System	**FileLink1**				**Qty**	2
Assembly	Rear Tie-Rod	**FileLink2**		**FileLink1**			
Part	Tie Rod insert	**FileLink3**		**FileLink2**		**Extended Cost**	$ 3.35
P/N Base	SU 09001			**FileLink3**			
Suffix	AA						
Details							

ItemOrder	Material	Use	UnitCost	Size1	Unit1	Size2	Unit2	Area Name	Area	Length	Density	Quantity	Sub Total
10	Steel, Mild	Material for part	$ 2.25	0.039	kg			Round 16 mm diameter	2.01E-04	0.025	7850	1	$ 0.09
												Sub Total	**$ 0.09**

ItemOrder	Process	Use	UnitCost	Unit	Quantity	Multiplier	Mult. Val.	Sub Total
10	Machining, Setup, Install and remove		$ 1.30	unit	1	2 parts made from a single machine setup	0.5	$ 0.65
20	Machining	Main shape contouring	$ 0.04	cm^3	3.02	Material-Steel	3	$ 0.36
30	Machining, Setup, Change		$ 0.65	unit	1	2 parts made from a single machine setup	0.5	$ 0.33
40	Threading internal (machining)	Part thread	$ 0.10	cm	2.5		1	$ 0.25
							Sub Total	**$ 1.59**

University	Ecole Centrale de Lyon		Back to BOM	**Car #**	11	**Part Cost**	$ 0.46
System	Suspension System	**FileLink1**				**Qty**	1
Assembly	Rear Tie-Rod	**FileLink2**		**FileLink1**			
Part	Tube	**FileLink3**		**FileLink2**		**Extended Cost**	$ 0.46
P/N Base	SU 09002			**FileLink3**			
Suffix	AA						
Details							

ItemOrder	Material	Use	UnitCost	Size1	Unit1	Size2	Unit2	Area Name	Area	Length	Density	Quantity	Sub Total
10	Steel, Alloy	Material for tube	$ 2.25	0.105	kg			Round area 15 mm x 1,5 mm	6.36E-05	0.210	7850	1	$ 0.24
												Sub Total	**$ 0.24**

ItemOrder	Process	Use	UnitCost	Unit	Quantity	Multiplier	Mult. Val.	Sub Total
10	Tube cut	Tierod tube	$ 0.15	cm	1.5			$ 0.23
							Sub Total	**$ 0.23**

University	Ecole Centrale de Lyon
System	Suspension System
Assembly	Front Upright Assembly
P/N Base	SU A0010
Suffix	AA
Details	Multi-parts upright assembly, which are then screwed together

Back to BOM

Car #	81
FileLink1	
FileLink2	
FileLink3	

Asm Cost	$ 83.99
Qty	2
Extended Cost	$ 167.98

ItemOrder	Part	Part Cost	Quantity	Sub Total
10	Front upright	$ 34.40	1	$ 34.40
20	Steering tab	$ 3.67	1	$ 3.67
30	Caliper tab	$ 7.10	1	$ 7.10
40	Upper A-arm tab	$ 6.90	1	$ 6.90
50	Lower A-arm tab	$ 8.85	1	$ 8.85
60	Camber adjustment shim	$ 0.91	1	$ 0.91
70	Speed sensor front mount	$ 1.01	1	$ 1.01
			Sub Total	**$ 62.84**

ItemOrder	Process	Use	UnitCost	Unit	Quantity	Multiplier	Mult. Val.	Sub Total
10	Assemble, 3kg, Interference	Assemble upright with front hub	$ 0.56	Unit	1		1	$ 0.56
20	Assemble, 1kg, Line-on-Line	Assemble lower A-arm tab with upright	$ 0.13	Unit	1		1	$ 0.13
20	Assemble, 1kg, Line-on-Line	Assemble speed sensor mount with upright	$ 0.13	Unit	1		1	$ 0.13
30	Ratchet <= 25.4 mm	Bolt lower tab and sensor and upright	$ 0.75	Unit	2		1	$ 1.50
40	Reaction Tool <= 25.4 mm	Bolt lower tab and sensor and upright	$ 0.25	Unit	2		1	$ 0.50
50	Assemble, 1kg, Line-on-Line	Assemble camber shim with upright	$ 0.13	Unit	1		1	$ 0.13
60	Assemble, 1kg, Line-on-Line	Assemble upper tab with upright	$ 0.13	Unit	1		1	$ 0.13
70	Assemble, 1kg, Line-on-Line	Assemble the upper section of caliper tab with upright	$ 0.13	Unit	1		1	$ 0.13
80	Ratchet <= 25.4 mm	Bolt upper tab, camber shim and caliper tab with upright	$ 0.75	Unit	2		1	$ 1.50
90	Reaction Tool <= 25.4 mm	Bolt upper tab, camber shim and caliper tab with upright	$ 0.25	Unit	2		1	$ 0.50
100	Assemble, 1kg, Line-on-Line	Assemble steering tab with upright	$ 0.13	Unit	1		1	$ 0.13
110	Assemble, 1kg, Line-on-Line	Assemble the lower section of caliper tab with upright	$ 0.13	Unit	1		1	$ 0.13
120	Ratchet <= 25.4 mm	Bolt steering tab and caliper tab with upright	$ 0.75	Unit	1		1	$ 0.75
130	Reaction Tool <= 25.4 mm	Bolt steering tab and caliper tab with upright	$ 0.25	Unit	1		1	$ 0.25
140	Ratchet <= 25.4 mm	Bolt steering tab with upright	$ 0.75	Unit	1		1	$ 0.75
150	Reaction Tool <= 25.4 mm	Bolt steering tab with upright	$ 0.25	Unit	1		1	$ 0.25
160	Assemble, 5kg, Line-on-Line	Assemble upright assembly with frame	$ 0.63	Unit	1		1	$ 0.63
170	Ratchet <= 25.4 mm	Bolt upright assembly with front A-arms	$ 0.75	Unit	2		1	$ 1.50
180	Reaction Tool <= 25.4 mm	Bolt upright assembly with front A-arms	$ 0.25	Unit	2		1	$ 0.50
190	Suspension Setup-Independent Susp. (per corner)	Camber and toe adjustment	$ 8.75	Unit	1		1	$ 8.75
							Sub Total	**$ 18.85**

ItemOrder	Fastener	Use	UnitCost	Size1	Unit1	Size2	Unit2	Quantity	Sub Total
10	Bolt, Grade 8.8 (SAE 5)	Bolt lower tab and upright	$0.26	8	mm	60	mm	2	$ 0.53
20	Nut, Grade 8.8 (SAE 5)	Bolt lower tab and upright	$0.04	8	mm			2	$ 0.09
30	Washer, Grade 8.8 (SAE 5)	Bolt lower tab and upright	$0.01		mm			4	$ 0.04
40	Bolt, Grade 8.8 (SAE 5)	Bolt upper tab, camber shim and caliper tab with upright	$0.01	8	mm	70	mm	2	$ 0.02
50	Nut, Grade 8.8 (SAE 5)	Bolt upper tab, camber shim and caliper tab with upright	$0.04	8	mm			2	$ 0.09
60	Washer, Grade 8.8 (SAE 5)	Bolt upper tab, camber shim and caliper tab with upright	$0.01		mm			4	$ 0.04
70	Bolt, Grade 8.8 (SAE 5)	Bolt steering tab (and caliper tab) with upright	$0.39	8	mm	80	mm	2	$ 0.77
80	Nut, Grade 8.8 (SAE 5)	Bolt steering tab (and caliper tab) with upright	$0.04	8	mm			2	$ 0.09
90	Washer, Grade 8.8 (SAE 5)	Bolt steering tab (and caliper tab) with upright	$0.01		mm			2	$ 0.02
100	Bolt, Grade 8.8 (SAE 5)	Bolt upright assembly with front upper A-arms	$0.26	8	mm	60	mm	1	$ 0.26
110	Nut, Grade 8.8 (SAE 5)	Bolt upright assembly with front upper A-arms	$0.04	8	mm			1	$ 0.04
120	Washer, Grade 8.8 (SAE 5)	Bolt upright assembly with front upper A-arms	$0.01		mm			2	$ 0.02
130	Bolt, Grade 8.8 (SAE 5)	Bolt upright assembly with front lower A-arms	$0.21	8	mm	50	mm	1	$ 0.21
140	Nut, Grade 8.8 (SAE 5)	Bolt upright assembly with front lower A-arms	$0.04	8	mm			1	$ 0.04
150	Washer, Grade 8.8 (SAE 5)	Bolt upright assembly with front lower A-arms	$0.01		mm			2	$ 0.02
								Sub Total	**$ 2.30**

University	Ecole Centrale de Lyon		Back to BOM	**Car #**	81	**Part Cost**	$ 34.40
System	Suspension System	Drawing :	FileLink1			**Qty**	1
Assembly	Front Upright Assembly	**FileLink2**		**FileLink1**			
Part	Front upright	**FileLink3**		**FileLink2**		**Extended Cost**	$ 34.40
P/N Base	SU 10001			**FileLink3**			
Suffix	AA						
Details	Main part of the assembly						

ItemOrder	Material	Use	UnitCost	Size1	Unit1	Size2	Unit2	Area Name	Area	Length	Density	Quantity	Sub Total
10	Aluminum, Premium		$ 4.20	2.034	kg			Rectangular area, 250x100 mm	2.50E-02	0.03	2712	1	$ 8.54
												Sub Total	**$ 8.54**

ItemOrder	Process	Use	UnitCost	Unit	Quantity	Multiplier	Mult. Val.	Sub Total
10	Machining Setup, Install and remove		$ 1.30	Unit	1		1	$ 1.30
20	Machining	Outer profile, first bearing	$ 0.04	cm^3	514.7	Aluminium	1	$ 20.59
30	Machining Setup, Change		$ 0.65	Unit	1		1	$ 0.65
40	Machining	Second bearing	$ 0.04	cm^3	65.34	Aluminium	1	$ 2.61
50	Machining Setup, Change		$ 0.65	Unit	1		1	$ 0.65
60	Machining	Last holes	$ 0.04	cm^3	1.44	Aluminium	1	$ 0.06
							Sub Total	**$ 25.86**

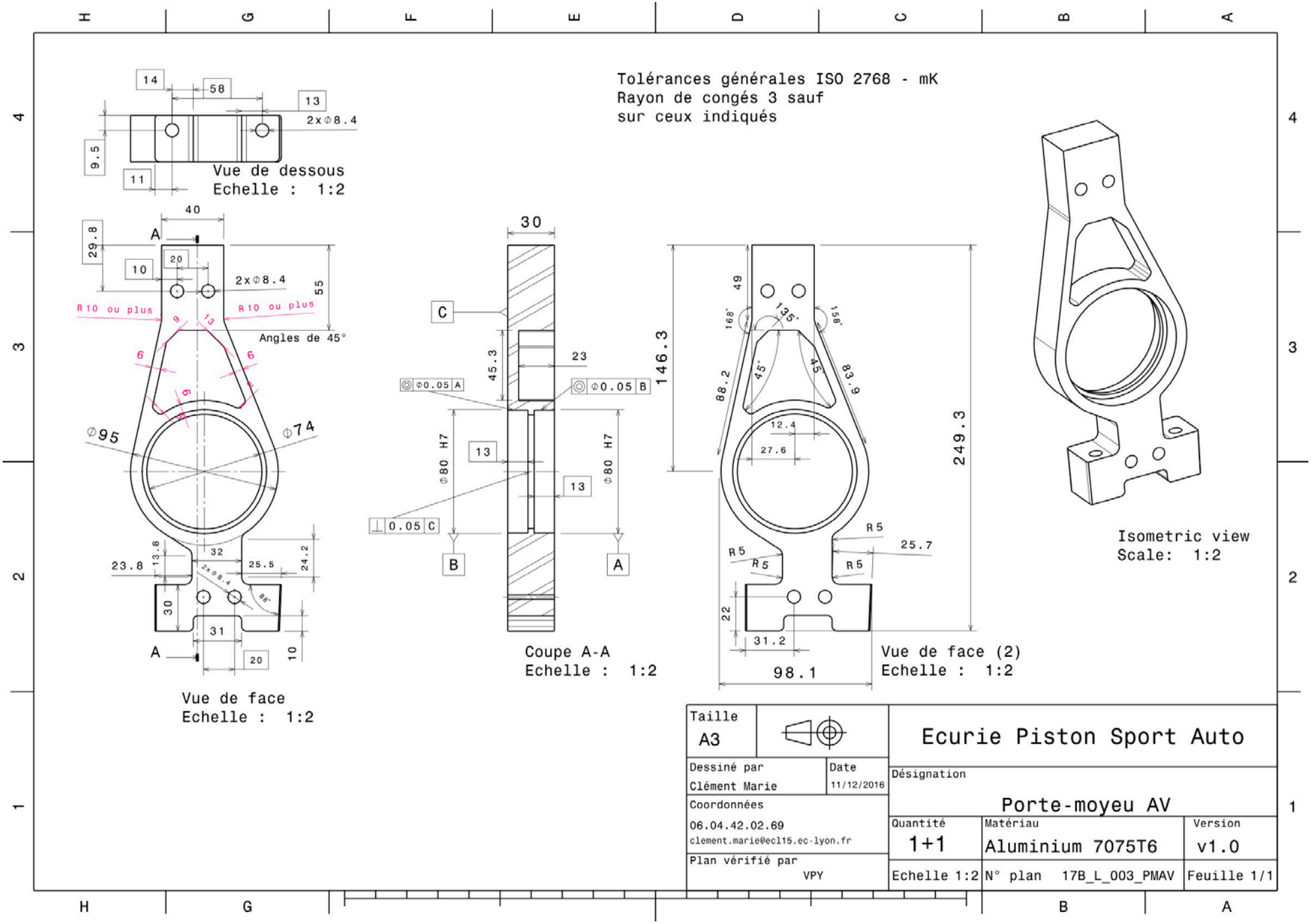
Tolérances générales ISO 2768 - mK
Rayon de congés 3 sauf
sur ceux indiqués
Vue de dessous
Echelle : 1:2
Vue de face
Echelle : 1:2
Coupe A-A
Echelle : 1:2
Vue de face (2)
Echelle : 1:2
Isometric view
Scale: 1:2
R10 ou plus
Angles de 45°
2xΦ8.4
Φ95
Φ74
Φ80 H7
Φ0.05 A
Φ0.05 B
0.05 C
146.3
249.3
98.1
Taille
A3
Dessiné par
Clément Marie
Date
11/12/2016
Coordonnées
06.04.42.02.69
clement.marie@ecl15.ec-lyon.fr
Plan vérifié par
VPY
Ecurie Piston Sport Auto
Désignation
Porte-moyeu AV
Quantité
1+1
Matériau
Aluminium 7075T6
Version
v1.0
Echelle 1:2
N° plan 17B_L_003_PMAV
Feuille 1/1

University	Ecole Centrale de Lyon		Back to BOM	**Car #**	81	**Part Cost**	$ 3.67
System	Suspension System	Drawing :	FileLink1			**Qty**	1
Assembly	Front Upright Assembly		**FileLink2**	**FileLink1**			
Part	Steering tab		**FileLink3**	**FileLink2**		**Extended Cost**	$ 3.67
P/N Base	SU 10002			**FileLink3**			
Suffix	AA						
Details	To hold the steering tube						

ItemOrder	Material	Use	UnitCost	Size1	Unit1	Size2	Unit2	Area Name	Area	Length	Density	Quantity	Sub Total
10	Aluminum, Normal		$ 4.20	0.178	kg			Rectangular area, 85x35 mm	2.98E-03	0.022	2712	1	$ 0.75
												Sub Total	**$ 0.75**

ItemOrder	Process	Use	UnitCost	Unit	Quantity	Multiplier	Mult. Val.	Sub Total
10	Machining Setup, Install and remove		$ 1.30	Unit	1			$ 1.30
20	Machining	Outer profile, lateral sides and drillings	$ 0.04	cm^3	24.09	Aluminium	1	$ 0.96
30	Machining, Change		$ 0.65	Unit	1			$ 0.65
40	Machining	Last drillings	$ 0.04	cm^3	0.332	Aluminium	1	$ 0.01
							Sub Total	**$ 2.93**

SU 10002

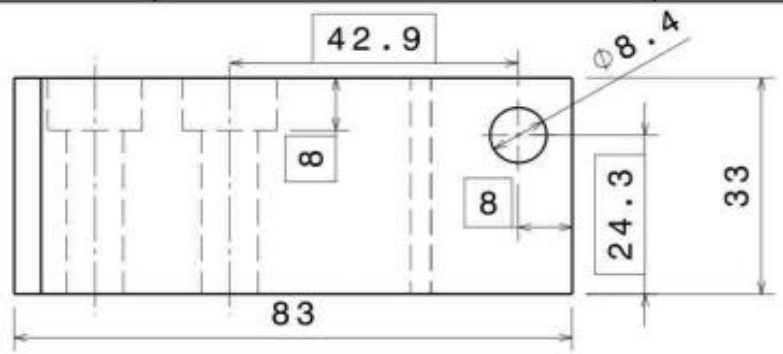

Vue de dessous
Echelle : 1:1

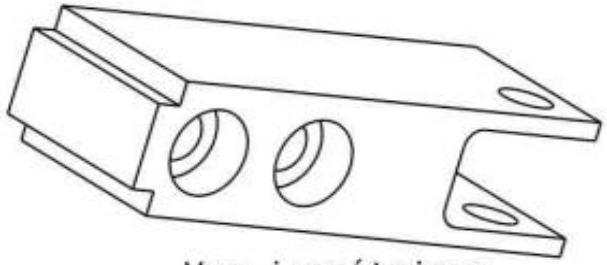

Vue isométrique
Echelle : 1:1

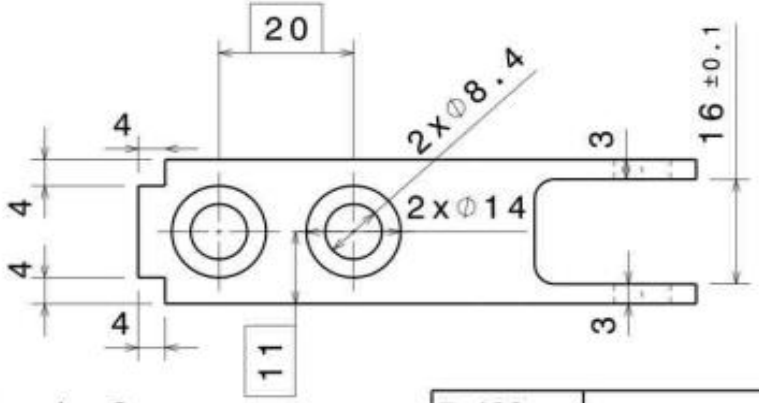

Vue de face
Echelle : 1:1

Rayon de congés à votre convenance

Tolérances générales ISO 2768 - mK

Taille A4		Ecurie Piston Sport Auto	
Dessiné par P-Antoine ALLART	Date 18/12/2016	Désignation Chape direction sur PM	
Coordonnées 06 48 14 14 48 pallart@ec-lyon.fr		Quantité 3	Matériau Alu 2017	Version v1.0
Plan vérifié par VPY		Echelle 1:1	N° du plan 17B_L_009_DIR	Feuille 1/1

University	Ecole Centrale de Lyon		Back to BOM	**Car #**	81	**Part Cost**	$ 7.10
System	Suspension System	Drawing :	FileLink1			**Qty**	1
Assembly	Front Upright Assembly		**FileLink2**	**FileLink1**			
Part	Caliper tab		**FileLink3**	**FileLink2**		**Extended Cost**	$ 7.10
P/N Base	SU 10003			**FileLink3**			
Suffix	AA						
Details	To hold the caliper						

ItemOrder	Material	Use	UnitCost	Size1	Unit1	Size2	Unit2	Area Name	Area	Length	Density	Quantity	Sub Total
10	Steel, Mild		$ 2.25	1.036	kg			Rectangular area, 220x100 mm	2.20E-02	0.006	7850	1	$ 2.33
												Sub Total	**$ 2.33**

ItemOrder	Process	Use	UnitCost	Unit	Quantity	Multiplier	Mult. Val.	Sub Total
10	Machining Setup, Install and remove		$ 1.30	Unit	1		1	$ 1.30
20	Laser Cut		$ 0.01	cm	115.57	Material - Steel	3	$ 3.47
							Sub Total	**$ 4.77**

SU 10003

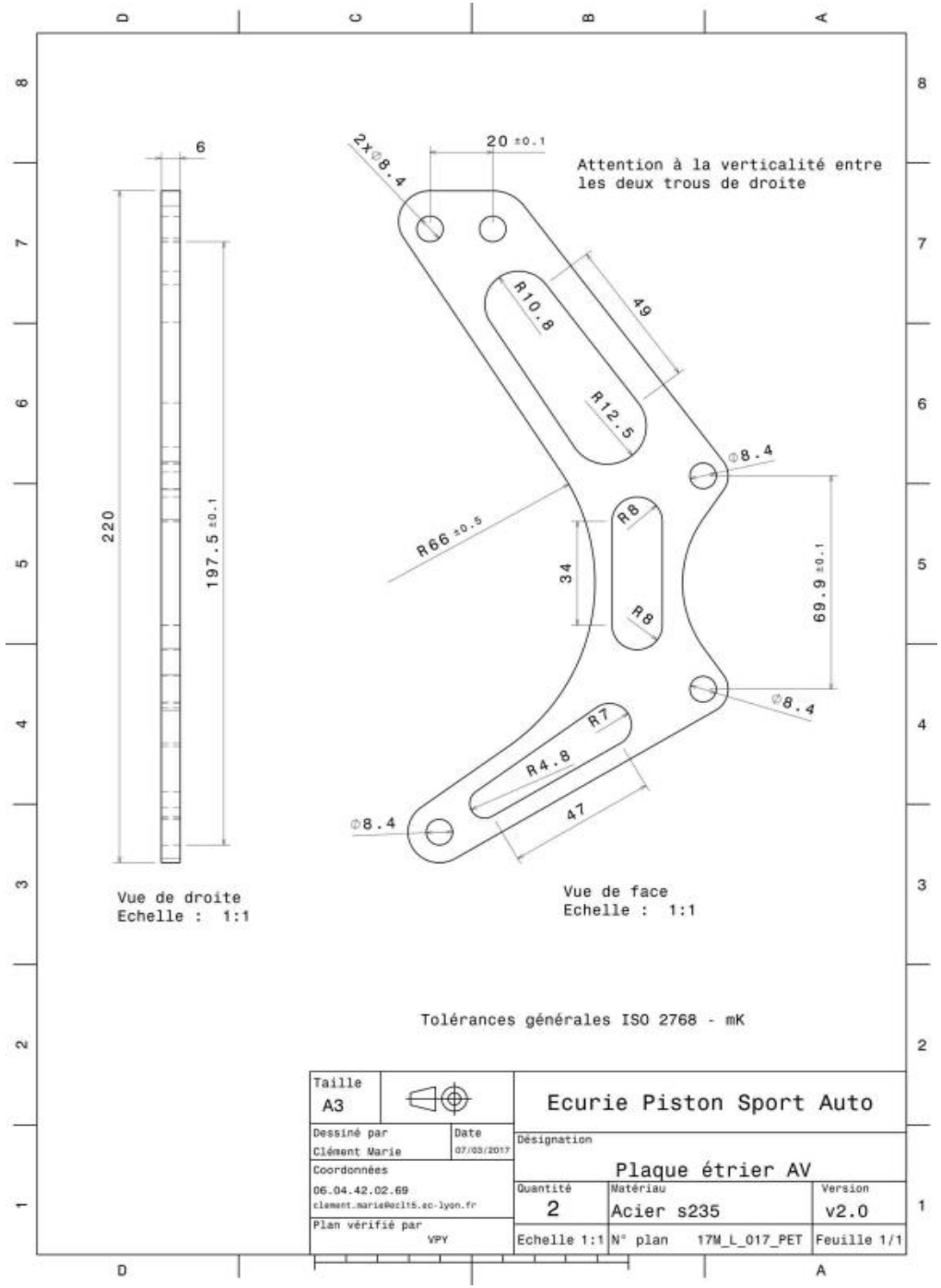
6
220
197.5 ±0.1
Vue de droite
Echelle : 1:1
2x⌀8.4
20 ±0.1
Attention à la verticalité entre
les deux trous de droite
R10.8
49
R12.5
⌀8.4
R66 ±0.5
R8
34
R8
69.9 ±0.1
⌀8.4
R7
R4.8
47
⌀8.4
Vue de face
Echelle : 1:1
Tolérances générales ISO 2768 - mK
Taille
A3
Ecurie Piston Sport Auto
Dessiné par
Clément Marie
Date
07/03/2017
Désignation
Plaque étrier AV
Coordonnées
06.04.42.02.69
clement.marie@ecl15.ec-lyon.fr
Quantité
2
Matériau
Acier s235
Version
v2.0
Plan vérifié par
VPY
Echelle 1:1
N° plan
17M_L_017_PET
Feuille 1/1

University	Ecole Centrale de Lyon			Back to BOM	**Car #**	81	**Part Cost**	$	6.90
System	Suspension System	Drawing :	FileLink1				**Qty**		1
Assembly	Front Upright Assembly		**FileLink2**		**FileLink1**				
Part	Upper A-arm tab		**FileLink3**		**FileLink2**		**Extended Cost**	$	6.90
P/N Base	SU 10004				**FileLink3**				
Suffix	AA								
Details	To hold the upper A-arm								

ItemOrder	Material	Use	UnitCost	Size1	Unit1	Size2	Unit2	Area Name	Area	Length	Density	Quantity	Sub Total
10	Aluminium, Normal		$ 4.20	0.298	kg			Rectangular area,55x50 mm	2.75E-03	0.04	2712	1	$ 1.25
												Sub Total	**$ 1.25**

ItemOrder	Process	Use	UnitCost	Unit	Quantity	Multiplier	Mult. Val.	Sub Total
10	Machining Setup, Install and remove		$ 1.30	Unit	1		1	$ 1.30
20	Machining	Outer profile	$ 0.04	cm^3	74.57	Material - Aluminium	1	$ 2.98
30	Machining, Change		$ 0.65	Unit	1		1	$ 0.65
40	Machining	Horizontal drillings	$ 0.04	cm^3	0.86	Material - Aluminium	1	$ 0.03
50	Machining, Change		$ 0.65	Unit	1		1	$ 0.65
60	Machining	Vertical drillings	$ 0.04	cm^3	0.73	Material - Aluminium	1	$ 0.03
							Sub Total	**$ 5.65**

SU 10004

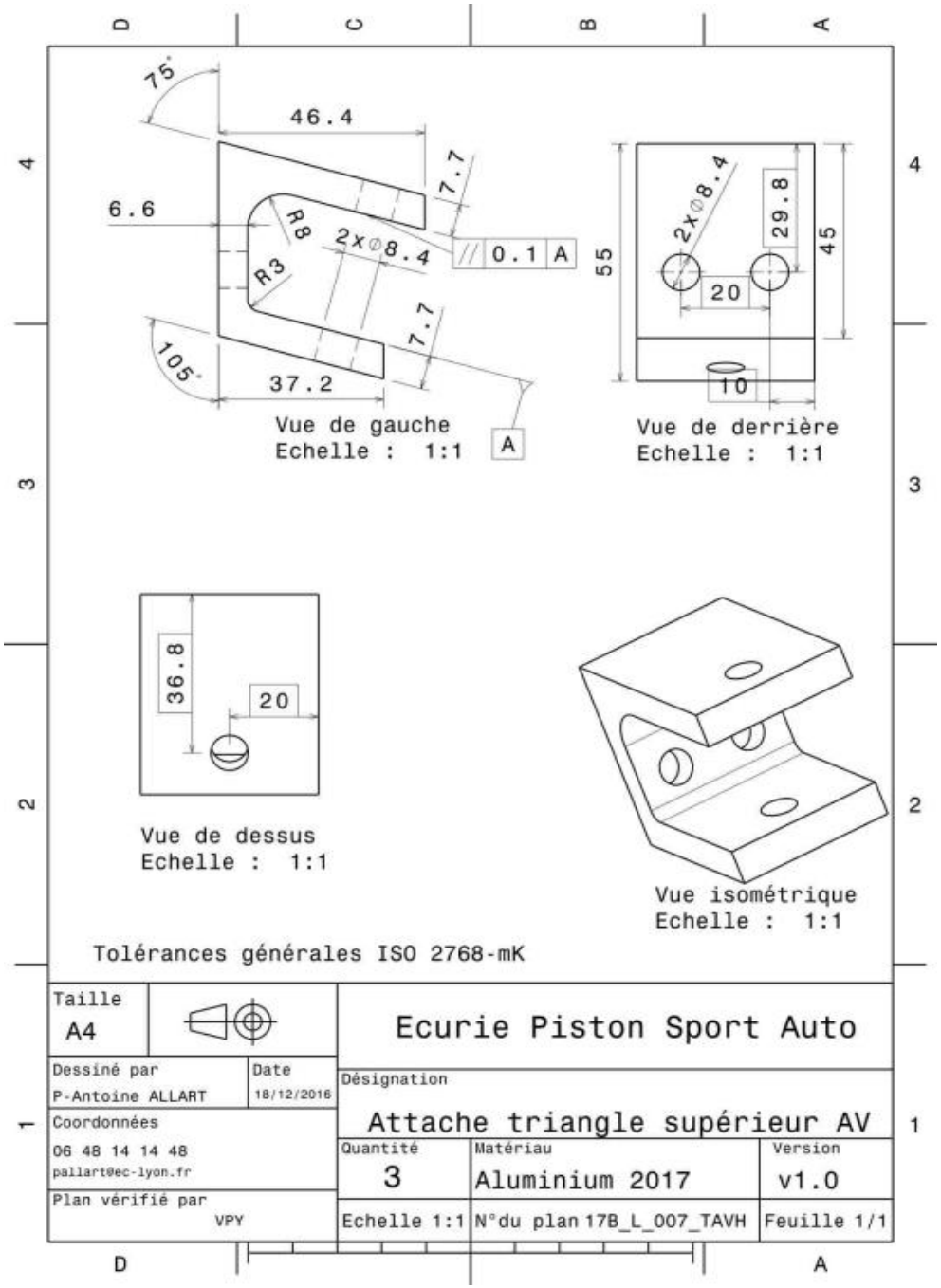
75°
46.4
7.7
6.6
R8
2x∅8.4
R3
// 0.1 A
7.7
105°
37.2
A
Vue de gauche
Echelle : 1:1
55
2x∅8.4
29.8
45
20
10
Vue de derrière
Echelle : 1:1
36.8
20
Vue de dessus
Echelle : 1:1
Vue isométrique
Echelle : 1:1
Tolérances générales ISO 2768-mK
Taille
A4
Ecurie Piston Sport Auto
Dessiné par
P-Antoine ALLART
Date
18/12/2016
Désignation
Attache triangle supérieur AV
Coordonnées
06 48 14 14 48
pallart@ec-lyon.fr
Quantité
3
Matériau
Aluminium 2017
Version
v1.0
Plan vérifié par
VPY
Echelle 1:1
N°du plan 17B_L_007_TAVH
Feuille 1/1

University	Ecole Centrale de Lyon		Back to BOM	**Car #**	81	**Part Cost**	$ 8.85
System	Suspension System	Drawing :	FileLink1			**Qty**	1
Assembly	Front Upright Assembly		**FileLink2**	**FileLink1**			
Part	Lower A-arm tab		**FileLink3**	**FileLink2**		**Extended Cost**	$ 8.85
P/N Base	SU 10005			**FileLink3**			
Suffix	AA						
Details	To hold the lower A-arm						

ItemOrder	Material	Use	UnitCost	Size1	Unit1	Size2	Unit2	Area Name	Area	Length	Density	Quantity	Sub Total
10	Aluminium, Normal		$ 4.20	0.477	kg			Rectangular area, 80x55 mm	4.40E-03	0.04	2712	1	$ 2.00
												Sub Total	**$ 2.00**

ItemOrder	Process	Use	UnitCost	Unit	Quantity	Multiplier	Mult. Val.	Sub Total
10	Machining Setup, Install and remove		$ 1.30	Unit	1		1	$ 1.30
20	Machining	Inner	$ 0.04	cm^3	112.41	Material - Aluminium	1	$ 4.50
30	Machining, Change		$ 0.65	Unit	1		1	$ 0.65
40	Machining	Drillings and profile	$ 0.04	cm^3	9.91	Material - Aluminium	1	$ 0.40
							Sub Total	**$ 6.84**

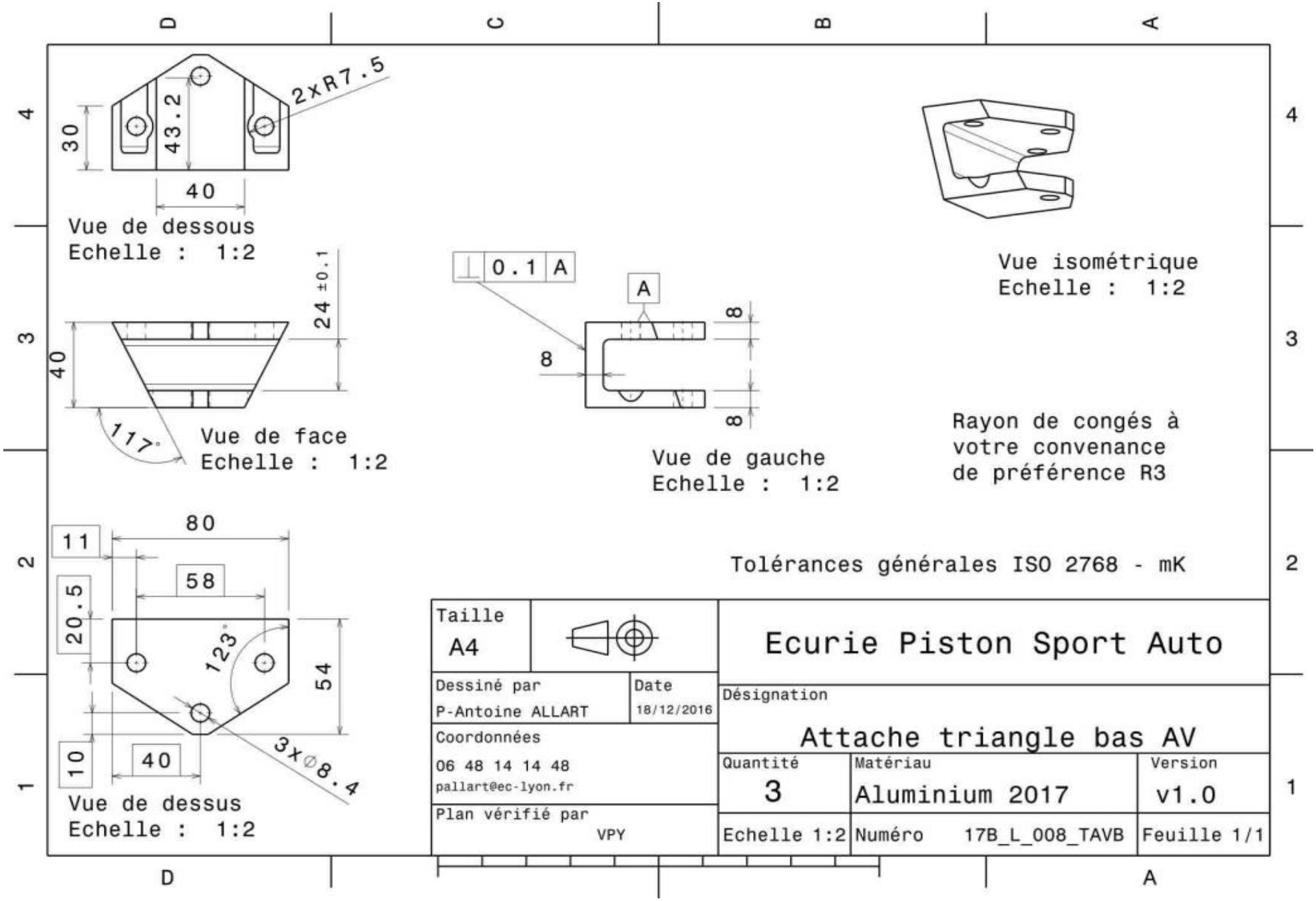
2xR7.5
30
43.2
40
Vue de dessous
Echelle : 1:2
24 ±0.1
40
117°
Vue de face
Echelle : 1:2
0.1 A
A
8
8
8
Vue de gauche
Echelle : 1:2
Vue isométrique
Echelle : 1:2
Rayon de congés à
votre convenance
de préférence R3
Tolérances générales ISO 2768 - mK
80
11
58
20.5
123°
54
10
40
3x⌀8.4
Vue de dessus
Echelle : 1:2
Taille
A4
Dessiné par
P-Antoine ALLART
Date
18/12/2016
Coordonnées
06 48 14 14 48
pallart@ec-lyon.fr
Plan vérifié par
VPY
Ecurie Piston Sport Auto
Désignation
Attache triangle bas AV
Quantité
3
Matériau
Aluminium 2017
Version
v1.0
Echelle 1:2
Numéro
17B_L_008_TAVB
Feuille 1/1

University	Ecole Centrale de Lyon		Back to BOM	**Car #**	81	**Part Cost**	$ 0.91
System	Suspension System	Drawing :	FileLink1			**Qty**	1
Assembly	Front Upright Assembly		**FileLink2**	**FileLink1**			
Part	Camber adjustment shim		**FileLink3**	**FileLink2**		**Extended Cost**	$ 0.91
P/N Base	SU 10006			**FileLink3**			
Suffix	AA						
Details	To adjust the camber						

ItemOrder	Material	Use	UnitCost	Size1	Unit1	Size2	Unit2	Area Name	Area	Length	Density	Quantity	Sub Total
10	Aluminium, Normal		$ 4.20	0.049	kg			Rectangular area, 40x45 mm	1.80E-03	0.01	2712	1	$ 0.21
												Sub Total	**$ 0.21**

ItemOrder	Process	Use	UnitCost	Unit	Quantity	Multiplier	Mult. Val.	Sub Total
10	Machining Setup, Install and remove		$ 1.30	Unit	1	2 parts cut from a single machine setup	0.5	$ 0.65
20	Laser cut		$ 0.01	cm	5.28	Material - Aluminium	1	$ 0.05
							Sub Total	**$ 0.70**

SU 10006

A (épaisseur en mm)	Quantité
0.5	6
1	6
3	4
5	3
8	3
10	3

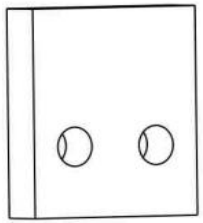

Isometric view
Scale: 1:1

Right view
Scale: 1:1

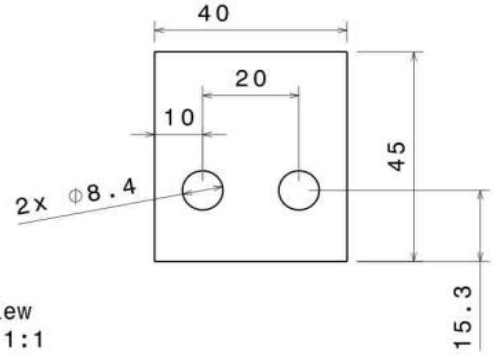

Front view
Scale: 1:1

Tolérances générales ISO 2768 - mK

Taille A4		Ecurie Piston Sport Auto	
Dessiné par Clément MARIE	Date 03/01/2017	Désignation Cale carrossage AV	
Coordonnées cmarie@ec-lyon.fr 06.04.42.02.69		Quantité 25	Matériau Aluminium 2017 T4	Version 1.0
Plan vérifié par PAT		Echelle 1:1	N° plan 17T_L_013_CAL	Feuille 1/1

University	Ecole Centrale de Lyon		Back to BOM	**Car #**	81	**Part Cost**	$ 1.01
System	Suspension System	Drawing :	FileLink1			**Qty**	1
Assembly	Front Upright Assembly	**FileLink2**		**FileLink1**			
Part	Speed sensor front mount	**FileLink3**		**FileLink2**		**Extended Cost**	$ 1.01
P/N Base	SU 10007			**FileLink3**			
Suffix	AA						
Details	Part to hold a speed sensor						

ItemOrder	Material	Use	UnitCost	Size1	Unit1	Size2	Unit2	Area Name	Area	Length	Density	Quantity	Sub Total
10	Aluminium, Normal		$ 4.20	0.006	kg			Rectangular area, 68x20 mm	1.36E-03	1.50E-03	2712	1	$ 0.02
												Sub Total	**$ 0.02**

ItemOrder	Process	Use	UnitCost	Unit	Quantity	Multiplier	Mult. Val.	Sub Total
10	Machining Setup, Install and remove		$ 1.30	Unit	1	2 parts cut from a single machine setup	0.5	$ 0.65
20	Laser cut		$ 0.01	cm	9.14	Material - Aluminium	1	$ 0.09
30	Sheet metal bends		$ 0.25	bend	1		1	$ 0.25
							Sub Total	**$ 0.99**

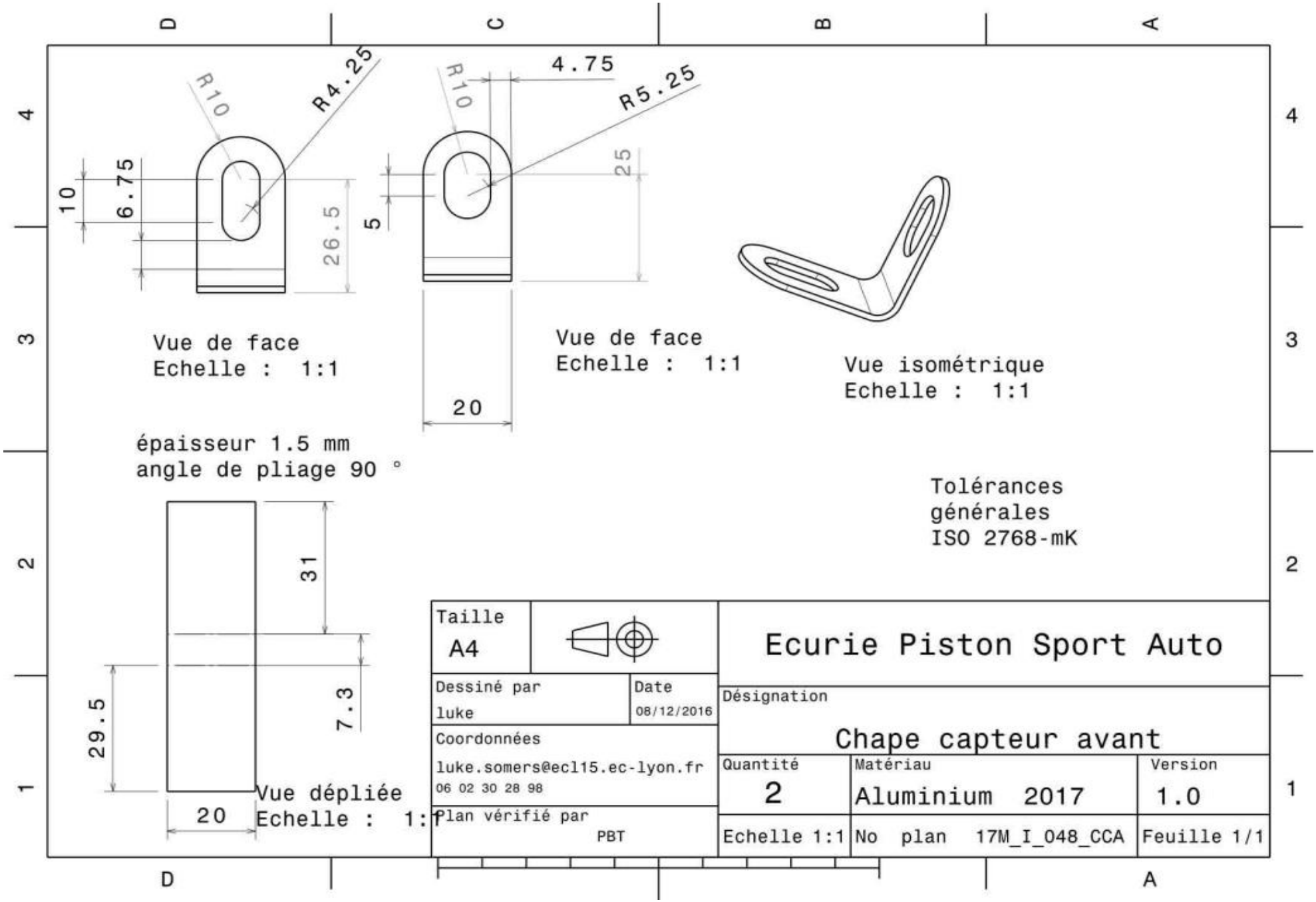
R10
R4.25
10
6.75
26.5
Vue de face
Echelle : 1:1
R10
4.75
R5.25
25
5
20
Vue de face
Echelle : 1:1
Vue isométrique
Echelle : 1:1
épaisseur 1.5 mm
angle de pliage 90 °
Tolérances
générales
ISO 2768-mK
31
7.3
29.5
20
Vue dépliée
Echelle : 1:1
Taille
A4
Dessiné par
luke
Date
08/12/2016
Coordonnées
luke.somers@ecl15.ec-lyon.fr
06 02 30 28 98
Plan vérifié par
PBT
Ecurie Piston Sport Auto
Désignation
Chape capteur avant
Quantité
2
Matériau
Aluminium 2017
Version
1.0
Echelle 1:1
No plan 17M_I_048_CCA
Feuille 1/1

University	Ecole Centrale de Lyon
System	Suspension System
Assembly	Rear Upright Assembly
P/N Base	SU A0011
Suffix	AA
Details	Multi-parts upright assembly, which are then screwed together

Back to BOM

Car #	81	**Asm Cost**	$ 76.39
		Qty	2
FileLink1			
FileLink2		**Extended Cost**	$ 152.77
FileLink3			

ItemOrder	Part	Part Cost	Quantity	Sub Total
10	Rear upright	$ 30.35	1	$ 30.35
20	Caliper tab	$ 6.49	1	$ 6.49
30	Upper A-arm tab	$ 6.34	1	$ 6.34
40	Lower A-arm tab	$ 10.10	1	$ 10.10
50	Camber adjustment shim	$ 0.93	1	$ 0.93
60	Speed sensor rear mount	$ 1.25	1	$ 1.25
			Sub Total	**$ 55.47**

ItemOrder	Process	Use	UnitCost	Unit	Quantity	Multiplier	Mult. Val.	Sub Total
10	Assemble, 3kg, Interference	Assemble upright with rear hub	$ 0.56	Unit	1		1	$ 0.56
20	Assemble, 1kg, Line-on-Line	Assemble lower A-arm tab with upright	$ 0.13	Unit	1		1	$ 0.13
30	Ratchet <= 25.4 mm	Bolt lower tab and upright	$ 0.75	Unit	2		1	$ 1.50
40	Reaction Tool <= 25.4 mm	Bolt lower tab and upright	$ 0.25	Unit	2		1	$ 0.50
50	Assemble, 1kg, Line-on-Line	Assemble camber shim with upright	$ 0.13	Unit	1		1	$ 0.13
60	Assemble, 1kg, Line-on-Line	Assemble upper tab with upright	$ 0.13	Unit	1		1	$ 0.13
70	Assemble, 1kg, Line-on-Line	Assemble the upper section of caliper tab with upright	$ 0.13	Unit	1		1	$ 0.13
80	Ratchet <= 25.4 mm	Bolt upper tab, camber shim and caliper tab with upright	$ 0.75	Unit	2		1	$ 1.50
90	Reaction Tool <= 25.4 mm	Bolt upper tab, camber shim and caliper tab with upright	$ 0.25	Unit	2		1	$ 0.50
110	Assemble, 1kg, Line-on-Line	Assemble the lower section of caliper tab with upright	$ 0.13	Unit	1		1	$ 0.13
120	Ratchet <= 25.4 mm	Bolt caliper tab with upright	$ 0.75	Unit	1		1	$ 0.75
130	Reaction Tool <= 25.4 mm	Bolt caliper tab with upright	$ 0.25	Unit	1		1	$ 0.25
160	Assemble, 5kg, Line-on-Line	Assemble upright assembly with frame	$ 0.63	Unit	1		1	$ 0.63
170	Ratchet <= 25.4 mm	Bolt upright assembly with rear A-arms	$ 0.75	Unit	3		1	$ 2.25
180	Reaction Tool <= 25.4 mm	Bolt upright assembly with rear A-arms	$ 0.25	Unit	3		1	$ 0.75
190	Suspension Setup-Independent Susp. (per corner)	Camber and toe adjustment	$ 8.75	Unit	1		1	$ 8.75
							Sub Total	**$ 18.59**

University	Ecole Centrale de Lyon		Back to BOM	**Car #**	81	**Part Cost**	$ 30.35
System	Suspension System	Drawing :	FileLink1			**Qty**	1
Assembly	Rear Upright Assembly		**FileLink2**	**FileLink1**			
Part	Rear upright		**FileLink3**	**FileLink2**		**Extended Cost**	$ 30.35
P/N Base	SU 11001			**FileLink3**			
Suffix	AA						
Details	Main part of the assembly						

ItemOrder	Material	Use	UnitCost	Size1	Unit1	Size2	Unit2	Area Name	Area	Length	Density	Quantity	Sub Total
10	Aluminum, Premium		$ 4.20	2.075	kg			Rectangular area, 255x100 mm	2.55E-02	0.03	2712	1	$ 8.71
												Sub Total	**$ 8.71**

ItemOrder	Process	Use	UnitCost	Unit	Quantity	Multiplier	Mult. Val.	Sub Total
10	Machining Setup, Install and remove		$ 1.30	Unit	1		1	$ 1.30
20	Machining	Outer profile, first bearing	$ 0.04	cm^3	408.06	Aluminium	1	$ 16.32
30	Machining Setup, Change		$ 0.65	Unit	1		1	$ 0.65
40	Machining	Second bearing	$ 0.04	cm^3	65.34	Aluminium	1	$ 2.61
50	Machining Setup, Change		$ 0.65	Unit	1		1	$ 0.65
60	Machining	Last holes	$ 0.04	cm^3	2.55	Aluminium	1	$ 0.10
							Sub Total	**$ 21.64**

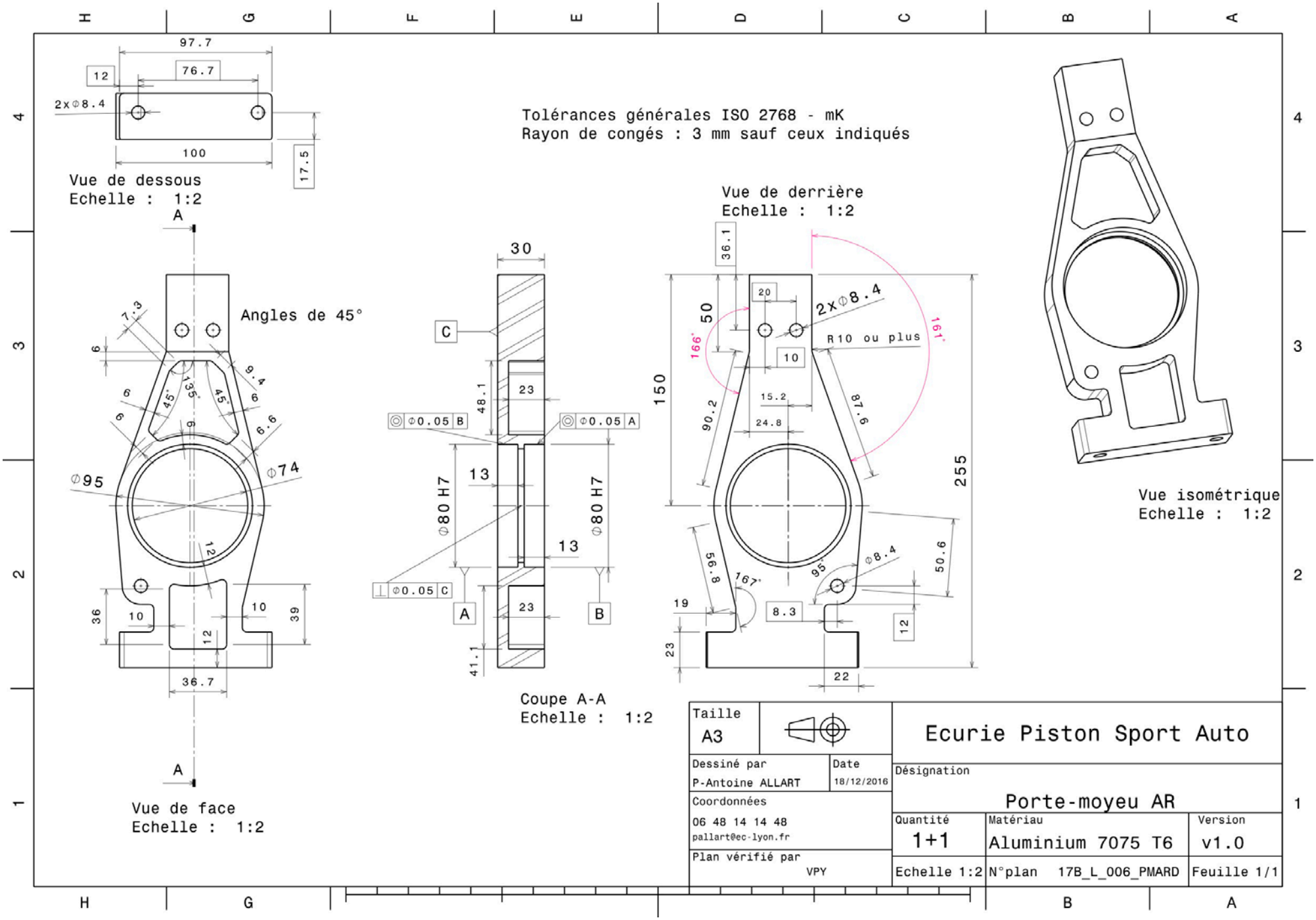
Tolérances générales ISO 2768 - mK
Rayon de congés : 3 mm sauf ceux indiqués
Vue de dessous
Echelle : 1:2
Vue de face
Echelle : 1:2
Angles de 45°
Coupe A-A
Echelle : 1:2
Vue de derrière
Echelle : 1:2
Vue isométrique
Echelle : 1:2
R10 ou plus
Taille
A3
Dessiné par
P-Antoine ALLART
Date
18/12/2016
Coordonnées
06 48 14 14 48
pallart@ec-lyon.fr
Plan vérifié par
VPY
Ecurie Piston Sport Auto
Désignation
Porte-moyeu AR
Quantité
1+1
Matériau
Aluminium 7075 T6
Version
v1.0
Echelle 1:2
N°plan 17B_L_006_PMARD
Feuille 1/1

University	Ecole Centrale de Lyon			Back to BOM	**Car #**	81	**Part Cost**	$	6.49
System	Suspension System	Drawing :	FileLink1				**Qty**		1
Assembly	Rear Upright Assembly		**FileLink2**		**FileLink1**				
Part	Caliper tab		**FileLink3**		**FileLink2**		**Extended Cost**	$	6.49
P/N Base	SU 11002				**FileLink3**				
Suffix	AA								
Details	To hold the caliper								

ItemOrder	Material	Use	UnitCost	Size1	Unit1	Size2	Unit2	Area Name	Area	Length	Density	Quantity	Sub Total
10	Steel, Mild		$ 2.25	0.805	kg			Rectangular area, 190x90 mm	1.71E-02	0.006	7850	1	$ 1.81
												Sub Total	**$ 1.81**

ItemOrder	Process	Use	UnitCost	Unit	Quantity	Multiplier	Mult. Val.	Sub Total
10	Machining Setup, Install and remove		$ 1.30	Unit	1		1	$ 1.30
20	Laser Cut		$ 0.01	cm	112.71	Material - Steel	3	$ 3.38
							Sub Total	**$ 4.68**

SU 11002

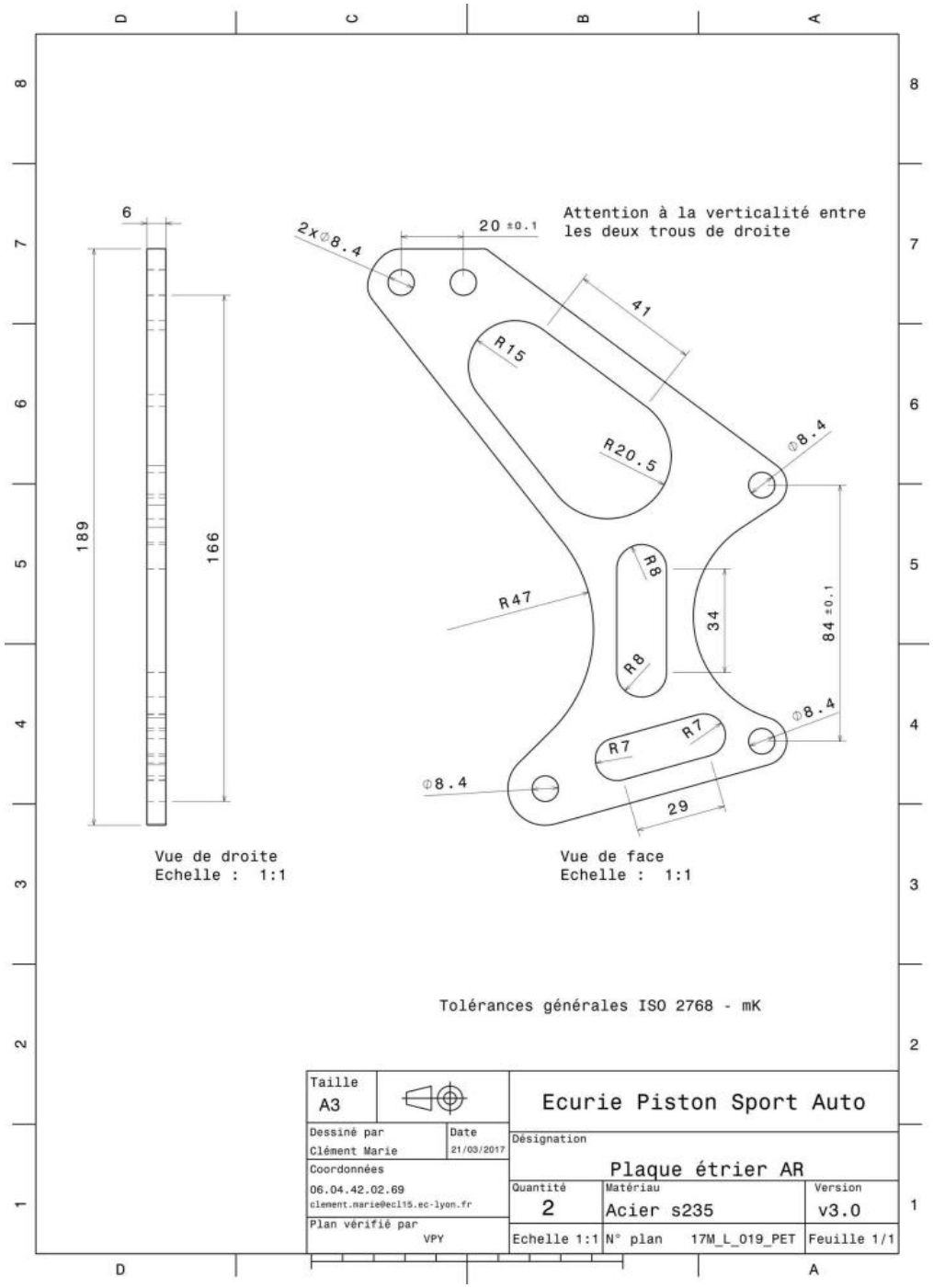
6
189
166
Vue de droite
Echelle : 1:1
2x⌀8.4
20 ±0.1
Attention à la verticalité entre les deux trous de droite
41
R15
R20.5
⌀8.4
R47
R8
R8
34
84 ±0.1
⌀8.4
R7
R7
⌀8.4
29
Vue de face
Echelle : 1:1
Tolérances générales ISO 2768 - mK
Taille
A3
Ecurie Piston Sport Auto
Dessiné par
Clément Marie
Date
21/03/2017
Désignation
Plaque étrier AR
Coordonnées
06.04.42.02.69
clement.marie@ecl15.ec-lyon.fr
Quantité
2
Matériau
Acier s235
Version
v3.0
Plan vérifié par
VPY
Echelle 1:1
N° plan
17M_L_019_PET
Feuille 1/1

University	Ecole Centrale de Lyon		Back to BOM	**Car #**	81	**Part Cost**	$ 6.34
System	Suspension System	Drawing :	FileLink1			**Qty**	1
Assembly	Rear Upright Assembly		**FileLink2**	**FileLink1**			
Part	Upper A-arm tab		**FileLink3**	**FileLink2**		**Extended Cost**	$ 6.34
P/N Base	SU 11003			**FileLink3**			
Suffix	AA						
Details	To hold the upper A-arm tab						

ItemOrder	Material	Use	UnitCost	Size1	Unit1	Size2	Unit2	Area Name	Area	Length	Density	Quantity	Sub Total
10	Aluminium, Normal		$ 4.20	0.293	kg			Rectangular area,60x45 mm	2.70E-03	0.04	2712	1	$ 1.23
												Sub Total	**$ 1.23**

ItemOrder	Process	Use	UnitCost	Unit	Quantity	Multiplier	Mult. Val.	Sub Total
10	Machining Setup, Install and remove		$ 1.30	Unit	1		1	$ 1.30
20	Machining	Outer profile	$ 0.04	cm^3	59.87	Material - Aluminium	1	$ 2.39
30	Machining, Change		$ 0.65	Unit	1		1	$ 0.65
40	Machining	Horizontal drillings	$ 0.04	cm^3	2.09	Material - Aluminium	1	$ 0.08
50	Machining, Change		$ 0.65	Unit	1		1	$ 0.65
60	Machining	Vertical drillings	$ 0.04	cm^3	0.89	Material - Aluminium	1	$ 0.04
							Sub Total	**$ 5.11**

SU 11003

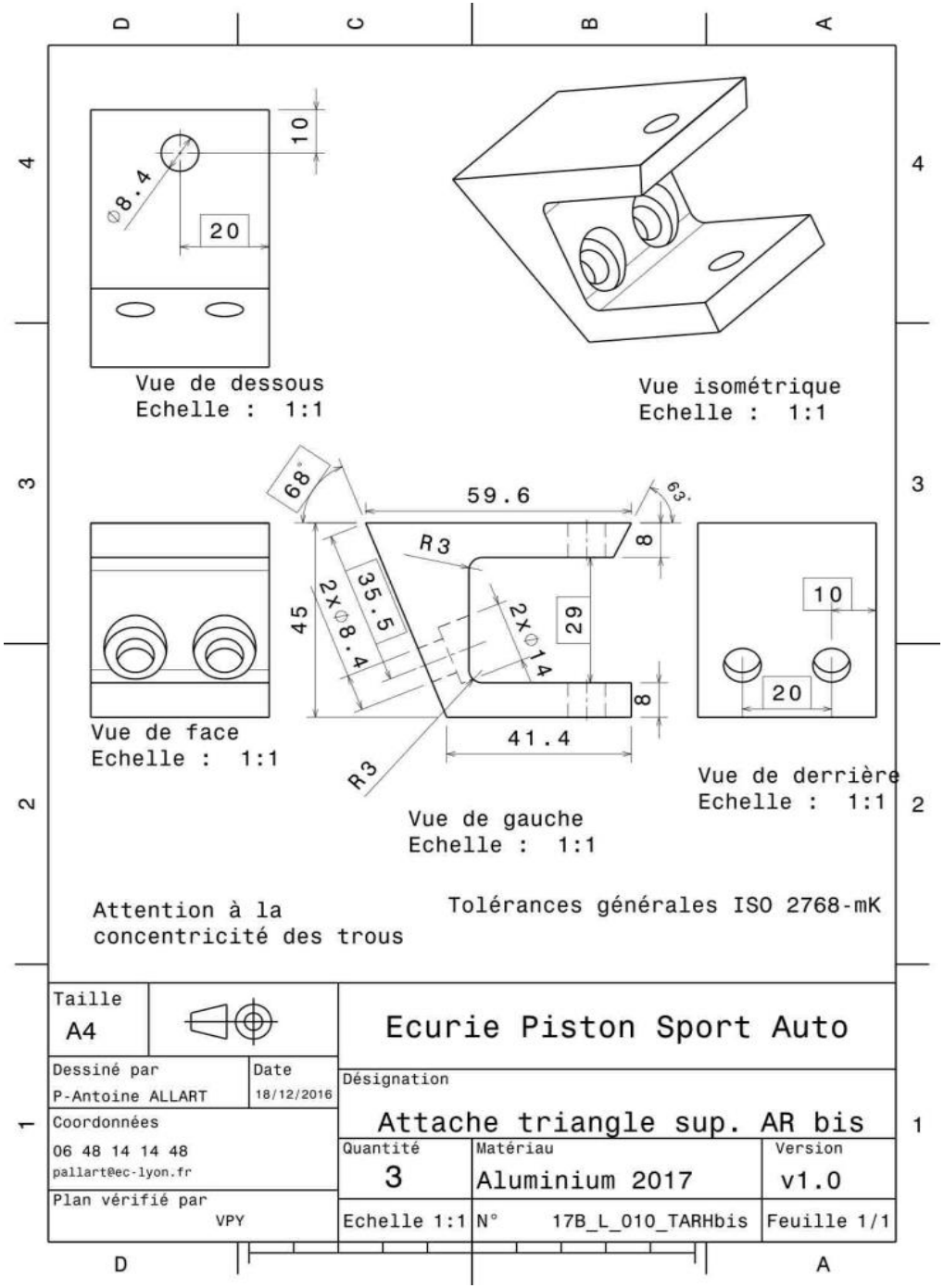
Vue de dessous
Echelle : 1:1
Vue isométrique
Echelle : 1:1
Vue de face
Echelle : 1:1
Vue de gauche
Echelle : 1:1
Vue de derrière
Echelle : 1:1
Attention à la concentricité des trous
Tolérances générales ISO 2768-mK
Taille A4
Ecurie Piston Sport Auto
Dessiné par P-Antoine ALLART
Date 18/12/2016
Désignation
Attache triangle sup. AR bis
Coordonnées
06 48 14 14 48
pallart@ec-lyon.fr
Quantité 3
Matériau Aluminium 2017
Version v1.0
Plan vérifié par VPY
Echelle 1:1
N° 17B_L_010_TARHbis
Feuille 1/1

University	Ecole Centrale de Lyon		Back to BOM	**Car #**	81	**Part Cost**	$ 10.10
System	Suspension System	Drawing :	FileLink1			**Qty**	1
Assembly	Rear Upright Assembly	**FileLink2**		**FileLink1**			
Part	Lower A-arm tab	**FileLink3**		**FileLink2**		**Extended Cost**	$ 10.10
P/N Base	SU 11004			**FileLink3**			
Suffix	AA						
Details	To hold the lower A-arm tab and the rear tie-rod						

ItemOrder	Material	Use	UnitCost	Size1	Unit1	Size2	Unit2	Area Name	Area	Length	Density	Quantity	Sub Total
10	Aluminium, Normal		$ 4.20	0.597	kg			Rectangular area, 100x55 mm	5.50E-03	0.04	2712	1	$ 2.51
												Sub Total	**$ 2.51**

ItemOrder	Process	Use	UnitCost	Unit	Quantity	Multiplier	Mult. Val.	Sub Total
10	Machining Setup, Install and remove		$ 1.30	Unit	1		1	$ 1.30
20	Machining	Inner and profile	$ 0.04	cm^3	128.85	Material - Aluminium	1	$ 5.15
30	Machining, Change		$ 0.65	Unit	1		1	$ 0.65
40	Machining	Drillings	$ 0.04	cm^3	12.26	Material - Aluminium	1	$ 0.49
							Sub Total	**$ 7.59**

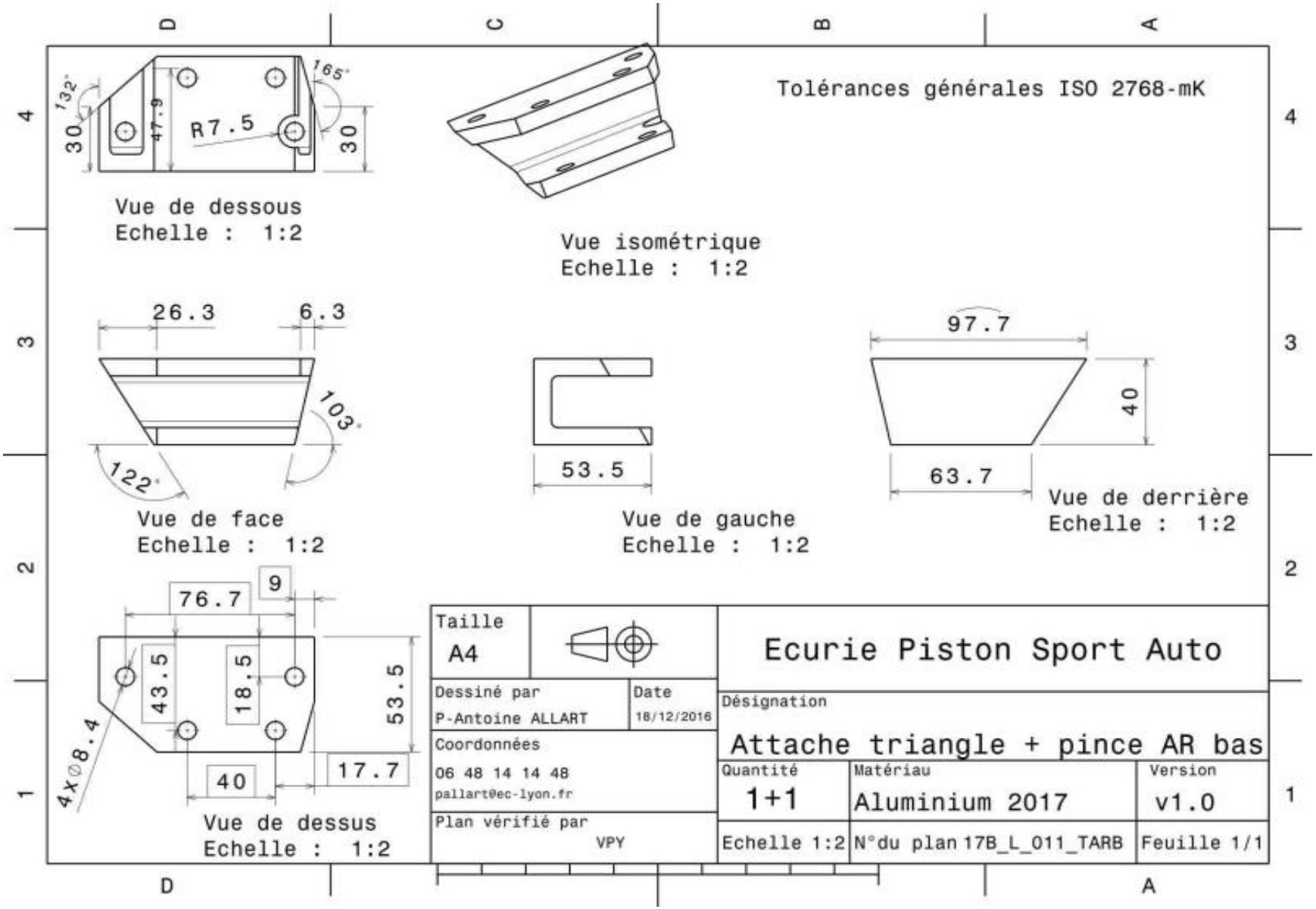
Tolérances générales ISO 2768-mK
Vue de dessous
Echelle : 1:2
132°
165°
30
47.9
R7.5
30
Vue isométrique
Echelle : 1:2
26.3
6.3
103°
122°
Vue de face
Echelle : 1:2
53.5
Vue de gauche
Echelle : 1:2
97.7
40
63.7
Vue de derrière
Echelle : 1:2
76.7
9
43.5
18.5
53.5
4xØ8.4
40
17.7
Vue de dessus
Echelle : 1:2
Taille
A4
Dessiné par
P-Antoine ALLART
Date
18/12/2016
Coordonnées
06 48 14 14 48
pallart@ec-lyon.fr
Plan vérifié par
VPY
Ecurie Piston Sport Auto
Désignation
Attache triangle + pince AR bas
Quantité
1+1
Matériau
Aluminium 2017
Version
v1.0
Echelle 1:2
N°du plan 17B_L_011_TARB
Feuille 1/1

University	Ecole Centrale de Lyon		Back to BOM	**Car #**	81	**Part Cost**	$ 0.93
System	Suspension System	Drawing :	FileLink1			**Qty**	1
Assembly	Rear Upright Assembly		**FileLink2**	**FileLink1**			
Part	Camber adjustment shim		**FileLink3**	**FileLink2**		**Extended Cost**	$ 0.93
P/N Base	SU 11005			**FileLink3**			
Suffix	AA						
Details	To adjust the camber						

ItemOrder	Material	Use	UnitCost	Size1	Unit1	Size2	Unit2	Area Name	Area	Length	Density	Quantity	Sub Total
10	Aluminium, Normal		$ 4.20	0.054	kg			Rectangular area, 50x40 mm	2.00E-03	0.01	2712	1	$ 0.23
												Sub Total	**$ 0.23**

ItemOrder	Process	Use	UnitCost	Unit	Quantity	Multiplier	Mult. Val.	Sub Total
10	Machining Setup, Install and remove		$ 1.30	Unit	1	2 parts cut from a single machine setup	0.5	$ 0.65
20	Laser cut		$ 0.01	cm	5.28	Material - Aluminium	1	$ 0.05
							Sub Total	**$ 0.70**

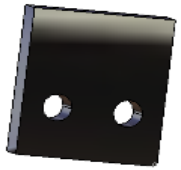

A (épaisseur en mm)	Quantité
0.5	6
1	6
3	4
5	3
8	3
10	3

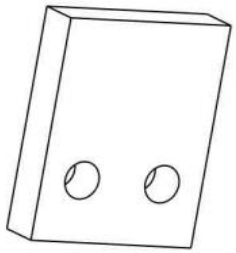

Isometric view
Scale: 1:1

Right view
Scale: 1:1

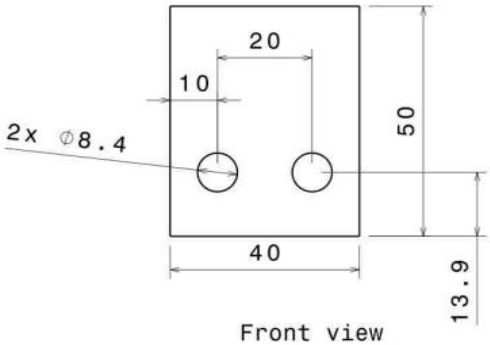

Front view
Scale: 1:1

Tolérances générales ISO 2768 - mK

Taille A4		Ecurie Piston Sport Auto
Dessiné par Clément MARIE	Date 03/01/2017	Désignation: Cale carrossage AR
Coordonnées cmarie@ec-lyon.fr 06.04.42.02.69		Quantité 25 / Matériau Aluminium 2017 T4 / Version 1.0
Plan vérifié par PAT		Echelle 1:1 / N° plan 17T_L_013_CAL / Feuille 1/1

University	Ecole Centrale de Lyon		Back to BOM	**Car #**	81	**Part Cost**	$ 1.25
System	Suspension System	Drawing :	FileLink1			**Qty**	1
Assembly	Rear Upright Assembly	**FileLink2**		**FileLink1**			
Part	Speed sensor rear mount	**FileLink3**		**FileLink2**		**Extended Cost**	$ 1.25
P/N Base	SU 11006			**FileLink3**			
Suffix	AA						
Details	Part to hold a speed sensor						

ItemOrder	Material	Use	UnitCost	Size1	Unit1	Size2	Unit2	Area Name	Area	Length	Density	Quantity	Sub Total
10	Aluminium, Normal		$ 4.20	0.005	kg			Rectangular area, 60x20 mm	1.20E-03	1.50E-03	2712	1	$ 0.02
												Sub Total	**$ 0.02**

ItemOrder	Process	Use	UnitCost	Unit	Quantity	Multiplier	Mult. Val.	Sub Total
10	Machining Setup, Install and remove		$ 1.30	Unit	1	2 parts cut from a single machine setup	0.5	$ 0.65
20	Laser cut		$ 0.01	cm	7.93	Material - Aluminium	1	$ 0.08
30	Sheet metal bends		$ 0.25	bend	2		1	$ 0.50
							Sub Total	**$ 1.23**

Ecurie Piston Sport Auto

ÉCOLE CENTRALE LYON

CAR #81

Wheels, Wheel Bearings & Tires

University	Ecole Centrale de Lyon	Back to BOM	**Car #**	81	**Asm Cost** $ 175.23
System	Wheels, Wheel Bearings and Tires				**Qty** 4
Assembly	Wheel Assembly		**FileLink1**		
P/N Base	WT A0001		**FileLink2**		**Extended Cost** $ 700.92
Suffix	AA		**FileLink3**		
Details	Complete Wheel Assembly				

ItemOrder	Material	Use	UnitCost	Size1	Unit1	Size2	Unit2	Area Name	Area	Length	Density	Quantity	Sub Total
10	Wheel, 13", 1 Piece OZ, Aluminum	Rim	$ 80.00		unit							1	$ 80.00
20	Tire, Hoosier, R25B, 13"-20.5 x 7.0	Tire	$ 85.00		unit							1	$ 85.00
30	Valve Stem (and Tire Inflation)		$ 1.00		unit							1	$ 1.00
40	Wheel Weights (and Balancing)	Balancing and set up the wheel	$ 4.00		unit							1	$ 4.00
												Sub Total	**$ 170.00**

ItemOrder	Process	Use	UnitCost	Unit	Quantity	Multiplier	Mult. Val.	Sub Total
10	Assemble, 5kg, Line-on-Line	Fix Wheel on Hubs	$ 0.63	unit	1		1	$ 0.63
20	Ratchet <= 25.4 mm	Tighten Lug Nuts	$ 0.75	unit	4		1	$ 3.00
							Sub Total	**$ 3.63**

ItemOrder	Fastener	Use	UnitCost	Size1	Unit1	Size2	Unit2	Quantity	Sub Total
10	Nut, Lug	Fix Wheel on Hubs	$ 0.40		cm			4	$ 1.60
								Sub Total	**$ 1.60**

University	Ecole Centrale de Lyon	Back to BOM	**Car #**	81	**Asm Cost** $ 306.34
System	Wheels, Wheel Bearings and Tires				**Qty** 2
Assembly	Front Hubs		**FileLink1**		
P/N Base	WT A0002		**FileLink2**		**Extended Cost** $ 612.67
Suffix	AA		**FileLink3**		
Details	Assembly composed of a hub and two parts to measure the wheel's speed				

ItemOrder	Part	Part Cost	Quantity	Sub Total
10	Front Hub	$ 56.49	1	$ 56.49
20	Front speed wheel	$ 2.62	1	$ 2.62
30	Speed wheel spacer	$ 1.90	1	$ 1.90
			Sub Total	**$ 61.01**

ItemOrder	Material	Use	UnitCost	Size1	Unit1	Size2	Unit2	Area Name	Area	Length	Density	Quantity	Sub Total
10	Wheel Bearing, Ball, Angular Contact	Wheel Bearings	$ 115.38	80	mm	13	mm					2	$ 230.76
20	Locknut/L.P.///Steel/	Bearing Nuts	$ 8.50	55	mm							1	$ 8.50
30	Adhesive	Wheel studs and hub assemble, cost included in process	$ -										$ -
												Sub Total	**$ 239.26**

ItemOrder	Process	Use	UnitCost	Unit	Quantity	Multiplier	Mult. Val.	Sub Total
10	Assemble, 1 kg, Interference	Bearings Assemble	$ 0.19	unit	2		1	$ 0.38
20	Assemble, 1kg, Loose	Speed wheel spacer assemble on the hub	$ 0.06	unit	1		1	$ 0.06
30	Assemble, 1kg, Loose	Speed wheel assemble on the hub	$ 0.06	unit	1		1	$ 0.06
40	Assemble, 1kg, Loose	Bearing nut assemble on the hub	$ 0.06	unit	1		1	$ 0.06
50	Liquid Applicator Gun	Wheel studs and hub assemble	$ 0.02	cm	30.16		1	$ 0.60
60	Assemble, 1 kg, Line-on-Line	Wheel studs and hub assemble	$ 0.13	unit	4		1	$ 0.52
70	Assemble, 1 kg, Line-on-Line	Locknut on hub	$ 0.13	Unit	1		1	$ 0.13
							Sub Total	**$ 1.81**

ItemOrder	Fastener	Use	UnitCost	Size1	Unit1	Size2	Unit2	Quantity	Sub Total
10	Stud, Grade 12.9	Wheel Studs	$ 1.07	12	mm	62	mm	4	$ 4.26
								Sub Total	**$ 4.26**

University	Ecole Centrale de Lyon		Back to BOM	**Car #**	81	**Part Cost**	$ 56.49
System	Wheels, Wheel Bearings and Tires	Drawing :	FileLink1			**Qty**	1
Assembly	Front Hubs		**FileLink2**	**FileLink1**			
Part	Front Hub		**FileLink3**	**FileLink2**		**Extended Cost**	$ 56.49
P/N Base	WT 02001			**FileLink3**			
Suffix	AA						
Details	Main part of the assembly						

ItemOrder	Material	Use	UnitCost	Size1	Unit1	Size2	Unit2	Area Name	Area	Length	Density	Quantity	Sub Total
10	Aluminum, Premium		$ 4.20	3.294	kg			Round Area, 130mm diameter	1.33E-02	0.092	2712	1	$ 13.83
												Sub Total	**$ 13.83**

ItemOrder	Process	Use	UnitCost	Unit	Quantity	Multiplier	Mult. Val.	Sub Total
10	Machining Setup, Install and Remove		$ 1.30	Unit	1		1	$ 1.30
20	Machining	Turning	$ 0.04	cm^3	746.13	Material - Aluminium	1	$ 29.85
30	Machining Setup, Change		$ 0.65	Unit	1		1	$ 0.65
40	Machining	Turning	$ 0.04	cm^3	141.37	Material - Aluminium	1	$ 5.65
50	Machining Setup, Install and Remove		$ 0.65	Unit	1		1	$ 0.65
60	Machining	Milling	$ 0.04	cm^3	77.16	Material - Aluminium	1	$ 3.09
70	Machining Setup, Change		$ 0.65	Unit	1		1	$ 0.65
80	Machining	Milling	$ 0.04	cm^3	0.39	Material - Aluminium	1	$ 0.02
90	Threading, Internal (machining)	For wheel studs	$ 0.10	cm	6	Material - Aluminium	1	$ 0.60
100	Threading, External (machining)	For locknut	$ 0.10	cm	2	Material - Aluminium	1	$ 0.20
							Sub Total	**$ 42.65**

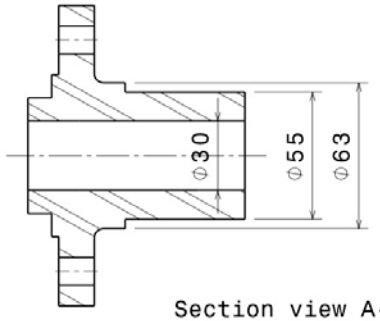

Section view A-A
Scale: 1:2

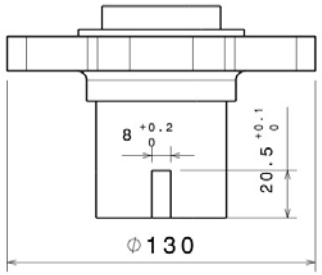

Vue de dessous
Echelle : 1:2

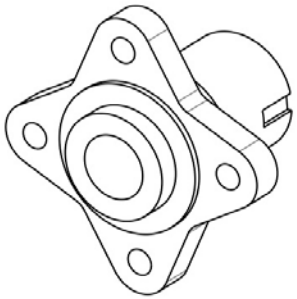

Vue isométrique
Echelle : 1:2

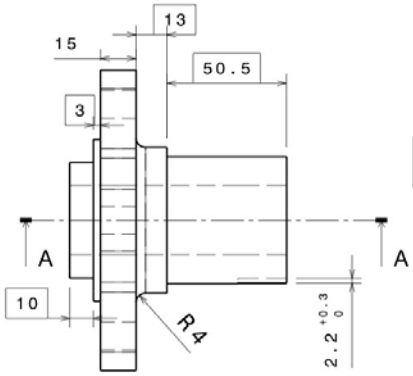

Vue de droite
Echelle : 1:2

90° entre chaque trou

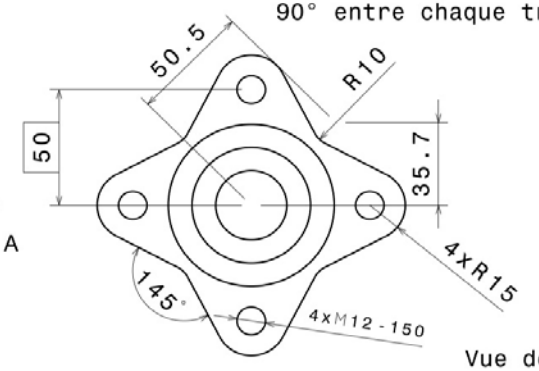

Vue de face
Echelle : 1:2

Ajustement k6 sur toute la longueur

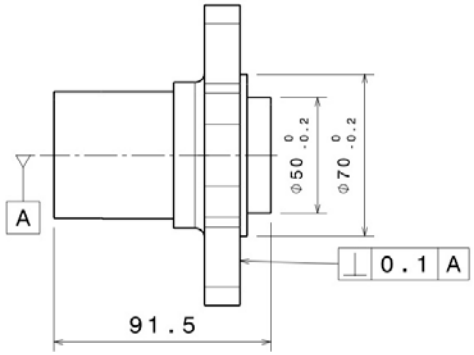

Vue de gauche
Echelle : 1:2

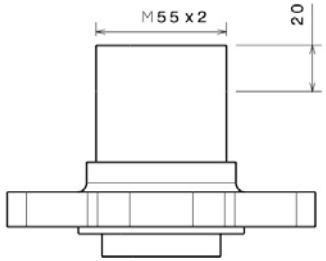

Vue de dessus
Echelle : 1:2

Tolérances générales ISO 2768 - mK

Taille A3		Ecurie Piston Sport Auto	
Dessiné par Clément Marie	Date 19/12/2016	Désignation Moyeu AV	
Coordonnées 06.04.42.02.69 clement.marie@ecl15.ec-lyon.fr		Quantité 2	Matériau Aluminium 7075 T6	Version v1.0
Plan vérifié par VPY		Echelle 1:2	N° plan 17B_L_001_MAV	Feuille 1/1

University	Ecole Centrale de Lyon			Back to BOM	**Car #**	81	**Part Cost**	$	2.62
System	Wheels, Wheel Bearings and Tires	Drawing :	FileLink1				**Qty**		1
Assembly	Front Hubs		**FileLink2**		**FileLink1**				
Part	Front speed wheel		**FileLink3**		**FileLink2**		**Extended Cost**	$	2.62
P/N Base	WT 02002				**FileLink3**				
Suffix	AA								
Details	To measure wheel's speed								

ItemOrder	Material	Use	UnitCost	Size1	Unit1	Size2	Unit2	Area Name	Area	Length	Density	Quantity	Sub Total
10	Steel, Mild		$ 2.25	0.156	kg			Round Area, 130mm diameter	1.33E-02	1.50E-03	7850	1	$ 0.35
												Sub Total	**$ 0.35**

ItemOrder	Process	Use	UnitCost	Unit	Quantity	Multiplier	Mult. Val.	Sub Total
10	Machining Setup, Install and Remove		$ 1.30	Unit	1		1	$ 1.30
20	Machining	Turning	$ 0.04	cm^3	8.1	Material - Steel	3	$ 0.97
							Sub Total	**$ 2.27**

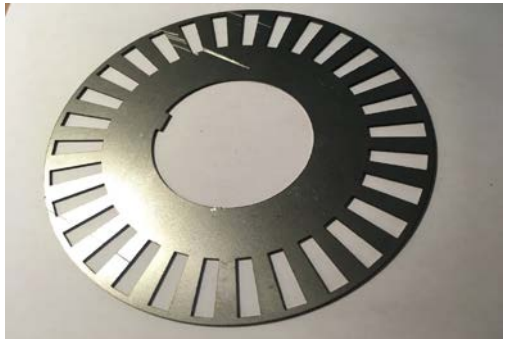

WT 02002

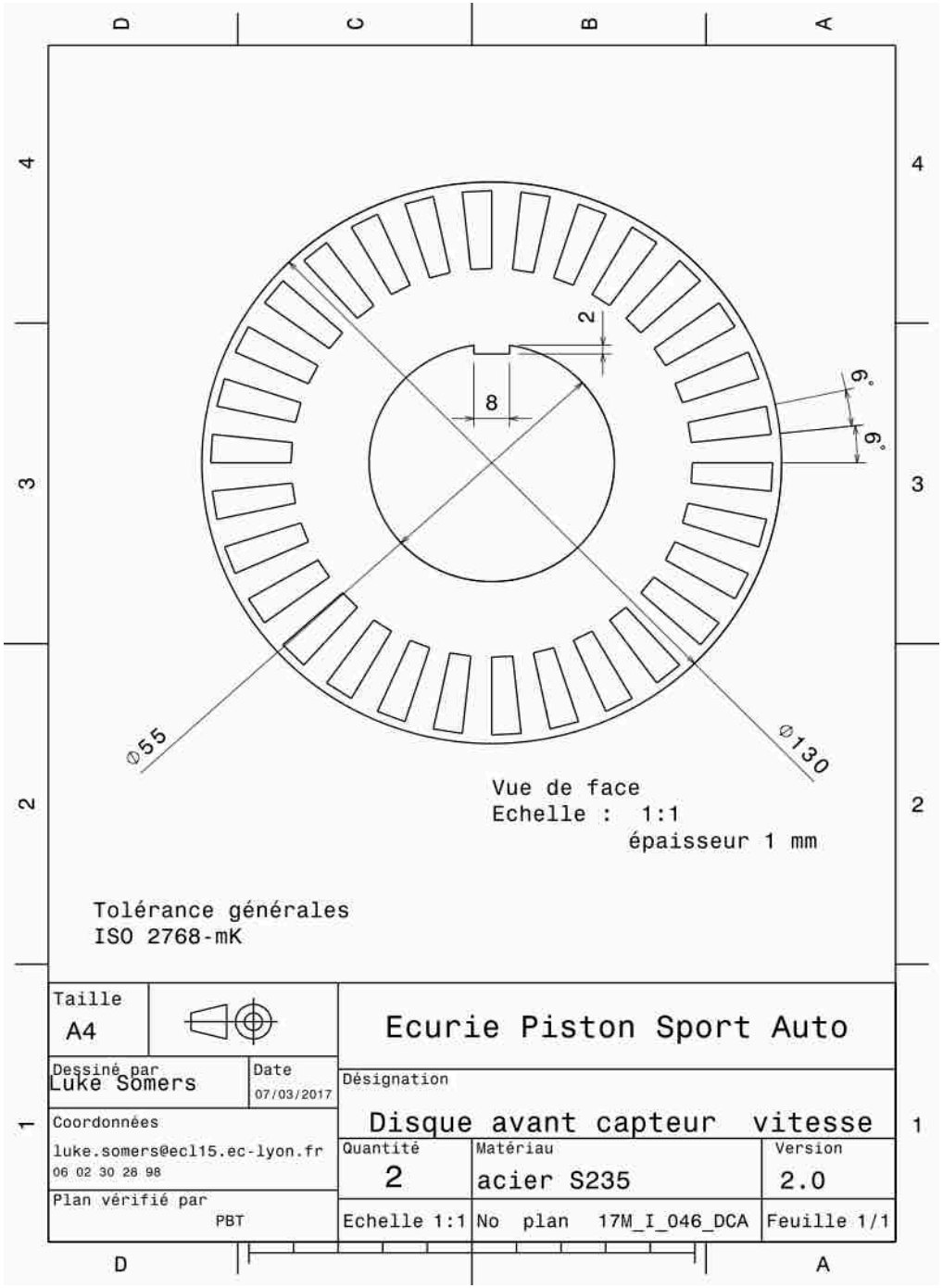
2
8
6°
6°
Ø55
Ø130
Vue de face
Echelle : 1:1
épaisseur 1 mm
Tolérance générales
ISO 2768-mK
Taille
A4
Ecurie Piston Sport Auto
Dessiné par
Luke Somers
Date
07/03/2017
Désignation
Disque avant capteur vitesse
Coordonnées
luke.somers@ecl15.ec-lyon.fr
06 02 30 28 98
Quantité
2
Matériau
acier S235
Version
2.0
Plan vérifié par
PBT
Echelle 1:1
No plan 17M_I_046_DCA
Feuille 1/1

University	Ecole Centrale de Lyon			Back to BOM	**Car #**	81	**Part Cost**	$	1.90
System	Wheels, Wheel Bearings and Tires	Drawing :	FileLink1				**Qty**		1
Assembly	Front Hubs		**FileLink2**		**FileLink1**				
Part	Speed wheel spacer		**FileLink3**		**FileLink2**		**Extended Cost**	$	1.90
P/N Base	WT 02003				**FileLink3**				
Suffix	AA								
Details	Identical at front and rear								

ItemOrder	Material	Use	UnitCost	Size1	Unit1	Size2	Unit2	Area Name	Area	Length	Density	Quantity	Sub Total
10	Steel, Mild		$ 4.20	0.036	kg			Round Area, 62mm diameter	3.02E-03	1.50E-03	7850	1	$ 0.15
												Sub Total	**$ 0.15**

ItemOrder	Process	Use	UnitCost	Unit	Quantity	Multiplier	Mult. Val.	Sub Total
10	Machining Setup, Install and Remove		$ 1.30	Unit	1		1	$ 1.30
20	Machining	Turning	$ 0.04	cm^3	3.72	Material - Steel	3	$ 0.45
							Sub Total	**$ 1.75**

WT 02003 WT 03003

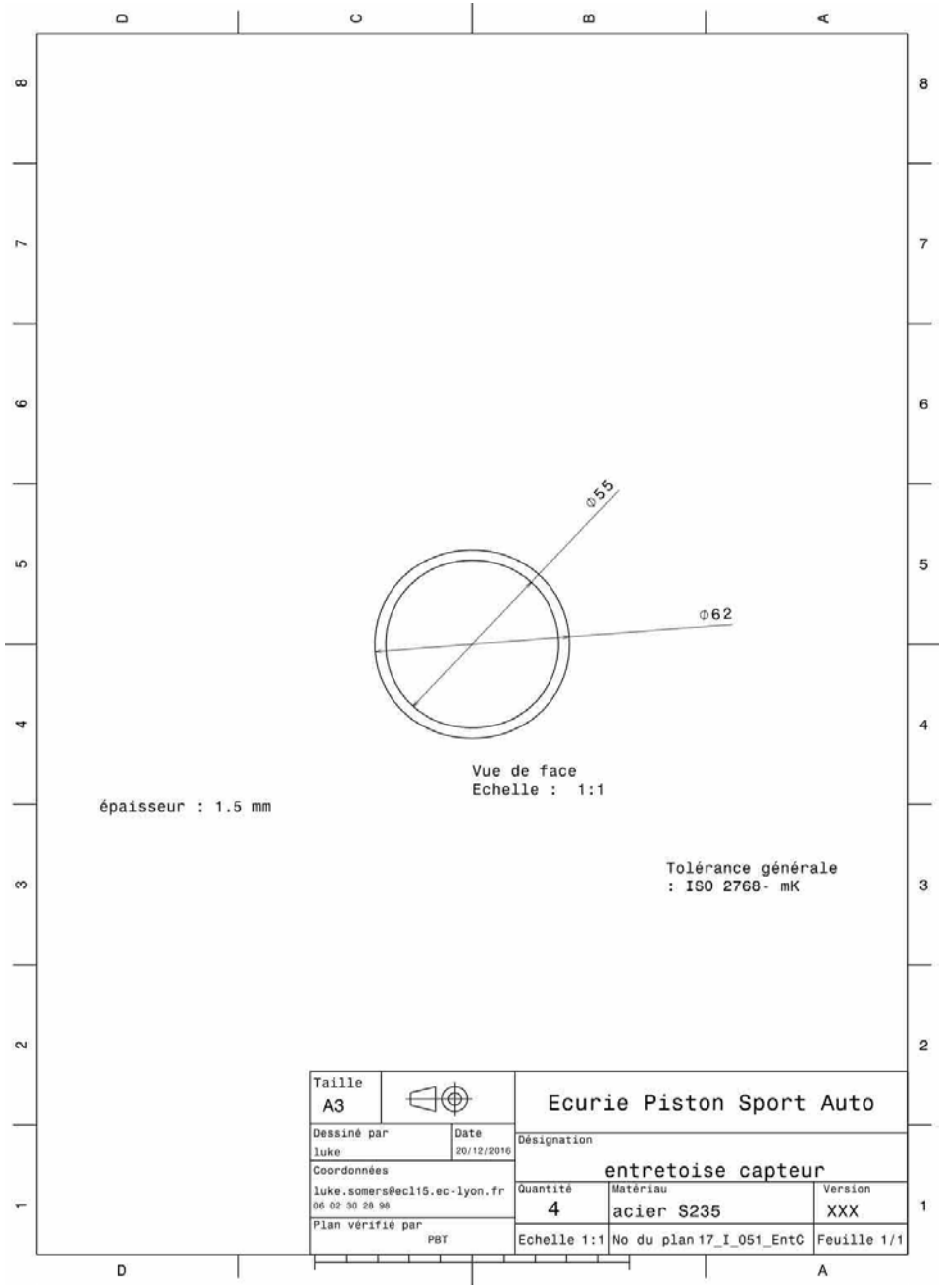

University	Ecole Centrale de Lyon	Back to BOM	**Car #**	81	**Asm Cost** $ 307.40
System	Wheels, Wheel Bearings and Tires				**Qty** 2
Assembly	Rear Hubs		**FileLink1**		
P/N Base	WT A0003		**FileLink2**		**Extended Cost** $ 614.80
Suffix	AA		**FileLink3**		
Details	Assembly composed of a hub and two parts to measure the wheel's speed				

ItemOrder	Part	Part Cost	Quantity	Sub Total
10	Rear Hub	$ 57.94	1	$ 57.94
20	Rear speed wheel	$ 2.23	1	$ 2.23
30	Speed wheel spacer	$ 1.90	1	$ 1.90
			Sub Total	**$ 62.07**

ItemOrder	Material	Use	UnitCost	Size1	Unit1	Size2	Unit2	Area Name	Area	Length	Density	Quantity	Sub Total
10	Wheel Bearing, Ball, Angular Contact	Wheel Bearings	$ 115.38	80	mm	13	mm					2	$ 230.76
20	Locknut/L.P.///Steel/	Bearing Nuts	$ 8.50	55	mm							1	$ 8.50
30	Adhesive	Wheel studs and hub assemble, cost included in process	$ -										$ -
												Sub Total	**$ 239.26**

ItemOrder	Process	Use	UnitCost	Unit	Quantity	Multiplier	Mult. Val.	Sub Total
10	Assemble, 1 kg, Interference	Bearings Assemble	$ 0.19	unit	2		1	$ 0.38
20	Assemble, 1kg, Loose	Speed wheel spacer assemble on the hub	$ 0.06	unit	1		1	$ 0.06
30	Assemble, 1kg, Loose	Speed wheel assemble on the hub	$ 0.06	unit	1		1	$ 0.06
40	Assemble, 1kg, Loose	Bearing nut assemble on the hub	$ 0.06	unit	1		1	$ 0.06
50	Liquid Applicator Gun	Wheel studs and hub assemble	$ 0.02	cm	30.16		1	$ 0.60
60	Assemble, 1 kg, Line-on-Line	Wheel studs and hub assemble	$ 0.13	unit	4		1	$ 0.52
70	Assemble,1kg, Line-on-Line	Locknut on hub	$ 0.13	Unit	1		1	$ 0.13
							Sub Total	**$ 1.81**

ItemOrder	Fastener	Use	UnitCost	Size1	Unit1	Size2	Unit2	Quantity	Sub Total
10	Stud, Grade 12.9	Wheel Studs	$ 1.07	12	mm	62	mm	4	$ 4.26
								Sub Total	**$ 4.26**

University	Ecole Centrale de Lyon		Back to BOM	**Car #**	81	**Part Cost**	$ 57.94
System	Wheels, Wheel Bearings and Tires	Drawing :	FileLink1			**Qty**	1
Assembly	Rear Hubs		**FileLink2**	**FileLink1**			
Part	Rear Hub		**FileLink3**	**FileLink2**		**Extended Cost**	$ 57.94
P/N Base	WT 03001			**FileLink3**			
Suffix	AA						
Details	Main part of the assembly. Inner grooves to hold the outboard tripod housing						

ItemOrder	Material	Use	UnitCost	Size1	Unit1	Size2	Unit2	Area Name	Area	Length	Density	Quantity	Sub Total
10	Aluminum, Premium		$ 4.20	3.366	kg			Round Area, 130mm diameter	1.33E-02	0.094	2712	1	$ 14.14
												Sub Total	**$ 14.14**

ItemOrder	Process	Use	UnitCost	Unit	Quantity	Multiplier	Mult. Val.	Sub Total
10	Machining Setup, Install and Remove		$ 1.30	Unit	1		1	$ 1.30
20	Machining	Turning	$ 0.04	cm^3	775.04	Material - Aluminium	1	$ 31.00
30	Machining Setup, Change		$ 0.65	Unit	1		1	$ 0.65
40	Machining	Turning	$ 0.04	cm^3	141.37	Material - Aluminium	1	$ 5.65
50	Machining Setup, Install and Remove		$ 0.65	Unit	1		1	$ 0.65
60	Machining	Milling	$ 0.04	cm^3	77.16	Material - Aluminium	1	$ 3.09
70	Machining Setup, Change		$ 0.65	Unit	1		1	$ 0.65
80	Machining	Milling	$ 0.04	cm^3	0.39	Material - Aluminium	1	$ 0.02
90	Threading, Internal (machining)	For wheel studs	$ 0.10	cm	6	Material - Aluminium	1	$ 0.60
100	Threading, External (machining)	For locknut	$ 0.10	cm	2	Material - Aluminium	1	$ 0.20
110	EDM - Wire	For outboard housing	$ 0.20	cm	7.9	Material - Aluminium	1	$ 1.58
							Sub Total	**$ 43.81**

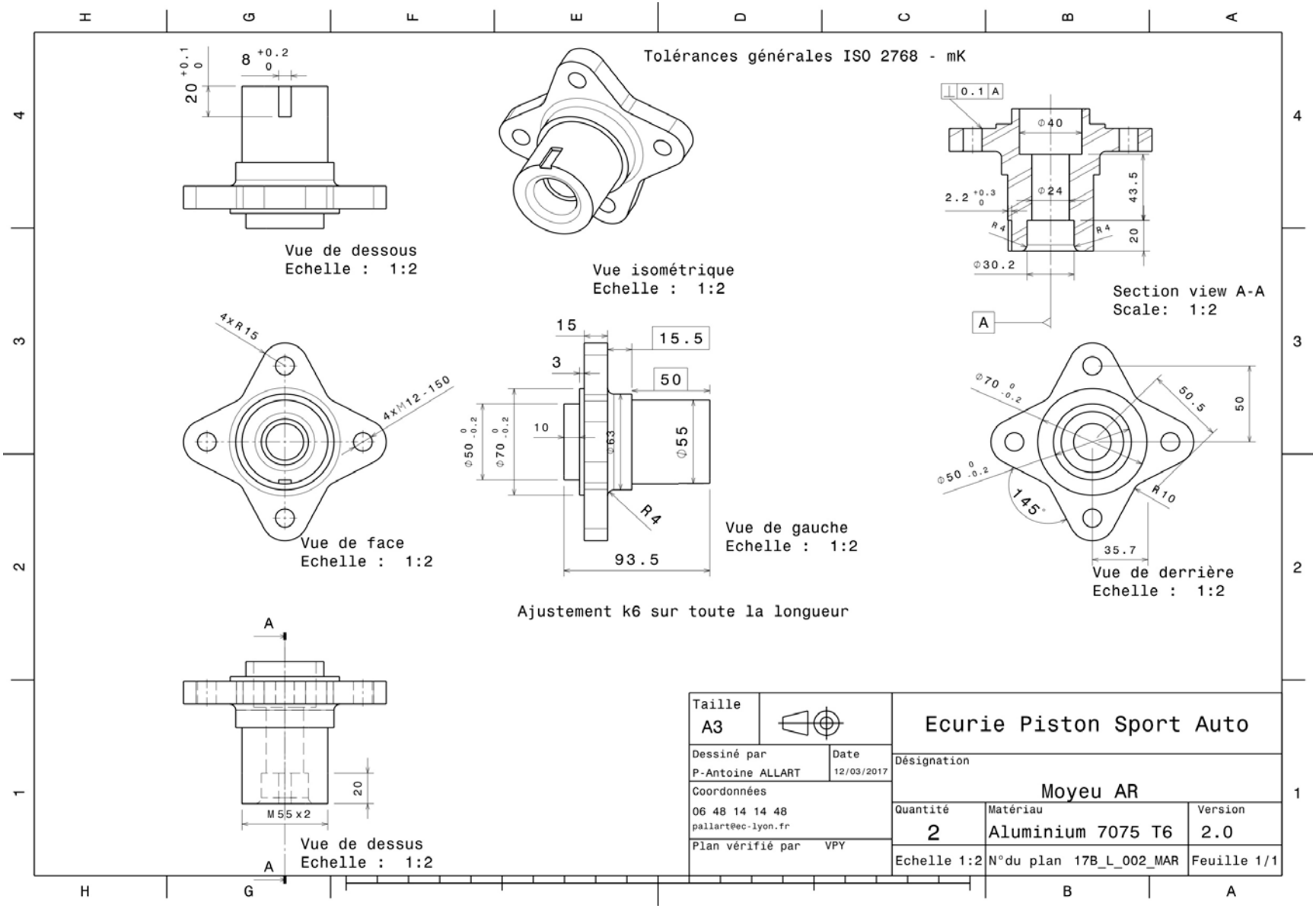
Tolérances générales ISO 2768 - mK
Vue de dessous
Echelle : 1:2
Vue isométrique
Echelle : 1:2
Section view A-A
Scale: 1:2
Vue de face
Echelle : 1:2
Vue de gauche
Echelle : 1:2
Vue de derrière
Echelle : 1:2
Ajustement k6 sur toute la longueur
Vue de dessus
Echelle : 1:2
Taille
A3
Dessiné par
P-Antoine ALLART
Date
12/03/2017
Coordonnées
06 48 14 14 48
pallart@ec-lyon.fr
Plan vérifié par VPY
Ecurie Piston Sport Auto
Désignation
Moyeu AR
Quantité
2
Matériau
Aluminium 7075 T6
Version
2.0
Echelle 1:2
N°du plan 17B_L_002_MAR
Feuille 1/1

University	Ecole Centrale de Lyon			Back to BOM	**Car #**	81	**Part Cost**	$	2.23
System	Wheels, Wheel Bearings and Tires	Drawing :	FileLink1				**Qty**		1
Assembly	Rear Hubs		**FileLink2**		**FileLink1**				
Part	Rear speed wheel		**FileLink3**		**FileLink2**		**Extended Cost**	$	2.23
P/N Base	WT 03002				**FileLink3**				
Suffix	AA								
Details	To measure wheel's speed								

ItemOrder	Material	Use	UnitCost	Size1	Unit1	Size2	Unit2	Area Name	Area	Length	Density	Quantity	Sub Total
10	Steel, Mild		$ 2.25	0.100	kg			Round Area, 104mm diameter	8.49E-03	1.50E-03	7850	1	$ 0.23
												Sub Total	**$ 0.23**

ItemOrder	Process	Use	UnitCost	Unit	Quantity	Multiplier	Mult. Val.	Sub Total
10	Machining Setup, Install and Remove		$ 1.30	Unit	1		1	$ 1.30
20	Machining	Turning	$ 0.04	cm^3	5.86	Material - Steel	3	$ 0.70
							Sub Total	**$ 2.00**

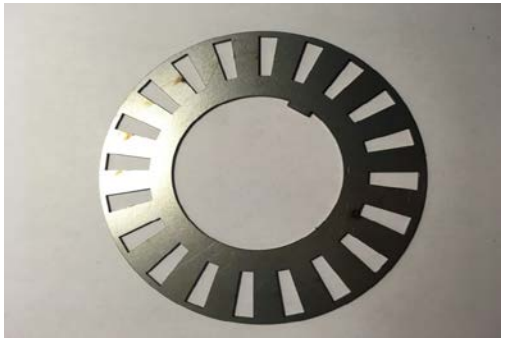

WT 03002

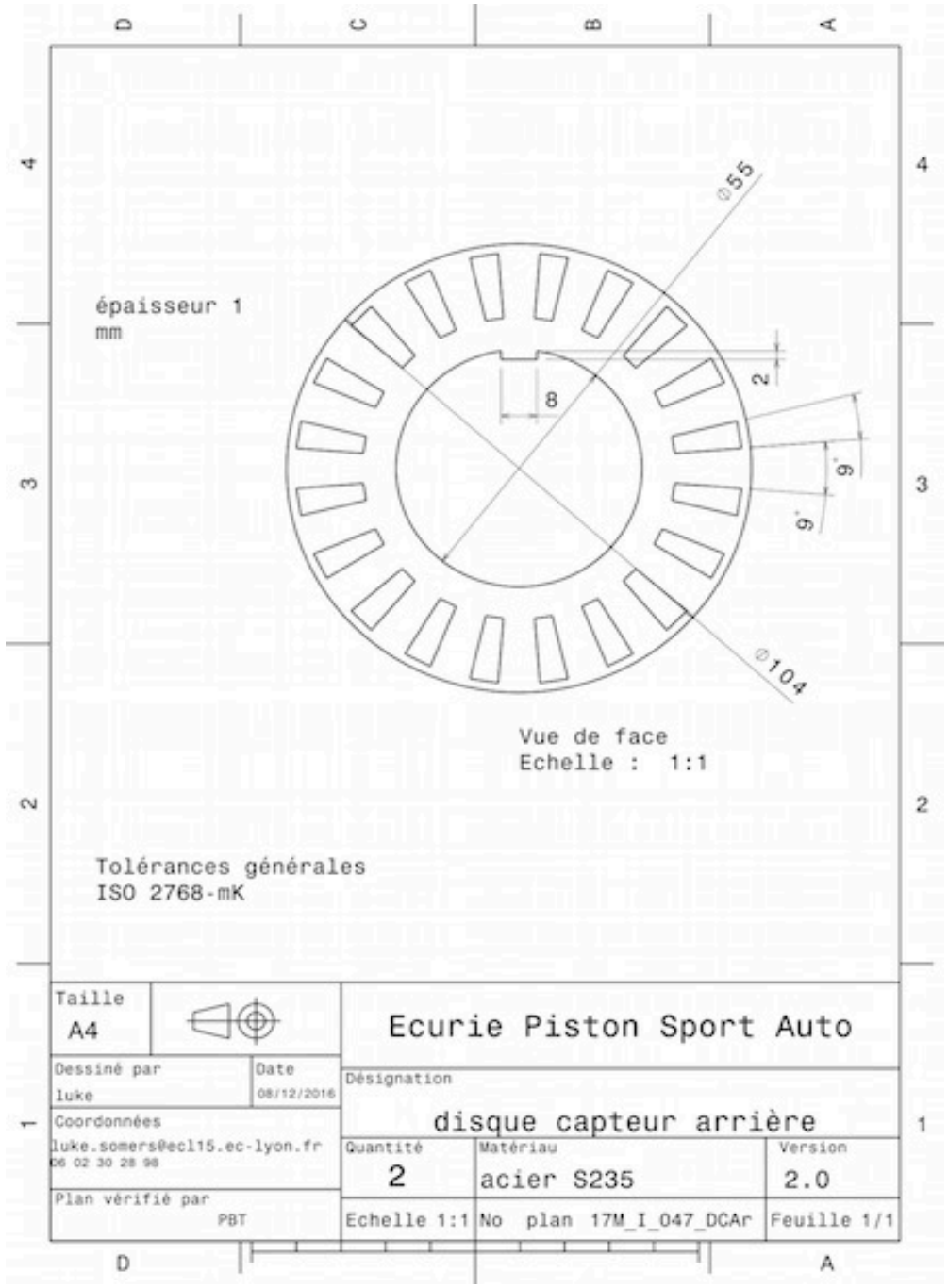
épaisseur 1
mm
⌀55
8
2
9°
9°
⌀104
Vue de face
Echelle : 1:1
Tolérances générales
ISO 2768-mK
Taille
A4
Ecurie Piston Sport Auto
Dessiné par
luke
Date
08/12/2016
Désignation
disque capteur arrière
Coordonnées
luke.somers@ecl15.ec-lyon.fr
06 02 30 28 98
Quantité
2
Matériau
acier S235
Version
2.0
Plan vérifié par
PBT
Echelle 1:1
No plan 17M_I_047_DCAr
Feuille 1/1

University	Ecole Centrale de Lyon			Back to BOM	**Car #**	81	**Part Cost**	$	1.90
System	Wheels, Wheel Bearings and Tires	Drawing :	FileLink1				**Qty**		1
Assembly	Rear Hubs		**FileLink2**		**FileLink1**				
Part	Speed wheel spacer		**FileLink3**		**FileLink2**		**Extended Cost**	$	1.90
P/N Base	WT 03003				**FileLink3**				
Suffix	AA								
Details	Identical at front and rear								

ItemOrder	Material	Use	UnitCost	Size1	Unit1	Size2	Unit2	Area Name	Area	Length	Density	Quantity	Sub Total
10	Steel, Mild		$ 4.20	0.036	kg			Round Area, 62mm diameter	3.02E-03	1.50E-03	7850	1	$ 0.15
												Sub Total	**$ 0.15**

ItemOrder	Process	Use	UnitCost	Unit	Quantity	Multiplier	Mult. Val.	Sub Total
10	Machining Setup, Install and Remove		$ 1.30	Unit	1		1	$ 1.30
20	Machining	Turning	$ 0.04	cm^3	3.72	Material - Steel	3	$ 0.45
							Sub Total	**$ 1.75**