texense
sensors by TEXYS

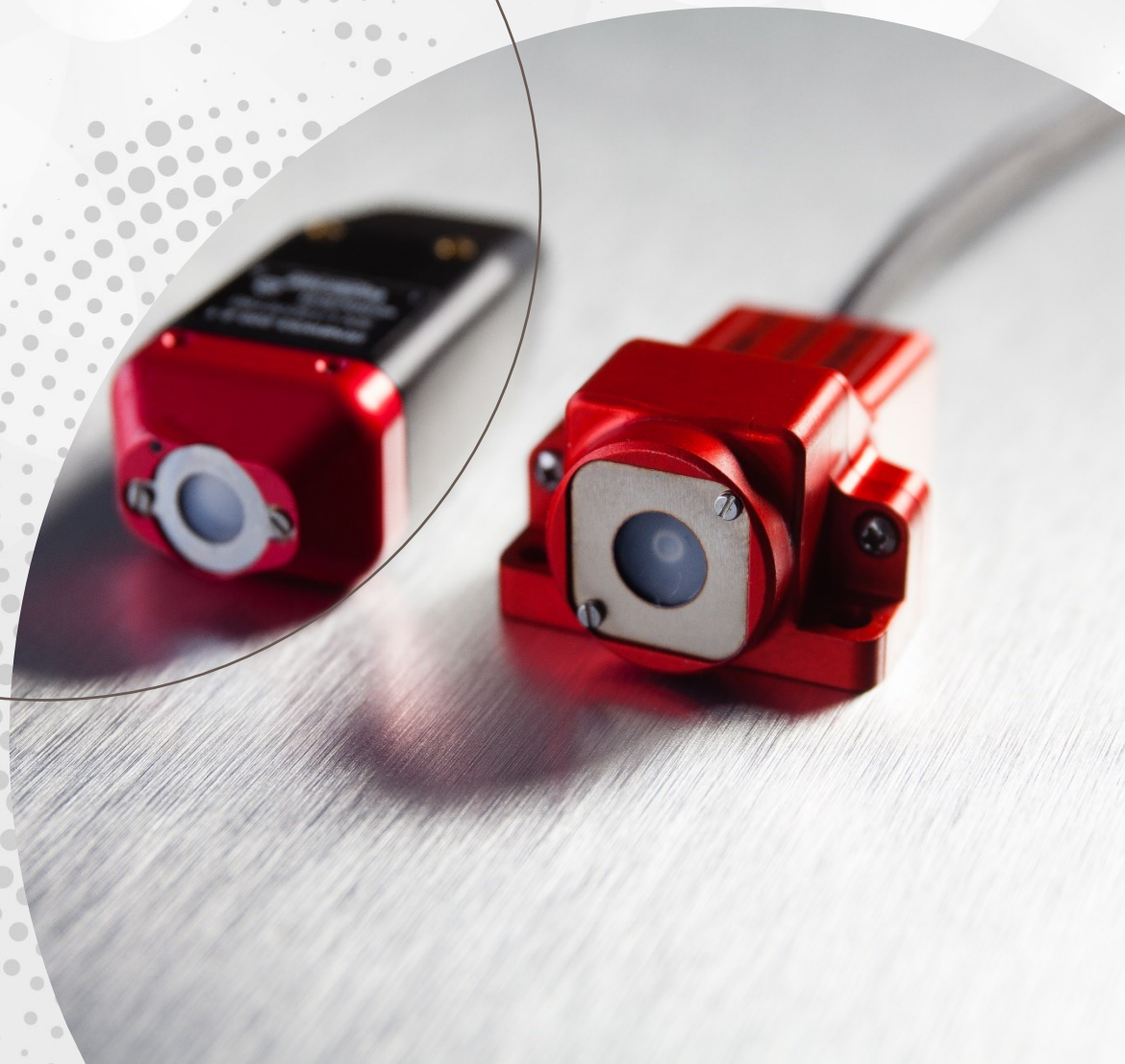

TEXENSE SENSORS

for embedded measurements
and monitoring of mobile equipment

texys GROUP

CHAPTER 1

Who are we ?

TEXYS HISTORY AND CORE BUSINESS

TEXYS was founded 20 years ago by Etienne Deméocq, former Head of Electronics at **Ligier Formula 1** Team later **Prost Grand Prix**, and was developed commercially across the globe with his business partner, Philippe Leuwers.

TEXYS is a supplier of high technology sensors and development projects to leading companies in their field of expertise:

- **Motorsport**, from Junior Series to NASCAR ™, Indycar ™ and World Championships (Formula 1 ™, Moto GP ™, Endurance, Rally, etc.)
- **Aeronautics** and **Aerospace**
- **Automotive** industry (Manufacturers, OEMs, Tier 1 Suppliers)
- **Marine** and **Shipbuilding**
- **Railway** industry

TEXENSE® range of products includes innovative patented solutions.

TEXYS Group launched in September 2019, **H2 MOTRONICS**, an external R&D office for advanced research and dedicated customer projects.

OPTEL-THEVON and **LIGHT GUIDE SOLUTIONS** (LGS) have been absorbed by TEXYS Group early in 2020. Both companies, now full subsidiaries of TEXYS Group are experts in optical fiber technology: accurate high speed measurement for OPTEL-THEVON, and Fiber Bragg Grating (FBG) for LGS by TEXYS.

TEXENSE®, Services & Applications

Specialists in contactless infrared temperature measurement, TEXYS provide a tailored solution to suit any installation and emissivity, offering single, multipoint and wireless IR measurement.

Market leading accelerometers, gyroscopes, inertial modules and aerodynamics sensors, which combine great reliability, accuracy and packaging.

Dedicated strain gauging fitting facilities **(in France and in the U.S.A.).**

Different technologies available for many types of applications.

Texys has achieved ISO9001 certification, thanks to the implementation of numerous quality management principles, including strong customer focus, management motivation and commitment, process approach and continuous improvement.

CHAPTER 2

Our Know-How

Embedded applications

Fluid Temperature
PT 100-1000
& NTC

Wireless Systems
Tyre temperature sensors, thermocouple amplifiers, air pressure sensors.

Thermocouple & PT Amplifiers

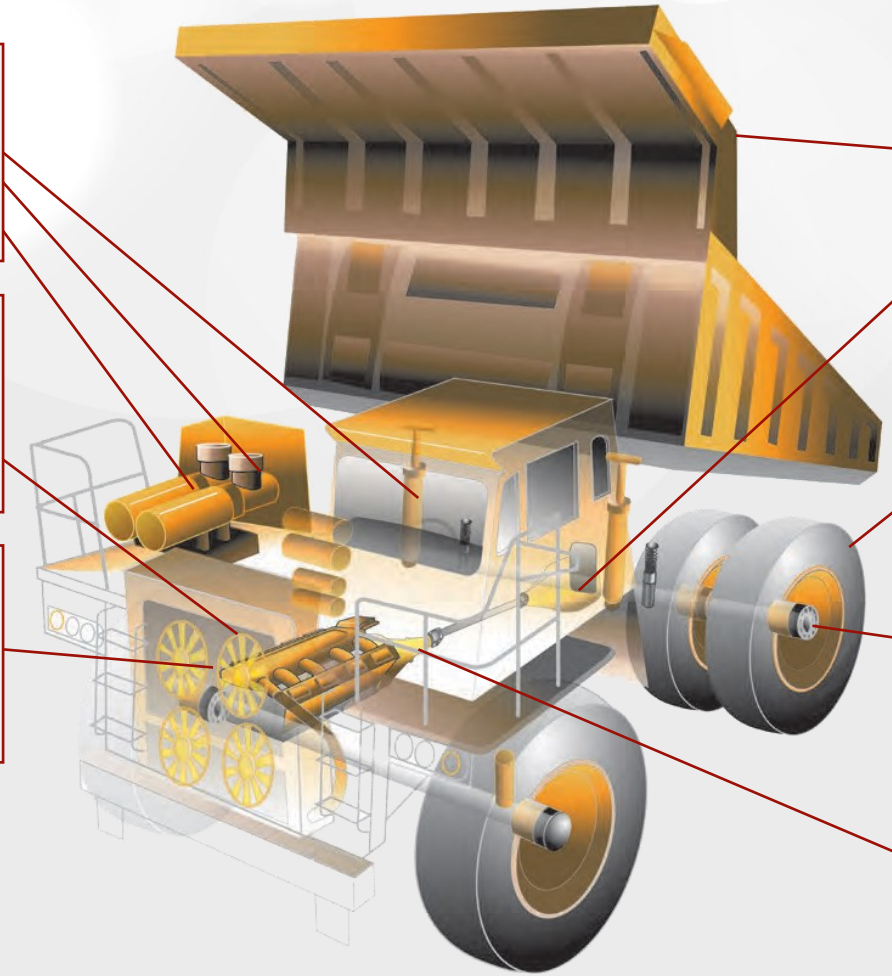

Inertial Sensors
Accelerometers, Gyros, Inertial boxes

Tyre Temperature
Contactless infrared temperature measurement - many options from single to multi-point

Brake Temperature
Contactless infrared temperature measurement

Force Measurement
Torque sensors & strain gauge bonding

Thermocouple amplifiers

TEXENSE thermocouple amplifiers have been designed and developed to simplify wiring harness installations, helping to eliminate potential electrical problems and save on costs (replacement of slip rings for instance).

Main application:

Trucks, haul truck, loaders, excavators, dozers, and harvesters ….

Thermocouple amplifiers

Different junctions are available, the K type is the most common, but we can provide other types such as J, T and R. Both models are available in ranges from -100°C to +1800°C and protection from IP63 to IP67.

texense sensors by TEXYS

Thermocouple conditioners – Selection chart

Thermocouple Amplifiers	Application	Temperature range	# of Channels	Accuracy	Output	Type	Sampling Frequency	Power Supply	Dimension	Connection
THAK	T° Signal Conditioning	50°C to 200°C 0 to 1250°C	1	± 0,5% FS	Analog	K, J, T, …	16Hz Up to 10KHz	5 - 16V	32,5x19x10mm	Wire
THAB		-100 to 1300°C	1	0,14% FS	Analog	K	5Hz	10-30V	50x12x8mm	Wire
THN		- 100 to 400°C 0 to 1250°C	1	TBA	Analog	K, J, T, …	5Hz	6 - 16V 12 - 33V	Plastic housing 37x20x10mm Aluminium housing 32.5x19x10mm	Wire
THNF-A / C		-100 to 1800°C	1	± 0,25% FS	Analog / CAN	K, J, T, …	**1KHz**	**6 - 30V**	38.8x18.7x10mm	Wire
THNF4x/8x		-100 to 1800°C	4 / 8	± 0,25% FS	CAN	K, J, T, …	**1KHz**	6 - 25V	38.8x18.7x10mm	Military Connector
THNM-16x		-100 to 1370°C	16	± 0,2% FS	CAN	K	50Hz	6 – 36V	105x44x34 mm	Military Connector
THN2x/4x-WS		-100 to 1250°C	2 / 4	±1°C FS<400°C 0,25%FS FS>400°C	CAN	K	10 Hz	Batt : 3,6V	2ch: 61x56x18mm 4ch: 67x51x20mm	**Wireless** 868/902/920MHz

Temperature sensors – Selection chart (non exhaustive list)

T° Probe and Amplifiers	Application	Range	# of Channels	Accuracy	Output Voltage	Sampling	Power Supply	Dimension	
TS-100/150°C	Liquid and Air T°	0 to 100°C -50 to 150°C	1	2% FS	0-5V	N/A	5 – 16V	6mm threaded + 4mm unthreaded 8mm threaded + 6mm unthreaded	
PT-100/1000	Liquid T°	-50 to 200°C	1	Class A for PT1000 Class 1/3 for PT100	Ω	N/A	Resistive-element	6mm threaded + 4mm unthreaded 8mm threaded + 6mm unthreaded	
PT-BC	Surface T°	-50 to 300°C	1	Class A for PT1000 Class B for PT100	Ω	N/A	Resistive-element		
APTAB-Range	PT amplifier		1	PT100 / PT1000	0-5V	N/A	6 -30 V	50x12x8 mm	

IR T° Sensors	Application	Range	# of Channels	Accuracy	Output Voltage	Sampling	Power Supply	Dimension	Wireless
IRN3	Track / Road T°	-40 to 100°C	1	1,5 to 5% FS	0 -3 or 0-5V	20Hz	5,5 to 16V	M12X40mm	
IRN4/8	Tyre T°	-20 to 200°C	4/8	+/- 1% FS		10Hz	6 to 16V	31x11x17mm	YES
INF(V/T)-150/200	Tyre T°	0 to 150°C 0 to 200°C	1	2% FS	0 – 5V		6 to 16V	V type : 21x17x11mm T type : M12 – 32mm	
INFTS-1000	High T°	up to 1000°C	1	1% FS	0 – 5V	Sampling frequency is 50Hz at 100ms response time of cells at 50 Hz	5 to 16V	31x11x17mm	
IRN-RC	Tyre T°	-20 to 200°C	3 to 8 (in line)			200Hz	6 to 16V	max 600 mm	
IFbN	Extrem Environment T°	50 to 1200°C	1	2% FS	0 -5V		5 to 30V		
MIB	Thermal Camera	0 to 200°C	Matrix 84x84 pts	1 to 2% FS	CAN	100Hz	6 to 30V	40x30,5,18,5mm	

Sensors for Monitoring Asphalt Pavements

IRN3 Series Infrared Sensor
Monitoring temperature of asphalt in road construction. In addition, track surface for racing applications

TEXENSE® Tyre Pressure Monitoring Systems

Initially developed for the demanding environment of motorsport (high speeds and operating temperatures), this system can be adapted to many other industrial applications requesting pressure monitoring.

Fully configurable with the handheld, the system offers tyre performances monitoring with key parameters :

- Inner liner temperature
- Rim temperature
- Pressure
- Temperature
- Relative humidity

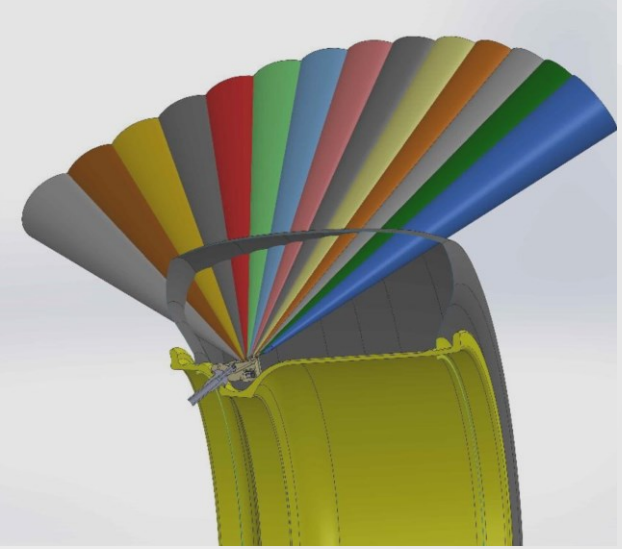

TEXENSE® Wireless Systems

THN2x-WS
- Wireless 2ch thermocouple amplifier
- Texense secure wireless tri-band RF
- Pairs to GENWM receiver
- K type -100 to +1250°C

IRN8-WS4
- Wireless 8ch tyre temperature sensor
- Award winning design
- Texense secure wireless tri-band RF
- Pairs to GENWM receiver
- 0 - 200°C

THN4x-WS
- Wireless 4ch thermocouple amplifier
- Texense secure wireless tri-band RF
- Pairs to GENWM receiver
- K type -100 to +1250°C

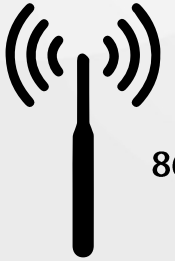

868, 902 or 920 MHz

GenWM
- Generic master receiver
- CAN output
- Auto-tuning tri-band RF
- Can pair with up to 22 wireless sensors
- 868/902/920MHz
- Sampling capability up to 200Hz

ANA-WS
- 2ch analog to wireless hub
- Texense secure wireless tri-band RF
- Pairs to GENWM receiver
- Sampling capability up to 200Hz

WTS
- Torque sensor
- Can be used on driveshafts, propshaft, IPS etc.
- Pairs to GENWM receiver
- Sampling capability up to 200Hz

IRN-RC-WS
- Flexible IR tyre temp sensor
- 3-8 sensing heads with adjustable distance
- Texense secure wireless tri-band RF
- 0 - 200°C

Inertial sensors

Accelerometers, Gyros & Inertial Boxes

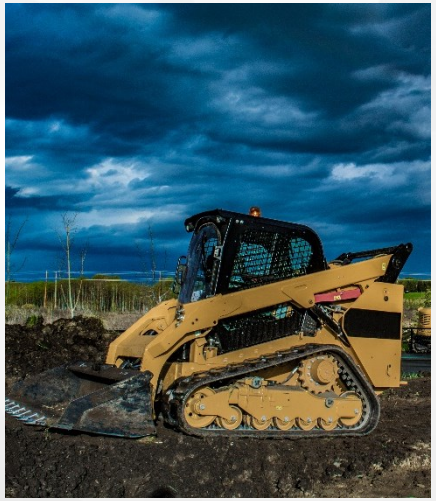

- Platform and vehicle leveling
- Measuring angle on moving vehicles in harsh environments
- Excavators
- Mining vehicles
- Skid-steers
- Mobile cranes

Inertial Sensors

Accelerometers, Gyros, Lean Angle & Inertial boxes

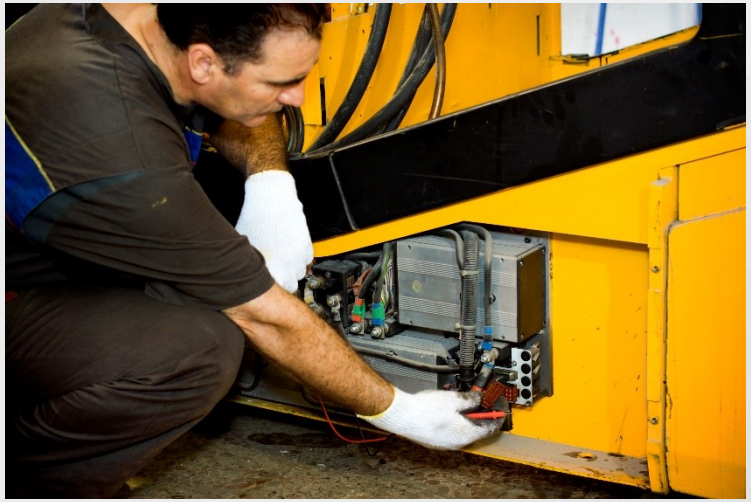

texense sensors by TEXYS

Accelerometers / Inertial sensors - Selection chart

Inertial Sensors	Application	Range	Axis	Type	Output	Sensitivity	Accuracy	Frequency	Power Supply	Dimension
AC-CAP - PRO	Acceleration	+/- 2G to +/- 200G	1 to 3 axis	Capacitive	Analog 0 – 5V	10 to 1000 mV/G	1 to 2% FS	1000Hz (-3dB)	5 – 30V	38x22x18 mm M12 connector
AC-GAS	Acceleration	up to 10g	1 or 2 axis	Gas	Analog 0 – 5V	2000to 200 ± 2% mV/G		20Hz	5 - 24V	25x16x8 mm
GYRP	Gyro	± 50, ± 100, ± 150 °/s	1	N/A	Analog 0 – 5V	40, 20, 13.3 mV/° /s	2% FS	50Hz	5 – 16V	25x16x8 mm
GYRN3-S	Gyro	± 50, ± 100, ± 150 °/s	3	N/A	Analog 0 – 5V	40, 20, 13.3 mV/° /s	2% FS	40Hz	5 – 16V	30x21,5x11 mm
IB3	Inertial Box Acceleration + Gyro		3 axis Accel	Capacitive + Gas	Analog 0 – 5V			Accel : 20 to 100Hz Gyro : 50Hz	5 – 16V	40,8x23,5x20,5 mm
IB4	Inertial Box Acceleration + Gyro									
IB6	Inertial Box Acceleration + Gyro		3 axis Accel 3 axis Gyro	Capacitive + Gas	Analog 0 – 5V			Accel : 20 to 100Hz Gyro : 50Hz	5 – 16V	36x26,5x25,5 mm
IB6-CAN	Inertial Box Acceleration + Gyro		3 axis Accel 3 axis Gyro	Capacitive + Gas	CAN			Accel : 20 to 100Hz Gyro : 50Hz	5 – 16V	36x26,5x25,5 mm
RAD-6	Lean Angle yaw or pitch		3 axis Accel 3 axis Gyro	Gas	CAN				6 – 30V	32x42,5x12 mm
VDYN6-SA										

Test and validation - of Electric, Hybrid and Hydrogen vehicle

Hall effect Current Sensor with analog output

Analog output		
Range	-170 to +170	A
Accuracy	<1	% FS
Output voltage	0.5V at -170A 2.5 V at 0A 4.5V at +170A	
Output impedance	47	Ω
Common		
Supply Voltage	7 to 32	V
Supply Current (under 10V supply)	25	mA
Overall dimension	39.3 x 25.1 x 53.7	mm
Weight (with 1m cable)	25	g
Material	Aluminum	
Box protection	IP64	
Vibration test	20Gpp5'	
Shock	500	G
Operating Temp	-20 to +85	°C
Storage Temp	-20 to +125	°C

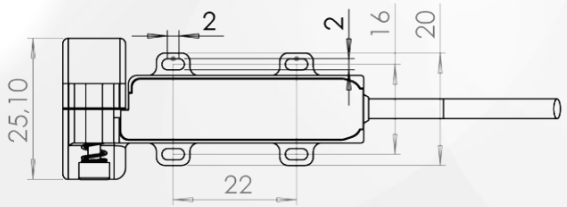

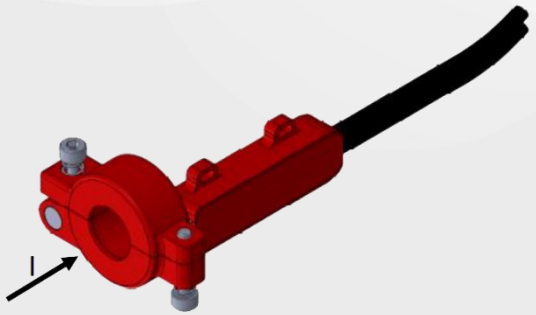

Multiple signal conversion solutions

- 24 to 12V power supply converter
- Analogue (0-5V / 0-12V) to 4-20mA interface
- Analog to CAN
- CAN to Analogue

Embedded Solutions for Torque Measurement - Vehicle Test and Validation

Optical Speed Sensors

OPTEL TEXYS PARIS

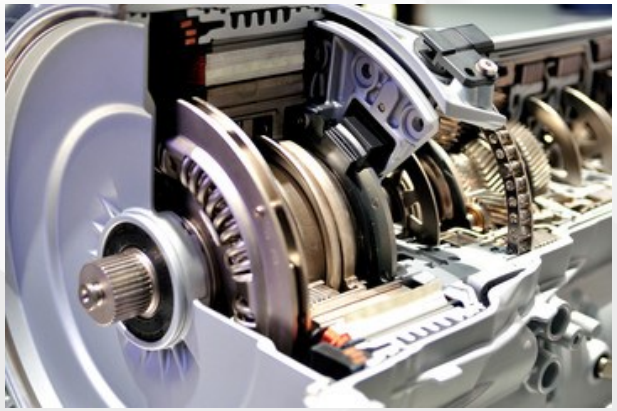

A combination of electronic **amplifier with near-IR emission and reception** and **small size optical fibre probes** providing high resolution detection, high speed signal, accurate output signal for the analysis of rotating machines:

- **Torsional Vibration** acquisition on electrical and hybrid Engines, accessories, powertrain, rotating machines
- **Torque measurement** by detecting the angular position Pumps and Compressor, shaft-motion

Optical Speed Sensor		Frequency Range	Detection Distance	Power Supply	Current Consumption	Rise / Fall Time	Standard Operating Temperature	Amplifier Dimension
152 G7		0 – 260 KHz	1 mm < D < 5 mm (Black and White stripes)	9 – 30 Vcc	< 80 mA	RT = 50 nanosec. FT ≤ 0.5 microsec.	Amplifier: -10/70°C Probes: -50/120°C	14X48 mm 4 x holes Ø 3mm
152 M		0 – 1 MHz	1 mm < D < 10 mm (Black and White stripes)	9 – 30 Vcc	120 mA	RT < 35 nanosec. FT < 35 nanosec.	Amplifier: -10/70°C Probes: -50/120°C	14X48 mm 4 x holes Ø 3mm

Bolted Joint Control

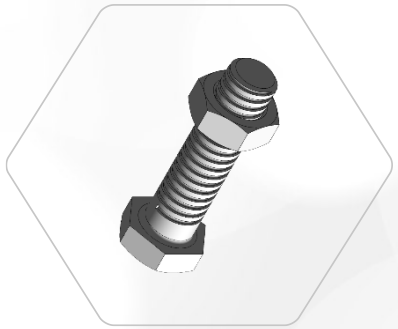

Clamp Load Fastener	Type		Application	Range	Axis	Output	Sampling Frequency	Power Supply	Protection	Operating Temp
TM-FAST-TH	External Amplifier	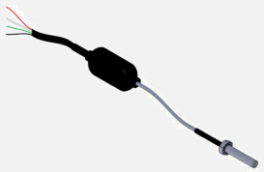	Assembly Validation Load Monitoring Tightening Control Contactless maintenance	M4 to M27	Axial Traction Force	0 – 5V	0 – 15 KHz	6 to 16V 4 mA	IP66	-20 to +100°C
TM-FAST-W	Wireless	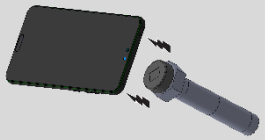								
TM-FAST-MC	Magnetic cable									

Why choose TEXENSE sensors?

20 years of Motorsport experience at the service of various industries

- Bespoke products designed for harsh and demanding environment applications
- Reactivity, flexibility, fast delivery
- Tailored and customized sensors
- Wireless solutions for easy installation – retrofit of existing systems
- A range of products ideal for vehicle development phases, test benches and for small/medium size series production

THANK YOU

Texys International

Romain Fernand (r.fernand@texense.com), Sales Engineer
Ivan Tattier (i.tattier@texysgroup.com), Head of Business Development

+33 386 212 718

Z.A. des Chamonds, 16 rue Edouard Branly
58640 Varennes-Vauzelles
France

www.texense.com
www.texysgroup.com