Ecurie Piston Sport Auto

ÉCOLE CENTRALE LYON

COST REPORT

EPSA TEAM CAR # 81

Cost Summary Basics

for: **Ecole Centrale de Lyon**
Car # 081

Area Totals	Materials	Processes	Fasteners	Tooling	Total
Brake System	$ 973.05	$ 153.84	$ 6.30	$ 0.67	$ 1 133.86
Engine & Drivetrain	$ 2 919.48	$ 1 504.61	$ 73.30	$ 73.42	$ 4 569.77
Frame & Body	$ 1 594.50	$ 2 360.46	$ 16.83	$ 126.60	$ 4 098.39
Instruments & Wiring	$ 1 107.52	$ 313.50	$ 3.37	$ 8.00	$ 1 432.39
Miscellaneous, Fit & Finish	$ 171.17	$ 314.84	$ 11.08	$ 17.75	$ 514.84
Steering System	$ 109.49	$ 141.43	$ 3.73	$ 11.01	$ 265.66
Suspension & Shocks	$ 1 778.92	$ 1 383.42	$ 19.76	$ 67.34	$ 3 249.44
Wheels & Tires	$ 1 950.80	$ 321.60	$ 60.32	$ -	$ 2 332.72
Total Vehicle	$ 10 604.93	$ 6 493.70	$ 194.69	$ 304.79	$ 17 597.07

Composition for total vehicle:

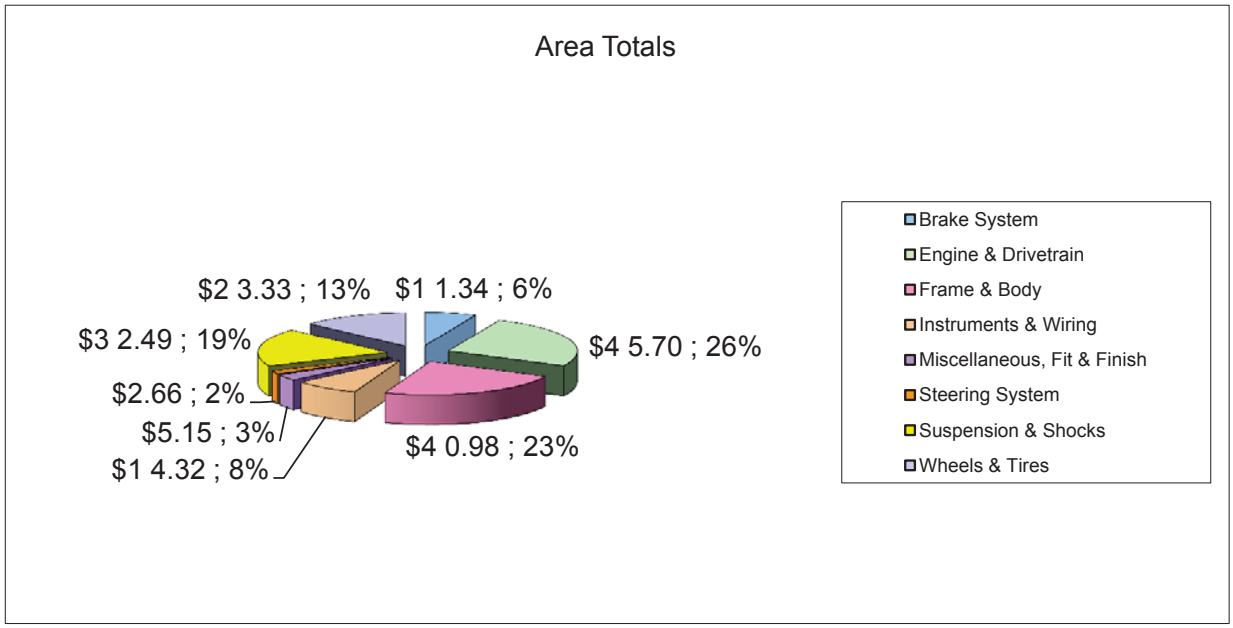

University	Ecole Centrale de Lyon
Competition Code	FSAEI
Year	14
Car #	081

Total Vehicle Cost	$ 17,597.07

Line Num.	Area of Commodity	Asm/Prt #	Rev. Lvl.	Asm	Component	Description	Unit Cost	Quantity	Material Cost	Process Cost	Fastener Cost	Tooling Cost	Total Cost	Details Page Number
1	Brake System	BR A0001	AA		Front Brake Rotor		$ 3.88	2	$ -	$ 3.22	$ 0.66	$ -	$ 7.76	10
2	Brake System	BR 01001	AA	Front Brake Rotor	Brake Rotor		$ 6.03	2	$ 1.33	$ 4.70	$ -	$ -	$ 12.06	11
3	Brake System	BR 01002	AA	Front Brake Rotor	Brake Shrink Disc		$ 7.63	2	$ 1.89	$ 5.74	$ -	$ -	$ 15.26	12
4	Brake System	BR 01003	AA	Front Brake Rotor	Brake Caliper		$ 83.00	2	$ 83.00	$ -	$ -	$ -	$ 166.00	14
3	Brake System	BR 01004	AA	Front Brake Rotor	Brake pad		$ 0.96	4	$ 0.96	$ -	$ -	$ -	$ 3.84	15
4	Brake System	BR 01005	AA	Front Brake Rotor	Brake Rotor Button		$ 1.35	12	$ 0.02	$ 1.33	$ -	$ -	$ 16.20	16
5	Brake System	BR A0002	AA		Rear Brake Rotor		$ 4.33	2	$ -	$ 3.59	$ 0.74	$ -	$ 8.66	17
6	Brake System	BR 02001	AA	Rear Brake Rotor	Brake Rotor		$ 6.03	2	$ 1.33	$ 4.70	$ -	$ -	$ 12.06	18
7	Brake System	BR 02002	AA	Rear Brake Rotor	Brake Shrink Disc		$ 7.63	2	$ 1.89	$ 5.74	$ -	$ -	$ 15.26	19
6	Brake System	BR 02003	AA	Rear Brake Rotor	Brake Caliper		$ 83.00	2	$ 83.00	$ -	$ -	$ -	$ 166.00	20
6	Brake System	BR 02004	AA	Rear Brake Rotor	Brake pad		$ 0.96	4	$ 0.96	$ -	$ -	$ -	$ 3.84	21
8	Brake System	BR 02005	AA	Rear Brake Rotor	Brake Rotor button		$ 1.35	12	$ 0.02	$ 1.33	$ -	$ -	$ 16.20	22
9	Brake System	BR A0003	AA		Brake Line		$ 458.05	1	$ 395.83	$ 58.05	$ 3.50	$ 0.67	$ 458.05	23
10	Brake System	BR 03001	AA	Brake Line	Brake reservoir tab		$ 2.06	1	$ 0.01	$ 2.05	$ -	$ -	$ 2.06	25
11	Brake System	BR 03002	AA	Brake Line	Brake reservoir mount		$ 2.07	1	$ 0.01	$ 2.06	$ -	$ -	$ 2.07	26
12	Brake System	BR 03003	AA	Brake Line	Master Cylinder		$ 97.00	2	$ 97.00	$ -	$ -	$ -	$ 194.00	27
13	Brake System	BR 03004	AA	Brake Line	Balance Bar		$ 30.00	1	$ 30.00	$ -	$ -	$ -	$ 30.00	28
14	Brake System	BR 03005	AA	Brake Line	Tee mount		$ 2.05	1	$ -	$ 2.05	$ -	$ -	$ 2.05	29
15	Brake System	BR 03006	AA	Brake Line	Proportionning valve mount		$ 2.49	1	$ 0.16	$ 2.33	$ -	$ -	$ 2.49	30
16	Brake System				Area Total				$ 973.05	$ 153.84	$ 6.30	$ 0.67	$ 1,133.86	
17	Engine & Drivetrain	EN A0001	AA		Engine		$ 136.09	1	$ 43.85	$ 83.04	$ 4.20	$ 5.00	$ 136.09	32
18	Engine & Drivetrain	EN 01001	AA	Engine	Engine	Honda PC37 Engine	$ 1,500.00	1	$ 1,500.00	$ -	$ -	$ -	$ 1,500.00	33
19	Engine & Drivetrain	EN 01002	AA	Engine	Upper Mount		$ 8.05	2	$ 1.66	$ 6.39	$ -	$ -	$ 16.10	34
20	Engine & Drivetrain	EN 01003	AA	Engine	Upper Axle		$ 4.16	1	$ 0.82	$ 3.34	$ -	$ -	$ 4.16	36
21	Engine & Drivetrain	EN 01004	AA	Engine	Bottom Mount		$ 9.80	2	$ 1.00	$ 8.80	$ -	$ -	$ 19.60	37
22	Engine & Drivetrain	EN 01005	AA	Engine	Bottom Link		$ 9.86	2	$ 1.89	$ 7.97	$ -	$ -	$ 19.72	39
23	Engine & Drivetrain	EN 01006	AA	Engine	Bottom Axle		$ 4.11	1	$ 0.77	$ 3.34	$ -	$ -	$ 4.11	41
24	Engine & Drivetrain	EN 01007	AA	Engine	Front Mount		$ 3.02	2	$ 0.76	$ 2.26	$ -	$ -	$ 5.00	42
25	Engine & Drivetrain	EN 01008	AA	Engine	Spacer		$ 1.41	2	$ 0.02	$ 1.39	$ -	$ -	$ 2.82	43
26	Engine & Drivetrain	EN 01009	AA	Engine	Obstruction Plate		$ 2.62	2	$ 0.08	$ 2.54	$ -	$ -	$ 5.24	44
27	Engine & Drivetrain	EN A0002	AA		Exhaust System		$ 31.96	1	$ 12.50	$ 17.59	$ 0.54	$ 1.33	$ 31.96	46
28	Engine & Drivetrain	EN 02001	AA	Exhaust System	Exhaust tip		$ 4.86	4	$ 0.75	$ 4.11	$ -	$ -	$ 19.44	47
29	Engine & Drivetrain	EN 02002	AA	Exhaust System	Exhaust Flange		$ 1.73	4	$ 0.35	$ 1.38	$ -	$ -	$ 6.92	49
30	Engine & Drivetrain	EN 02003	AA	Exhaust System	Exhaust Headers		$ 76.74	1	$ 4.04	$ 64.70	$ -	$ 8.00	$ 76.74	51
31	Engine & Drivetrain	EN 02004	AA	Exhaust System	Exhaust Primary Collector		$ 77.00	1	$ 1.77	$ 68.90	$ -	$ 6.33	$ 77.00	52
32	Engine & Drivetrain	EN 02005	AA	Exhaust System	Exhaust Secondary Collector		$ 43.82	1	$ 2.56	$ 34.93	$ -	$ 6.33	$ 43.82	53
33	Engine & Drivetrain	EN 02006	AA	Exhaust System	Muffler		$ 42.88	1	$ 11.00	$ 31.52	$ 0.36		$ 42.88	54
34	Engine & Drivetrain	EN 02007	AA	Exhaust System	Muffler Collar		$ 10.66	1	$ 10.00	$ 0.66	$ -	$ -	$ 10.66	55
35	Engine & Drivetrain	EN 02008	AA	Exhaust System	Spacer		$ 1.46	1	$ 0.06	$ 1.40	$ -	$ -	$ 1.46	56
36	Engine & Drivetrain	EN 02009	AA	Exhaust System	Muffler Mount		$ 3.86	1	$ 0.17	$ 3.69	$ -	$ -	$ 3.86	57
37	Engine & Drivetrain	EN A0003	AA		Fuel Tank		$ 53.78	1	$ 3.50	$ 12.60	$ 35.35	$ 2.33	$ 53.78	58
38	Engine & Drivetrain	EN 03001	AA	Fuel Tank	Fuel Tank		$ 70.17	1	$ 19.61	$ 45.17	$ 0.06	$ 5.33	$ 70.17	60
39	Engine & Drivetrain	EN 03002	AA	Fuel Tank	Filler neck		$ 15.37	1	$ 8.41	$ 5.19	$ 1.10	$ 0.67	$ 15.37	62
40	Engine & Drivetrain	EN 03003	AA	Fuel Tank	Filler neck cap		$ 11.85	1	$ 8.34	$ 3.51	$ -	$ -	$ 11.85	63
41	Engine & Drivetrain	EN 03004	AA	Fuel Tank	Rear tab		$ 1.66	2	$ 0.07	$ 1.59	$ -	$ -	$ 3.32	64
42	Engine & Drivetrain	EN 03005	AA	Fuel Tank	Front tab		$ 3.60	1	$ 0.59	$ 3.01	$ -	$ -	$ 3.60	65
43	Engine & Drivetrain	EN 03006	AA	Fuel Tank	Filler neck mount		$ 3.96	1	$ 0.17	$ 3.69	$ 0.10	$ -	$ 3.96	67
44	Engine & Drivetrain	EN 03007	AA	Fuel Tank	Filler neck collar		$ 2.26	1	$ 0.05	$ 2.21	$ -	$ -	$ 2.26	68
45	Engine & Drivetrain	EN A0004	AA		Fuel System		$ 480.46	1	$ 448.61	$ 29.25	$ 1.27	$ 1.33	$ 480.46	69
46	Engine & Drivetrain	EN 04001	AA	Fuel System	Primary Fuel Rail		$ 12.46	1	$ 0.75	$ 9.38	$ -	$ 2.33	$ 12.46	71
47	Engine & Drivetrain	EN 04002	AA	Fuel System	Secondary Fuel Rail		$ 16.12	1	$ 1.17	$ 12.24	$ 0.04	$ 2.67	$ 16.12	72
48	Engine & Drivetrain	EN 04003	AA	Fuel System	Secondary Fuel Rail Mount		$ 19.30	1	$ 5.10	$ 14.20	$ -	$ -	$ 19.30	73
49	Engine & Drivetrain	EN 04004	AA	Fuel System	Fuel Pump Tab		$ 1.72	2	$ 0.06	$ 1.66	$ -	$ -	$ 3.44	74
50	Engine & Drivetrain	EN 04005	AA	Fuel System	Fuel Pressure Regulator Tab		$ 1.89	1	$ 0.05	$ 1.84	$ -	$ -	$ 1.89	75
51	Engine & Drivetrain	EN 04006	AA	Fuel System	Fuel Pressure Left Mount		$ 1.85	1	$ 0.09	$ 1.76	$ -	$ -	$ 1.85	76
52	Engine & Drivetrain	EN 04007	AA	Fuel System	Fuel Pressure Right Mount		$ 2.94	1	$ 0.16	$ 2.78	$ -	$ -	$ 2.94	77

Line Num.	Area of Commodity	Asm/Prt #	Rev. Lvl.	Asm	Component	Description	Unit Cost	Quantity	Material Cost	Process Cost	Fastener Cost	Tooling Cost	Total Cost	Details Page Number
53	Engine & Drivetrain	EN A0005	AA		Air Intake System		$ 86.85	1	$ 1.44	$ 71.26	$ 8.48	$ 5.67	$ 86.85	78
54	Engine & Drivetrain	EN 05001	AA	Air Intake System	Upper Plenum		$ 51.98	1	$ 20.00	$ 31.53	$ -	$ 0.45	$ 51.98	79
55	Engine & Drivetrain	EN 05002	AA	Air Intake System	Bottom Plenum Ring		$ 5.43	1	$ 1.81	$ 3.62	$ -	$ -	$ 5.43	80
56	Engine & Drivetrain	EN 05003	AA	Air Intake System	Bottom Plenum Shape		$ 4.53	1	$ 0.29	$ 3.91	$ -	$ 0.33	$ 4.53	81
57	Engine & Drivetrain	EN 05004	AA	Air Intake System	Bottom Plenum Plate		$ 3.54	1	$ 0.84	$ 2.70	$ -	$ -	$ 3.54	82
58	Engine & Drivetrain	EN 05005	AA	Air Intake System	Inlet Pipe		$ 2.06	4	$ 0.41	$ 1.65	$ -	$ -	$ 8.24	83
59	Engine & Drivetrain	EN 05006	AA	Air Intake System	Pipe End		$ 6.67	4	$ 1.36	$ 5.31	$ -	$ -	$ 26.68	84
60	Engine & Drivetrain	EN 05007	AA	Air Intake System	Injector Housing		$ 8.32	4	$ 0.28	$ 8.04	$ -	$ -	$ 33.28	86
61	Engine & Drivetrain	EN 05008	AA	Air Intake System	Fuel Rail Tab		$ 2.26	1	$ 0.31	$ 1.95	$ -	$ -	$ 2.26	88
62	Engine & Drivetrain	EN 05009	AA	Air Intake System	Manifold Attachment		$ 1.74	2	$ 0.10	$ 1.64	$ -	$ -	$ 3.48	89
63	Engine & Drivetrain	EN A0006	AA		Throttle Body		$ 130.19	1	$ 118.60	$ 8.99	$ 1.27	$ 1.33	$ 130.19	90
64	Engine & Drivetrain	EN 06001	AA	Throttle Body	Throttle Flange		$ 5.18	1	$ 0.73	$ 4.45	$ -	$ -	$ 5.18	92
65	Engine & Drivetrain	EN 06002	AA	Throttle Body	Restrictor		$ 5.73	1	$ 1.58	$ 4.15	$ -	$ -	$ 5.73	93
66	Engine & Drivetrain	EN 06003	AA	Throttle Body	Throttle Housing		$ 4.28	1	$ 0.85	$ 3.43	$ -	$ -	$ 4.28	94
67	Engine & Drivetrain	EN 06004	AA	Throttle Body	Cable Housing Axle		$ 2.73	1	$ 0.06	$ 2.67	$ -	$ -	$ 2.73	95
68	Engine & Drivetrain	EN 06005	AA	Throttle Body	TPS Axle		$ 2.71	1	$ 0.04	$ 2.67	$ -	$ -	$ 2.71	96
69	Engine & Drivetrain	EN 06006	AA	Throttle Body	Throttle Plate		$ 1.49	1	$ 0.07	$ 1.42	$ -	$ -	$ 1.49	97
70	Engine & Drivetrain	EN 06007	AA	Throttle Body	Cable Housing		$ 4.57	1	$ 0.17	$ 3.40	$ -	$ 1.00	$ 4.57	98
71	Engine & Drivetrain	EN 06008	AA	Throttle Body	Axle Stop		$ 2.04	1	$ 0.26	$ 1.78	$ -	$ -	$ 2.04	99
72	Engine & Drivetrain	EN 06009	AA	Throttle Body	Ram Pipe		$ 12.50	1	$ 4.00	$ 8.50	$ -	$ -	$ 12.50	100
73	Engine & Drivetrain	EN 06010	AA	Throttle Body	Tab		$ 1.94	2	$ 0.06	$ 1.88	$ -	$ -	$ 3.88	101
74	Engine & Drivetrain	EN 06011	AA	Throttle Body	Throttle Bady Bracket		$ 2.92	1	$ 0.27	$ 2.65	$ -	$ -	$ 2.92	102
75	Engine & Drivetrain	EN 06012	AA	Throttle Body	Throttle Body Upper Collar		$ 0.51	1	$ 0.03	$ 0.48	$ -	$ -	$ 0.51	103
76	Engine & Drivetrain	EN 06013	AA	Throttle Body	Throttle Body Bottom Collar		$ 1.91	1	$ 0.03	$ 1.88	$ -	$ -	$ 1.91	104
77	Engine & Drivetrain	EN A0007	AA		Overflow Bottles		$ 23.24	1	$ -	$ 17.79	$ 2.12	$ 3.33	$ 23.24	105
78	Engine & Drivetrain	EN 07001	AA	Overflow Bottles	Overflow Bottle		$ 46.33	2	$ 2.80	$ 40.20	$ -	$ 3.33	$ 92.66	106
79	Engine & Drivetrain	EN 07002	AA	Overflow Bottles	Overflow Lines		$ 3.30	2	$ 2.82	$ 0.48	$ -	$ -	$ 6.60	107
80	Engine & Drivetrain	EN A0008	AA		Cooling System		$ 23.90	1	$ 8.10	$ 12.24	$ 1.56	$ 2.00	$ 23.90	108
81	Engine & Drivetrain	EN 08001	AA	Cooling System	Coolant Lines		$ 50.37	1	$ 38.92	$ 6.64	$ 4.81	$ -	$ 50.37	109
82	Engine & Drivetrain	EN 08002	AA	Cooling System	Radiator		$ 28.19	1	$ 21.58	$ 6.11	$ -	$ 0.50	$ 28.19	110
83	Engine & Drivetrain	EN 08003	AA	Cooling System	Fan		$ 34.35	1	$ 30.09	$ 3.98	$ 0.28	$ -	$ 34.35	111
84	Engine & Drivetrain	EN 08004	AA	Cooling System	Expansion Tank		$ 22.15	1	$ 2.86	$ 17.46	$ -	$ 1.83	$ 22.15	112
85	Engine & Drivetrain	EN 08005	AA	Cooling System	Radiator Upper Tab		$ 1.90	1	$ 0.06	$ 1.84	$ -	$ -	$ 1.90	113
86	Engine & Drivetrain	EN 08006	AA	Cooling System	Radiator Lower Tab		$ 2.00	1	$ 0.10	$ 1.90	$ -	$ -	$ 2.00	114
87	Engine & Drivetrain	EN 08007	AA	Cooling System	Radiator Lateral Tab		$ 1.24	1	$ 0.07	$ 1.17	$ -	$ -	$ 1.24	115
88	Engine & Drivetrain	EN 08008	AA	Cooling System	Lateral Bar		$ 1.48	1	$ 0.23	$ 1.25	$ -	$ -	$ 1.48	116
89	Engine & Drivetrain	EN A0009	AA		Differential		$ 79.82	1	$ 70.82	$ 6.65	$ 0.35	$ 2.00	$ 79.82	117
90	Engine & Drivetrain	EN 09001	AA	Differential	Housing		$ 125.33	1	$ 21.60	$ 100.59	$ 3.14	$ -	$ 125.33	118
91	Engine & Drivetrain	EN 09002	AA	Differential	Internals		$ 110.00	1	$ 110.00	$ -	$ -	$ -	$ 110.00	119
92	Engine & Drivetrain	EN 09003	AA	Differential	Right Bearing Carrier		$ 27.04	1	$ 5.33	$ 21.71	$ -	$ -	$ 27.04	120
93	Engine & Drivetrain	EN 09004	AA	Differential	Left Bearing Carrier		$ 39.50	1	$ 9.76	$ 29.74	$ -	$ -	$ 39.50	122
94	Engine & Drivetrain	EN 09005	AA	Differential	Right Bearing Carrier Tab		$ 1.28	2	$ 0.09	$ 1.19	$ -	$ -	$ 2.56	124
95	Engine & Drivetrain	EN 09006	AA	Differential	Left Bearing Carrier Tab		$ 1.43	2	$ 0.12	$ 1.31	$ -	$ -	$ 2.86	126
96	Engine & Drivetrain	EN A0010	AA		Driveshaft		$ 216.04	1	$ 200.00	$ 12.92	$ 3.12	$ -	$ 216.04	127
97	Engine & Drivetrain	EN 10001	AA	Driveshaft	Inboard Tripod Housing		$ 67.72	2	$ 9.53	$ 58.19	$ -	$ -	$ 135.44	128
98	Engine & Drivetrain	EN 10002	AA	Driveshaft	Outboard Tripod Housing		$ 59.57	2	$ 8.02	$ 51.55	$ -	$ -	$ 119.14	129
99	Engine & Drivetrain	EN 10003	AA	Driveshaft	Right Axle		$ 20.86	1	$ 3.34	$ 17.52	$ -	$ -	$ 20.86	130
100	Engine & Drivetrain	EN 10004	AA	Driveshaft	Left Axle		$ 20.70	1	$ 3.30	$ 17.40	$ -	$ -	$ 20.70	131
101	Engine & Drivetrain	EN A0011	AA		Right Tie Rod		$ 15.52	1	$ 3.88	$ 9.40	$ 0.24	$ 2.00	$ 15.52	132
102	Engine & Drivetrain	EN 11001	AA	Right Tie Rod	Right Threaded Rod		$ 5.08	1	$ 0.38	$ 4.70	$ -	$ -	$ 5.08	133
103	Engine & Drivetrain	EN 11002	AA	Right Tie Rod	Right Threaded Tube		$ 5.14	1	$ 0.04	$ 4.02	$ 0.08	$ 1.00	$ 5.14	134
104	Engine & Drivetrain	EN 11003	AA	Right Tie Rod	Right Tie Rod Tab		$ 1.96	2	$ 0.10	$ 1.86	$ -	$ -	$ 3.92	135
105	Engine & Drivetrain	EN A0012	AA		Left Tie Rod		$ 18.12	1	$ 5.00	$ 9.90	$ 1.22	$ 2.00	$ 18.12	136
106	Engine & Drivetrain	EN 12001	AA	Left Tie Rod	Left Threaded Tube		$ 5.14	1	$ 0.04	$ 4.02	$ 0.08	$ 1.00	$ 5.14	137
107	Engine & Drivetrain	EN 12002	AA	Left Tie Rod	Left Tir Rod Tab		$ 1.98	2	$ 0.10	$ 1.88	$ -	$ -	$ 3.96	138
108	Engine & Drivetrain	EN A0013	AA		Chain Set		$ 78.37	1	$ 55.60	$ 18.57	$ 3.53	$ 0.67	$ 78.37	139
109	Engine & Drivetrain	EN 13001	AA	Chain Set	Front Sprocket		$ 14.83	1	$ 2.36	$ 12.47	$ -	$ -	$ 14.83	141
110	Engine & Drivetrain	EN 13002	AA	Chain Set	Rear Sprocket		$ 41.81	1	$ 6.56	$ 35.25	$ -	$ -	$ 41.81	142
111	Engine & Drivetrain	EN 13003	AA	Chain Set	Rear Sprocket Adapter		$ 41.72	1	$ 9.88	$ 31.84	$ -	$ -	$ 41.72	143
112	Engine & Drivetrain	EN 13004	AA	Chain Set	Lower Chain Shield		$ 3.61	1	$ 0.75	$ 2.86	$ -	$ -	$ 3.61	145
113	Engine & Drivetrain	EN 13005	AA	Chain Set	Upper Chain Shield		$ 7.92	1	$ 2.15	$ 5.77	$ -	$ -	$ 7.92	147

Line Num.	Area of Commodity	Asm/Prt #	Rev. Lvl.	Asm	Component	Description	Unit Cost	Quantity	Material Cost	Process Cost	Fastener Cost	Tooling Cost	Total Cost	Details Page Number
114	Engine & Drivetrain				Area Total				$ 2,919.48	$ 1,504.61	$ 73.30	$ 73.42	$ 4,569.77	
115	Frame & Body	FR A0001	AA		Frame		$ 327.82	1	$ 36.00	$ 234.82	$ -	$ 57.00	$ 327.82	150
116	Frame & Body	FR 01001	AA	Frame	Bent Round Steel Tubing		$ 18.63	1	$ 11.43	$ 7.20	$ -	$ -	$ 18.63	151
117	Frame & Body	FR 01002	AA	Frame	Straight Round Steel Tubing		$ 330.39	1	$ 81.59	$ 248.80	$ -	$ -	$ 330.39	152
118	Frame & Body	FR 01003	AA	Frame	Jacking Point Tab		$ 2.66	2	$ 0.19	$ 2.47	$ -	$ -	$ 5.32	153
119	Frame & Body	FR A0002	AA		Impact Attenuator		$ 10.81	1	$ 7.26	$ 2.22	$ -	$ 1.33	$ 10.81	155
120	Frame & Body	FR 02001	AA	Impact Attenuator	Attenuator		$ 45.57	1	$ 12.77	$ 32.80	$ -	$ -	$ 45.57	156
121	Frame & Body	FR 02002	AA	Impact Attenuator	Anti-Intrusion Plate		$ 7.29	1	$ 3.92	$ 3.37	$ -	$ -	$ 7.29	157
122	Frame & Body	FR A0003	AA		Floor Close-out		$ 30.55	1	$ -	$ 19.38	$ 1.17	$ 10.00	$ 30.55	158
123	Frame & Body	FR 03001	AA	Floor Close-out	Front Floor Pan		$ 14.34	1	$ 4.07	$ 10.27	$ -	$ -	$ 14.34	159
124	Frame & Body	FR 03002	AA	Floor Close-out	Middle Floor Pan		$ 16.43	1	$ 5.28	$ 11.15	$ -	$ -	$ 16.43	160
125	Frame & Body	FR 03003	AA	Floor Close-out	Floor Close-out Front Tab		$ 1.74	1	$ 0.03	$ 1.71	$ -	$ -	$ 1.74	161
126	Frame & Body	FR 03004	AA	Floor Close-out	Floor Close-out Tab 2_20		$ 2.83	9	$ 0.05	$ 2.78	$ -	$ -	$ 25.47	162
127	Frame & Body	FR 03005	AA	Floor Close-out	Floor Close-out Tab 1_25		$ 1.93	12	$ 0.02	$ 1.91	$ -	$ -	$ 23.16	163
128	Frame & Body	FR 03006	AA	Floor Close-out	Floor Close-out Tab 2_30		$ 3.07	2	$ 0.05	$ 3.02	$ -	$ -	$ 6.14	164
129	Frame & Body	FR 03007	AA	Floor Close-out	Floor Close-out Tab 1_30		$ 1.93	6	$ 0.02	$ 1.91	$ -	$ -	$ 11.58	165
130	Frame & Body	FR A0004	AA		Pedal Assembly		$ 67.24	1	$ 6.42	$ 54.57	$ 3.58	$ 2.67	$ 67.24	166
131	Frame & Body	FR 04001	AA	Pedal Assembly	Pedal Rail		$ 22.32	2	$ 1.30	$ 21.02	$ -	$ -	$ 44.64	169
132	Frame & Body	FR 04002	AA	Pedal Assembly	Pedal Bushing		$ 1.34	4	$ 0.01	$ 1.33	$ -	$ -	$ 5.36	171
133	Frame & Body	FR 04003	AA	Pedal Assembly	Pedal Base		$ 44.46	1	$ 5.26	$ 39.20	$ -	$ -	$ 44.46	172
134	Frame & Body	FR 04004	AA	Pedal Assembly	Brake Pedal		$ 14.10	1	$ 2.80	$ 11.30	$ -	$ -	$ 14.10	174
135	Frame & Body	FR 04005	AA	Pedal Assembly	Brake Pedal Bracket		$ 10.72	1	$ 1.80	$ 8.92	$ -	$ -	$ 10.72	176
136	Frame & Body	FR 04006	AA	Pedal Assembly	Brake Pedal Pivot		$ 3.52	1	$ 0.07	$ 3.45	$ -	$ -	$ 3.52	178
137	Frame & Body	FR 04007	AA	Pedal Assembly	Brake Pedal Pad		$ 2.86	1	$ 0.23	$ 2.63	$ -	$ -	$ 2.86	179
138	Frame & Body	FR 04008	AA	Pedal Assembly	Throttle Pedal		$ 14.86	1	$ 2.28	$ 12.47	$ 0.11	$ -	$ 14.86	180
139	Frame & Body	FR 04009	AA	Pedal Assembly	Throttle Pedal Bracket		$ 9.34	1	$ 1.27	$ 7.96	$ 0.11	$ -	$ 9.34	182
140	Frame & Body	FR 04010	AA	Pedal Assembly	Throttle Pedal Pivot		$ 3.51	1	$ 0.06	$ 3.45	$ -	$ -	$ 3.51	184
141	Frame & Body	FR 04011	AA	Pedal Assembly	Throttle Pedal Pad		$ 2.86	1	$ 0.23	$ 2.63	$ -	$ -	$ 2.86	185
142	Frame & Body	FR 04012	AA	Pedal Assembly	Balance Bar Mount		$ 10.62	1	$ 0.74	$ 9.88	$ -	$ -	$ 10.62	186
143	Frame & Body	FR 04013	AA	Pedal Assembly	Custom Master-cylinder Clevises		$ 3.86	2	$ 0.28	$ 3.58	$ -	$ -	$ 7.72	188
144	Frame & Body	FR 04014	AA	Pedal Assembly	Master-cylinder Bar		$ 2.99	1	$ 0.19	$ 2.80	$ -	$ -	$ 2.99	190
145	Frame & Body	FR 04015	AA	Pedal Assembly	Throttle Cable Support - left		$ 2.53	1	$ 0.20	$ 2.33	$ -	$ -	$ 2.53	192
146	Frame & Body	FR 04016	AA	Pedal Assembly	Throttle Cable Support - right		$ 2.53	1	$ 0.20	$ 2.33	$ -	$ -	$ 2.53	193
147	Frame & Body	FR 04017	AA	Pedal Assembly	Throttle Cable Support - top		$ 2.11	1	$ 0.07	$ 2.04	$ -	$ -	$ 2.11	194
148	Frame & Body	FR 04018	AA	Pedal Assembly	Throttle Cable Support - bottom		$ 2.21	1	$ 0.12	$ 2.09	$ -	$ -	$ 2.21	195
149	Frame & Body	FR 04019	AA	Pedal Assembly	Throttle Mechanism Rocker		$ 2.80	1	$ 0.23	$ 2.57	$ -	$ -	$ 2.80	196
150	Frame & Body	FR 04020	AA	Pedal Assembly	Throttle Cable Attachment		$ 2.58	1	$ 0.01	$ 2.57	$ -	$ -	$ 2.58	198
151	Frame & Body	FR 04021	AA	Pedal Assembly	Overtravel Switch Mount		$ 2.48	1	$ 0.12	$ 2.36	$ -	$ -	$ 2.48	199
152	Frame & Body	FR 04022	AA	Pedal Assembly	Plastic spacer		$ 0.62	2	$ 0.02	$ 0.60	$ -	$ -	$ 1.24	201
153	Frame & Body	FR A0005	AA		Clutch Actuation System		$ 45.17	1	$ 26.06	$ 16.74	$ 1.04	$ 1.33	$ 45.17	202
154	Frame & Body	FR 05001	AA	Clutch Actuation System	Lever Steel Mount		$ 5.11	2	$ 0.27	$ 4.84	$ -	$ -	$ 10.22	204
155	Frame & Body	FR 05002	AA	Clutch Actuation System	Lever Mount 2		$ 5.46	1	$ 0.31	$ 5.15	$ -	$ -	$ 5.46	206
156	Frame & Body	FR 05003	AA	Clutch Actuation System	Articulation Elbow		$ 6.32	1	$ 0.51	$ 5.81	$ -	$ -	$ 6.32	208
157	Frame & Body	FR 05004	AA	Clutch Actuation System	Lever Handle		$ 9.56	1	$ 1.27	$ 8.29	$ -	$ -	$ 9.56	210
158	Frame & Body	FR 05005	AA	Clutch Actuation System	Lever Joint		$ 11.77	1	$ 0.56	$ 4.54	$ -	$ 6.67	$ 11.77	212
159	Frame & Body	FR 05006	AA	Clutch Actuation System	Clutch Actuation Lever		$ 9.20	1	$ 0.63	$ 1.90	$ -	$ 6.67	$ 9.20	213
160	Frame & Body	FR 05007	AA	Clutch Actuation System	Handle Padding		$ 7.40	1	$ 0.33	$ 0.40	$ -	$ 6.67	$ 7.40	214
161	Frame & Body	FR A0006	AA		Shifter		$ 23.43	1	$ 2.04	$ 19.14	$ 0.92	$ 1.33	$ 23.43	215
162	Frame & Body	FR 06001	AA	Shifter	Proshift Gearshifting Actuator		$ 375.00	1	$ 375.00	$ -	$ -	$ -	$ 375.00	217
163	Frame & Body	FR 06002	AA	Shifter	Actuator Right Steel Mount		$ 5.59	1	$ 0.34	$ 5.25	$ -	$ -	$ 5.59	218
164	Frame & Body	FR 06003	AA	Shifter	Actuator Right Aluminium Mount		$ 10.33	1	$ 1.71	$ 8.62	$ -	$ -	$ 10.33	220
165	Frame & Body	FR 06004	AA	Shifter	Actuator Left Steel Mount		$ 9.02	1	$ 0.79	$ 8.23	$ -	$ -	$ 9.02	222
166	Frame & Body	FR 06005	AA	Shifter	Actuator Left Aluminium Mount		$ 3.00	1	$ 0.12	$ 2.88	$ -	$ -	$ 3.00	224
167	Frame & Body	FR 06006	AA	Shifter	Right Half-Collar		$ 4.17	1	$ 0.59	$ 3.58	$ -	$ -	$ 4.17	226
168	Frame & Body	FR 06007	AA	Shifter	Left Half-Collar		$ 4.29	1	$ 0.59	$ 3.70	$ -	$ -	$ 4.29	228
169	Frame & Body	FR 06008	AA	Shifter	Gearshift Lever		$ 7.26	1	$ 0.39	$ 6.20	$ -	$ 0.67	$ 7.26	230
170	Frame & Body	FR A0007	AA		Body		$ 52.11	1	$ 2.20	$ 30.68	$ 9.90	$ 9.33	$ 52.11	232
171	Frame & Body	FR 07001	AA	Body	Body		$ 2,319.93	1	$ 990.00	$ 1,307.00	$ -	$ 22.93	$ 2,319.93	233
172	Frame & Body	FR 07002	AA	Body	Front Mount 1		$ 2.28	2	$ 0.08	$ 2.20	$ -	$ -	$ 4.56	234
173	Frame & Body	FR 07003	AA	Body	Front Mount 2		$ 2.24	2	$ 0.08	$ 2.16	$ -	$ -	$ 4.48	235
174	Frame & Body	FR 07004	AA	Body	Front Mount 3		$ 2.53	2	$ 0.11	$ 2.42	$ -	$ -	$ 5.06	236

Line Num.	Area of Commodity	Asm/Prt #	Rev. Lvl.	Asm	Component	Description	Unit Cost	Quantity	Material Cost	Process Cost	Fastener Cost	Tooling Cost	Total Cost	Details Page Number
175	Frame & Body	FR 07005	AA	Body	Front Lateral Mount 1		$ 2.24	2	$ 0.08	$ 2.16	$ -	$ -	$ 4.48	237
176	Frame & Body	FR 07006	AA	Body	Front Lateral Mount 2		$ 2.33	2	$ 0.09	$ 2.24	$ -	$ -	$ 4.66	238
177	Frame & Body	FR 07007	AA	Body	Front Lateral Mount 3		$ 2.22	2	$ 0.08	$ 2.14	$ -	$ -	$ 4.44	239
178	Frame & Body	FR 07008	AA	Body	Rear Lateral Mount 1		$ 2.25	2	$ 0.08	$ 2.17	$ -	$ -	$ 4.50	240
179	Frame & Body	FR 07009	AA	Body	Rear Lateral Mount 2		$ 2.09	2	$ 0.06	$ 2.03	$ -	$ -	$ 4.18	241
180	Frame & Body	FR 07010	AA	Body	Rear Lateral Mount 3		$ 2.14	2	$ 0.01	$ 2.13	$ -	$ -	$ 4.28	242
181	Frame & Body	FR 07011	AA	Body	Rear Lateral Mount 4		$ 2.18	2	$ 0.07	$ 2.11	$ -	$ -	$ 4.36	243
182	Frame & Body	FR 07012	AA	Body	Air Inlet Mount 1		$ 2.86	2	$ 0.15	$ 2.71	$ -	$ -	$ 5.72	244
183	Frame & Body	FR 07013	AA	Body	Air Inlet Mount 2		$ 2.40	2	$ 0.10	$ 2.30	$ -	$ -	$ 4.80	245
184	Frame & Body	FR 07014	AA	Body	Air Inlet Mount 3		$ 6.15	2	$ 0.12	$ 5.70	$ -	$ 0.33	$ 12.30	246
185	Frame & Body	FR 07015	AA	Body	Air Inlet Mount 4		$ 6.17	2	$ 0.12	$ 5.72	$ -	$ 0.33	$ 12.34	247
186	Frame & Body	FR 07016	AA	Body	Air inlet reinforcement		$ 3.05	2	$ 0.61	$ 2.44	$ -	$ -	$ 6.10	248
187	Frame & Body				Area Total				$ 1,594.50	$ 2,360.46	$ 16.83	$ 126.60	$ 4,098.39	
188	Electrical	EL A0001	AA		Battery Assembly		$ 131.48	1	$ 117.04	$ 12.66	$ 1.11	$ 0.67	$ 131.48	250
189	Electrical	EL 01001	AA	Battery Assembly	Battery Tab		$ 1.72	1	$ 0.06	$ 1.66	$ -	$ -	$ 1.72	251
190	Electrical	EL 01002	AA	Battery Assembly	Battery Bracket		$ 12.93	1	$ 0.85	$ 10.75	$ -	$ 1.33	$ 12.93	252
191	Electrical	EL 01003	AA	Battery Assembly	Master Switch Mount		$ 2.70	1	$ 0.50	$ 2.20	$ -	$ -	$ 2.70	253
192	Electrical	EL A0002	AA		Dashboard Assembly		$ 54.66	1	$ 35.10	$ 17.26	$ 0.30	$ 2.00	$ 54.66	254
193	Electrical	EL 02001	AA	Dashboard Assembly	Dashboard		$ 4.70	1	$ 1.01	$ 3.69	$ -	$ -	$ 4.70	255
194	Electrical	EL 02002	AA	Dashboard Assembly	Gear Indicator		$ 46.57	1	$ 46.00	$ 0.57	$ -	$ -	$ 46.57	256
195	Electrical	EL 02003	AA	Dashboard Assembly	Dashboard Tab		$ 0.58	6	$ 0.05	$ 0.53	$ -	$ -	$ 3.48	257
196	Electrical	EL 02004	AA	Dashboard Assembly	Gear Indicator Mount		$ 2.59	1	$ 0.05	$ 2.54	$ -	$ -	$ 2.59	258
197	Electrical	EL A0003	AA		Forward Wiring Harness		$ 134.56	1	$ 58.74	$ 73.16	$ 0.66	$ 2.00	$ 134.56	259
198	Electrical	EL 03001	AA	Forward Wiring Harness	Ground Tab		$ 1.13	2	$ 0.04	$ 1.09	$ -	$ -	$ 2.26	261
199	Electrical	EL A0004	AA		Rear Wiring Harness		$ 1,025.84	1	$ 846.76	$ 175.78	$ 1.30	$ 2.00	$ 1,025.84	262
200	Electrical	EL 04001	AA	Rear Wiring Harness	Electrical System Tab		$ 0.92	3	$ 0.04	$ 0.88	$ -	$ -	$ 2.76	264
201	Electrical	EL 04002	AA	Rear Wiring Harness	ECU Bracket		$ 3.30	1	$ 0.85	$ 2.45	$ -	$ -	$ 3.30	265
202	Electrical	EL 04003	AA	Rear Wiring Harness	Brake Light Tab		$ 1.42	2	$ 0.03	$ 1.39	$ -	$ -	$ 2.84	266
203	Instruments & Wiring				Area Total				$ 1,107.52	$ 313.50	$ 3.37	$ 8.00	$ 1,432.39	
204	Miscellaneous, Fit & Finish	MS A0001	AA		Firewall		$ 48.93	1	$ 1.16	$ 37.38	$ 1.72	$ 8.67	$ 48.93	268
205	Miscellaneous, Fit & Finish	MS 01001	AA	Firewall	Firewall Main Plate		$ 19.81	1	$ 6.13	$ 13.68	$ -	$ -	$ 19.81	270
206	Miscellaneous, Fit & Finish	MS 01002	AA	Firewall	Firewall Rear Right Plate		$ 3.27	1	$ 0.36	$ 2.91	$ -	$ -	$ 3.27	272
207	Miscellaneous, Fit & Finish	MS 01003	AA	Firewall	Firewall Rear Left Plate		$ 3.35	1	$ 0.36	$ 2.99	$ -	$ -	$ 3.35	274
208	Miscellaneous, Fit & Finish	MS 01004	AA	Firewall	Firewall Right Plate		$ 9.05	1	$ 1.98	$ 7.07	$ -	$ -	$ 9.05	275
209	Miscellaneous, Fit & Finish	MS 01005	AA	Firewall	Firewall Left Plate		$ 9.05	1	$ 1.98	$ 7.07	$ -	$ -	$ 9.05	277
210	Miscellaneous, Fit & Finish	MS 01006	AA	Firewall	Firewall Pass-through Plate 1		$ 2.93	1	$ 0.31	$ 2.62	$ -	$ -	$ 2.93	278
211	Miscellaneous, Fit & Finish	MS 01007	AA	Firewall	Firewall Pass-through Plate 2		$ 3.23	1	$ 0.65	$ 2.58	$ -	$ -	$ 3.23	279
212	Miscellaneous, Fit & Finish	MS 01008	AA	Firewall	Tab 1		$ 1.03	2	$ 0.03	$ 1.00	$ -	$ -	$ 2.06	281
213	Miscellaneous, Fit & Finish	MS 01009	AA	Firewall	Tab 2		$ 1.05	2	$ 0.03	$ 1.02	$ -	$ -	$ 2.10	282
214	Miscellaneous, Fit & Finish	MS 01010	AA	Firewall	Tab 3-4		$ 0.40	4	$ 0.03	$ 0.37	$ -	$ -	$ 1.60	283
215	Miscellaneous, Fit & Finish	MS 01011	AA	Firewall	Tab 5-9		$ 0.71	2	$ 0.03	$ 0.68	$ -	$ -	$ 1.42	284
216	Miscellaneous, Fit & Finish	MS 01012	AA	Firewall	Tab 6		$ 0.70	4	$ 0.03	$ 0.67	$ -	$ -	$ 2.80	285
217	Miscellaneous, Fit & Finish	MS 01013	AA	Firewall	Tab 7		$ 0.71	4	$ 0.03	$ 0.68	$ -	$ -	$ 2.84	286
218	Miscellaneous, Fit & Finish	MS 01014	AA	Firewall	Tab 8		$ 0.65	4	$ 0.03	$ 0.62	$ -	$ -	$ 2.60	287
219	Miscellaneous, Fit & Finish	MS 01015	AA	Firewall	Tab 10		$ 7.50	1	$ 1.11	$ 6.39	$ -	$ -	$ 7.50	288
220	Miscellaneous, Fit & Finish	MS A0002	AA		Harness		$ 54.85	1	$ 45.00	$ 5.71	$ 3.47	$ 0.67	$ 54.85	290
221	Miscellaneous, Fit & Finish	MS 02001	AA	Harness	Harness tab		$ 1.79	2	$ 0.08	$ 1.71	$ -	$ -	$ 3.58	291
222	Miscellaneous, Fit & Finish	MS A0003	AA		Headrest		$ 13.04	1	$ 1.32	$ 9.72	$ 1.00	$ 1.00	$ 13.04	293
223	Miscellaneous, Fit & Finish	MS 03001	AA	Headrest	Headrest back plate		$ 4.41	1	$ 1.84	$ 2.57	$ -	$ -	$ 4.41	294
224	Miscellaneous, Fit & Finish	MS 03002	AA	Headrest	Side tab		$ 0.88	2	$ 0.08	$ 0.80	$ -	$ -	$ 1.76	295
225	Miscellaneous, Fit & Finish	MS 03003	AA	Headrest	Bottom tab		$ 1.73	1	$ 0.19	$ 1.54	$ -	$ -	$ 1.73	296
226	Miscellaneous, Fit & Finish	MS 03004	AA	Headrest	Upper plate		$ 5.42	1	$ 0.59	$ 4.83	$ -	$ -	$ 5.42	297
227	Miscellaneous, Fit & Finish	MS 03005	AA	Headrest	Bottom plate		$ 3.47	1	$ 0.44	$ 3.03	$ -	$ -	$ 3.47	299
228	Miscellaneous, Fit & Finish	MS A0004	AA		Safety		$ 0.25	1	$ -	$ 0.25	$ -	$ -	$ 0.25	300
229	Miscellaneous, Fit & Finish	MS 04001	AA	Safety	Roll Bar Padding		$ 2.87	2	$ 0.05	$ 2.82	$ -	$ -	$ 5.74	301
230	Miscellaneous, Fit & Finish	MS A0005	AA		Seat		$ 47.67	1	$ 13.74	$ 29.08	$ 2.18	$ 2.67	$ 47.67	302
231	Miscellaneous, Fit & Finish	MS 05001	AA	Seat	Seat		$ 190.42	1	$ 84.15	$ 103.34	$ 1.60	$ 1.33	$ 190.42	303
232	Miscellaneous, Fit & Finish	MS 05002	AA	Seat	Lower Seat Tab		$ 4.46	2	$ 0.31	$ 3.48	$ -	$ 0.67	$ 8.92	304
233	Miscellaneous, Fit & Finish	MS 05003	AA	Seat	Side Seat Tab		$ 1.85	2	$ 0.20	$ 1.65	$ -	$ -	$ 3.70	306
234	Miscellaneous, Fit & Finish	MS 05004	AA	Seat	Rear Seat Mount		$ 33.67	1	$ 6.47	$ 25.87	$ -	$ 1.33	$ 33.67	308
235	Miscellaneous, Fit & Finish	MS 05005	AA	Seat	Lower Seat Mount		$ 3.10	2	$ 0.33	$ 2.40	$ -	$ 0.37	$ 6.20	310

Line Num.	Area of Commodity	Asm/Prt #	Rev. Lvl.	Asm	Component	Description	Unit Cost	Quantity	Material Cost	Process Cost	Fastener Cost	Tooling Cost	Total Cost	Details Page Number
236	Miscellaneous, Fit & Finish	MS 05006	AA	Seat	Side Intermediate Seat Mount		$ 2.49	2	$ 0.21	$ 1.91	$ 0.37	$ -	$ 4.98	312
237	Miscellaneous, Fit & Finish	MS 05007	AA	Seat	Rear Intermediate Seat Mount		$ 2.49	1	$ 0.21	$ 1.91	$ 0.37	$ -	$ 2.49	314
238	Miscellaneous, Fit & Finish				Area Total				$ 171.17	$ 314.84	$ 11.08	$ 17.75	$ 514.84	
239	Steering System	ST A0001	AA		Steering Column		$ 83.10	1	$ 71.23	$ 10.35	$ 0.85	$ 0.67	$ 83.10	317
240	Steering System	ST 01001	AA	Steering Column	Column Tab		$ 1.89	1	$ 0.08	$ 1.81	$ -	$ -	$ 1.89	319
241	Steering System	ST 01002	AA	Steering Column	Column Mount		$ 5.41	1	$ 0.97	$ 4.44	$ -	$ -	$ 5.41	320
242	Steering System	ST 01003	AA	Steering Column	Column Mount Washer		$ 1.47	1	$ 0.02	$ 1.45	$ -	$ -	$ 1.47	322
243	Steering System	ST 01004	AA	Steering Column	Gearshift Connector Mount		$ 2.09	1	$ 0.14	$ 1.95	$ -	$ -	$ 2.09	323
244	Steering System	ST 01005	AA	Steering Column	Steering Wheel Mount		$ 10.17	1	$ 1.61	$ 7.23	$ -	$ 1.33	$ 10.17	324
245	Steering System	ST 01006	AA	Steering Column	Steering Wheel		$ 14.33	1	$ 3.78	$ 10.55	$ -	$ -	$ 14.33	326
246	Steering System	ST 01007	AA	Steering Column	First Column Tube		$ 5.49	1	$ 0.90	$ 4.59	$ -	$ -	$ 5.49	327
247	Steering System	ST 01008	AA	Steering Column	Second Column Tube		$ 1.10	1	$ 0.10	$ 1.00	$ -	$ -	$ 1.10	329
248	Steering System	ST 01009	AA	Steering Column	Third Column Tube		$ 1.74	1	$ 0.39	$ 1.35	$ -	$ -	$ 1.74	330
249	Steering System	ST A0002	AA		Quick Release		$ 5.77	1	$ 4.01	$ 1.25	$ 0.18	$ 0.33	$ 5.77	331
250	Steering System	ST 02001	AA	Quick Release	Quick Release Mount		$ 5.99	1	$ 0.63	$ 5.36	$ -	$ -	$ 5.99	332
251	Steering System	ST 02002	AA	Quick Release	Quick Release Sliding Part		$ 11.04	1	$ 2.44	$ 8.60	$ -	$ -	$ 11.04	333
252	Steering System	ST 02003	AA	Quick Release	Quick Release Fixed Part		$ 9.74	1	$ 2.44	$ 7.30	$ -	$ -	$ 9.74	334
253	Steering System	ST A0003	AA		Tie Rod Assembly		$ 10.32	2	$ 4.05	$ 5.21	$ 0.39	$ 0.67	$ 20.64	335
254	Steering System	ST 03001	AA	Tie Rod Assembly	Tie Rod Insert		$ 2.41	4	$ 0.04	$ 2.37	$ -	$ -	$ 9.64	336
255	Steering System	ST 03002	AA	Tie Rod Assembly	Upright Tapered Spacer		$ 1.66	4	$ 0.01	$ 1.65	$ -	$ -	$ 6.64	338
256	Steering System	ST 03003	AA	Tie Rod Assembly	Rack Tapered Spacer		$ 1.67	4	$ 0.01	$ 1.66	$ -	$ -	$ 6.68	339
257	Steering System	ST 03004	AA	Tie Rod Assembly	Rod Tube		$ 0.53	2	$ 0.35	$ 0.18	$ -	$ -	$ 1.06	340
258	Steering System	ST A0004	AA		Steering Rack Assembly		$ 8.15	1	$ 0.50	$ 5.06	$ 1.92	$ 0.67	$ 8.15	341
259	Steering System	ST 04001	AA	Steering Rack Assembly	Rack		$ 3.62	1	$ 1.67	$ 1.95	$ -	$ -	$ 3.62	343
260	Steering System	ST 04002	AA	Steering Rack Assembly	Rack Pinion		$ 10.32	1	$ 1.77	$ 8.55	$ -	$ -	$ 10.32	344
261	Steering System	ST 04003	AA	Steering Rack Assembly	Rack Housing		$ 11.85	1	$ 1.26	$ 3.92	$ -	$ 6.67	$ 11.85	345
262	Steering System	ST 04004	AA	Steering Rack Assembly	Lawer Rack Mount		$ 4.09	2	$ 1.08	$ 3.01	$ -	$ -	$ 8.18	346
263	Steering System	ST 04005	AA	Steering Rack Assembly	Upper Rack Mount		$ 2.43	2	$ 0.22	$ 2.21	$ -	$ -	$ 4.86	348
264	Steering System	ST 04006	AA	Steering Rack Assembly	Rack Stop		$ 4.04	2	$ 0.33	$ 3.71	$ -	$ -	$ 8.08	350
265	Steering System	ST 04007	AA	Steering Rack Assembly	Rack Protection		$ 6.61	1	$ 3.25	$ 3.36	$ -	$ -	$ 6.61	352
266	Steering System				Area Total				$ 109.49	$ 141.43	$ 3.73	$ 11.01	$ 265.66	
267	Suspension	SU A0001	AA		Lower Front A-Arms		$ 47.25	2	$ 22.73	$ 14.19	$ 1.00	$ 9.33	$ 94.50	354
268	Suspension	SU 01001	AA	Lower Front A-Arms	Lower Front A arm mounts		$ 8.70	4	$ 0.61	$ 8.09	$ -	$ -	$ 34.80	356
269	Suspension	SU 01002	AA	Lower Front A-Arms	Simple insert		$ 3.15	4	$ 0.11	$ 3.04	$ -	$ -	$ 12.60	358
270	Suspension	SU 01003	AA	Lower Front A-Arms	Bearing support		$ 4.40	4	$ 0.26	$ 4.14	$ -	$ -	$ 17.60	360
271	Suspension	SU 01004	AA	Lower Front A-Arms	Lower front double insert		$ 15.85	2	$ 1.66	$ 14.19	$ -	$ -	$ 31.70	362
272	Suspension	SU 01005	AA	Lower Front A-Arms	Spacer		$ 1.33	8	$ 0.01	$ 1.32	$ -	$ -	$ 10.64	364
273	Suspension	SU A0002	AA		Upper Front A-Arms		$ 47.25	2	$ 22.73	$ 14.19	$ 1.00	$ 9.33	$ 94.50	365
274	Suspension	SU 02001	AA	Upper Front A-Arms	Upper Front A arm mounts		$ 9.09	4	$ 0.68	$ 8.41	$ -	$ -	$ 36.36	367
275	Suspension	SU 02002	AA	Upper Front A-Arms	Simple insert		$ 3.15	4	$ 0.11	$ 3.04	$ -	$ -	$ 12.60	369
276	Suspension	SU 02003	AA	Upper Front A-Arms	Bearing support		$ 4.40	4	$ 0.26	$ 4.14	$ -	$ -	$ 17.60	370
277	Suspension	SU 02004	AA	Upper Front A-Arms	Lower front double insert		$ 35.86	2	$ 3.73	$ 32.13	$ -	$ -	$ 71.72	371
278	Suspension	SU 02005	AA	Upper Front A-Arms	Spacer		$ 1.33	8	$ 0.01	$ 1.32	$ -	$ -	$ 10.64	373
279	Suspension	SU A0003	AA		Lower Rear A-Arms		$ 42.59	2	$ 22.73	$ 14.19	$ 1.00	$ 4.67	$ 85.18	374
280	Suspension	SU 03001	AA	Lower Rear A-Arms	Lower Rear A-Arms Front Mounts		$ 8.63	2	$ 0.59	$ 8.04	$ -	$ -	$ 17.26	376
281	Suspension	SU 03002	AA	Lower Rear A-Arms	Lower Rear A-Arms Rear Mounts		$ 10.57	2	$ 0.59	$ 9.98	$ -	$ -	$ 21.14	378
282	Suspension	SU 03003	AA	Lower Rear A-Arms	Simple Insert		$ 3.15	4	$ 0.11	$ 3.04	$ -	$ -	$ 12.60	380
283	Suspension	SU 03004	AA	Lower Rear A-Arms	Bearing Support		$ 4.40	4	$ 0.26	$ 4.14	$ -	$ -	$ 17.60	381
284	Suspension	SU 03005	AA	Lower Rear A-Arms	Lower Rear Double Insert		$ 15.85	2	$ 1.66	$ 14.19	$ -	$ -	$ 31.70	382
285	Suspension	SU 03006	AA	Lower Rear A-Arms	Spacer		$ 1.33	8	$ 0.01	$ 1.32	$ -	$ -	$ 10.64	384
286	Suspension	SU A0004	AA		Upper Rear A-Arms / Pullrods		$ 75.61	2	$ 45.15	$ 24.15	$ 1.64	$ 4.67	$ 151.22	385
287	Suspension	SU 04001	AA	Upper Rear A-Arms / Pullrods	Upper Rear A-Arms Front Mounts		$ 8.79	2	$ 0.62	$ 8.17	$ -	$ -	$ 17.58	387
288	Suspension	SU 04002	AA	Upper Rear A-Arms / Pullrods	Upper Rear A-Arms Rear Mounts		$ 11.14	2	$ 1.03	$ 10.11	$ -	$ -	$ 22.28	389
289	Suspension	SU 04003	AA	Upper Rear A-Arms / Pullrods	Simple Insert		$ 3.15	4	$ 0.11	$ 3.04	$ -	$ -	$ 12.60	391
290	Suspension	SU 04004	AA	Upper Rear A-Arms / Pullrods	Bearing Support		$ 4.40	6	$ 0.26	$ 4.14	$ -	$ -	$ 26.40	392
291	Suspension	SU 04005	AA	Upper Rear A-Arms / Pullrods	Upper Rear Double Insert		$ 36.28	2	$ 3.82	$ 32.46	$ -	$ -	$ 72.56	393
292	Suspension	SU 04006	AA	Upper Rear A-Arms / Pullrods	Pullrod Insert		$ 3.15	4	$ 0.11	$ 3.04	$ -	$ -	$ 12.60	395
293	Suspension	SU 04007	AA	Upper Rear A-Arms / Pullrods	Spacer		$ 1.33	12	$ 0.01	$ 1.32	$ -	$ -	$ 15.96	397
294	Suspension	SU A0005	AA		Front Suspension		$ 4.93	2	$ 0.04	$ 3.61	$ 0.61	$ 0.67	$ 9.86	398
295	Suspension	SU 05001	AA	Front Suspension	Dampers		$ 305.00	2	$ 305.00	$ -	$ -	$ -	$ 610.00	399
296	Suspension	SU 05002	AA	Front Suspension	Springs		$ 25.00	2	$ 25.00	$ -	$ -	$ -	$ 50.00	400

Line Num.	Area of Commodity	Asm/Prt #	Rev. Lvl.	Asm	Component	Description	Unit Cost	Quantity	Material Cost	Process Cost	Fastener Cost	Tooling Cost	Total Cost	Details Page Number
297	Suspension	SU 05003	AA	Front Suspension	Front Suspension Mount		$ 3.96	2	$ 0.27	$ 3.69	$ -	$ -	$ 7.92	401
298	Suspension	SU A0006	AA		Front Rocker		$ 5.67	2	$ -	$ 3.36	$ 0.31	$ 2.00	$ 11.34	402
299	Suspension	SU 06001	AA	Front Rocker	Sheet Metal Of The Rocker		$ 6.49	2	$ 1.25	$ 5.24	$ -	$ -	$ 12.98	403
300	Suspension	SU 06002	AA	Front Rocker	Cylinder		$ 1.99	2	$ 0.12	$ 1.87	$ -	$ -	$ 3.98	405
301	Suspension	SU 06003	AA	Front Rocker	Bushing		$ 1.32	4	$ 0.01	$ 1.31	$ -	$ -	$ 5.28	406
302	Suspension	SU 06004	AA	Front Rocker	Rocker Mount		$ 4.42	2	$ 0.42	$ 4.00	$ -	$ -	$ 8.84	407
303	Suspension	SU A0007	AA		Front Tie-Rod		$ 13.44	2	$ 5.00	$ 7.08	$ 0.69	$ 0.67	$ 26.88	408
304	Suspension	SU 07001	AA	Front Tie-Rod	Rod Tube		$ 0.45	2	$ 0.22	$ 0.23	$ -	$ -	$ 0.90	409
305	Suspension	SU 07002	AA	Front Tie-Rod	Tie Rod Right Hand Insert		$ 2.47	2	$ 0.07	$ 2.40	$ -	$ -	$ 4.94	410
306	Suspension	SU 07003	AA	Front Tie-Rod	Tie Rod Left Hand Insert		$ 2.47	2	$ 0.07	$ 2.40	$ -	$ -	$ 4.94	411
307	Suspension	SU A0008	AA		Rear Suspension		$ 6.93	2	$ 0.04	$ 5.95	$ 0.61	$ 0.33	$ 13.86	412
308	Suspension	SU 08001	AA	Rear Suspension	Dampers		$ 305.00	2	$ 305.00	$ -	$ -	$ -	$ 610.00	413
309	Suspension	SU 08002	AA	Rear Suspension	Springs		$ 25.00	2	$ 25.00	$ -	$ -	$ -	$ 50.00	414
310	Suspension	SU 08003	AA	Rear Suspension	Rear Suspension Mount		$ 7.15	2	$ 0.56	$ 6.59	$ -	$ -	$ 14.30	415
311	Suspension	SU A0009	AA		Rear Rocker		$ 7.35	2	$ -	$ 5.71	$ 0.31	$ 1.33	$ 14.70	416
312	Suspension	SU 09001	AA	Rear Rocker	Sheet Metal Of The Rocker		$ 5.41	2	$ 0.82	$ 4.59	$ -	$ -	$ 10.82	417
313	Suspension	SU 09002	AA	Rear Rocker	Cylinder		$ 1.99	2	$ 0.12	$ 1.87	$ -	$ -	$ 3.98	419
314	Suspension	SU 09003	AA	Rear Rocker	Bushing		$ 1.32	4	$ 0.01	$ 1.31	$ -	$ -	$ 5.28	420
315	Suspension	SU 09004	AA	Rear Rocker	Rocker Mount		$ 13.21	2	$ 1.39	$ 11.82	$ -	$ -	$ 26.42	421
316	Suspension	SU A0010	AA		Rear Tie-Rod		$ 13.44	2	$ 5.00	$ 7.08	$ 0.69	$ 0.67	$ 26.88	423
317	Suspension	SU 10001	AA	Rear Tie-Rod	Rod Tube		$ 0.45	2	$ 0.22	$ 0.23	$ -	$ -	$ 0.90	424
318	Suspension	SU 10002	AA	Rear Tie-Rod	Tie Rod Right Hand Insert		$ 2.47	2	$ 0.07	$ 2.40	$ -	$ -	$ 4.94	425
319	Suspension	SU 10003	AA	Rear Tie-Rod	Tie Rod Left Hand Insert		$ 2.47	2	$ 0.07	$ 2.40	$ -	$ -	$ 4.94	426
320	Suspension	SU A0011	AA		Front Uprights Assembly		$ 8.76	2	$ -	$ 7.82	$ 0.94	$ -	$ 17.52	427
321	Suspension	SU 11001	AA	Front Uprights Assembly	Front Uprights		$ 161.71	2	$ 39.36	$ 122.35	$ -	$ -	$ 323.42	428
322	Suspension	SU 11002	AA	Front Uprights Assembly	Steering Tab		$ 5.74	2	$ 0.76	$ 4.98	$ -	$ -	$ 11.48	430
323	Suspension	SU 11003	AA	Front Uprights Assembly	Upper Tab		$ 5.88	2	$ 0.88	$ 5.00	$ -	$ -	$ 11.76	432
324	Suspension	SU 11004	AA	Front Uprights Assembly	Camber Adjustment Shims		$ 1.85	2	$ 0.30	$ 1.55	$ -	$ -	$ 3.70	434
325	Suspension	SU 11005	AA	Front Uprights Assembly	Lower Spacer		$ 1.33	4	$ 0.01	$ 1.32	$ -	$ -	$ 5.32	435
326	Suspension	SU 11006	AA	Front Uprights Assembly	Upper Spacer		$ 1.37	4	$ 0.03	$ 1.34	$ -	$ -	$ 5.48	436
327	Suspension	SU A0012	AA		Rear Uprights Assembly		$ 10.15	2	$ -	$ 9.07	$ 1.08	$ -	$ 20.30	437
328	Suspension	SU 12001	AA	Rear Uprights Assembly	Rear Uprights		$ 142.90	2	$ 36.55	$ 106.35	$ -	$ -	$ 285.80	438
329	Suspension	SU 12002	AA	Rear Uprights Assembly	Upper Tab		$ 5.88	4	$ 0.88	$ 5.00	$ -	$ -	$ 23.52	440
330	Suspension	SU 12003	AA	Rear Uprights Assembly	Camber Adjustment Shims		$ 1.85	4	$ 0.30	$ 1.55	$ -	$ -	$ 7.40	442
331	Suspension	SU 12004	AA	Rear Uprights Assembly	Lower Spacer		$ 1.33	4	$ 0.01	$ 1.32	$ -	$ -	$ 5.32	443
332	Suspension	SU 12005	AA	Rear Uprights Assembly	Upper Spacer		$ 1.37	8	$ 0.03	$ 1.34	$ -	$ -	$ 10.96	444
333	Suspension & Shocks				Area Total				$ 1,778.92	$ 1,383.42	$ 19.76	$ 67.34	$ 3,249.44	
334	Wheels & Tires	WT A0001	AA		Wheel Assembly		$ 8.91	4	$ 4.00	$ 3.31	$ 1.60	$ -	$ 35.64	446
335	Wheels & Tires	WT 01001	AA	Wheel Assembly	Wheels		$ 115.00	4	$ 115.00	$ -	$ -	$ -	$ 460.00	447
336	Wheels & Tires	WT 01002	AA	Wheel Assembly	Tires		$ 85.00	4	$ 85.00	$ -	$ -	$ -	$ 340.00	448
337	Wheels & Tires	WT 01003	AA	Wheel Assembly	Valve Stem		$ 1.00	4	$ 1.00	$ -	$ -	$ -	$ 4.00	449
338	Wheels & Tires	WT A0002	AA		Front Hubs		$ 34.88	2	$ 18.26	$ 3.14	$ 13.48	$ -	$ 69.76	450
339	Wheels & Tires	WT 02001	AA	Front Hubs	Front Hub		$ 91.31	2	$ 19.26	$ 72.05	$ -	$ -	$ 182.62	451
340	Wheels & Tires	WT 02002	AA	Front Hubs	Bearings		$ 122.59	4	$ 122.59	$ -	$ -	$ -	$ 490.36	453
341	Wheels & Tires	WT A0003	AA		Rear Hubs		$ 36.88	2	$ 18.26	$ 5.14	$ 13.48	$ -	$ 73.76	454
342	Wheels & Tires	WT 03001	AA	Rear Hubs	Rear Hub		$ 93.11	2	$ 19.26	$ 73.85	$ -	$ -	$ 186.22	455
343	Wheels & Tires	WT 03002	AA	Rear Hubs	Bearings		$ 122.59	4	$ 122.59	$ -	$ -	$ -	$ 490.36	457
344	Wheels & Tires				Area Total				$ 1,950.80	$ 321.60	$ 60.32	$ -	$ 2,332.72	
345	Vehicle Total				Total				**$ 10,604.93**	**$ 6,493.70**	**$ 194.69**	**$ 304.79**	**$ 17,597.07**	

BRAKE SYSTEM

EPSA TEAM CAR # 81

University	Ecole Cenrale de Lyon	**Car #**	81	**Asm Cost**	$ 110.50
System	Brake System			**Qty**	2
Assembly	Front brake rotor	**FileLink1**			
P/N Base	A0001	**FileLink2**		**Extended Cost**	$ 221.00
Suffix	AA	**FileLink3**			
Details	Front brake Rotor Assembly				

ItemOrder	Part	Part Cost	Quantity	Sub Total
10	Brake Rotor	$ 6.03	1	$ 6.03
20	Brake Shrink Disc	$ 7.63	1	$ 7.63
30	Brake Caliper	$ 83.00	1	$ 83.00
40	Brake pad	$ 0.96	2	$ 1.92
50	Brake Rotor button	$ 1.34	6	$ 8.04
			Sub Total	**$ 106.62**

ItemOrder	Process	Use	UnitCost	Unit	Quantity	Multiplier	Mult. Val.	Sub Total
10	Assemble,1kg, Line on Line	Line up Pads	$ 0.13	unit	2			$ 0.26
20	Assemble, 1 kg, Loose	Put caliper in place	$ 0.06	unit	1			$ 0.06
30	Ratchet <= 25.4 mm	Bolt caliper to upright	$ 0.75	unit	2			$ 1.50
40	Assemble,1kg, Line on Line	Assemble Brake Rotors and Shrink discs	$ 0.13	Unit	1			$ 0.13
50	Assemble,1kg, Loose	Insert buttons and washers	$ 0.06	Unit	6			$ 0.36
60	Assemble,1kg, Line on Line	Retaining rings	$ 0.13	Unit	6			$ 0.78
70	Assemble,1kg, Line on Line	Assemble Brake Rotor onto hub	$ 0.13	Unit	1			$ 0.13
							Sub Total	**$ 3.22**

ItemOrder	Fastener	Use	UnitCost	Size1	Unit1	Size2	Unit2	Quantity	Sub Total
10	Bolt,Grade 8.8 (SAE)	Calipers in Uprights	$ 0.14	8	mm	35	mm	2	$ 0.28
20	Washer, Grade 8.8 (SAE 5)	Calipers in Uprights	$ 0.01	8	mm			2	$ 0.02
30	Washer, Grade 8.8 (SAE 5)	Assemble Brake Rotors and Shrink discs	$ 0.01	12	mm			12	$ 0.12
40	Retaining Ring, External	Assemble Brake Rotors and Shrink discs	$ 0.04	12	mm			6	$ 0.24
								Sub Total	**$ 0.66**

University	Ecole Centrale de Lyon			**Car #**	81	**Part Cost**	$ 6.03
System	Brake system	**FileLink1**				**Qty**	2
Assembly	Front brake Rotor	**FileLink2**		**FileLink1**			
Part	Brake Rotor	**FileLink3**		**FileLink2**		**Extended Cost**	$ 12.06
P/N Base	01001			**FileLink3**			
Suffix	AA						
Details	Cast iron brake disc						

ItemOrder	Material	Use	UnitCost	Size1	Unit1	Size2	Unit2	Area Name	Area	Length	Density	Quantity	Sub Total
10	Cast Iron (per kg)	Stock material for brake rotor	$ 1.00	116	mm			circle area	4.23E-02	0.005	7 000	1.33E+00	$ 1.33
												Sub Total	**$ 1.33**

ItemOrder	Process	Use	UnitCost	Unit	Quantity	Multiplier	Mult. Val.	Sub Total
10	Machining Setup, Install and remove	Setup for laser cut	$ 1.30	unit	1			$ 1.30
20	Laser Cut	Cutout shape	$ 0.01	cm	136	Material - Cast Iron	2.5	$ 3.40
							Sub Total	**$ 4.70**

University	Ecole Centrale de Lyon			**Car #**	81	**Part Cost**	$ 7.63
System	Brake system	**FileLink1**				**Qty**	2
Assembly	Front brake Rotor	**FileLink2**		**FileLink1**			
Part	Brake Shrink Disc	**FileLink3**		**FileLink2**		**Extended Cost**	$ 15.26
P/N Base	01002			**FileLink3**			
Suffix	AA						
Details	Allows brake rotor to be mounted floating						

ItemOrder	Material	Use	UnitCost	Size1	Unit1	Size2	Unit2	Area Name	Area	Length	Density	Quantity	Sub Total
10	Steel, Mild (per kg)	stock material for brake shrink disc	$ 2.25	165	mm			circle area	2.14E-02	0.005	7860	8.40E-01	$ 1.89
												Sub Total	**$ 1.89**

ItemOrder	Process	Use	UnitCost	Unit	Quantity	Multiplier	Mult. Val.	Sub Total
10	Machining Setup, Install and remove	Setup for laser cut	$ 1.30	unit	1			$ 1.30
20	Laser Cut	Cutout shape	$ 0.01	cm	148	Material - Cast Iron	3	$ 4.44
							Sub Total	**$ 5.74**

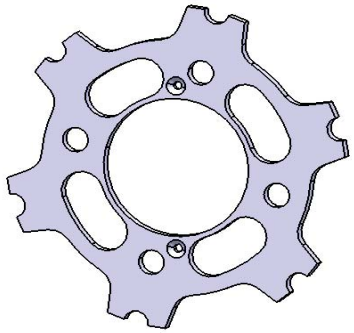

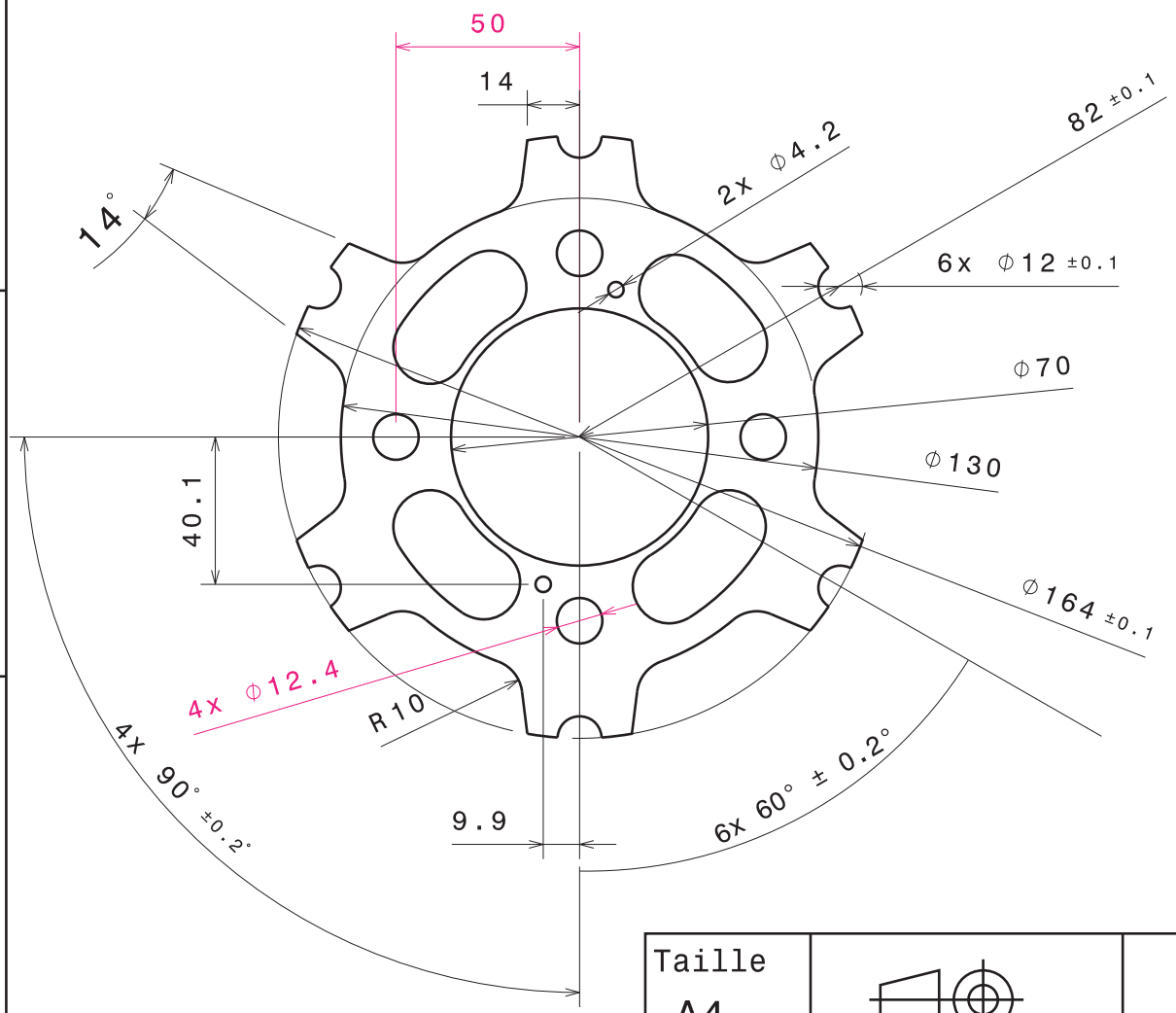

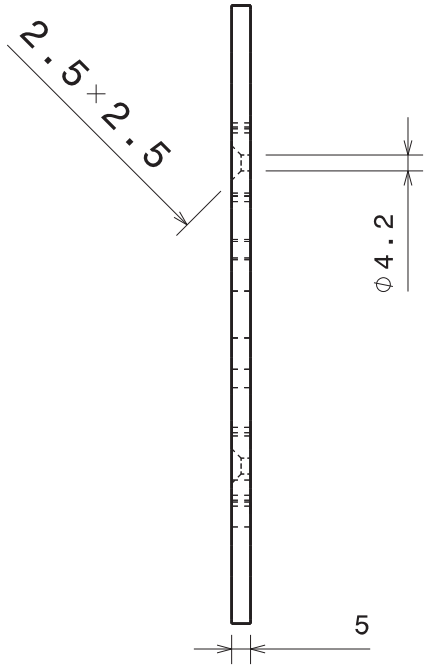

Tolérances générales ISO 2768 - mK

Taille A4		Ecurie Piston Sport Auto
Dessiné par Thomas Derouin	Date 14/01/2014	Désignation Frette Disque de frein
Coordonnées 06 50 61 35 55 thomas.derouin@ecl2015.ec-lyon.fr		
		Quantité 6 / Matériau Acier / Version 1.0
		Echelle 1:2 / Numéro du plan / Feuille 1/1

University	Ecole Centrale de Lyon			**Car #**	81	**Part Cost**	$ 83.00
System	Brake system	**FileLink1**				**Qty**	2
Assembly	Front brake Rotor	**FileLink2**		**FileLink1**			
Part	Brake Caliper	**FileLink3**		**FileLink2**		**Extended Cost**	$ 166.00
P/N Base	01003			**FileLink3**			
Suffix	AA						
Details	Beringer 2D1						

ItemOrder	Material	Use	UnitCost	Size1	Unit1	Size2	Unit2	Area Name	Area	Length	Density	Quantity	Sub Total
10	Brake Caliper, Beringer, 2D1	Brake Caliper	$ 83.00									1	$ 83.00
												Sub Total	**$ 83.00**

University	Ecole Centrale de Lyon			**Car #**	81	**Part Cost**	$ 0.96
System	Brake system	**FileLink1**				**Qty**	4
Assembly	Front brake Rotor	**FileLink2**		**FileLink1**			
Part	Brake pad	**FileLink3**		**FileLink2**		**Extended Cost**	$ 3.84
P/N Base	01004			**FileLink3**			
Suffix	AA						
Details	Beringer 2547S						

ItemOrder	Material	Use	UnitCost	Size1	Unit1	Size2	Unit2	Area Name	Area	Length	Density	Quantity	Sub Total
10	Brake Pad, Iron or Steel Rotor	Brake pad	$ 0.0002	40	mm	40	mm	rectangular area	1.60E-03	0.003		1	$ 0.96
												Sub Total	**$ 0.96**

University	Ecole Centrale de Lyon			**Car #**	81	**Part Cost**	$ 1.34
System	Brake system	**FileLink1**				**Qty**	12
Assembly	Front brake Rotor	**FileLink2**		**FileLink1**			
Part	Brake rotor button	**FileLink3**		**FileLink2**		**Extended Cost**	$ 16.14
P/N Base	01005			**FileLink3**			
Suffix	AA						
Details	Button used to assemble floating rotor on shrink disc						

ItemOrder	Material	Use	UnitCost	Size1	Unit1	Size2	Unit2	Area Name	Area	Length	Density	Quantity	Sub Total
10	Steel, Mild	Material for part	$ 2.25	6	mm			Round, radius 6mm	1.13E-04	8.00E-03	7 810.00	1	$ 0.02
												Sub Total	**$ 0.02**

ItemOrder	Process	Use	UnitCost	Unit	Quantity	Multiplier	Mult. Val.	Sub Total
10	Machining Setup, Install and remove		$ 1.30	unit	1			$ 1.30
20	Machining		$ 0.04	cm^3	0.24	Material - steel	3	$ 0.03
							Sub Total	**$ 1.33**

University	Ecole Cenrale de Lyon	**Car #**	81	**Asm Cost**	$ 110.95
System	Brake System			**Qty**	2
Assembly	Rear brake rotor	**FileLink1**			
P/N Base	A0002	**FileLink2**		**Extended Cost**	$ 221.90
Suffix	AA	**FileLink3**			
Details	Rear Brake Rotor Assembly				

ItemOrder	Part	Part Cost	Quantity	Sub Total
10	Brake Rotor	$ 6.03	1	$ 6.03
20	Brake Shrink Disc	$ 7.63	1	$ 7.63
30	Brake Caliper	$ 83.00	1	$ 83.00
40	Brake pad	$ 0.96	2	$ 1.92
50	Brake Rotor button	$ 1.34	6	$ 8.04
			Sub Total	**$ 106.62**

ItemOrder	Process	Use	UnitCost	Unit	Quantity	Multiplier	Mult. Val.	Sub Total
10	Assemble,1kg, Line on Line	Line up Pads	$ 0.13	unit	1			$ 0.13
20	Assemble, 1 kg, Loose	Put calipers in place	$ 0.06	unit	1			$ 0.06
30	Ratchet <= 25.4 mm	Bolt calipers to upright	$ 0.75	unit	2			$ 1.50
40	Reaction Tool <= 25.4 mm	Tighten the M8 nuts	$ 0.25	unit	2			$ 0.50
50	Assemble,1kg, Line on Line	Assemble Brake Rotors and Shrink discs	$ 0.13	Unit	1			$ 0.13
60	Assemble,1kg, Loose	Insert buttons and washers	$ 0.06	Unit	6			$ 0.36
70	Assemble,1kg, Line on Line	Retaining rings	$ 0.13	Unit	6			$ 0.78
80	Assemble,1kg, Line on Line	Assemble Brake Rotor onto hub	$ 0.13	Unit	1			$ 0.13
							Sub Total	**$ 3.59**

ItemOrder	Fastener	Use	UnitCost	Size1	Unit1	Size2	Unit2	Quantity	Sub Total
10	Bolt,Grade 8.8 (SAE)	Calipers in Uprights	$ 0.14	8	mm	35	mm	2	$ 0.28
20	Washer, Grade 8.8 (SAE 5)	Calipers in Uprights	$ 0.01	8	mm			2	$ 0.02
30	Nut, Grade 8.8 (SAE 5)	Calipers in Uprights	$ 0.04	8	mm			2	$ 0.08
40	Washer, Grade 8.8 (SAE 5)	Assemble Brake Rotors and Shrink discs	$ 0.01	12	mm			12	$ 0.12
50	Retaining Ring, External	Assemble Brake Rotors and Shrink discs	$ 0.04	12	mm			6	$ 0.24
								Sub Total	**$ 0.74**

University	Ecole Centrale de Lyon			**Car #**	81	**Part Cost**	$ 6.03
System	Brake system	**FileLink1**				**Qty**	2
Assembly	Rear brake Rotor	**FileLink2**		**FileLink1**			
Part	Brake Rotor	**FileLink3**		**FileLink2**		**Extended Cost**	$ 12.06
P/N Base	02001			**FileLink3**			
Suffix	AA						
Details	Cast iron brake disc						

ItemOrder	Material	Use	UnitCost	Size1	Unit1	Size2	Unit2	Area Name	Area	Length	Density	Quantity	Sub Total
10	Cast Iron (per kg)	Stock material for brake rotor	$ 1.00	116	mm			circle area	4.23E-02	0.005	7 000	1.33	$ 1.33
												Sub Total	**$ 1.33**

ItemOrder	Process	Use	UnitCost	Unit	Quantity	Multiplier	Mult. Val.	Sub Total
10	Machining Setup, Install and remove	Setup for laser cut	$ 1.30	unit	1			$ 1.30
20	Laser Cut	Cutout shape	$ 0.01	cm	136	Material - Cast Iron	2.5	$ 3.40
							Sub Total	**$ 4.70**

University	Ecole Centrale de Lyon			**Car #**	81	**Part Cost**	$ 7.63
System	Brake system	**FileLink1**				**Qty**	2
Assembly	Rear brake Rotor	**FileLink2**		**FileLink1**			
Part	Brake Shrink Disc	**FileLink3**		**FileLink2**		**Extended Cost**	$ 15.26
P/N Base	02002			**FileLink3**			
Suffix	AA						
Details	Allows brake rotor to be mounted floating						

ItemOrder	Material	Use	UnitCost	Size1	Unit1	Size2	Unit2	Area Name	Area	Length	Density	Quantity	Sub Total
10	Steel, Mild (per kg)	Stock material for brake shrink disc	$ 2.25	165	mm			circle area	2.14E-02	0.005	7860	8.40E-01	$ 1.89
												Sub Total	**$ 1.89**

ItemOrder	Process	Use	UnitCost	Unit	Quantity	Multiplier	Mult. Val.	Sub Total
10	Machining Setup, Install and remove	Setup for laser cut	$ 1.30	unit	1			$ 1.30
20	Laser Cut	Cutout shape	$ 0.01	cm	148	Material - Cast Iron	3	$ 4.44
							Sub Total	**$ 5.74**

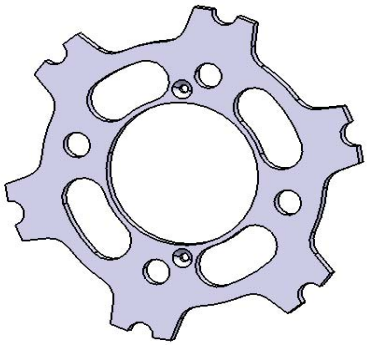

University	Ecole Centrale de Lyon			**Car #**	81	**Part Cost**	$ 83.00
System	Brake system	**FileLink1**				**Qty**	2
Assembly	Rear brake Rotor	**FileLink2**		**FileLink1**			
Part	Brake Caliper	**FileLink3**		**FileLink2**		**Extended Cost**	$ 166.00
P/N Base	02003			**FileLink3**			
Suffix	AA						
Details	Beringer 2D1						

ItemOrder	Material	Use	UnitCost	Size1	Unit1	Size2	Unit2	Area Name	Area	Length	Density	Quantity	Sub Total
10	Brake Caliper, Beringer, 2D1	Brake Caliper	$ 83.00									1	$ 83.00
												Sub Total	**$ 83.00**

University	Ecole Centrale de Lyon			**Car #**	81	**Part Cost**	$ 0.96
System	Brake system	**FileLink1**				**Qty**	4
Assembly	Rear brake Rotor	**FileLink2**		**FileLink1**			
Part	Brake pad	**FileLink3**		**FileLink2**		**Extended Cost**	$ 3.84
P/N Base	02004			**FileLink3**			
Suffix	AA						
Details	Beringer 2547S						

ItemOrder	Material	Use	UnitCost	Size1	Unit1	Size2	Unit2	Area Name	Area	Length	Density	Quantity	Sub Total
10	Brake Pad, Iron or Steel Rotor	Brake pad	$ 0.0002	40	mm	40	mm	rectangular area	1.60E-03	0.003		1	$ 0.96
												Sub Total	**$ 0.96**

University	Ecole Centrale de Lyon			**Car #**	81	**Part Cost**	$ 1.34
System	Brake system	**FileLink1**				**Qty**	12
Assembly	Rear brake Rotor	**FileLink2**		**FileLink1**			
Part	Brake rotor button	**FileLink3**		**FileLink2**		**Extended Cost**	$ 16.14
P/N Base	02005			**FileLink3**			
Suffix	AA						
Details	Button used to assemble floating rotor on shrink disc						

ItemOrder	Material	Use	UnitCost	Size1	Unit1	Size2	Unit2	Area Name	Area	Length	Density	Quantity	Sub Total
10	Steel, Mild	Material for part	$ 2.25	6	mm			Round, radius 6mm	1.13E-04	8.00E-03	7 810.00	1	$ 0.02
												Sub Total	**$ 0.02**

ItemOrder	Process	Use	UnitCost	Unit	Quantity	Multiplier	Mult. Val.	Sub Total
10	Machining Setup, Install and remove		$ 1.30	unit	1			$ 1.30
20	Machining		$ 0.04	cm^3	0.24	Material - steel	3	$ 0.03
							Sub Total	**$ 1.33**

University	Ecole Centrale de Lyon	**Car #**	81	**Asm Cost**	$ 690.71
System	Brake System			**Qty**	1
Assembly	Brake circuit	**FileLink1**			
P/N Base	A0003	**FileLink2**		**Extended Cost**	$ 690.71
Suffix	AA	**FileLink3**			
Details	Brake Line Assembly				

ItemOrder	Part	Part Cost	Quantity	Sub Total
10	Brake reservoir tab	$ 2.06	1	$ 2.05
20	Brake reservoir mount	$ 2.07	1	$ 2.07
30	Master Cylinder	$ 97.00	2	$ 194.00
40	Balance Bar	$ 30.00	1	$ 30.00
50	Tee mount	$ 2.05	1	$ 2.05
60	Proportionning valve mount	$ 2.49	1	$ 2.49
			Sub Total	**$ 232.66**

ItemOrder	Material	Use	UnitCost	Size1	Unit1	Size2	Unit2	Area Name	Area	Length	Density	Quantity	Sub Total
10	Paint	Protect steel tabs and mounts from rust	$ 10.00	0.022	m^2							1	$ 0.22
20	Banjo Fitting, 45 Deg., Aluminum	Brake line	$ 9.80	6.35	mm							6	$ 62.23
30	Banjo Fitting, Aluminum	Brake line	$ 7.85	6.35	mm							2	$ 49.85
40	Banjo Bolt, Aluminum	Brake line	$ 6.80	10	mm							12	$ 68.00
50	Fitting/L.P./Tee/Flare-Flare-Pipe/Steel/	Tee to split the right and left brake line	$ 10.17	6.35	mm							1	$ 64.58
60	Fitting/H.P./Straight//Steel/	Brake line	$ 6.80	6.5	mm							3	$ 44.20
70	Brake Light Pressure Switch Banjo Bolt	Brake light	$ 8.00									1	$ 8.00
80	Crush Washer	Brake line	$ 0.30	6.5	mm							18	$ 1.92
90	Hydraulic Fluid Reservoir, Remote (Plastic)	Brake fluid reservoir	$ 5.00									2	$ 10.00
100	Hose, High Pressure, Stainless Steel Braided Outer	Brake line between Master Cylinder and calipers	$ 13.22	6.45	mm							6.3	$ 85.27
110	Hose, Rubber	Brake line between Master Cylinder and	$ 2.34	0.3	m							2	$ 0.70
120	Heat Shrink Tubing	To put on the end of the HP Hose	$ 0.50	0.6	m							1	$ 0.30
130	Fluid,Oil	Hydraulic (brake)	$ 0.75	0.75	liter							1	$ 0.56
												Sub Total	**$ 395.83**

ItemOrder	Process	Use	UnitCost	Unit	Quantity	Multiplier	Mult. Val.	Sub Total
10	Weld	Weld proportionning valve mount to frame	$ 0.15	cm	2.5		1	$ 0.38
20	Weld	Weld brake reservoir tab to frame	$ 0.15	cm	2.5		1	$ 0.38
30	Aerosol apply	Paint steel tabs and mounts	$ 5.25	m^2	0.022		1	$ 0.12
40	Assemble, 1 kg, Loose	Fix Brake reservoir mount to brake reservoir tab	$ 0.06	unit	1		1	$ 0.06
50	Riveting	Fix Brake reservoir mount to brake reservoir tab	$ 0.25	unit	2		1	$ 0.50
60	Assemble, 1 kg, Loose	Assemble brake fluid reservoirs on reservoir mount	$ 0.06	unit	2		1	$ 0.12
70	Ratchet <= 6.35 mm	Bolt brake fluid reservoirs to reservoir mount	$ 0.50	unit	2		1	$ 1.00
80	Reaction Tool <= 6.35 mm	Reaction tool for M6 nuts	$ 0.25	unit	2		1	$ 0.50
90	Assemble, 1 kg, Loose	Fix tee mount on the frame	$ 0.06	unit	1		1	$ 0.06
100	Ratchet <= 25.4 mm	Bolt tee mount to frame	$ 0.75	unit	2		1	$ 1.50
110	Reaction Tool <= 25.4 mm	Reaction tool for M8 nuts	$ 0.25	unit	2		1	$ 0.50
120	Assemble, 1 kg, Loose	fix tee on the tee tab	$ 0.06	unit	1		1	$ 0.06
130	Ratchet <= 6.35 mm	Bolt tee mount to frame	$ 0.50	unit	2		1	$ 1.00
140	Reaction Tool <= 6.35 mm	Reaction tool for M6 nuts	$ 0.25	unit	2		1	$ 0.50

150	Ratchet ⊠= 25.4 mm	Banjo Bolts in Master Cylinders and Calipers	$ 0.75	unit	10		1	$ 7.50
160	Tube cut	Brake line between Master Cylinder and calipers	$ 0.15	cm	2	Repeat 12	12	$ 3.60
170	Cut(scissors,knife)	Cut the Heat Shrink tubing to lengh	$ 0.06	cm	2	Repeat 12	12	$ 1.44
180	Hand, Tight <= 6.35 mm	Put the hose in the banjos	$ 0.50	unit	12		1	$ 6.00
190	Wrench <= 25.4 mm	Tighten the banjos	$ 1.50	unit	12		1	$ 18.00
200	Reaction Tool <= 25.4 mm	Reaction tool to lock the banjos	$ 0.25		12		1	$ 3.00
210	Shrink Tube	Shrink tube on HP hose	$ 0.15	cm	60		1	$ 9.00
220	Cut(scissors,knife)	Brake line between Master Cylinder and Reservoirs	$ 0.06	cm	4.1	Repeat 2	2	$ 0.49
230	Screwdriver > 1 Turn	Tighten hose clamps - worm drive	$ 0.19	unit	4		1	$ 0.76
240	Install Tie Wrap (Zip Tie, Cable Clamp)	Fix the brake on the frame and the A-arms	$ 0.09	unit	17		1	$ 1.59
							Sub Total	**$ 58.05**

ItemOrder	Fastener	Use	UnitCost	Size1	Unit1	Size2	Unit2	Quantity	Sub Total
10	Bolt, Grade 8.8 (SAE 5)	Fix brake fluid reservoirs to reservoir mount	$ 0.04	6	mm	16	mm	2	$ 0.08
20	Nut, Grade 8.8 (SAE 5)	Fix brake fluid reservoirs to reservoir mount	$ 0.03	6	mm			2	$ 0.06
30	Washer, Grade 8.8 (SAE 5)	Fix brake fluid reservoirs to reservoir mount	$ 0.01	6	mm			4	$ 0.04
40	Bolt, Grade 8.8 (SAE 5)	Fix tee tab to frame	$ 0.04	6	mm	16	mm	1	$ 0.04
50	Nut, Grade 8.8 (SAE 5)	Fix tee tab to frame	$ 0.03	6	mm			1	$ 0.03
60	Washer, Grade 8.8 (SAE 5)	Fix tee tab to frame	$ 0.01	6	mm			2	$ 0.02
70	Bolt, Grade 8.8 (SAE 5)	Fix front tee to tee tab	$ 0.26	8	mm			1	$ 0.26
80	Nut, Grade 8.8 (SAE 5)	Fix front tee to tee tab	$ 0.04	8	mm			2	$ 0.08
90	Washer, Grade 8.8 (SAE 5)	Fix front tee to tee tab	$ 0.01	8	mm			1	$ 0.01
100	Hose Clamp, Worm Drive	Brake line between Master Cylinder and Reservoirs	$ 0.55	13	mm			4	$ 2.20
110	Tie Wrap	fix the brake line and the rear tee	$ 0.04					17	$ 0.68
								Sub Total	**$ 3.50**

ItemOrder	Tooling	Use	UnitCost	Unit	Quantity	PVF	FracIncld	Sub Total
10	Welds - Welding Fixture	Parts welded to frame	$ 500.00	point	4	3000	1	$ 0.67
							Sub Total	**$ 0.67**

University	Ecole Centrale de Lyon			**Car #**	81	**Part Cost**	$ 2.06
System	Brake system	**FileLink1**				**Qty**	1
Assembly	Brake circuit	**FileLink2**		**FileLink1**			
Part	Brake reservoir tab	**FileLink3**		**FileLink2**		**Extended Cost**	$ 2.06
P/N Base	03001			**FileLink3**			
Suffix	AA						
Details	Steel tab welded to chassis						

ItemOrder	Material	Use	UnitCost	Size1	Unit1	Size2	Unit2	Area Name	Area	Length	Density	Quantity	Sub Total
10	Steel (per kg)	Material for part	$ 2.25	50	mm	30	mm	Rectangular area 50mm x 30mm	1.50E-04	0.001	8 010.00	1	$ 0.01
												Sub Total	**$ 0.01**

ItemOrder	Process	Use	UnitCost	Unit	Quantity	Multiplier	Mult. Val.	Sub Total
10	Machining Setup, Install and remove	Install and remove part from laser machine	$ 1.30	unit	1			$ 1.30
20	Laser cut	cutout the outline and holes	$ 0.01	cm	16.6	Material - Steel	3	$ 0.50
30	Sheet metal bends	for edge bends	$ 0.25	bend	1			$ 0.25
							Sub Total	**$ 2.05**

University	Ecole Centrale de Lyon			**Car #**	81	**Part Cost**	$ 2.07
System	Brake system	**FileLink1**				**Qty**	1
Assembly	Brake Circuit	**FileLink2**		**FileLink1**			
Part	Brake reservoir mount	**FileLink3**		**FileLink2**		**Extended Cost**	$ 2.07
P/N Base	03002			**FileLink3**			
Suffix	AA						
Details	Aluminium part to hold reservoirs						

ItemOrder	Material	Use	UnitCost	Size1	Unit1	Size2	Unit2	Area Name	Area	Length	Density	Quantity	Sub Total
10	Aluminium, normal (per kg)	Material for part	$ 4.20	70	mm	40	mm	Rectangular area 70mm x 40mm	2.80E-04	0.002	2 710.00	1	$ 0.01
												Sub Total	**$ 0.01**

ItemOrder	Process	Use	UnitCost	Unit	Quantity	Multiplier	Mult. Val.	Sub Total
10	Machining Setup, Install and remove	Install and remove part from laser machine	$ 1.30	unit	1			$ 1.30
20	Laser cut	Cutout the outline and holes	$ 0.01	cm	26.3	Material - Aluminium	1	$ 0.26
30	Sheet metal bends	For edge bends	$ 0.25	bend	2			$ 0.50
							Sub Total	**$ 2.06**

University	Ecole Centrale de Lyon			**Car #**	81	**Part Cost**	$ 97.00
System	Brake system	**FileLink1**				**Qty**	2
Assembly	Brake Circuit	**FileLink2**		**FileLink1**			
Part	Master Cylinder	**FileLink3**		**FileLink2**		**Extended Cost**	$ 194.00
P/N Base	03003			**FileLink3**			
Suffix	AA						
Details	In reality the Beringer MC 12.7 was used, but as it is not in the cost tables the AP CP3756 master cylinder was chosen as it has similar characteristics						

ItemOrder	Material	Use	UnitCost	Size1	Unit1	Size2	Unit2	Area Name	Area	Length	Density	Quantity	Sub Total
10	Master Cylinder, AP, CP3756	Brake master cylinder	$ 97.00		unit							1	97.00
												Sub Total	**$ 97.00**

University	Ecole Centrale de Lyon			**Car #**	81	**Part Cost**	$ 30.00
System	Brake system	**FileLink1**				**Qty**	1
Assembly	Brake Circuit	**FileLink2**		**FileLink1**			
Part	Master Cylinder	**FileLink3**		**FileLink2**		**Extended Cost**	$ 30.00
P/N Base	03004			**FileLink3**			
Suffix	AA						
Details	Brake balance bar, assembly cost included in Pedal Assembly						

ItemOrder	Material	Use	UnitCost	Size1	Unit1	Size2	Unit2	Area Name	Area	Length	Density	Quantity	Sub Total
10	Balance Bar, Tilton, 72-250	Balance bar for brake bias	$ 30.00		unit							1	30.00
												Sub Total	**$ 30.00**

University	Ecole Centrale de Lyon			**Car #**	81	**Part Cost**	$ 2.05
System	Brake system	**FileLink1**				**Qty**	1
Assembly	Brake Circuit	**FileLink2**		**FileLink1**			
Part	Tee mount	**FileLink3**		**FileLink2**		**Extended Cost**	$ 2.05
P/N Base	03005			**FileLink3**			
Suffix	AA						
Details							

ItemOrder	Material	Use	UnitCost	Size1	Unit1	Size2	Unit2	Area Name	Area	Length	Density	Quantity	Sub Total
10	Aluminum, Normal	Tee tab	$ 4.20	92	mm	32	mm	rectangular area 92mm x 32mm	2.94E-05	0.002	2710	1	$ 0.00
												Sub Total	**$ 0.00**

ItemOrder	Process	Use	UnitCost	Unit	Quantity	Multiplier	Mult. Val.	Sub Total
10	Machining Setup, Install and remove		1.30 €	unit	1			$ 1.30
20	Laser Cut	Outer profile	$ 0.01	cm	24.8	Material - Aluminum	1	$ 0.25
30	Sheet metal bends		$ 0.25	bend	2			$ 0.50
							Sub Total	**$ 2.05**

University	Ecole Centrale de Lyon			**Car #**	11	**Part Cost**	$ 2.49
System	Brake system	**FileLink1**				**Qty**	1
Assembly	Brake Circuit	**FileLink2**		**FileLink1**			
Part	Proportioning Valve mount	**FileLink3**		**FileLink2**		**Extended Cost**	$ 2.49
P/N Base	03006			**FileLink3**			
Suffix	AA						
Details	Allows for insallation of an optional proportioning valve						

ItemOrder	Material	Use	UnitCost	Size1	Unit1	Size2	Unit2	Area Name	Area	Length	Density	Quantity	Sub Total
10	Steel, mild	Proportionning valve mount	$ 2.25	77.5	mm	76	mm	Rectangular area 77,5mm x 76mm	5.89E-03	0.00	7 860.00	1	$ 0.16
												Sub Total	**$ 0.16**

ItemOrder	Process	Use	UnitCost	Unit	Quantity	Multiplier	Mult. Val.	Sub Total
10	Machining Setup, Install and remove		$ 1.30	unit	1			$ 1.30
20	Laser Cut	Tab for the proportionning Valve	$ 0.01	cm	69.37	Material -steel	3	$ 2.08
30	Sheet metal bends	Tab for the proportionning Valve	$ 0.25	bend	1			$ 0.25
							Sub Total	**$ 2.33**

ENGINE AND DRIVETRAIN

EPSA TEAM CAR # 81

University	Ecole Centrale de Lyon	**Car #**	81	**Asm Cost**	$ 1 713.88
System	Engine and drivetrain			**Qty**	1
Assembly	Engine	**FileLink1**			
P/N Base	A0001	**FileLink2**		**Extended Cost**	$ 1 713.88
Suffix	AA	**FileLink3**			
Details					

ItemOrder	Part	Part Cost	Quantity	Sub Total
10	Engine	$ 1 500.00	1	$ 1 500.000
20	Upper mount	$ 8.05	2	$ 16.091
30	Upper axle	$ 4.16	1	$ 4.162
40	Bottom mount	$ 9.80	2	$ 19.608
50	Bottom link	$ 9.86	2	$ 19.728
60	Bottom axle	$ 4.11	1	$ 4.107
70	Front mount	$ 3.02	2	$ 6.032
80	Spacer	$ 1.41	2	$ 2.822
90	Obstruction plate	$ 2.62	2	$ 5.244
			Sub Total	**$ 1 577.79**

ItemOrder	Material	Use	UnitCost	Size1	Unit1	Size2	Unit2	Area Name	Area	Length	Density	Quantity	Sub Total
10	Fluid, Oil	Engine oil	$ 0.75	4	L							4.00	$ 3.00
20	Mount, Vibration-Damping Sandwich	Engine mounts	$ 6.75	25	mm							6.00	$ 40.50
30	Paint	Mount painting	$ 10.00	0.035	m^2							0.035	$ 0.35
												Sub Total	**$ 43.85**

ItemOrder	Process	Use	UnitCost	Unit	Quantity	Multiplier	Mult. Val.	Sub Total
10	Welds	Upper mounts welding on frame	$ 0.15	cm	35			$ 5.25
20	Welds	Bottom mounts welding on frame	$ 0.15	cm	32			$ 4.80
30	Welds	Front mounts welding on frame	$ 0.15	cm	26			$ 3.90
40	Aerosol Apply	Mount painting	$ 5.25	m^2	0.035			$ 0.18
50	Assemble, 1 kg, Interference	Assemble 6 vibration-damping sandwich	$ 0.19	unit	6			$ 1.14
60	Assemble, >20 kg, Interference	Assemble engine in chassis	$ 5.63	unit	1			$ 5.63
70	Assemble, 1 kg, Line-on-Line	Assemble upper axle	$ 0.13	unit	1			$ 0.13
80	Ratchet <= 25.4 mm	Tighten upper axle M12 nuts	$ 0.75	unit	2			$ 1.50
90	Reaction Tool <= 25.4 mm	Reaction tool for M12 nut	$ 0.25	unit	2			$ 0.50
100	Assemble, 1 kg, Line-on-Line	Put spacers	$ 0.13	unit	2			$ 0.26
110	Ratchet <= 25.4 mm	Tighten front mount M12 nut	$ 0.75	unit	2			$ 1.50
120	Reaction Tool <= 25.4 mm	Reaction tool for M12 nut	$ 0.25	unit	2			$ 0.50
130	Assemble, 1 kg, Loose	Bottom links assembly	$ 0.06	unit	2			$ 0.12
140	Ratchet <= 25.4 mm	Tighten bottom link nut	$ 0.75	unit	4			$ 3.00
150	Reaction Tool <= 25.4 mm	Reaction tool for M8 nut	$ 0.75	unit	4			$ 3.00
160	Assemble, 1 kg, Line-on-Line	Assemble bottom axle	$ 0.13	unit	1			$ 0.13
170	Ratchet <= 25.4 mm	Tighten bottom axle M12 nuts	$ 0.75	unit	2			$ 1.50
180	Reaction Tool <= 25.4 mm	Reaction tool for M12 nut	$ 0.25	unit				$ -
190	Engine first start, includes fuel		$ 50.00	unit	1			$ 50.00
							Sub Total	**$ 83.04**

ItemOrder	Fastener	Use	UnitCost	Size1	Unit1	Size2	Unit2	Quantity	Sub Total
10	Nut, Grade 8.8	Axle nuts	$ 0.10	12	mm			6	$ 0.60
20	Bolt, Grade 8.8	Front mount blots	$ 1.40	12	mm	110	mm	2	$ 2.80
30	Washer, Grade 8.8		$ 0.01	12	mm			8	$ 0.08
40	Bolt, Grade 8.8	Bottom link bolts	$ 0.12	8	mm	30	mm	4	$ 0.48
50	Nut, Grade 8.8	Bottom link nuts	$ 0.04	8	mm			4	$ 0.16
60	Washer, Grade 8.8		$ 0.01	8	mm			8	$ 0.08
								Sub Total	**$ 4.20**

ItemOrder	Tooling	Use	UnitCost	Unit	Quantity	PVF	FractionIncluded	Sub Total
10	Welds - Welding Fixture	Mounts welding	$ 500.00	point	30	3000	1	$ 5.00
							Sub Total	**$ 5.00**

University	Ecole Centrale de Lyon			**Car #**	81	**Part Cost**	$ 1 500.00
System	Engine and drivetrain	**FileLink1**				**Qty**	1
Assembly	Engine	**FileLink2**		**FileLink1**			
Part	Engine	**FileLink3**		**FileLink2**		**Extended Cost**	$ 1 500.00
P/N Base	01001			**FileLink3**			
Suffix	AA						
Details	There was no modification on the engine excepting the installation of an anti dribble clutch instead of the original one. Honda Engine						

ItemOrder	Material	Use	UnitCost	Size1	Unit1	Size2	Unit2	Area Name	Area	Length	Density	Quantity	Sub Total
10	Engine and Transmission, Ultra High Performance		$ 2.50	600	cc							600	$ 1 500.00
												Sub Total	**$ 1 500.00**

University	Ecole Centrale de Lyon			**Car #**	81	**Part Cost**	$ 8.05
System	Engine and drivetrain	**FileLink1**				**Qty**	2
Assembly	Engine	**FileLink2**		**FileLink1**			
Part	Upper mount	**FileLink3**		**FileLink2**		**Extended Cost**	$ 16.09
P/N Base	01002			**FileLink3**			
Suffix	AA						
Details							

ItemOrder	Material	Use	UnitCost	Size1	Unit1	Size2	Unit2	Area Name	Area	Length	Density	Quantity	Sub Total
10	Steel, Mild	Mounts material	$ 2.25	54	mm	52	mm	Rectangular area 54mm x 52mm	0.00260	0.036	7 860.00	1	$ 1.66
												Sub Total	**$ 1.66**

ItemOrder	Process	Use	UnitCost	Unit	Quantity	Multiplier	Mult. Val.	Sub Total
10	Machining Setup, Install and remove		$ 1.30	unit	1			$ 1.30
20	Machining		$ 0.04	cm^3	32	Material, Steel	3	$ 3.84
30	Machining Setup, Change		$ 0.65	unit	1			$ 0.65
40	Machining		$ 0.04	cm^3	5	Material, Steel	3	$ 0.60
							Sub Total	**$ 6.39**

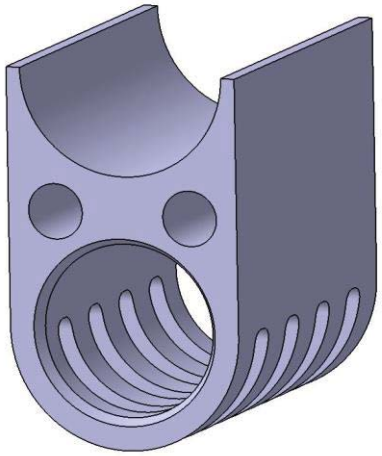

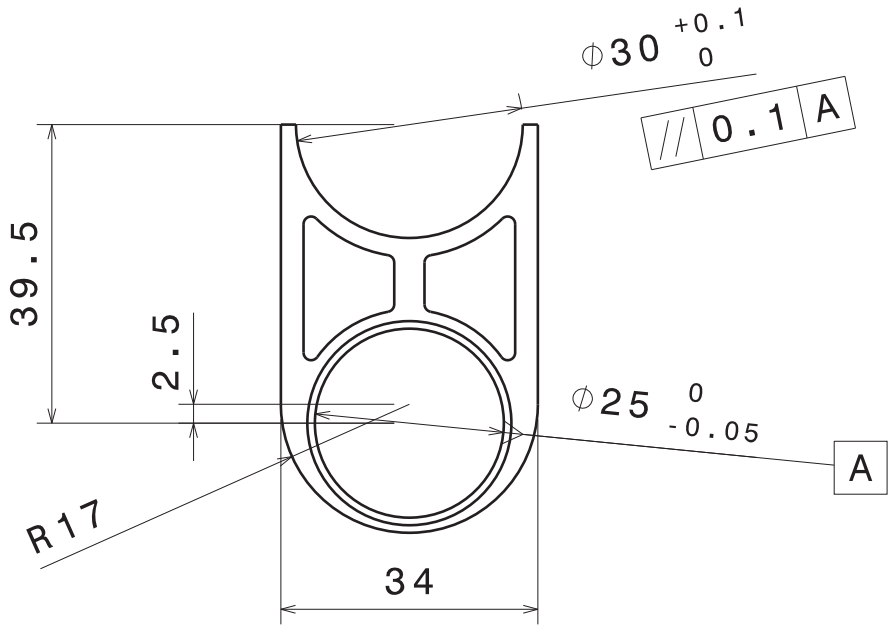

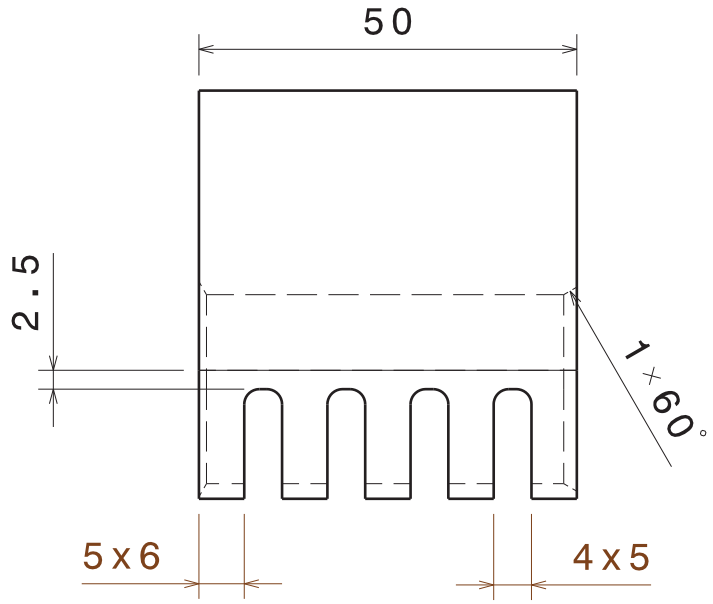

Evidemment à l'appréciation du fabriquant

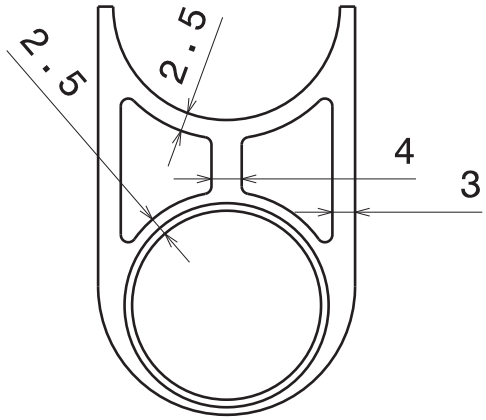

Tolérances générales ISO 2768 - mK

Taille A4		Ecurie Piston Sport Auto
Dessiné par Thomas Derouin	Date 11/11/2013	Désignation: Chape moteur supérieure droite
Coordonnées 06 50 61 35 55 thomas.derouin@ecl2015.ec-lyon.fr		Quantité 1 / Matériau Acier S235 / Version 1.0
Vérifié par	Date	Echelle 1:1 / Numéro du plan 14B010 / Feuille 1/1

University	Ecole Centrale de Lyon			**Car #**	81	**Part Cost**	$ 4.16
System	Engine and drivetrain	**FileLink1**				**Qty**	1
Assembly	Engine	**FileLink2**		**FileLink1**			
Part	Upper axle	**FileLink3**		**FileLink2**		**Extended Cost**	$ 4.16
P/N Base	01003			**FileLink3**			
Suffix	AA						
Details							

ItemOrder	Material	Use	UnitCost	Size1	Unit1	Size2	Unit2	Area Name	Area	Length	Density	Quantity	Sub Total
10	Steel, Mild	Axle material	$ 2.25	14	mm			Round 14mm	0.00015	0.302	7 860.00	1	$ 0.82
												Sub Total	**$ 0.82**

ItemOrder	Process	Use	UnitCost	Unit	Quantity	Multiplier	Mult. Val.	Sub Total
10	Machining Setup, Install and remove		$ 1.30	unit	1			$ 1.30
20	Machining		$ 0.04	cm^3	2	Material, Steel	3	$ 0.24
30	Threading, External (machining)		$ 0.10	cm	6	Material, Steel	3	$ 1.80
							Sub Total	**$ 3.34**

University	Ecole Centrale de Lyon			**Car #**	81	**Part Cost**	$ 9.80
System	Engine and drivetrain	**FileLink1**				**Qty**	2
Assembly	Engine	**FileLink2**		**FileLink1**			
Part	Bottom mount	**FileLink3**		**FileLink2**		**Extended Cost**	$ 19.61
P/N Base	01004			**FileLink3**			
Suffix	AA						
Details							

ItemOrder	Material	Use	UnitCost	Size1	Unit1	Size2	Unit2	Area Name	Area	Length	Density	Quantity	Sub Total
10	Steel, Mild	mount material	$ 2.25	52	mm	42	mm	Rectangular area 52mm x 42mm	0.00218	0.026	7 860.00	1	$ 1.00
												Sub Total	**$ 1.00**

ItemOrder	Process	Use	UnitCost	Unit	Quantity	Multiplier	Mult. Val.	Sub Total
10	Machining Setup, Install and remove		$ 1.30	unit	1			$ 1.30
20	Machining		$ 0.04	cm^3	45	Material, Steel	3	$ 5.40
30	Drilled holes < 25.4 mm dia.		$ 0.35	unit	2	Material, Steel	3	$ 2.10
							Sub Total	**$ 8.80**

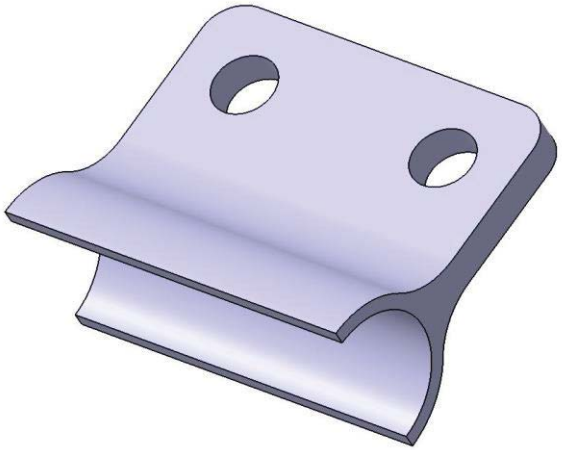

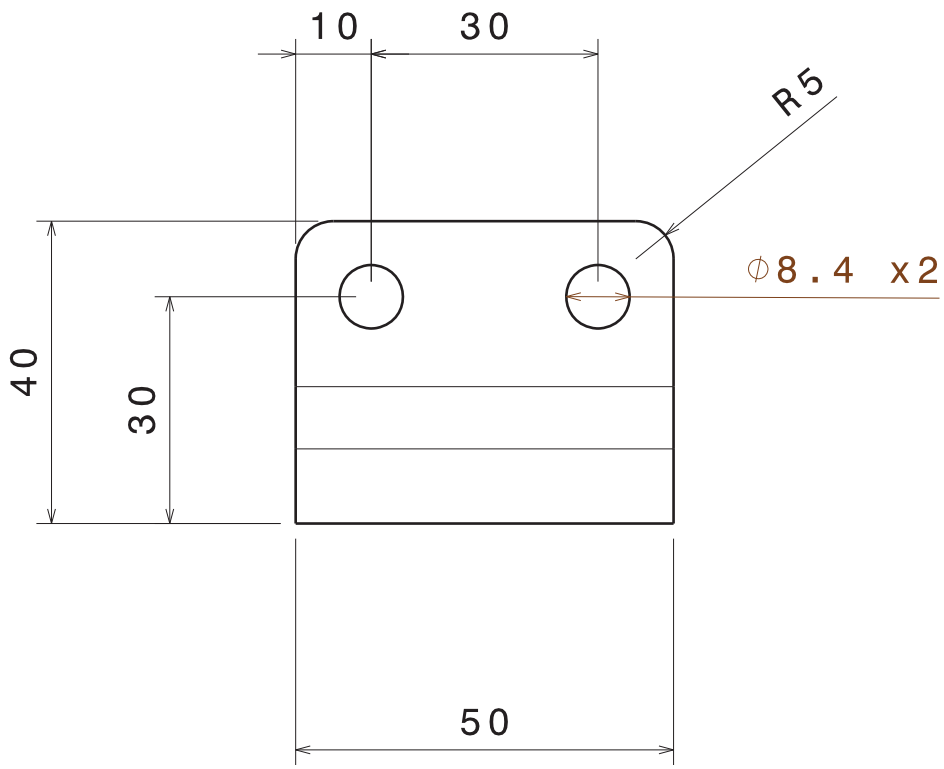

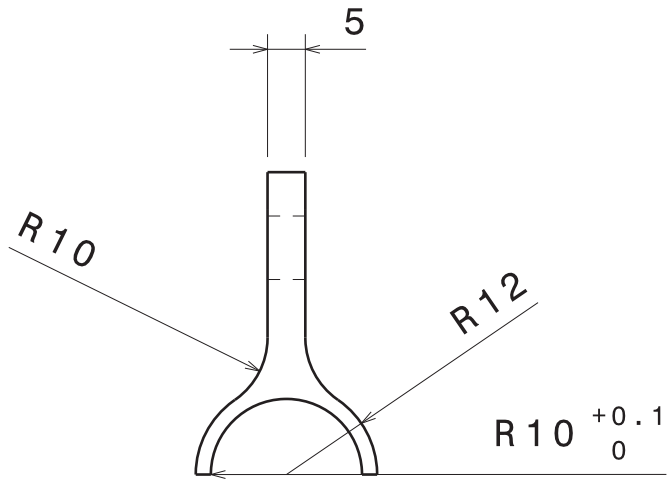

Tolérances générales ISO 2768 - mK

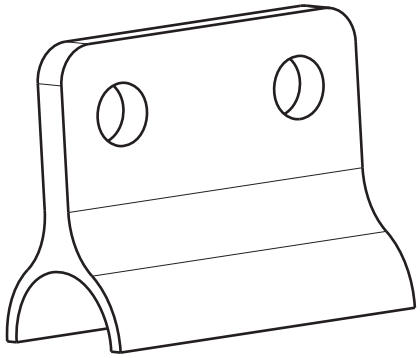

Taille A4		Ecurie Piston Sport Auto
Dessiné par Thomas Derouin	Date 23/11/2013	Désignation Chape moteur inférieure
Coordonnées 06 50 61 35 55 thomas.derouin@ecl2015.ec-lyon.fr		Quantité 2 / Matériau Acier S235 / Version 1.0
Vérifié par	Date	Echelle 1:1 / Numéro du plan 14B011 / Feuille 1/1

University	Ecole Centrale de Lyon			**Car #**	81	**Part Cost**	$ 9.86
System	Engine and drivetrain	**FileLink1**				**Qty**	2
Assembly	Engine	**FileLink2**		**FileLink1**			
Part	Bottom link	**FileLink3**		**FileLink2**		**Extended Cost**	$ 19.73
P/N Base	01005			**FileLink3**			
Suffix	AA						
Details							

ItemOrder	Material	Use	UnitCost	Size1	Unit1	Size2	Unit2	Area Name	Area	Length	Density	Quantity	Sub Total
10	Aluminum, Normal		$ 4.20	100	mm	52	mm	Rectangular area 100mm x 52mm	0.00520	0.032	2 710.00	1	$ 1.89
												Sub Total	**$ 1.89**

ItemOrder	Process	Use	UnitCost	Unit	Quantity	Multiplier	Mult. Val.	Sub Total
10	Machining Setup, Install and remove		$ 1.30	unit	1			$ 1.30
20	Machining		$ 0.04	cm^3	118	Material - Aluminum	1	$ 4.72
30	Machining Setup, Change		$ 0.65	unit	1			$ 0.65
40	Machining		$ 0.04	cm^3	15	Material - Aluminum	1	$ 0.60
50	Drilled holes < 25.4 mm dia.		$ 0.35	unit	2	Material - Aluminum	1	$ 0.70
							Sub Total	**$ 7.97**

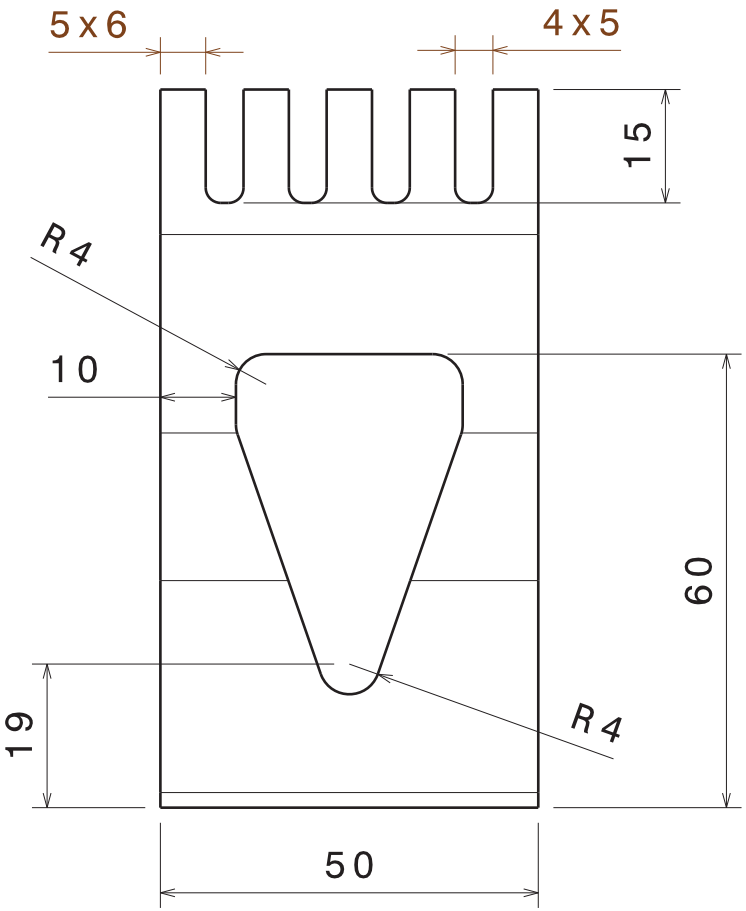

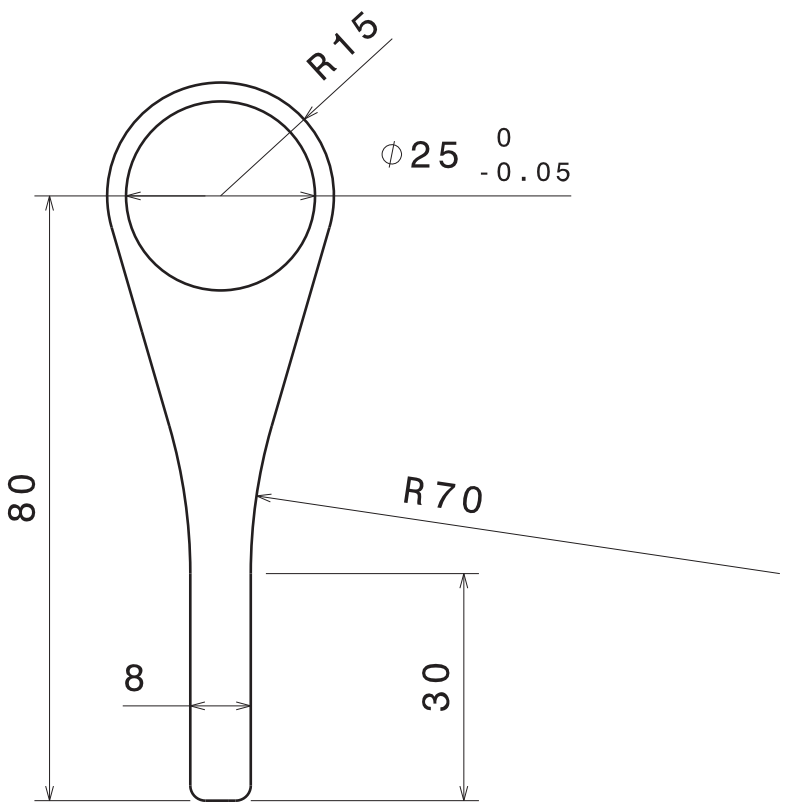

Tolérances générales ISO 2768 - mK

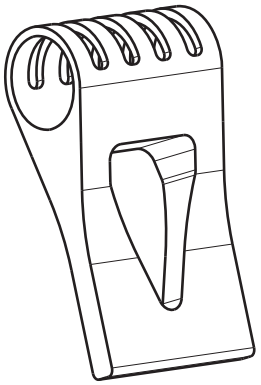

Taille A4		Ecurie Piston Sport Auto
Dessiné par Thomas Derouin	Date 23/11/2013	Désignation: Support moteur inférieur
Coordonnées 06 50 61 35 55 thomas.derouin@ecl2015.ec-lyon.fr		Quantité 2 / Matériau Aluminium 2017 / Version 1.0
Vérifié par	Date	Echelle 1:1 / Numéro du plan 14B055 / Feuille 1/1

40

University	Ecole Centrale de Lyon			**Car #**	81	**Part Cost**	$ 4.11
System	Engine and drivetrain	**FileLink1**				**Qty**	1
Assembly	Engine	**FileLink2**		**FileLink1**			
Part	Bottom axle	**FileLink3**		**FileLink2**		**Extended Cost**	$ 4.11
P/N Base	01006			**FileLink3**			
Suffix	AA						
Details							

ItemOrder	Material	Use	UnitCost	Size1	Unit1	Size2	Unit2	Area Name	Area	Length	Density	Quantity	Sub Total
10	Steel, Mild	Axle material	$ 2.25	14	mm			Round 14mm	0.00015	0.282	7 860.00	1	$ 0.77
												Sub Total	**$ 0.77**

ItemOrder	Process	Use	UnitCost	Unit	Quantity	Multiplier	Mult. Val.	Sub Total
10	Machining Setup, Install and remove		$ 1.30	unit	1			$ 1.30
20	Machining		$ 0.04	cm^3	2	Material, Steel	3	$ 0.24
30	Threading, External (machining)		$ 0.10	cm	6	Material, Steel	3	$ 1.80
							Sub Total	**$ 3.34**

University	Ecole Centrale de Lyon			**Car #**	81	**Part Cost**	$ 3.02
System	Engine and drivetrain	**FileLink1**				**Qty**	2
Assembly	Engine	**FileLink2**		**FileLink1**			
Part	Front mount	**FileLink3**		**FileLink2**		**Extended Cost**	$ 6.03
P/N Base	01007			**FileLink3**			
Suffix	AA						
Details							

ItemOrder	Material	Use	UnitCost	Size1	Unit1	Size2	Unit2	Area Name	Area	Length	Density	Quantity	Sub Total
10	Steel, Mild	Upper mounts	$ 2.25	33	mm			Round 33mm	0.00085	0.050	7 860.00	1	$ 0.76
												Sub Total	**$ 0.76**

ItemOrder	Process	Use	UnitCost	Unit	Quantity	Multiplier	Mult. Val.	Sub Total
10	Machining Setup, Install and remove		$ 1.30	unit	1			$ 1.30
20	Machining		$ 0.04	cm^3	8	Material, Steel	3	$ 0.96
							Sub Total	**$ 2.26**

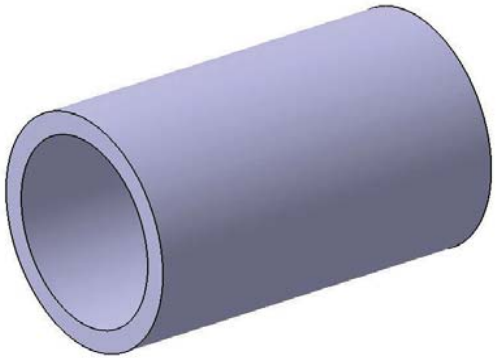

University	Ecole Centrale de Lyon			**Car #**	81	**Part Cost**	$ 1.41
System	Engine and drivetrain	**FileLink1**				**Qty**	2
Assembly	Engine	**FileLink2**		**FileLink1**			
Part	Spacer	**FileLink3**		**FileLink2**		**Extended Cost**	$ 2.82
P/N Base	01008			**FileLink3**			
Suffix	AA						
Details							

ItemOrder	Material	Use	UnitCost	Size1	Unit1	Size2	Unit2	Area Name	Area	Length	Density	Quantity	Sub Total
10	Aluminium, Normal	Spacer material	$ 4.20	20	mm			Round 20mm	0.00010	0.020	2 710.00	1	$ 0.02
												Sub Total	**$ 0.02**

ItemOrder	Process	Use	UnitCost	Unit	Quantity	Multiplier	Mult. Val.	Sub Total
10	Machining Setup, Install and remove		$ 1.30	unit	1			$ 1.30
20	Machining		$ 0.04	cm^3	2.2	Material - Aluminum	1	$ 0.09
							Sub Total	**$ 1.39**

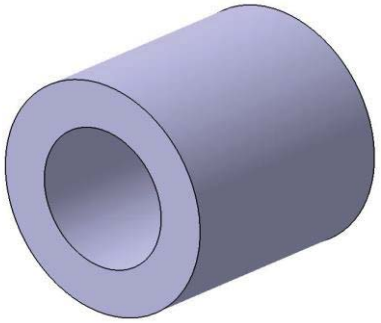

University	Ecole Centrale de Lyon			**Car #**	81	**Part Cost**	$ 2.62
System	Engine and drivetrain	**FileLink1**				**Qty**	2
Assembly	Engine	**FileLink2**		**FileLink1**			
Part	Obstruction plate	**FileLink3**		**FileLink2**		**Extended Cost**	$ 5.24
P/N Base	01009			**FileLink3**			
Suffix	AA						
Details							

ItemOrder	Material	Use	UnitCost	Size1	Unit1	Size2	Unit2	Area Name	Area	Length	Density	Quantity	Sub Total
10	Aluminum, Normal	Plate material	$ 4.20	60	mm	2	mm	Rectangular area 60mm x 2mm	0.00012	0.06	2 710	1	$ 0.08
												Sub Total	**$ 0.08**

ItemOrder	Process	Use	UnitCost	Unit	Quantity	Multiplier	Mult. Val.	Sub Total
10	Machining Setup, Install and remove		$ 1.30	unit	1	Material - Aluminum	1	$ 1.30
20	Laser Cut		$ 0.01	cm	254			$ 2.54
							Sub Total	**$ 2.54**

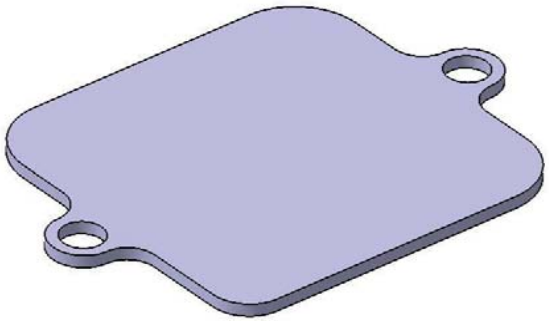

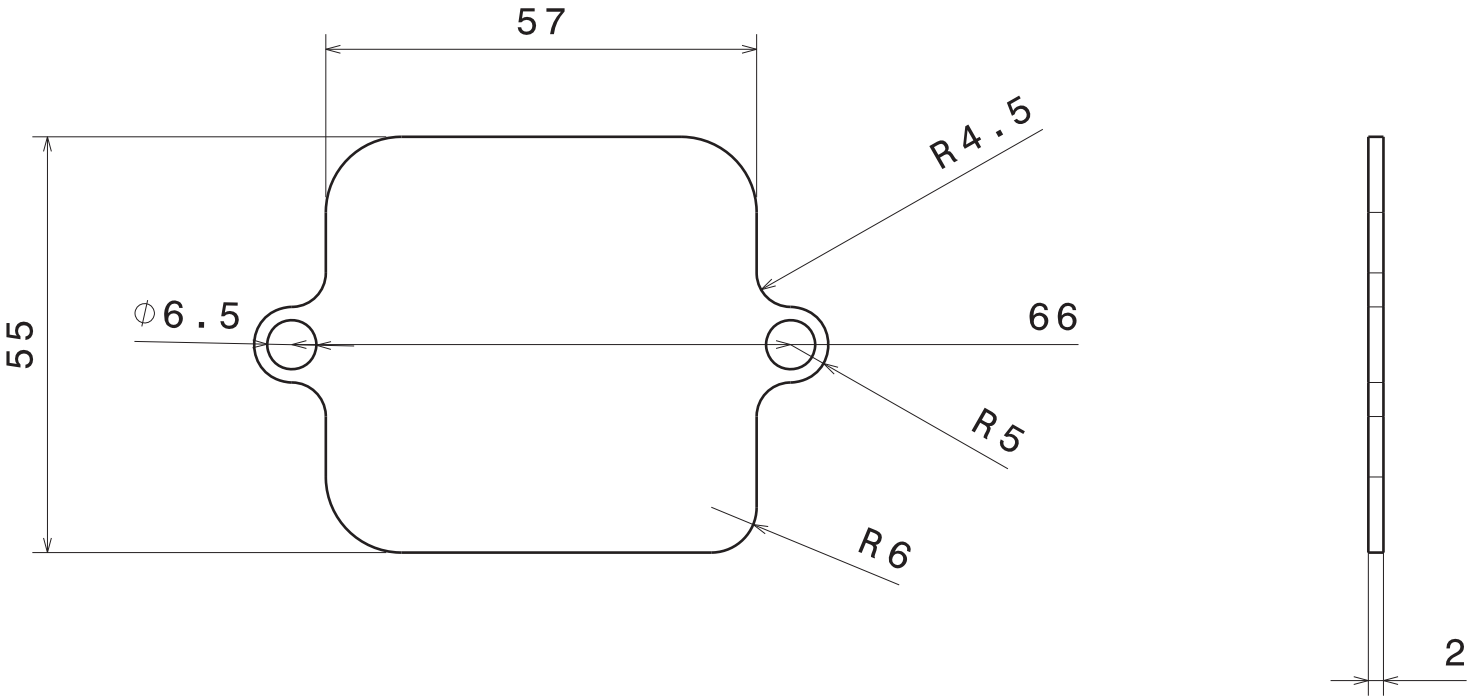

Tolérances générales ISO 2768 - mK

Taille A4		Ecurie Piston Sport Auto
Dessiné par Thomas Derouin	Date 07/12/2013	Désignation Plaque obstruction PAIR
Coordonnées 06 50 61 35 55 thomas.derouin@ecl2015.ec-lyon.fr		Quantité 2 / Matériau Aluminium / Version 1.0
Vérifié par	Date	Echelle 1:1 / Numéro du plan 14M071 / Feuille 1/1

University	Ecole Centrale de Lyon	**Car #**	81	**Asm Cost**	$ 314.77
System	Engine and drivetrain			**Qty**	1
Assembly	Exhaust system	**FileLink1**			
P/N Base	A0002	**FileLink2**		**Extended Cost**	$ 314.77
Suffix	AA	**FileLink3**			
Details					

ItemOrder	Part	Part Cost	Quantity	Sub Total
10	Exhaust tip	$ 4.86	4	$ 19.43
20	Exhaust flange	$ 1.74	4	$ 6.94
30	Exhaust headers	$ 76.75	1	$ 76.75
40	Exhaust primary collector	$ 77.01	1	$ 77.01
50	Exhaust secondary collector	$ 43.82	1	$ 43.82
60	Muffler	$ 42.88	1	$ 42.88
70	Muffler collar	$ 10.66	1	$ 10.66
80	Spacer	$ 1.46	1	$ 1.46
90	Muffler mount	$ 3.86	1	$ 3.86
			Sub Total	**$ 282.81**

ItemOrder	Material	Use	UnitCost	Size1	Unit1	Size2	Unit2	Area Name	Area	Length	Density	Quantity	Sub Total
10	Spring, Tension (General)		$ 1.00									5	$ 5.00
20	Header Wrap		$ 30.00	0.25	m^2							1	$ 7.50
												Sub Total	**$ 12.50**

ItemOrder	Process	Use	UnitCost	Unit	Quantity	Multiplier	Mult. Val.	Sub Total
10	Weld	Tip welding on headers	$ 0.15	cm	40			$ 6.00
20	Assemble, 1 kg, Loose	Assemble flage to headers	$ 0.06	unit	4			$ 0.24
30	Assemble, 1 kg, Line-on-Line	Assemble collector to headers	$ 0.19	unit	4			$ 0.76
40	Assemble, 1 kg, Interference	Assemble headers to engine	$ 0.38	unit	1			$ 0.38
50	Assemble, 1 kg, Interference	Assemble secondary collector	$ 0.19	unit	2			$ 0.38
60	Ratchet <= 25.4 mm	Tignten headers nut	$ 0.75	unit	8			$ 6.00
70	Assemble, 3 kg, Line-on-Line	Muffler	$ 0.38	unit	1			$ 0.38
80	Assemble, 1 kg, Loose	Muffler mount	$ 0.06	unit	1			$ 0.06
90	Ratchet <= 6.35 mm	Tighten muffler mount nut	$ 0.50	unit	2			$ 1.00
100	Reaction Tool <= 6.35 mm	Reaction tool for M5 nut	$ 0.25	unit	2			$ 0.50
110	Assemble, 1 kg, Interference	Springs	$ 0.19	unit	5			$ 0.95
120	Assemble, 1 kg, Line-on-Line	Muffler collar,washers and spacer	$ 0.19	unit	1			$ 0.19
130	Ratchet <= 25.4 mm	Tighten muffler collar bolt	$ 0.75	unit	1			$ 0.75
							Sub Total	**$ 17.59**

ItemOrder	Fastener	Use	UnitCost	Size1	Unit1	Size2	Unit2	Quantity	Sub Total
10	Nut, Grade 8.8 (SAE 5)	Headers nuts	$ 0.04	8	mm			8	$ 0.32
20	Washer, Grade 8.8 (SAE 5)	Muffler collar washers	$ 0.01	8	mm			2	$ 0.02
30	Bolt, Grade 8.8 (SAE 5)	Muffler collar bolt	$ 0.10	8	mm	25.00	mm	1	$ 0.10
40	Nut, Grade 8.8 (SAE 5)	Muffler mount nut	$ 0.02	5	mm			2	$ 0.04
50	Bolt, Grade 8.8 (SAE 5)	Muffler mount bolt	$ 0.03	5	mm	20	mm	2	$ 0.06
								Sub Total	**$ 0.54**

ItemOrder	Tooling	Use	UnitCost	Unit	Quantity	PVF	FractionIncluded	Sub Total
10	Welds - Welding Fixture		$ 500.00	point	8	3000	1	$ 1.33
							Sub Total	**$ 1.33**

University	Ecole Centrale de Lyon			**Car #**	81	**Part Cost**	$ 4.86
System	Engine and drivetrain	**FileLink1**				**Qty**	4
Assembly	Exhaust system	**FileLink2**		**FileLink1**			
Part	Exhaust tip	**FileLink3**		**FileLink2**		**Extended Cost**	$ 19.43
P/N Base	02001			**FileLink3**			
Suffix	AA						
Details							

ItemOrder	Material	Use	UnitCost	Size1	Unit1	Size2	Unit2	Area Name	Area	Length	Density	Quantity	Sub Total
10	Steel, Mild	Flange material	$ 2.25	45	mm			Round 45mm	1.59E-03	2.70E-02	7 800.00	1	$ 0.75
												Sub Total	**$ 0.75**

ItemOrder	Process	Use	UnitCost	Unit	Quantity	Multiplier	Mult. Val.	Sub Total
10	Machining Setup, Install and remove		$ 1.30	unit	1	4 parts made from a single machining setup	0.25	$ 0.33
20	Machining		$ 0.04	cm^3	25.2	Material - Stainless Steel	3.75	$ 3.78
							Sub Total	**$ 4.11**

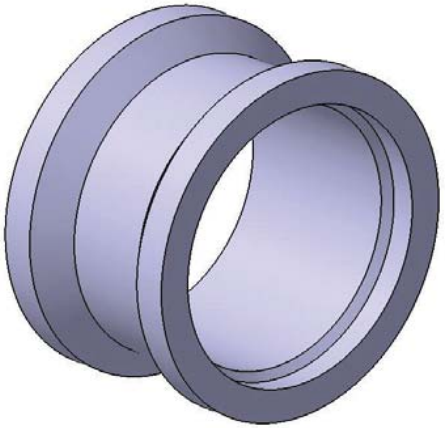

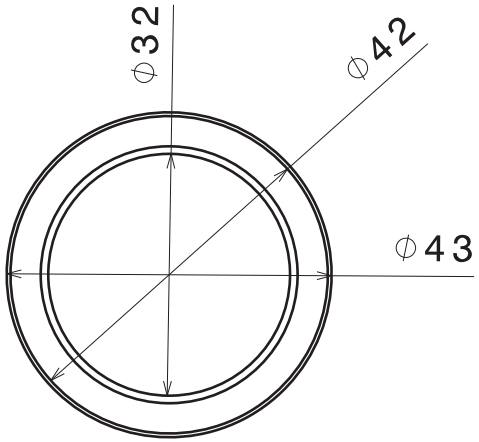

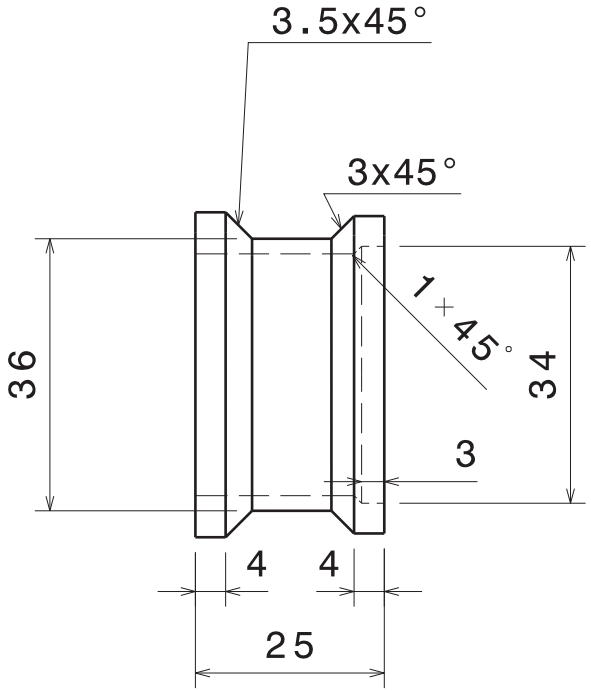

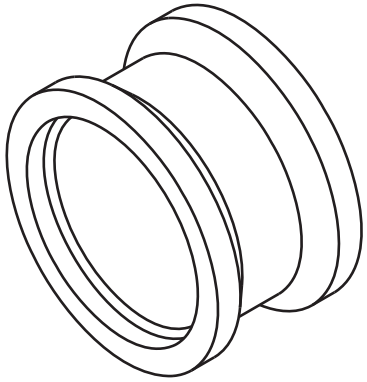

Tolérances générales ISO 2768 - mK

Taille A4		Ecurie Piston Sport Auto
Dessiné par Thomas Derouin	Date 13/11/2013	Désignation: Embout collecteur
Coordonnées 06 50 61 35 55 thomas.derouin@ecl2015.ec-lyon.fr		Quantité 4 / Matériau Acier S235 / Version 1.0
Vérifié par	Date	Echelle 1:1 / Numéro du plan 14B001 / Feuille 1/1

University	Ecole Centrale de Lyon			**Car #**	81	**Part Cost**	$ 1.74
System	Engine and drivetrain	**FileLink1**				**Qty**	4
Assembly	Exhaust system	**FileLink2**		**FileLink1**			
Part	Exhaust flange	**FileLink3**		**FileLink2**		**Extended Cost**	$ 6.94
P/N Base	02002			**FileLink3**			
Suffix	AA						
Details							

ItemOrder	Material	Use	UnitCost	Size1	Unit1	Size2	Unit2	Area Name	Area	Length	Density	Quantity	Sub Total
10	Steel, Mild	Flange material	$ 2.25	80	mm	50	mm	Rectangular area 80mm x 50mm	4.00E-03	5.00E-03	7 800.00	1	$ 0.35
												Sub Total	**$ 0.35**

ItemOrder	Process	Use	UnitCost	Unit	Quantity	Multiplier	Mult. Val.	Sub Total
10	Machining Setup, Install and remove		$ 1.30	unit	1	4 parts made from a single machining setup	0.25	$ 0.33
20	Laser Cut	Flange cut	$ 0.01	cm	35.3	Material - Steel	3	$ 1.06
							Sub Total	**$ 1.38**

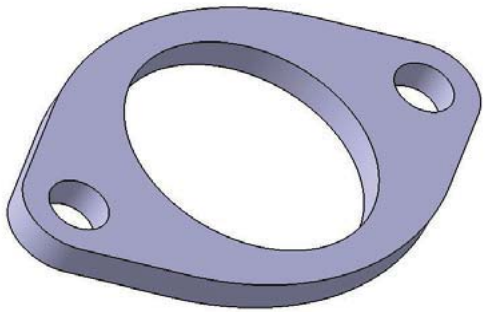

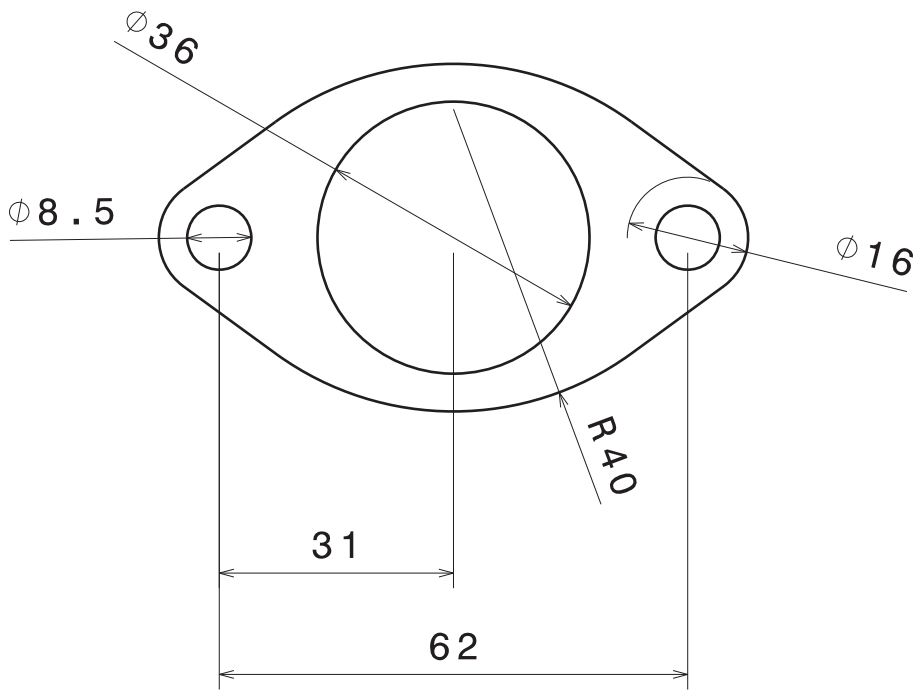

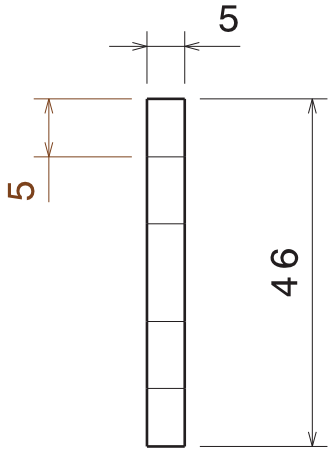

Acier au choix du fabricant

Tolérances générales ISO 2768 - mK

Taille A4		Ecurie Piston Sport Auto
Dessiné par Thomas Derouin	Date 13/11/2013	Désignation Bride collecteur
Coordonnées 06 50 61 35 55 thomas.derouin@ecl2015.ec-lyon.fr		Quantité 4 / Matériau Acier / Version 1.0
Vérifié par	Date	Echelle 1:1 / Numéro du plan 14M014 / Feuille 1/1

50

University	Ecole Centrale de Lyon			**Car #**	81	**Part Cost**	$ 76.75
System	Engine and drivetrain	**FileLink1**				**Qty**	1
Assembly	Exhaust system	**FileLink2**		**FileLink1**			
Part	Exhaust headers	**FileLink3**		**FileLink2**		**Extended Cost**	$ 76.75
P/N Base	02003			**FileLink3**			
Suffix	AA						
Details							

ItemOrder	Material	Use	UnitCost	Size1	Unit1	Size2	Unit2	Area Name	Area	Length	Density	Quantity	Sub Total
10	Steel, Stainless	Headers material	$ 2.25					Round 32mm x 1.5mm	1.44E-04	1.60	7 800.00	1	$ 4.04
												Sub Total	**$ 4.04**

ItemOrder	Process	Use	UnitCost	Unit	Quantity	Multiplie	Mult. Val.	Sub Total
10	Tube bends		$ 0.75	bend	8			$ 6.00
20	Tube cut		$ 0.15	cm	76.8			$ 11.52
30	Tube end preperation for welding		$ 0.75	end	24			$ 18.00
40	Weld - Round Tubing		$ 0.38	cm	76.8			$ 29.18
							Sub Total	**$ 64.70**

ItemOrder	Tooling	Use	UnitCost	Unit	Quantity	PVF	FracIncld	Sub Total
10	Welds - Welding Fixture		$ 500.00	point	48	3000	1	$ 8.00
							Sub Total	**$ 8.00**

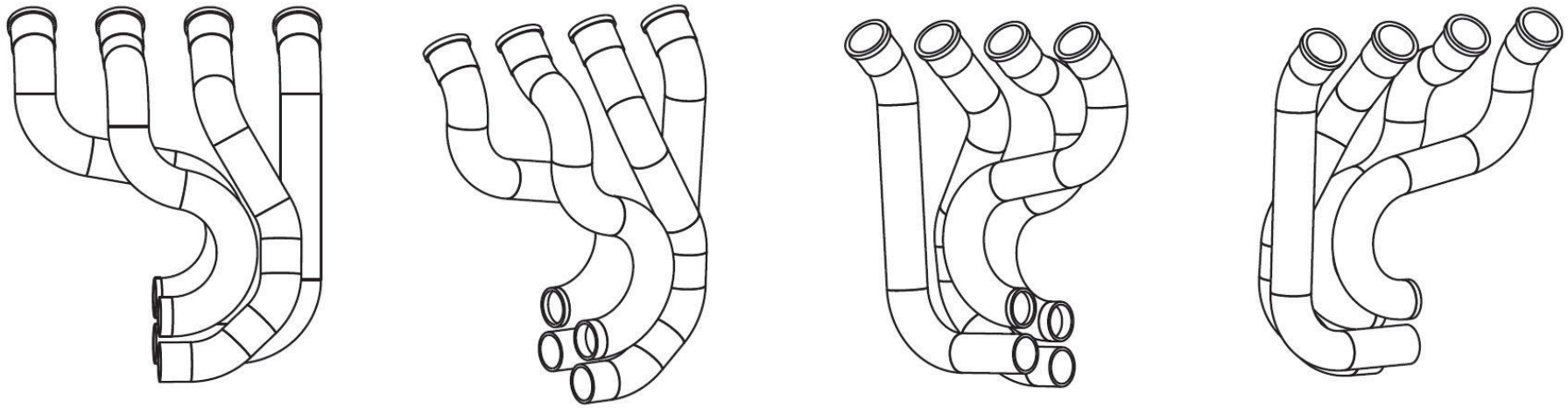

University	Ecole Centrale de Lyon			**Car #**	81	**Part Cost**	$ 77.01
System	Engine and drivetrain	**FileLink1**				**Qty**	1
Assembly	Exhaust system	**FileLink2**		**FileLink1**			
Part	Exhaust primary collector	**FileLink3**		**FileLink2**		**Extended Cost**	$ 77.01
P/N Base	02004			**FileLink3**			
Suffix	AA						
Details							

ItemOrder	Material	Use	UnitCost	Size1	Unit1	Size2	Unit2	Area Name	Area	Length	Density	Quantity	Sub Total
10	Steel, Stainless	Collector material	$ 2.25					Round 32mm x 1.5mm	1.44E-04	0.60	7 800.00	1	$ 1.52
20	Steel, Stainless	Collector material	$ 2.25					Round 40mm x 1.5mm	1.82E-04	0.08	7 800.00	1	$ 0.26
												Sub Total	**$ 1.77**

ItemOrder	Process	Use	UnitCost	Unit	Quantity	Multiplier	Mult. Val.	Sub Total
10	Tube bends		$ 0.75	bend	15			$ 11.25
20	Tube cut		$ 0.15	cm	96			$ 14.40
30	Tube end preperation for welding		$ 0.75	end	22			$ 16.50
40	Weld - Round Tubing		$ 0.38	cm	70.4			$ 26.75
							Sub Total	**$ 68.90**

ItemOrder	Tooling	Use	UnitCost	Unit	Quantity	PVF	FracIncld	Sub Total
10	Welds - Welding Fixture		$ 500.00	point	38	3000	1	$ 6.33
							Sub Total	**$ 6.33**

University	Ecole Centrale de Lyon			**Car #**	81	**Part Cost**	$ 43.82
System	Engine and drivetrain	**FileLink1**				**Qty**	1
Assembly	Exhaust system	**FileLink2**		**FileLink1**			
Part	Exhaust secondary collector	**FileLink3**		**FileLink2**		**Extended Cost**	$ 43.82
P/N Base	02005			**FileLink3**			
Suffix	AA						
Details							

ItemOrder	Material	Use	UnitCost	Size1	Unit1	Size2	Unit2	Area Name	Area	Length	Density	Quantity	Sub Total
10	Steel, Stainless	Collector material	$ 2.25					Round 40mm x 1.5mm	1.82E-04	0.30	7 800.00	1	$ 0.96
20	Steel, Stainless	Collector material	$ 2.25					Round 50mm x 1.5mm	2.28E-04	0.40	7 800.00	1	$ 1.60
												Sub Total	**$ 2.56**

ItemOrder	Process	Use	UnitCost	Unit	Quantity	Multiplier	Mult. Val.	Sub Total
10	Tube bends		$ 0.75	bend	2			$ 1.50
20	Tube cut		$ 0.15	cm	54			$ 8.10
30	Tube end preperation for welding		$ 0.75	end	13			$ 9.75
40	Weld - Round Tubing		$ 0.38	cm	41			$ 15.58
							Sub Total	**$ 34.93**

ItemOrder	Tooling	Use	UnitCost	Unit	Quantity	PVF	FracIncld	Sub Total
10	Welds - Welding Fixture		$ 500.00	point	38	3000	1	$ 6.33
							Sub Total	**$ 6.33**

University	Ecole Centrale de Lyon			**Car #**	81	**Part Cost**	$ 10.66
System	Engine and drivetrain	**FileLink1**				**Qty**	1
Assembly	Exhaust system	**FileLink2**		**FileLink1**			
Part	Muffler collar	**FileLink3**		**FileLink2**		**Extended Cost**	$ 10.66
P/N Base	EN 02007			**FileLink3**			
Suffix	AA						
Details							

ItemOrder	Material	Use	UnitCost	Size1	Unit1	Size2	Unit2	Area Name	Area	Length	Density	Quantity	Sub Total
10	Carbon Fiber, 1 Ply		$ 200.00	0.05	kg							1	$ 10.00
												Sub Total	**$ 10.00**

ItemOrder	Process	Use	UnitCost	Unit	Quantity	Multiplier	Mult. Val.	Sub Total
10	Lamination, Manual		$ 35.00	m^2	1.12E-02			$ 0.39
20	Cure, Oven		$ 20.00	m^2	1.12E-02			$ 0.22
							Sub Total	**$ 0.62**

ItemOrder	Tooling	Use	UnitCost	Unit	Quantity	PVF	FracIncld	Sub Total
10	Lamination - Composite Tool	Seat	$ 10,000	m^2	0.012	3000	1	$ 0.04
							Sub Total	**$ 0.04**

University	Ecole Centrale de Lyon			**Car #**	81	**Part Cost**	$ 3.86
System	Engine and drivetrain	**FileLink1**				**Qty**	1
Assembly	Exhaust system	**FileLink2**		**FileLink1**			
Part	Muffler mount	**FileLink3**		**FileLink2**		**Extended Cost**	$ 3.86
P/N Base	EN 02009			**FileLink3**			
Suffix	AA						
Details							

ItemOrder	Material	Use	UnitCost	Size1	Unit1	Size2	Unit2	Area Name	Area	Length	Density	Quantity	Sub Total
10	Aluminum, Normal		$ 4.20	40	mm	25	mm	Rectangular area 40mm x 25mm	1.00E-03	0.02	2,710.00	1	$ 0.17
												Sub Total	**$ 0.17**

ItemOrder	Process	Use	UnitCost	Unit	Quantity	Multiplier	Mult. Val.	Sub Total
10	Machining Setup, Install and remove		$ 1.30	unit	1			$ 1.30
20	Machining		$ 0.04	cm^3	7	Material - Aluminum	1	$ 0.28
30	Drilled holes < 25.4 mm dia.		$ 0.35	hole	1			$ 0.35
40	Machining Setup, Change		$ 0.65	unit	1			$ 0.65
50	Machining		$ 0.04	cm^3	4	Material - Aluminum	1	$ 0.16
60	Threading, Internal (machining)		$ 0.10	cm	1.5			$ 0.15
70	Saw or tubing cuts		$ 0.40	cm	2			$ 0.80
							Sub Total	**$ 3.69**

University	Ecole Centrale de Lyon			**Car #**	81	**Part Cost**	$ 1.46
System	Engine and drivetrain	**FileLink1**				**Qty**	1
Assembly	Exhaust system	**FileLink2**		**FileLink1**			
Part	Spacer	**FileLink3**		**FileLink2**		**Extended Cost**	$ 1.46
P/N Base	02008			**FileLink3**			
Suffix	AA						
Details							

ItemOrder	Material	Use	UnitCost	Size1	Unit1	Size2	Unit2	Area Name	Area	Length	Density	Quantity	Sub Total
10	Aluminum, Normal	Spacer material	$ 4.20	16	mm			Round 16mm	2.01E-04	0.025	2,710.00	1	$ 0.06
												Sub Total	**$ 0.06**

ItemOrder	Process	Use	UnitCost	Unit	Quantity	Multiplier	Mult. Val.	Sub Total
10	Machining Setup, Install and remove		$ 1.30	unit	1			$ 1.30
20	Machining		$ 0.04	cm^3	2.5	Material - Aluminum	1	$ 0.10
							Sub Total	**$ 1.40**

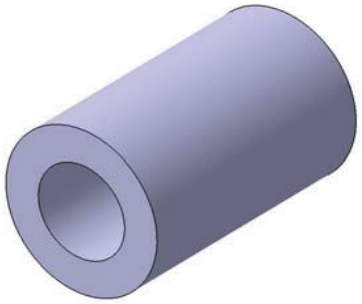

University	Ecole Centrale de Lyon			**Car #**	81	**Part Cost**	$ 3.86
System	Engine and drivetrain	**FileLink1**				**Qty**	1
Assembly	Exhaust system	**FileLink2**		**FileLink1**			
Part	Muffler mount	**FileLink3**		**FileLink2**		**Extended Cost**	$ 3.86
P/N Base	02009			**FileLink3**			
Suffix	AA						
Details							

ItemOrder	Material	Use	UnitCost	Size1	Unit1	Size2	Unit2	Area Name	Area	Length	Density	Quantity	Sub Total
10	Aluminum, Normal		$ 4.20	40	mm	25	mm	Rectangular area 40mm x 25mm	1.00E-03	0.02	2,710.00	1	$ 0.17
												Sub Total	**$ 0.17**

ItemOrder	Process	Use	UnitCost	Unit	Quantity	Multiplier	Mult. Val.	Sub Total
10	Machining Setup, Install and remove		$ 1.30	unit	1			$ 1.30
20	Machining		$ 0.04	cm^3	7	Material - Aluminum	1	$ 0.28
30	Drilled holes < 25.4 mm dia.		$ 0.35	hole	1			$ 0.35
40	Machining Setup, Change		$ 0.65	unit	1			$ 0.65
50	Machining		$ 0.04	cm^3	4	Material - Aluminum	1	$ 0.16
60	Threading, Internal (machining)		$ 0.10	cm	1.5			$ 0.15
70	Saw or tubing cuts		$ 0.40	cm	2			$ 0.80
							Sub Total	**$ 3.69**

University	Ecole Centrale de Lyon	**Car #**	81	**Asm Cost**	$ 164.29
System	Engine and drivetrain			**Qty**	1
Assembly	Fuel tank assembly	**FileLink1**			
P/N Base	A0003	**FileLink2**		**Extended Cost**	$ 164.29
Suffix	AA	**FileLink3**			
Details	Fuel tank with filler neck				

ItemOrder	Part	Part Cost	Quantity	Sub Total
10	Fuel tank	$ 70.17	1	$ 70.17
20	Filler neck	$ 15.37	1	$ 15.37
30	Filler neck cap	$ 11.85	1	$ 11.85
40	Rear tab	$ 1.65	2	$ 3.30
50	Front tab	$ 3.60	1	$ 3.60
60	Filler neck mount	$ 3.96	1	$ 3.96
70	Filler neck collar	$ 2.26	1	$ 2.26
			Sub Total	**$ 110.51**

ItemOrder	Material	Use	UnitCost	Size1	Unit1	Size2	Unit2	Area Name	Area	Length	Density	Quantity	Sub Total
10	Hose, Silicone	Filler hose	$ 3.50	44	mm	150	mm					1	$ 3.50
												Sub Total	**$ 3.50**

ItemOrder	Process	Use	UnitCost	Unit	Quantity	Multiplier	Mult. Val.	Sub Total
10	Weld	Tab on frame	$ 0.15	cm	10			$ 1.50
20	Assemble, 1 kg, Loose	Silentblocs on fuel tank	$ 0.06	unit	4			$ 0.24
30	Ratchet <= 25.4 mm	Tignten silentblocs on fuel tank	$ 0.75	unit	4			$ 3.00
40	Assemble, 1 kg, Loose	Tank on chassis	$ 0.06	unit	4			$ 0.24
50	Ratchet <= 25.4 mm	Tighten tank on chassis	$ 0.75	unit	4			$ 3.00
60	Assemble, 1 kg, Loose	Filler neck collar	$ 0.06	unit	1			$ 0.06
70	Assemble, 1 kg, Loose	Clamp on filler tube	$ 0.06	unit	2			$ 0.12
80	Assemble, 1 kg, Interference	Filler tube on filler neck	$ 0.19	unit	1			$ 0.19
90	Screwdriver > 1 Turn	Hose clamp	$ 0.50	unit	1			$ 0.50
100	Assemble, 1 kg, Interference	Filler tube on fuel tank	$ 0.19	unit	1			$ 0.19
110	Screwdriver > 1 Turn	Hose clamp	$ 0.50	unit	1			$ 0.50
120	Assemble, 1 kg, Loose	Filler neck mount	$ 0.06	unit	1			$ 0.06
130	Ratchet <= 6.35 mm	Tighten M5 nut	$ 0.50	unit	2			$ 1.00
140	Reaction Tool <= 6.35 mm	Reaction tool for M5 nut	$ 0.25	unit	2			$ 0.50
150	Ratchet <= 25.4 mm	Tighten M8 bolt	$ 0.75	unit	1			$ 0.75
160	Hand, Loose > 25.4 mm	Filler neck cap	$ 0.75	unit	1			$ 0.75
							Sub Total	**$ 12.60**

ItemOrder	Fastener	Use	UnitCost	Size1	Unit1	Size2	Unit2	Quantity	Sub Total
10	Hose clamp, worm drive	sight tube	$ 0.55	12	mm			2	$ 1.10
20	Hose clamp, worm drive	Filler tube	$ 0.69	48	mm			2	$ 1.38
30	Mount, Vibration-Damping Sandwich		$ 8.10	30	mm			4	$ 32.40

40	Washer, Grade 8.8 (SAE 5)	Tank mount	$ 0.01	8	mm			8	$ 0.08
50	Nut, Grade 8.8 (SAE 5)	Tank mount	$ 0.04	8	mm			8	$ 0.32
60	Bolt, Grade 8.8 (SAE 5)	Filler neck mount	$ 0.07	8	mm	15	mm	1	$ 0.07
								Sub Total	**$ 35.35**

ItemOrder	Tooling	Use	UnitCost	Unit	Quantity	PVF	FractionInclu	Sub Total
10	Welds - Welding Fixture		$ 500.00		14	3000	1	$ 2.33
							Sub Total	**$ 2.33**

University	Ecole Centrale de Lyon			**Car #**	81	**Part Cost**	$ 70.17
System	Engine and drivetrain	**FileLink1**				**Qty**	1
Assembly	Fuel tank assembly	**FileLink2**		**FileLink1**			
Part	Fuel tank	**FileLink3**		**FileLink2**		**Extended Cost**	$ 70.17
P/N Base	03001			**FileLink3**			
Suffix	AA						
Details							

ItemOrder	Material	Use	UnitCost	Size1	Unit1	Size2	Unit2	Area Name	Area	Length	Density	Quantity	Sub Total
10	Steel, Stainless	Fuel tank material	$ 2.25	1120	mm	245	mm	Rectangular area 1120mm x 245mm	2.74E-01	1.50E-03	7 800.00	1	$ 7.22
20	Tubing, Steel	Neck tube	$ 2.25	38	mm			Round 40mm x 2mm	2.39E-04	0.10	7 800.00	1	$ 0.42
30	Adapter/L.P./Male Flare to Pipe//Steel/		$ 1.59	14.2	mm							3	$ 4.77
40	Fitting/L.P./Cap//Aluminum/Anodized		$ 7.20	14.2	mm							1	$ 7.20
												Sub Total	**$ 19.61**

ItemOrder	Process	Use	UnitCost	Unit	Quantity	Multiplier	Mult. Val.	Sub Total
10	Machining Setup, Install and remove		$ 1.30	unit	1			$ 1.30
20	Laser cut	Side plates	$ 0.01	cm	50	Material - Stainless Steel	3.75	$ 1.88
30	Machining Setup, Install and remove		$ 1.30	unit	1			$ 1.30
40	Laser cut	Main plate	$ 0.01	cm	131	Material - Stainless Steel	3.75	$ 4.91
50	Sheet metal bends		$ 0.25	bend	4			$ 1.00
60	Laser cut	Internal wall	$ 0.01	cm	60	Material - Stainless Steel	3.75	$ 2.25
70	Weld	Tank welding	$ 0.15	cm	180			$ 27.00
80	Weld	Fittings welding	$ 0.15	cm	3			$ 0.45
90	Tube cut	Neck tube cut	$ 0.15	cm	4			$ 0.60
100	Tube end preperation for welding	Neck tube	$ 0.75	end	1			$ 0.75
110	Weld - Round Tubing	Neck tube welding	$ 0.38	cm	1			$ 0.38
120	Laser cut	Tab	$ 0.01	cm	52			$ 0.52
130	Weld	Tab welding	$ 0.15	cm	18			$ 2.70
140	Assemble, 1 kg, Line-on-Line	Cap assembly	$ 0.13	unit	1			$ 0.13
							Sub Total	**$ 45.17**

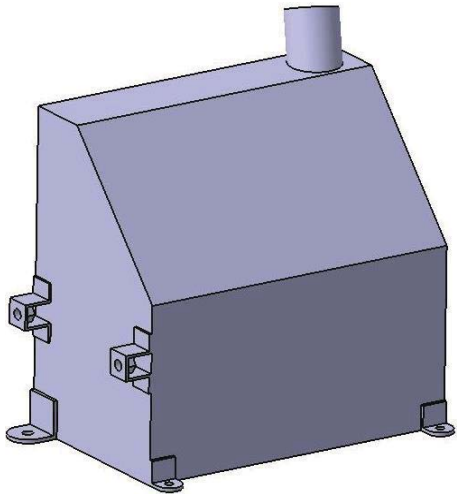

ItemOrder	Fastener	Use	UnitCost	Size1	Unit1	Size2	Unit2	Quantity	Sub Total
10	Nut, Grade 8.8 (SAE 5)	Catch cans mounts	0.03	6	mm			2	$ 0.06
								Sub Total	**$ 0.06**

ItemOrder	Tooling	Use	UnitCost	Unit	Quantity	PVF	FracIncld	Sub Total
10	Welds - Welding Fixture		$ 500.00	point	32	3000	1	$ 5.33
							Sub Total	**$ 5.33**

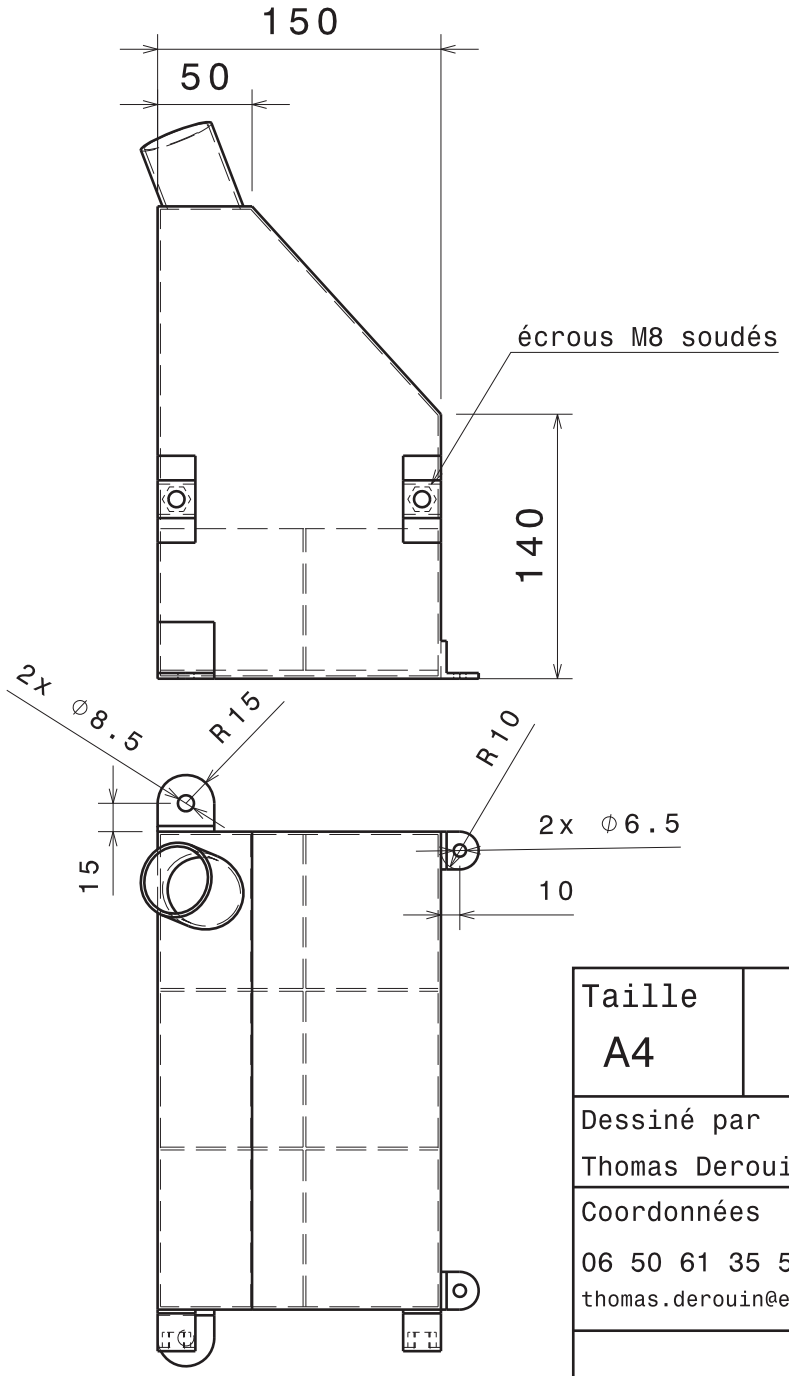

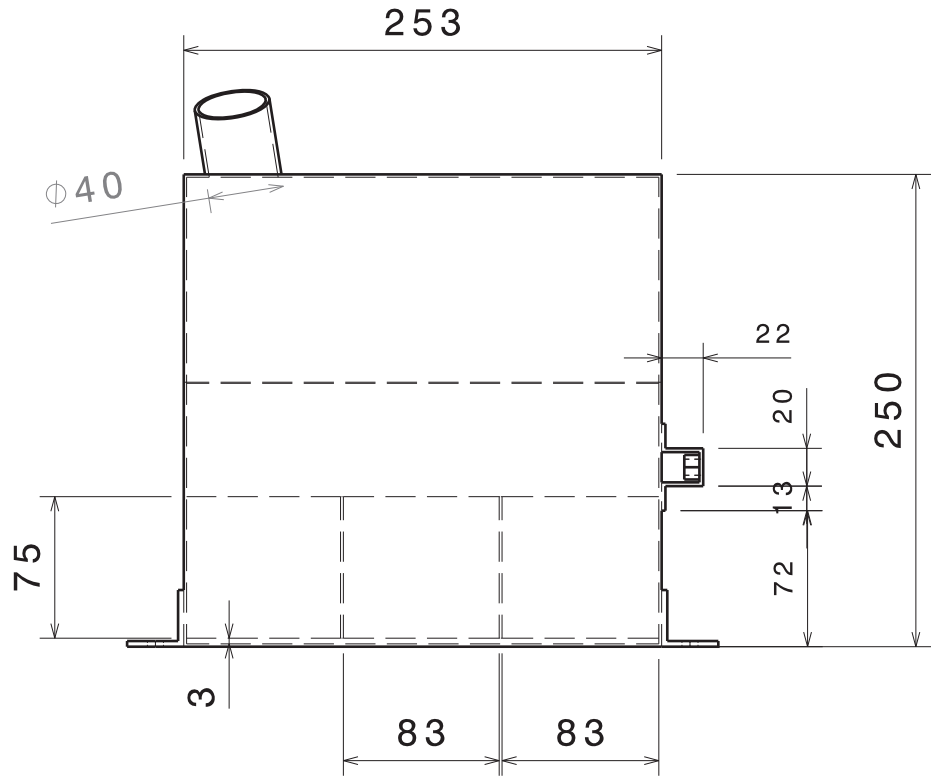

Tolérances générales ISO 2768 - mK

Taille A4		Ecurie Piston Sport Auto
Dessiné par Thomas Derouin	Date 15/12/2013	Désignation Réservoir
Coordonnées 06 50 61 35 55 thomas.derouin@ecl2015.ec-lyon.fr		
Quantité 1	Matériau Acier inox	Version 1.0
Echelle 1:4	Numéro du plan XXX	Feuille 1/1

University	Ecole Centrale de Lyon			**Car #**	81	**Part Cost** $ 15.37
System	Engine and drivetrain	**FileLink1**				**Qty** 1
Assembly	Fuel tank assembly	**FileLink2**		**FileLink1**		
Part	Filler neck	**FileLink3**		**FileLink2**		**Extended Cost** $ 15.37
P/N Base	03002			**FileLink3**		
Suffix	AA					
Details						

ItemOrder	Material	Use	UnitCost	Size1	Unit1	Size2	Unit2	Area Name	Area	Length	Density	Quantity	Sub Total
10	Aluminum, Normal	Filler neck material	$ 4.20					Round 40mm x 2mm	2.39E-04	0.25	2 710.00	1	$ 0.68
20	Adapter/L.P./Barb to Male Pipe/90 Deg./Aluminum/Anodized		$ 3.72	6	mm	6	mm					2	$ 7.44
30	Hose, Silicone	Sight tube	$ 0.29	6	mm	100	mm					1	$ 0.29
												Sub Total	**$ 8.41**

ItemOrder	Process	Use	UnitCost	Unit	Quantity	Multiplier	Mult. Val.	Sub Total
10	Saw or tubing cuts		$ 0.40	cm	4			$ 1.60
20	Machining Setup, Install and remove		$ 1.30	unit	1	Material - Aluminum	1	$ 1.30
30	Machining		$ 0.04	cm^3	10	Material - Aluminum	1	$ 0.40
40	Threading, External (machining)	Thread for cap	$ 0.10	cm	1	Material - Aluminum	1	$ 0.10
50	Weld	Barb fittings welding on tube	$ 0.15	cm	4			$ 0.60
60	Assemble, 1 kg, Interference	Sight tube assembly	$ 0.19	unit	1			$ 0.19
70	Screwdriver > 1 Turn	Hose clamp	$ 0.50	unit	2			$ 1.00
							Sub Total	**$ 5.19**

ItemOrder	Fastener	Use	UnitCost	Size1	Unit1	Size2	Unit2	Quantity	Sub Total
10	Hose Clamp, Worm Drive		0.55	12	mm			2	$ 1.10
								Sub Total	**$ 1.10**

ItemOrder	Tooling	Use	UnitCost	Unit	Quantity	PVF	FracIncld	Sub Total
10	Welds - Welding Fixture		$ 500.00	point	4	3000	1	$ 0.67
							Sub Total	**$ 0.67**

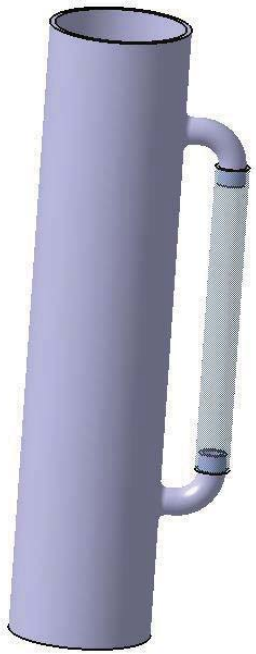

University	Ecole Centrale de Lyon			**Car #**	81	**Part Cost**	$ 11.85
System	Engine and drivetrain	**FileLink1**				**Qty**	1
Assembly	Fuel tank assembly	**FileLink2**		**FileLink1**			
Part	Filler neck cap	**FileLink3**		**FileLink2**		**Extended Cost**	$ 11.85
P/N Base	03003			**FileLink3**			
Suffix	AA						
Details							

ItemOrder	Material	Use	UnitCost	Size1	Unit1	Size2	Unit2	Area Name	Area	Length	Density	Quantity	Sub Total
10	Aluminum, Normal	Cap material	$ 4.20	50	mm			Round 50mm	1.96E-03	1.50E-02	2 710.00	1	$ 0.34
20	Fuel Check Valve		$ 8.00									1	$ 8.00
												Sub Total	**$ 8.34**

ItemOrder	Process	Use	UnitCost	Unit	Quantity	Multiplier	Mult. Val.	Sub Total
10	Machining Setup, Install and remove		$ 1.30	unit	1	Material - Aluminum	1	$ 1.30
20	Machining		$ 0.04	cm^3	12	Material - Aluminum	1	$ 0.48
30	Threading, Internal (machining)		$ 0.10	cm	1	Material - Aluminum	1	$ 0.10
40	Assemble, 1 kg, Line-on-Line	Check valve assembly	$ 0.13	unit	1			$ 0.13
50	Wrench <= 25.4 mm	Check valve	$ 1.50	unit	1			$ 1.50
							Sub Total	**$ 3.51**

University	Ecole Centrale de Lyon			**Car #**	81	**Part Cost**	$ 1.65
System	Engine and drivetrain	**FileLink1**				**Qty**	2
Assembly	Fuel tank assembly	**FileLink2**		**FileLink1**			
Part	Rear tab	**FileLink3**		**FileLink2**		**Extended Cost**	$ 3.30
P/N Base	03004			**FileLink3**			
Suffix	AA						
Details							

ItemOrder	Material	Use	UnitCost	Size1	Unit1	Size2	Unit2	Area Name	Area	Length	Density	Quantity	Sub Total
10	Steel, Mild		$ 2.25	32	mm	30	mm	Rectangular area 32mm x 30 mm	9.60E-04	4.00E-03	7 800.00	1	$ 0.07
												Sub Total	**$ 0.07**

ItemOrder	Process	Use	UnitCost	Unit	Quantity	Multiplier	Mult. Val.	Sub Total
10	Machining Setup, Install and remove		$ 1.30	unit	1			$ 1.30
20	Laser cut		$ 0.01	cm	9.5	Material - Steel	3	$ 0.29
							Sub Total	**$ 1.59**

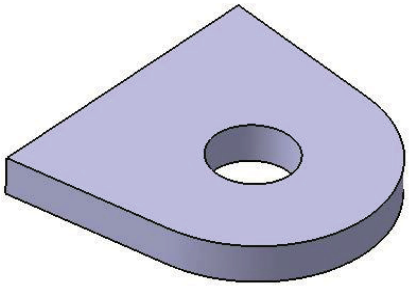

University	Ecole Centrale de Lyon			**Car #**	81	**Part Cost**	$ 3.60
System	Engine and drivetrain	**FileLink1**				**Qty**	1
Assembly	Fuel tank assembly	**FileLink2**		**FileLink1**			
Part	Front tab	**FileLink3**		**FileLink2**		**Extended Cost**	$ 3.60
P/N Base	03005			**FileLink3**			
Suffix	AA						
Details							

ItemOrder	Material	Use	UnitCost	Size1	Unit1	Size2	Unit2	Area Name	Area	Length	Density	Quantity	Sub Total
10	Steel, Mild		$ 2.25	522	mm	32	mm	Rectangular area 522mm x 32mm	1.67E-02	2.00E-03	7 800.00	1	$ 0.59
												Sub Total	**$ 0.59**

ItemOrder	Process	Use	UnitCost	Unit	Quantity	Multiplier	Mult. Val.	Sub Total
10	Machining Setup, Install and remove		$ 1.30	unit	1			$ 1.30
20	Laser cut		$ 0.01	cm	57	Material - Steel	3	$ 1.71
							Sub Total	**$ 3.01**

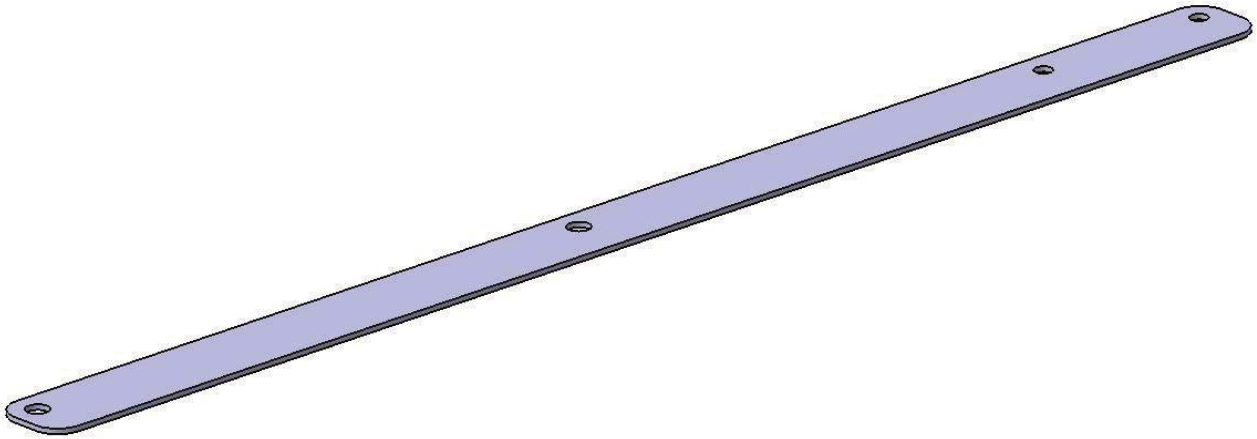

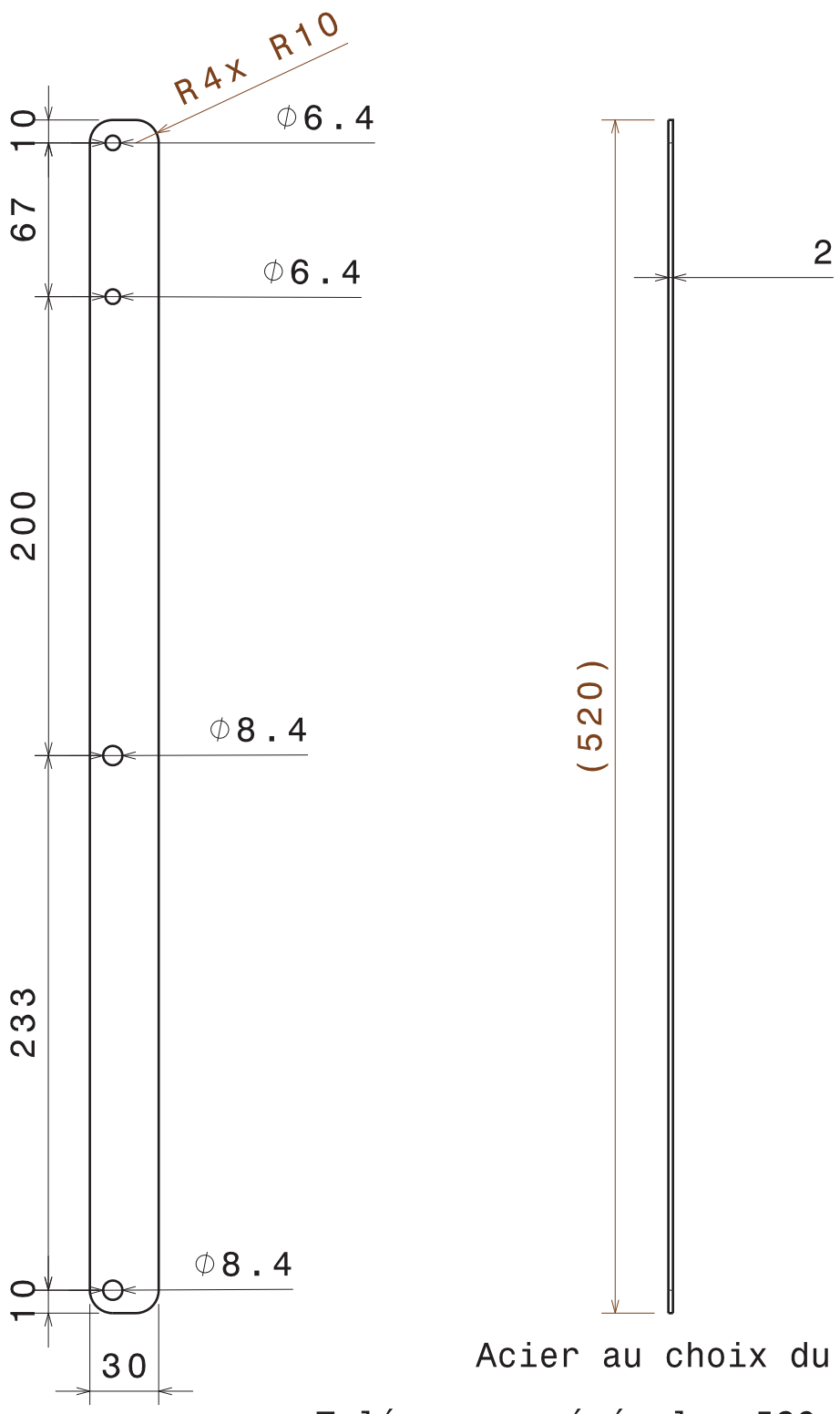

Acier au choix du fabricant

Tolérances générales ISO 2768 - mK

Taille A4		Ecurie Piston Sport Auto	
Dessiné par Thomas Derouin	Date 11/11/2013	Désignation Chape reservoir avant	
Coordonnées 06 50 61 35 55 thomas.derouin@ecl2015.ec-lyon.fr		Quantité 1	Matériau Acier	Version 1.0
Vérifié par	Date	Echelle 1:3	Numéro du plan 14M005	Feuille 1/1

University	Ecole Centrale de Lyon			**Car #**	81	**Part Cost**	$ 3.96
System	Engine and drivetrain	**FileLink1**				**Qty**	1
Assembly	Fuel tank assembly	**FileLink2**		**FileLink1**			
Part	Filler neck mount	**FileLink3**		**FileLink2**		**Extended Cost**	$ 3.96
P/N Base	03005			**FileLink3**			
Suffix	AA						
Details							

ItemOrder	Material	Use	UnitCost	Size1	Unit1	Size2	Unit2	Area Name	Area	Length	Density	Quantity	Sub Total
10	Aluminum, Normal	Mount material	$ 4.20	40	mm	25	mm	Rectangular area 40mm x 25mm	1.00E-03	1.50E-02	2 710.00	1	$ 0.17
												Sub Total	**$ 0.17**

ItemOrder	Process	Use	UnitCost	Unit	Quantity	Multiplier	Mult. Val.	Sub Total
10	Machining Setup, Install and remove		$ 1.30	unit	1			$ 1.30
20	Machining		$ 0.04	cm^3	7	Material - Aluminum	1	$ 0.28
30	Drilled holes < 25.4 mm dia.		$ 0.35	hole	1			$ 0.35
40	Machining Setup, Change		$ 0.65	unit	1			$ 0.65
50	Machining		$ 0.04	cm^3	4	Material - Aluminum	1	$ 0.16
60	Threading, Internal (machining)		$ 0.10	cm	1.5			$ 0.15
70	Saw or tubing cuts		$ 0.40	cm	2			$ 0.80
							Sub Total	**$ 3.69**

ItemOrder	Fastener	Use	UnitCost	Size1	Unit1	Size2	Unit2	Quantity	Sub Total
10	Nut, Grade 8.8 (SAE 5)		0.02	5	mm			2	$ 0.04
20	Bolt, Grade 8.8 (SAE 5)		0.03	5	mm	20	mm	2	$ 0.06
								Sub Total	**$ 0.10**

University	Ecole Centrale de Lyon			**Car #**	81	**Part Cost**	$ 2.26
System	Engine and drivetrain	**FileLink1**				**Qty**	1
Assembly	Fuel tank assembly	**FileLink2**		**FileLink1**			
Part	Filler neck collar	**FileLink3**		**FileLink2**		**Extended Cost**	$ 2.26
P/N Base	03006			**FileLink3**			
Suffix	AA						
Details							

ItemOrder	Material	Use	UnitCost	Size1	Unit1	Size2	Unit2	Area Name	Area	Length	Density	Quantity	Sub Total
10	Aluminum, Normal	Collar material	$ 4.20	22	mm	1.5	mm	Rectangular area 22mm x 1.5mm	3.30E-05	0.13	2 710.00	1	$ 0.05
												Sub Total	**$ 0.05**

ItemOrder	Process	Use	UnitCost	Unit	Quantity	Multiplier	Mult. Val.	Sub Total
10	Machining Setup, Install and remove		$ 1.30	unit	1			$ 1.30
20	Laser Cut		$ 0.01	cm	16	Material - Aluminum	1	$ 0.16
30	Sheet metal bends		$ 0.25	bend	3			$ 0.75
							Sub Total	**$ 2.21**

University	Ecole Centrale de Lyon	**Car #**	81	**Asm Cost**	$ 541.92
System	Engine and drivetrain			**Qty**	1
Assembly	Fuel system	**FileLink1**			
P/N Base	A0004	**FileLink2**		**Extended Cost**	$ 541.92
Suffix	AA	**FileLink3**			
Details	Complete fuel system assembly				

ItemOrder	Part	Part Cost	Quantity	Sub Total
10	Primary Fuel Rail	$ 12.46	1	$ 12.46
20	Secondary Fuel Rail	$ 16.12	1	$ 16.12
30	Secondary fuel rail mount	$ 19.30	1	$ 19.30
40	Fuel pump tab	$ 3.44	2	$ 6.88
50	Fuel pressure regulator tab	$ 1.89	1	$ 1.89
60	Fuel pump left mount	$ 1.85	1	$ 1.85
70	Fuel pump right mount	$ 2.94	1	$ 2.94
			Sub Total	**$ 61.45**

ItemOrder	Material	Use	UnitCost	Size1	Unit1	Size2	Unit2	Area Name	Area	Length	Density	Quantity	Sub Total
10	Fuel Filter		$ 8.00									1.00	$ 8.00
20	Fuel Injector, Gasoline		$ 10.00									8.00	$ 80.00
30	Fuel pump, Fuel injected, Gasoline		$ 35.00									1.00	$ 35.00
40	Fuel pressure regulator, Gasoline		$ 15.00									1.00	$ 15.00
50	Hose, Low Pressure, Stainless Steel Braided Outer		$ 35.20	14.2	mm							1.30	$ 45.76
60	Adapter/L.P./Union/90 deg./Aluminum/Anodized		$ 11.83	14.2	mm	14.2	mm					1.00	$ 11.83
70	Fitting/L.P./Cap//Aluminum/Anodized		$ 7.20	14.2	mm							1.00	$ 7.20
80	Fitting/L.P./Elbow/90 deg./Aluminum/Anodized		$ 26.58	14.2	mm							3.00	$ 79.74
90	Fitting/L.P./Straight/Aluminum/Anodized		$ 12.67	14.2	mm							8.00	$ 101.36
100	Adapter/L.P./Union Reducer//Aluminum/Anodized		$ 2.32	6.35	mm	14.2	mm					4.00	$ 9.28
110	Adapter/L.P./Female Pipe Tee//Aluminum/Anodized		$ 27.21	14.2	mm	14.2	mm					1.00	$ 27.21
120	Banjo Fitting, Double, Aluminum		$ 23.55	14.2	mm							1.00	$ 23.55
130	Fitting/L.P./Tube Nut//Aluminum/Anodized		$ 3.88	14.2	mm							1.00	$ 3.88
140	Seal, O-Ring, Elastomer	Injectors seals	$ 0.05									16.00	$ 0.80
												Sub Total	**$ 448.61**

ItemOrder	Process	Use	UnitCost	Unit	Quantity	Multiplier	Mult. Val.	Sub Total
10	Weld	Tab on frame	0.15	cm	6			$ 0.90
20	Assemble, 1 kg, Interference	Assemble fittings on hose	$ 0.19	unit	10			$ 1.90
30	Assemble, 1 kg, Loose	Assemble pump and pump mount	$ 0.06	unit	1			$ 0.06
40	Ratchet <= 6.35 mm	Tighten M6 nut	$ 0.50	unit	2			$ 1.00
50	Reaction Tool <= 6.35 mm	Reaction tool for M6 nut	$ 0.25	unit	2			$ 0.50
60	Assemble, 1 kg, Loose	Assemble regulator on tab	$ 0.06	unit	1			$ 0.06
70	Ratchet <= 6.35 mm	Tighten M6 nut	$ 0.50	unit	2			$ 1.00
80	Reaction Tool <= 6.35 mm	Reaction tool for M6 nut	$ 0.25	unit	2			$ 0.50
90	Assemble, 1 kg, Loose	Assemble O-ring on injectors	$ 0.06	unit	16			$ 0.96
100	Assemble, 1 kg, Loose	Assemble injectors on fuel rail	$ 0.06	unit	8			$ 0.48
110	Assemble, 1 kg, Loose	Assemble secondary rail on adapter	$ 0.06	unit	1			$ 0.06
120	Ratchet <= 6.35 mm	Tighten M6 nut	$ 0.50	unit	3			$ 1.50
130	Brush Apply	Adhesive application	$ 0.02	cm^2	20			$ 0.40
140	Assemble, 1 kg, Loose	Assemble secondary rail on plenum	$ 0.06	unit	1			$ 0.06
150	Ratchet <= 6.35 mm	Tighten M6 nut	$ 0.50	unit	5			$ 2.50
160	Assemble, 1 kg, Loose	Assemble primary rail on plenum	$ 0.06	unit	1			$ 0.06
170	Ratchet <= 6.35 mm	Tighten M6 nut	$ 0.50	unit	3			$ 1.50
180	Assemble, 1 kg, Loose	Assemble banjo fittings on rail	$ 0.06	unit	1			$ 0.06
190	Ratchet <= 25.4 mm	Tighten tube nut	$ 0.75	unit	1			$ 0.75
200	Wrench <= 25.4 mm	Tighten fittings	$ 1.50	unit	10			$ 15.00
							Sub Total	**$ 29.25**

ItemOrder	Fastener	Use	UnitCost	Size1	Unit1	Size2	Unit2	Quantity	Sub Total
10	Bolt, Grade 8.8 (SAE 5)	Pump bolts	$ 0.04	6	mm	20	mm	2	$ 0.08
20	Washer, Grade 8.8 (SAE 5)	Pump washers	$ 0.01	6	mm			4	$ 0.04
30	Nut, Grade 8.8 (SAE 5)	Pump nuts	$ 0.03	6	mm			2	$ 0.06
40	Bolt, Grade 8.8 (SAE 5)	Regulator bolts	$ 0.05	6	mm	25	mm	2	$ 0.10
50	Washer, Grade 8.8 (SAE 5)	Regulator washers	$ 0.01	6	mm			4	$ 0.04
60	Nut, Grade 8.8 (SAE 5)	Regulator nuts	$ 0.03	6	mm			2	$ 0.06
70	Bolt, Grade 8.8 (SAE 5)	Primary fuel rail bolts	$ 0.04	6	mm	15	mm	3	$ 0.12
80	Washer, Grade 8.8 (SAE 5)	Primary fuel rail washers	$ 0.01	6	mm			6	$ 0.06
90	Nut, Grade 8.8 (SAE 5)	Primary fuel rail nuts	$ 0.03	6	mm			3	$ 0.09
100	Bolt, Grade 8.8 (SAE 5)	Secondary fuel rail mount bolts	$ 0.05	6	mm	25	mm	5	$ 0.25
110	Washer, Grade 8.8 (SAE 5)	Secondary fuel rail mount washers	$ 0.01	6	mm			10	$ 0.10
120	Nut, Grade 8.8 (SAE 5)	Secondary fuel rail mount nuts	$ 0.03	6	mm			5	$ 0.15
130	Bolt, Grade 8.8 (SAE 5)	Secondary fuel rail bolts	$ 0.04	6	mm	15	mm	3	$ 0.12
								Sub Total	**$ 1.27**

ItemOrder	Tooling	Use	UnitCost	Unit	Quantity	PVF	FractionIncluded	Sub Total
10	Welds - Welding Fixture		$ 500.00		8	3000	1	$ 1.33
							Sub Total	**1.33**

University	Ecole Centrale de Lyon			**Car #**	81	**Part Cost**	$ 12.46
System	Engine and drivetrain	**FileLink1**				**Qty**	1
Assembly	Fuel system	**FileLink2**		**FileLink1**			
Part	Primary fuel rail	**FileLink3**		**FileLink2**		**Extended Cost**	$ 12.46
P/N Base	04001			**FileLink3**			
Suffix	AA						
Details							

ItemOrder	Material	Use	UnitCost	Size1	Unit1	Size2	Unit2	Area Name	Area	Length	Density	Quantity	Sub Total
10	Steel, Mild	Material for part	$ 2.25	16	mm	3	mm	Round tube 16mm x 3mm	1.22E-04	0.30	7 800.00	1	$ 0.64
20	Steel, Mild	Material for part	$ 2.25	100	mm	30	mm	Rectangular area 100mm x 30mm	3.00E-03	2.00E-03	7 800.00	1	$ 0.11
												Sub Total	**$ 0.75**

ItemOrder	Process	Use	UnitCost	Unit	Quantity	Multiplier	Mult. Val.	Sub Total
10	Tube cut		$ 0.15	cm	5			$ 0.75
20	Machining Setup, Install and remove	Setup and remove for machining	$ 1.30	unit	1			$ 1.30
30	Threading, External (machining)		$ 0.10	xm	1.5	Material - Steel	3	$ 0.45
40	Tube end preperation for welding		$ 0.75	end	4			$ 3.00
50	Weld - Round Tubing		$ 0.38	cm	0.64			$ 0.24
60	Machining Setup, Install and remove	Setup and remove for laser cut	$ 1.30	unit	1			$ 1.30
70	Laser cut		$ 0.01	cm	18	Material - Steel	3	$ 0.54
80	Weld	Weld pieces together	$ 0.15	cm	12			$ 1.80
							Sub Total	**$ 9.38**

ItemOrder	Tooling	Use	UnitCost	Unit	Quantity	PVF	FracIncld	Sub Total
10	Welds - Welding Fixture		$ 500.00	point	14	3000	1	$ 2.33
							Sub Total	**$ 2.33**

University	Ecole Centrale de Lyon			**Car #**	81	**Part Cost**	$ 16.12
System	Engine and drivetrain	**FileLink1**				**Qty**	1
Assembly	Fuel system	**FileLink2**		**FileLink1**			
Part	Secondary Fuel Rail	**FileLink3**		**FileLink2**		**Extended Cost**	$ 16.12
P/N Base	04002			**FileLink3**			
Suffix	AA						
Details							

ItemOrder	Material	Use	UnitCost	Size1	Unit1	Size2	Unit2	Area Name	Area	Length	Density	Quantity	Sub Total
10	Steel, Mild		$ 2.25	16	mm	3	mm	Round tube 16mm x 3mm	1.22E-04	0.40	7 800.00	1	$ 0.86
20	Steel, Mild		$ 2.25	200	mm	30	mm	Rectangular area 100mm x 30mm	6.00E-03	2.00E-03	7 800.00	1	$ 0.21
30	Steel, Mild		$ 2.25	16	mm	3	mm	Round tube 16mm x 3mm	1.22E-04	0.04	7 800.00	1	$ 0.09
40	Steel, Mild		$ 2.25	30	mm	20	mm	Rectangular area 30mm x 20mm	6.00E-04	2.00E-03	7 800.00	1	$ 0.02
												Sub Total	**$ 1.17**

ItemOrder	Process	Use	UnitCost	Unit	Quantity	Multiplier	Mult. Val.	Sub Total
10	Tube cut		$ 0.15	cm	5			$ 0.75
20	Tube end preperation for welding		$ 0.75	end	4			$ 3.00
30	Weld - Round Tubing		$ 0.38	cm	0.64			$ 0.24
40	Machining Setup, Install and remove	Setup and remove for laser cut	$ 1.30	unit	1			$ 1.30
50	Laser cut	Tab and flange cut	$ 0.01	cm	34	Material - Steel	3	$ 1.02
60	Weld	Tab welding to rail	$ 0.15	cm	15			$ 2.25
70	Machining Setup, Install and remove	Setup for adapter machining	$ 1.30	unit	1			$ 1.30
80	Machining		$ 0.04	cm^3	3	Material - Steel	3	$ 0.36
90	Threading, External (machining)		$ 0.10		1.5	Material - Steel	3	$ 0.45
100	Weld	Flange welding to adapter	$ 0.15	cm	3			$ 0.45
110	Assemble, 1 kg, Loose	Assemble adapter to rail	$ 0.06	unit				$ -
120	Assemble, 1 kg, Loose	Put M5 bolt	$ 0.06	unit	2			$ 0.12
130	Ratchet <= 6.35 mm	Tighten M5 nut	$ 0.50	unit	2			$ 1.00
							Sub Total	**$ 12.24**

ItemOrder	Fastener	Use	UnitCost	Size1	Unit1	Size2	Unit2	Quantity	Sub Total
10	Bolt, Grade 8.8 (SAE 5)		0.02	5	mm	10	mm	2	$ 0.04
								Sub Total	**$ 0.04**

ItemOrder	Tooling	Use	UnitCost	Unit	Quantity	PVF	FracIncld	Sub Total
10	Welds - Welding Fixture		$ 500.00	point	16	3000	1	$ 2.67
							Sub Total	**$ 2.67**

University	Ecole Centrale de Lyon			**Car #**	81	**Part Cost**	$ 19.30
System	Engine and drivetrain	**FileLink1**				**Qty**	1
Assembly	Fuel system	**FileLink2**		**FileLink1**			
Part	Secondary fuel rail mount	**FileLink3**		**FileLink2**		**Extended Cost**	$ 19.30
P/N Base	04003			**FileLink3**			
Suffix	AA						
Details							

ItemOrder	Material	Use	UnitCost	Size1	Unit1	Size2	Unit2	Area Name	Area	Length	Density	Quantity	Sub Total
10	Aluminium, Normal	Mount material	$ 4.20	280	mm	40	mm	Rectangular area 280mm x 40mm	1.12E-02	0.04	2 710.00	1	$ 5.10
												Sub Total	**$ 5.10**

ItemOrder	Process	Use	UnitCost	Unit	Quantity	Multiplier	Mult. Val.	Sub Total
10	Machining Setup, Install and remove	Setup for first machining phase	$ 1.30	unit	1			$ 1.30
20	Machining		$ 0.04	cm^3	120	Material - Aluminium	1	$ 4.80
30	Machining Setup, Change	Setup for second machining phase	$ 0.65	unit	1			$ 0.65
40	Machining		$ 0.04	cm^3	20	Material - Aluminium	1	$ 0.80
50	Machining Setup, Change	Setup for last machining phase	$ 0.65	unit	1			$ 0.65
60	Machining		$ 0.04	cm^3	150	Material - Aluminium	1	$ 6.00
							Sub Total	**$ 14.20**

University	Ecole Centrale de Lyon			**Car #**	81	**Part Cost**	$ 1.72
System	Engine and drivetrain	**FileLink1**				**Qty**	2
Assembly	Fuel system	**FileLink2**		**FileLink1**			
Part	Fuel pump tab	**FileLink3**		**FileLink2**		**Extended Cost**	$ 3.44
P/N Base	04004			**FileLink3**			
Suffix	AA						
Details	Steel tab for fuel pump attachment						

ItemOrder	Material	Use	UnitCost	Size1	Unit1	Size2	Unit2	Area Name	Area	Length	Density	Quantity	Sub Total
10	Steel, Mild	Tab material	$ 2.25	32	mm	27	mm	Rectangular area 32mm x 27mm	8.64E-04	4.00E-03	7 800.00	1	$ 0.06
												Sub Total	**$ 0.06**

ItemOrder	Process	Use	UnitCost	Unit	Quantity	Multiplier	Mult. Val.	Sub Total
10	Machining Setup, Install and remove		$ 1.30	unit	1			$ 1.30
20	Laser cut		$ 0.01	cm	12	Material - Steel	3	$ 0.36
							Sub Total	**$ 1.66**

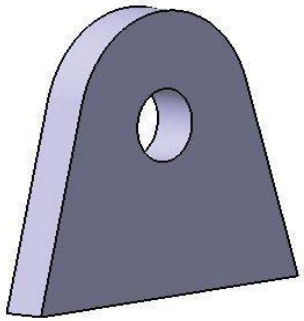

University	Ecole Centrale de Lyon			**Car #**	81	**Part Cost**	$ 1.89
System	Engine and drivetrain	**FileLink1**				**Qty**	1
Assembly	Fuel system	**FileLink2**		**FileLink1**			
Part	Fuel pressure regulator tab	**FileLink3**		**FileLink2**		**Extended Cost**	$ 1.89
P/N Base	04005			**FileLink3**			
Suffix	AA						
Details	Steel tab						

ItemOrder	Material	Use	UnitCost	Size1	Unit1	Size2	Unit2	Area Name	Area	Length	Density	Quantity	Sub Total
10	Steel, Mild	Tab material	$ 2.25	46	mm	22	mm	Rectangular area 46mm x 22mm	1.01E-03	0.003	7 800.00	1	$ 0.05
												Sub Total	**$ 0.05**

ItemOrder	Process	Use	UnitCost	Unit	Quantity	Multiplier	Mult. Val.	Sub Total
10	Machining Setup, Install and remove		$ 1.30	unit	1			$ 1.30
20	Laser cut		$ 0.01	cm	18	Material - Steel	3	$ 0.54
							Sub Total	**$ 1.84**

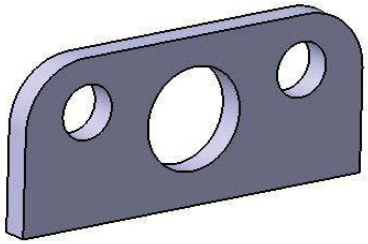

University	Ecole Centrale de Lyon			**Car #**	81	**Part Cost**	$ 1.85
System	Engine and drivetrain	**FileLink1**				**Qty**	1
Assembly	Fuel system	**FileLink2**		**FileLink1**			
Part	Fuel pump left mount	**FileLink3**		**FileLink2**		**Extended Cost**	$ 1.85
P/N Base	04006			**FileLink3**			
Suffix	AA						
Details							

ItemOrder	Material	Use	UnitCost	Size1	Unit1	Size2	Unit2	Area Name	Area	Length	Density	Quantity	Sub Total
10	Aluminum, Normal	Mount material	$ 4.20	128	mm	32	mm	Rectangular area 128mm x 32mm	4.10E-03	2.00E-03	2 710.00	1	$ 0.09
												Sub Total	**$ 0.09**

ItemOrder	Process	Use	UnitCost	Unit	Quantity	Multiplier	Mult. Val.	Sub Total
10	Machining Setup, Install and remove		$ 1.30	unit	1			$ 1.30
20	Laser cut		$ 0.01	cm	46	Material - Alumium	1	$ 0.46
							Sub Total	**$ 1.76**

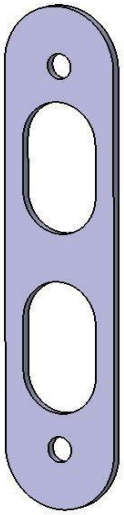

University	Ecole Centrale de Lyon			**Car #**	81	**Part Cost**	$ 2.94
System	Engine and drivetrain	**FileLink1**				**Qty**	1
Assembly	Fuel system	**FileLink2**		**FileLink1**			
Part	Fuel pump right mount	**FileLink3**		**FileLink2**		**Extended Cost**	$ 2.94
P/N Base	04007			**FileLink3**			
Suffix	AA						
Details							

ItemOrder	Material	Use	UnitCost	Size1	Unit1	Size2	Unit2	Area Name	Area	Length	Density	Quantity	Sub Total
10	Aluminum, Normal	Mount material	$ 4.20	214	mm	32	mm	Rectangular area 214mm x 32mm	6.85E-03	2.00E-03	2 710.00	1	$ 0.16
												Sub Total	**$ 0.16**

ItemOrder	Process	Use	UnitCost	Unit	Quantity	Multiplier	Mult. Val.	Sub Total
10	Machining Setup, Install and remove		$ 1.30	unit	1			$ 1.30
20	Laser cut		$ 0.01	cm	48	Material - Aluminium	1	$ 0.48
30	Sheet metal bends		$ 0.25	bend	4			$ 1.00
							Sub Total	**$ 2.78**

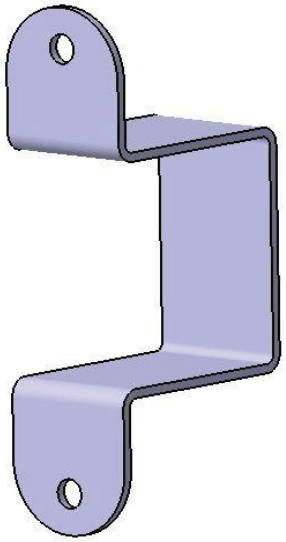

University	Ecole Centrale de Lyon	**Car #**	81	**Asm Cost**	$ 226.25
System	Engine and drivetrain			**Qty**	1
Assembly	Air Intake system	**FileLink1**			
P/N Base	A0005	**FileLink2**		**Extended Cost**	$ 226.25
Suffix	AA	**FileLink3**			
Details	Air intake assembly				

ItemOrder	Part	Part Cost	Quantity	Sub Total
10	Upper plenum	$ 51.98	1	$ 51.98
20	Bottom plenum ring	$ 5.43	1	$ 5.43
30	Bottom plenum shape	$ 4.54	1	$ 4.54
40	Bottom plenum plate	$ 3.54	1	$ 3.54
50	Inlet pipe	$ 2.06	4	$ 8.22
60	Pipe end	$ 6.67	4	$ 26.67
70	Injector housing	$ 8.32	4	$ 33.28
80	Fuel rail tab	$ 2.26	1	$ 2.26
90	Manifold attachment	$ 1.74	2	$ 3.48
			Sub Total	**$ 139.41**

ItemOrder	Material	Use	UnitCost	Size1	Unit1	Size2	Unit2	Area Name	Area	Length	Density	Quantity	Sub Total
10	Hose, Rubber	Rubber brushing	$ 9.00	50	mm							0.16	$ 1.44
												Sub Total	**$ 1.44**

ItemOrder	Process	Use	UnitCost	Unit	Quantity	Multiplier	Mult. Val.	Sub Total
10	Weld	Weld bottom plenum ring to shape	$ 0.15	cm	82		1	$ 12.30
20	Weld	Weld bottom plenum shape to plate	$ 0.15	cm	82		1	$ 12.30
30	Weld	Weld injector housing to tube end	$ 0.15	cm	44		1	$ 6.60
40	Weld	Weld inlet tube to tube end	$ 0.15	cm	51		1	$ 7.65
50	Weld	Weld inlet tube to bottom plenum plate	$ 0.15	cm	51		1	$ 7.65
60	Weld	Weld fuel rail tab to inlet pipes	$ 0.15	cm	6		1	$ 0.90
70	Assemble, 1 kg, Interference	Assemble rubber brushing to engine	$ 0.19	unit	4		1	$ 0.76
80	Assemble, 1kg, Loose	Put clamp	$ 0.06	unit	8		1	$ 0.48
90	Assemble, 3 kg, Interference	Assemble bottom plenum in rubber brushings	$ 0.56	unit	1		1	$ 0.56
100	Screwdriver > 1 Turn	Tighten clamp	$ 0.50	unit	8		1	$ 4.00
110	Ratchet <= 6.35 mm	Tigten M6 reinforce bolt on bottom plenum	$ 0.50	unit	2		1	$ 1.00
120	Reaction Tool <= 6.35 mm	Reaction tool for M6 nut	$ 0.25	unit	2		1	$ 0.50
130	Assemble, 1kg, Loose	Assemble upper plenum on bottom plenum	$ 0.06	unit	1		1	$ 0.06
140	Ratchet <= 6.35 mm	Tighten M4 bolt	$ 0.50	unit	20		1	$ 10.00
150	Reaction Tool <= 6.35 mm	Reaction tool for M4 nut	$ 0.25	unit	20		1	$ 5.00
160	Ratchet <= 6.35 mm	Tigten M6 reinforcebolt on upper plenum	$ 0.50	unit	2		1	$ 1.00
170	Reaction Tool <= 6.35 mm	Reaction tool for M6 nut	$ 0.25	unit	2		1	$ 0.50
							Sub Total	**$ 71.26**

ItemOrder	Fastener	Use	UnitCost	Size1	Unit1	Size2	Unit2	Quantity	Sub Total
10	Hose Clamp, Miniature Bolt	Assemble rubber brushing on engine and plenum	$ 0.72	55	mm			8	$ 5.76
20	Bolt, Grade 8.8 (SAE 5)	Bolt for plenum reinforcement	$ 0.63	6	mm	170	mm	2	$ 1.26
30	Nut, Grade 8.8 (SAE 5)	Nut for plenum reinforcement	$ 0.03	6	mm			6	$ 0.18
40	Washer, Grade 8.8 (SAE 5)	Washers for plenum reinforcement	$ 0.01	6	mm			8	$ 0.08
50	Bolt, Grade 8.8 (SAE 5)	Assemble upper plenum on bottom plenum	$ 0.02	4	mm	12	mm	20	$ 0.40
60	Nut, Grade 8.8 (SAE 5)	Assemble upper plenum on bottom plenum	$ 0.02	4	mm			20	$ 0.40
70	Washer, Grade 8.8 (SAE 5)	Assemble upper plenum on bottom plenum	$ 0.01	4	mm			40	$ 0.40
								Sub Total	**$ 8.48**

ItemOrder	Tooling	Use	UnitCost	Unit	Quantity	PVF	Frac. Incl.	Sub Total
10	Welds - Welding Fixture		$ 500.00	point	34	3000	1	$ 5.67
							Sub Total	**$ 5.67**

University	Ecole Centrale de Lyon			**Car #**	81	**Part Cost**	$ 51.98
System	Engine and drivetrain	**FileLink1**				**Qty**	1
Assembly	Air intake system	**FileLink2**		**FileLink1**			
Part	Upper plenum	**FileLink3**		**FileLink2**		**Extended Cost**	$ 51.98
P/N Base	05001			**FileLink3**			
Suffix	AA						
Details	Carbon fiber plenum upper part						

ItemOrder	Material	Use	UnitCost	Size1	Unit1	Size2	Unit2	Area Name	Area	Length	Density	Quantity	Sub Total
10	Carbon Fiber, 1 Ply	Upper Plenum part 1	$ 200.00	0.07	kg							4	$ 13.97
20	Carbon Fiber, 1 Ply	Upper Plenum part 2	$ 200.00	0.03	kg							4	$ 6.03
30	Adhesive	Assemble 2 plenum parts, cost included in process	$ -										$ -
												Sub Total	**$ 20.00**

ItemOrder	Process	Use	UnitCost	Unit	Quantity	Multiplier	Mult. Val.	Sub Total
10	Lamination, Manual	Upper Plenum part 1	$ 35.00	m^2	0.095	repeat 4	4	$ 13.30
20	Resin application, Infusion Molding	Upper Plenum part 1	$ 2.50	m^2	0.095			$ 0.24
30	Cure, Oven	Upper Plenum part 1	$ 20.00	m^2	0.095			$ 1.90
40	Lamination, Manual	Upper Plenum part 2	$ 35.00	m^2	0.041	repeat 4	4	$ 5.74
50	Resin application, Infusion Molding	Upper Plenum part 2	$ 2.50	m^2	0.041			$ 0.10
60	Cure, Oven	Upper Plenum part 2	$ 20.00	m^2	0.041			$ 0.82
70	Liquid Applicator Gun	Glue 2 plenum parts together	$ 0.02	cm	80			$ 1.60
80	Assemble, 1 kg, Line-on-Line	Glue 2 plenum parts together	$ 0.13	unit	1			$ 0.13
90	Drilled holes < 25.4 mm dia.	For plenum assembly	$ 0.35	hole	22			$ 7.70
							Sub Total	**$ 31.53**

ItemOrder	Tooling	Use	UnitCost	Unit	Quantity	PVF	FracIncld	Sub Total
10	Lamination - Composite Tool	Mold Upper Plenum part 1	$ 10 000	m^2	0.095	3000	1	$ 0.32
20	Lamination - Composite Tool	Mold Upper Plenum part 1	$ 10 000	m^2	0.041	3000	1	$ 0.14
							Sub Total	**$ 0.45**

University	Ecole Centrale de Lyon			**Car #**	81	**Part Cost**	$ 5.43
System	Engine and drivetrain	**FileLink1**				**Qty**	1
Assembly	Air intake system	**FileLink2**		**FileLink1**			
Part	Bottom plenum ring	**FileLink3**		**FileLink2**		**Extended Cost**	$ 5.43
P/N Base	05002			**FileLink3**			
Suffix	AA						
Details							

ItemOrder	Material	Use	UnitCost	Size1	Unit1	Size2	Unit2	Area Name	Area	Length	Density	Quantity	Sub Total
10	Aluminum, Normal (per kg)	Ring material	$ 4.20	420	mm	190	mm	Rectangular area 420mm x 190 mm	7.98E-02	2.00E-03	2 700.00	4.31E-01	$ 1.81
												Sub Total	**$ 1.81**

ItemOrder	Process	Use	UnitCost	Unit	Quantity	Multiplier	Mult. Val.	Sub Total
10	Machining Setup, Install and remove	Setup for laser cutting	$ 1.30		1			$ 1.30
20	Laser Cut	Outline shape and holes	$ 0.01	cm	232	Material - Aluminium	1	$ 2.32
							Sub Total	**$ 3.62**

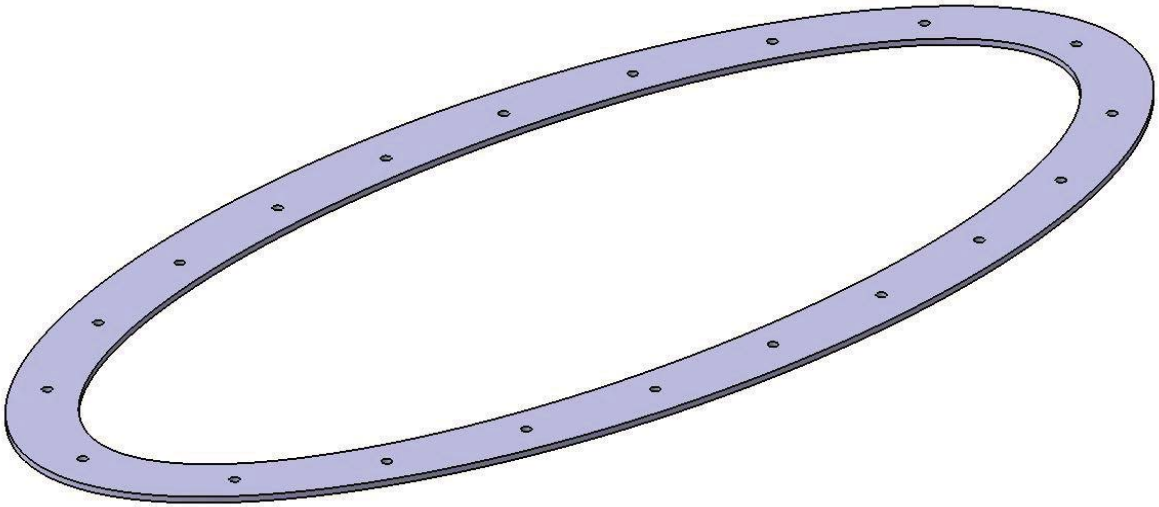

University	Ecole Centrale de Lyon			**Car #**	81	**Part Cost**	$ 4.54
System	Engine and drivetrain	**FileLink1**				**Qty**	1
Assembly	Air intake system	**FileLink2**		**FileLink1**			
Part	Bottom plenum shape	**FileLink3**		**FileLink2**		**Extended Cost**	$ 4.54
P/N Base	05003			**FileLink3**			
Suffix	AA						
Details							

ItemOrder	Material	Use	UnitCost	Size1	Unit1	Size2	Unit2	Area Name	Area	Length	Density	Quantity	Sub Total
10	Aluminum, Normal (per kg)	Shape material	$ 4.20	830	mm	17	mm	Rectangular area 895mm x 17mm	1.30E-02	2.00E-03	2,700.00	7.02E-02	$ 0.29
												Sub Total	**$ 0.29**

ItemOrder	Process	Use	UnitCost	Unit	Quantity	Multiplier	Mult. Val.	Sub Total
10	Machining Setup, Install and remove	Setup for laser cutting	$ 1.30		1			$ 1.30
20	Laser Cut	Cutout shapes	$ 0.01	cm	181	Material - Aluminium	1	$ 1.81
30	Sheet metal bends		$ 0.25	bend	2			$ 0.50
40	Weld		$ 0.15	cm	2			$ 0.30
							Sub Total	**$ 3.91**

ItemOrder	Tooling	Use	UnitCost	Unit	Quantity	PVF	FracIncld	Sub Total
10	Welds - Welding Fixture		$ 500.00	point	2	3000	1	$ 0.33
							Sub Total	**$ 0.33**

University	Ecole Centrale de Lyon			**Car #**	81	**Part Cost**	$ 3.54
System	Engine and drivetrain	**FileLink1**				**Qty**	1
Assembly	Air intake system	**FileLink2**		**FileLink1**			
Part	Bottom plenum plate	**FileLink3**		**FileLink2**		**Extended Cost**	$ 3.54
P/N Base	05004			**FileLink3**			
Suffix	AA						
Details							

ItemOrder	Material	Use	UnitCost	Size1	Unit1	Size2	Unit2	Area Name	Area	Length	Density	Quantity	Sub Total
10	Aluminum, Normal (per kg)	Plate material	$ 4.20	375	mm	145	mm	Rectangular area 375 mm x 145 mm	3.70E-02	2.00E-03	2,710	2.01E-01	$ 0.84
												Sub Total	**$ 0.84**

ItemOrder	Process	Use	UnitCost	Unit	Quantity	Multiplier	Mult. Val.	Sub Total
10	Machining Setup, Install and remove	Setup for laser cutting	$ 1.30		1			$ 1.30
20	Laser Cut	Cutout shapes	$ 0.01	cm	140	Material - Aluminium	1	$ 1.40
							Sub Total	**$ 2.70**

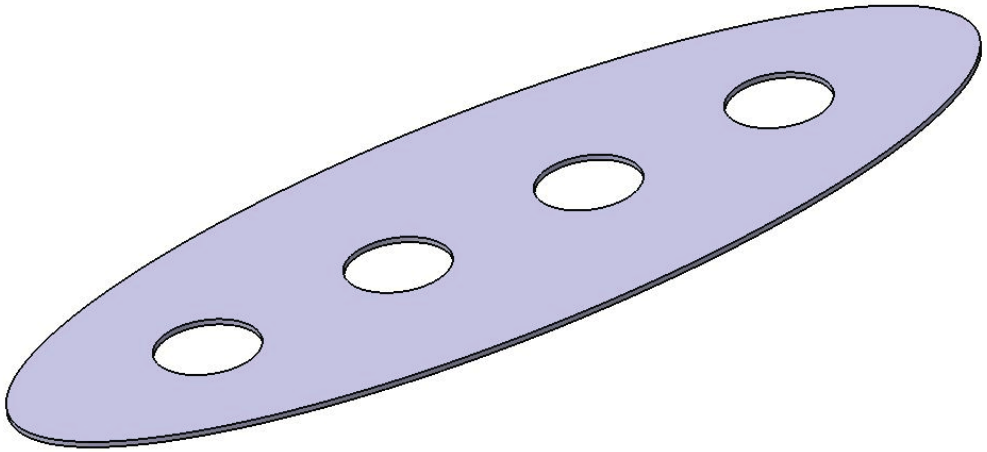

University	Ecole Centrale de Lyon			**Car #**	81	**Part Cost**	$ 2.06
System	Engine and drivetrain	**FileLink1**				**Qty**	4
Assembly	Air intake system	**FileLink2**		**FileLink1**			
Part	Inlet pipe	**FileLink3**		**FileLink2**		**Extended Cost**	$ 8.22
P/N Base	05005			**FileLink3**			
Suffix	AA						
Details							

ItemOrder	Material	Use	UnitCost	Size1	Unit1	Size2	Unit2	Area Name	Area	Length	Density	Quantity	Sub Total
10	Aluminum, Normal	shape	$ 4.20	40	mm	2	mm	Round 40mm x 2mm	2.39E-04	1.50E-01	2,700.00	9.67E-02	$ 0.41
												Sub Total	**$ 0.41**

ItemOrder	Process	Use	UnitCost	Unit	Quantity	Multiplier	Mult. Val.	Sub Total
10	Tube cut		$ 0.15	cm	1			$ 0.15
20	Tube end preperation for welding		$ 0.75	end	2			$ 1.50
							Sub Total	**$ 1.65**

University	Ecole Centrale de Lyon			**Car #**	81	**Part Cost**	$ 6.67
System	Engine and drivetrain	**FileLink1**				**Qty**	4
Assembly	Air intake system	**FileLink2**		**FileLink1**			
Part	Pipe end	**FileLink3**		**FileLink2**		**Extended Cost**	$ 26.67
P/N Base	05006			**FileLink3**			
Suffix	AA						
Details							

ItemOrder	Material	Use	UnitCost	Size1	Unit1	Size2	Unit2	Area Name	Area	Length	Density	Quantity	Sub Total
10	Aluminum, Normal (per kg)	Pipe end material	$ 4.20	45	mm			Round 45mm	1.59E-03	7.50E-02	2,710.00	3.23E-01	$ 1.36
												Sub Total	**$ 1.36**

ItemOrder	Process	Use	UnitCost	Unit	Quantity	Multiplier	Mult. Val.	Sub Total
10	Machining Setup, Install and remove		$ 1.30	unit	1			$ 1.30
20	Machining		$ 0.04	cm^3	82	Material - Aluminium	1	$ 3.28
30	Machining Setup, Change		$ 0.65	unit	1			$ 0.65
40	Machining		$ 0.04	cm^3	2	Material - Aluminium	1	$ 0.08
							Sub Total	**$ 5.31**

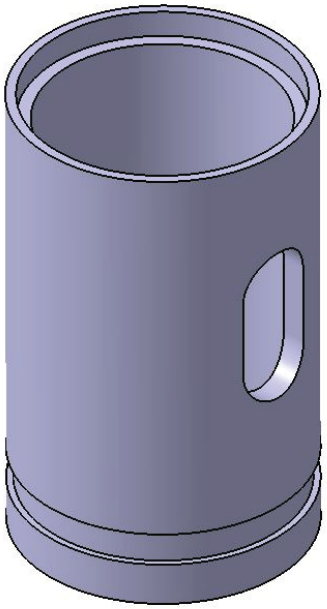

Vue de face
Echelle : 1:1

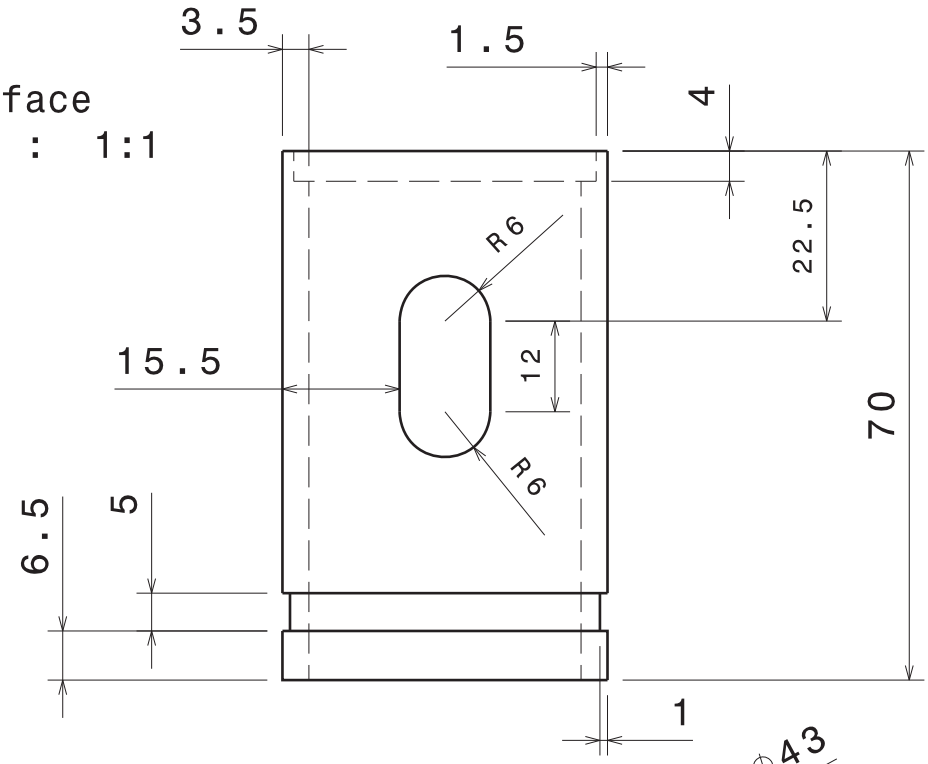

Vue de dessus
Echelle : 1:1

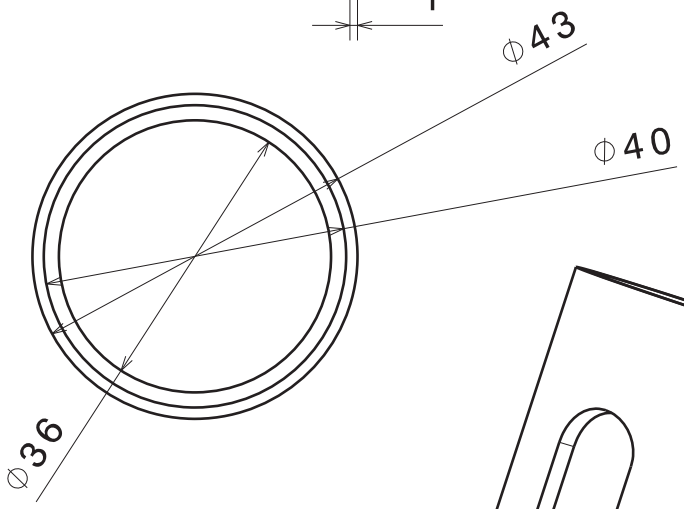

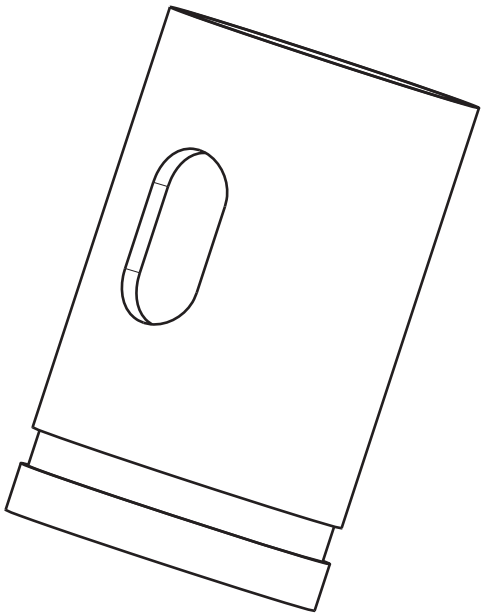

Aluminium laissé libre au fabricant

Tolérances générales ISO 2768 - mK

Taille A4		Ecurie Piston Sport Auto	
Dessiné par Prunier Ludovic	Date 18/01/2014	Désignation Raccord entre tubulures	
Coordonnées 06.31.80.81.08 ludovic.prunier@ecl2015.ec-lyon.fr		Quantité 4	Matériau Aluminium	Version v1.0
Vérifié par	Date	Echelle 1:1	Numéro du plan 14 B068	Feuille 1/1

University	Ecole Centrale de Lyon			**Car #**	81	**Part Cost**	$ 8.32
System	Engine and drivetrain	**FileLink1**				**Qty**	4
Assembly	Air intake system	**FileLink2**		**FileLink1**			
Part	Injector housing	**FileLink3**		**FileLink2**		**Extended Cost**	$ 33.28
P/N Base	05007			**FileLink3**			
Suffix	AA						
Details							

ItemOrder	Material	Use	UnitCost	Size1	Unit1	Size2	Unit2	Area Name	Area	Length	Density	Quantity	Sub Total
10	Aluminium, Normal	Material for part	$ 4.20	25	mm			Round 25mm	4.91E-04	5.00E-02	2,710.00	2.453E-05	$ 0.28
												Sub Total	**$ 0.28**

ItemOrder	Process	Use	UnitCost	Unit	Quantity	Multiplier	Mult. Val.	Sub Total
10	Machining Setup, Install and		$ 1.30		1			$ 1.30
20	Machining		$ 0.65		6	Material - Aluminium	1	$ 3.90
30	Machining Setup, Change		$ 0.04		1			$ 0.04
40	Machining		$ 0.70		4	Material - Aluminium	1	$ 2.80
							Sub Total	**$ 8.04**

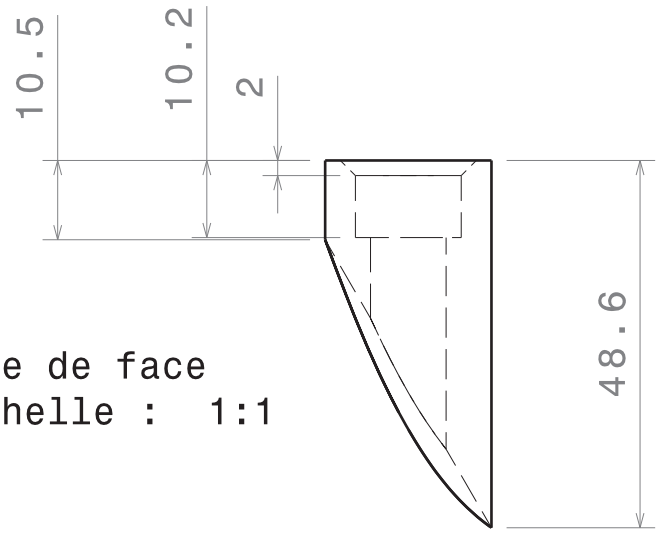

Vue de face
Echelle : 1:1

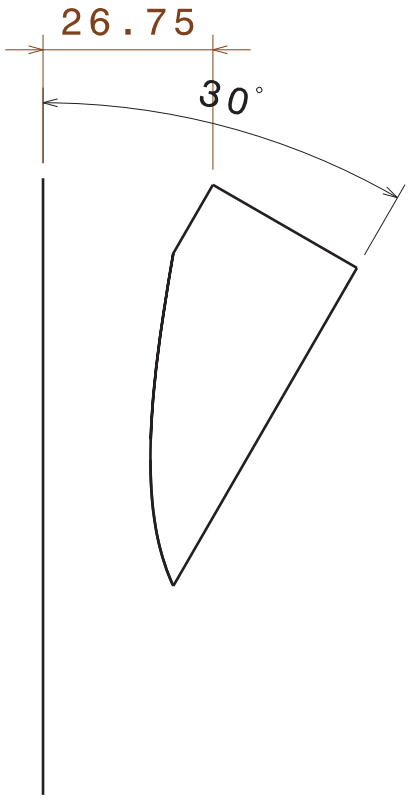

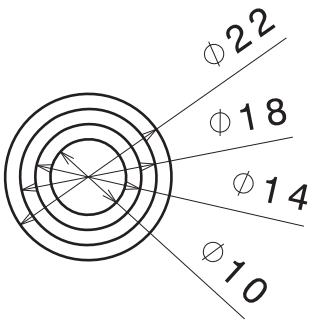

Vue de dessus
Echelle : 1:1

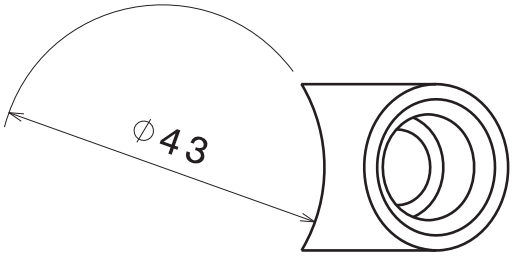

Aluminium laissé libre au fabricant

Tolérances générales ISO 2768 - mK

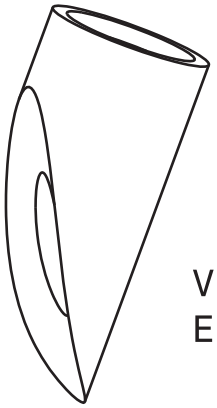

Vue isométrique
Echelle : 1:1

Taille A4		Ecurie Piston Sport Auto	
Dessiné par Prunier Ludovic	Date 04/02/2014	Désignation Supports inserts injection	
Coordonnées 06.31.80.81.08 ludovic.prunier@ecl2015.ec-lyon.fr		Quantité 4	Matériau Aluminium	Version v1.0
Vérifié par	Date	Echelle 1:1	Numéro du plan 14 B069	Feuille 1/1

University	Ecole Centrale de Lyon			**Car #**	81	**Part Cost**	$ 2.26
System	Engine and drivetrain	**FileLink1**				**Qty**	1
Assembly	Air intake system	**FileLink2**		**FileLink1**			
Part	Fuel rail tab	**FileLink3**		**FileLink2**		**Extended Cost**	$ 2.26
P/N Base	05008			**FileLink3**			
Suffix	AA						
Details							

ItemOrder	Material	Use	UnitCost	Size1	Unit1	Size2	Unit2	Area Name	Area	Length	Density	Quantity	Sub Total
10	Aluminum, Normal	Tab material	$ 4.20	300	mm	30	mm	Rectangular area 300mm x 30mm	9.00E-03	3.00E-03	2,710.00	2.70E-05	$ 0.31
												Sub Total	**$ 0.31**

ItemOrder	Process	Use	UnitCost	Unit	Quantity	Multiplier	Mult. Val.	Sub Total
10	Machining Setup, Install and remove	Setup for laser cutting	$ 1.30		1			$ 1.30
20	Laser cut	Cutout shape	$ 0.01	cm	65	Material - Aluminium	1	$ 0.65
							Sub Total	**$ 1.95**

University	Ecole Centrale de Lyon			**Car #**	81	**Part Cost**	$ 1.74
System	Engine and drivetrain	**FileLink1**				**Qty**	2
Assembly	Air intake system	**FileLink2**		**FileLink1**			
Part	Manifold attachment	**FileLink3**		**FileLink2**		**Extended Cost**	$ 3.48
P/N Base	05009			**FileLink3**			
Suffix	AA						
Details							

ItemOrder	Material	Use	UnitCost	Size1	Unit1	Size2	Unit2	Area Name	Area	Length	Density	Quantity	Sub Total
10	Aluminum, Normal	Tab material	$ 4.20	150	mm	20	mm	Rectangular area 300 mm x 30mm	3.00E-03	3.00E-03	2,710.00	9.00E-06	$ 0.10
												Sub Total	**$ 0.10**

ItemOrder	Process	Use	UnitCost	Unit	Quantity	Multiplier	Mult. Val.	Sub Total
10	Machining Setup, Install and remove	Setup for laser cutting	$ 1.30		1			$ 1.30
20	Laser cut	Cutout shape	$ 0.01	cm	34	Material - Aluminium	1	$ 0.34
							Sub Total	**$ 1.64**

University	Ecole Centrale de Lyon	**Car #**	81	**Asm Cost**	$ 180.62
System	Engine and drivetrain			**Qty**	1
Assembly	Throttle body	**FileLink1**			
P/N Base	A0006	**FileLink2**		**Extended Cost**	$ 180.62
Suffix	AA	**FileLink3**			
Details					

ItemOrder	Part	Part Cost	Quantity	Sub Total
10	Throttle flange	$ 5.18	1	$ 5.18
20	Restrictor	$ 5.73	1	$ 5.73
30	Throttle housing	$ 4.28	1	$ 4.28
40	Cable housing axle	$ 2.73	1	$ 2.73
50	TPS axle	$ 2.71	1	$ 2.71
60	Throttle plate	$ 1.49	1	$ 1.49
70	Cable housing	$ 4.57	1	$ 4.57
80	Axle stop	$ 2.04	1	$ 2.04
90	Ram pipe	$ 12.50	1	$ 12.50
100	Tab	$ 1.94	2	$ 3.88
110	Throttle body bracket	$ 2.92	1	$ 2.92
120	Throttle body upper collar	$ 0.51	1	$ 0.51
130	Throttle body bottom colar	$ 1.91	1	$ 1.91
			Sub Total	**$ 50.43**

ItemOrder	Material	Use	UnitCost	Size1	Unit1	Size2	Unit2	Area Name	Area	Length	Density	Quantity	Sub Total
10	Air filter		$ 0.15	cm^2	420							1	$ 63.00
20	Spring, Tension (General)		$ 1.00									1	$ 1.00
30	Spring, Torsion (General)		$ 1.00									1	$ 1.00
40	Seal, O-Ring, Elastomer	Sealing with air filter	$ 0.05									1	$ 0.05
50	Seal, O-Ring, Elastomer	Sealing with plenum	$ 0.05									1	$ 0.05
60	Cable, Pull	Throttle cable	$ 15.00	3.5	m							3.5	$ 52.50
70	Cable Adjuster		$ 1.00									1	$ 1.00
												Sub Total	**$ 118.60**

ItemOrder	Process	Use	UnitCost	Unit	Quantity	Multiplier	Mult. Val.	Sub Total
10	Weld	Tab on frame	$ 0.15	cm	4			$ 0.60
20	Assemble, 1 kg, Interference	Assemble throttle housing on restrictor	$ 0.19	unit	1			$ 0.19
30	Assemble, 1 kg, Interference	Assemble flange on restrictor	$ 0.19	unit	1			$ 0.19
40	Assemble, 1 kg, Interference	Assemble ram pipe on throttle housing	$ 0.19	unit	1			$ 0.19
50	Assemble, 1 kg, Line-on-Line	Assemble throttle plae in restrictor	$ 0.13	unit	1			$ 0.13
60	Assemble, 1 kg, Line-on-Line	Assemble TPS axle	$ 0.13	unit	1			$ 0.13
70	Assemble, 1 kg, Line-on-Line	Assemble cable housing axle	$ 0.13	unit	1			$ 0.13
80	Assemble, 1 kg, Line-on-Line	Assemble negative stop	$ 0.13	unit	1			$ 0.13
90	Ratchet <= 6.35 mm	Tighten M5 bolt	$ 0.50	unit	1			$ 0.50
100	Reaction Tool <= 6.35 mm	Reaction tool for M5 nut	$ 0.25	unit	1			$ 0.25
110	Assemble, 1 kg, Line-on-Line	Assemble torsion spring	$ 0.13	unit	1			$ 0.13
120	Assemble, 1kg, Loose	Assemble axle stop	$ 0.13	unit	1			$ 0.13
130	Ratchet <= 6.35 mm	Tighten M5 bolt	$ 0.50	unit	1			$ 0.50
140	Assemble, 1kg, Loose	Assemble seal on throttle body	$ 0.06	unit	2			$ 0.12

150	Assemble, 1kg, Loose	Assemble throttle body on plenum	$ 0.06	unit	1			$ 0.06
160	Ratchet <= 6.35 mm	Tighten M6 bolt	$ 0.50	unit	2			$ 1.00
170	Reaction Tool <= 6.35 mm	Reaction tool for M6 nut	$ 0.25	unit	2			$ 0.50
180	Assemble, 1kg, Loose	Assemble collar	$ 0.06	unit	1			$ 0.06
190	Ratchet <= 6.35 mm	Tighten M5 bolt	$ 0.50	unit	2			$ 1.00
200	Assemble, 1kg, Loose	Assemble throttle bracket to collar	$ 0.06	unit	1			$ 0.06
210	Ratchet <= 6.35 mm	Tighten M6 bolt	$ 0.50	unit	1			$ 0.50
220	Assemble, 1kg, Loose	Assemble bracket on frame	$ 0.06	unit	1			$ 0.06
230	Ratchet <= 6.35 mm	Tighten M6 bolt	$ 0.50	unit	2			$ 1.00
240	Reaction Tool <= 6.35 mm	Reaction tool for M6 nut	$ 0.25	unit	2			$ 0.50
250	Assemble, 1kg, Loose	Assemble air filter and clamp	$ 0.06	unit	1			$ 0.06
260	Screwdriver > 1 Turn	Tighten clamp	$ 0.50	unit	1			$ 0.50
270	Assemble, 1kg, Loose	Assemble cable adjuster	$ 0.06	unit	1			$ 0.06
280	Hand, Loose <= 6.35 mm	Tighten throttle adjuster	$ 0.25	unit	1			$ 0.25
290	Assemble, 1kg, Loose	Assemble cable	$ 0.06	unit	1			$ 0.06
							Sub Total	**$ 8.99**

ItemOrder	Fastener	Use	UnitCost	Size1	Unit1	Size2	Unit2	Quantity	Sub Total
10	Bolt, Grade 8.8 (SAE 5)	Assemble axle stop	$ 0.03	5	mm	15	mm	1	$ 0.03
20	Bolt, Grade 8.8 (SAE 5)	Throttle negative stop	$ 0.03	5	mm	20	mm	1	$ 0.03
30	Bolt, Grade 8.8 (SAE 5)	Assemble collar	$ 0.02	5	mm	10	mm	2	$ 0.04
40	Bolt, Grade 8.8 (SAE 5)	Assemble bracket to collar	$ 0.03	6	mm	10	mm	1	$ 0.03
50	Bolt, Grade 8.8 (SAE 5)	Assemble throttle bracket on frame	$ 0.04	6	mm	15	mm	2	$ 0.08
60	Nut, Grade 8.8 (SAE 5)	Assemble throttle bracket on frame	$ 0.03	6	mm			2	$ 0.06
70	Washer, Grade 8.8 (SAE 5)	Assemble throttle bracket on frame	$ 0.01	6	mm			4	$ 0.04
80	Bolt, Grade 8.8 (SAE 5)	Assemble throttle body on plenum	$ 0.04	6	mm	20	mm	2	$ 0.08
90	Nut, Grade 8.8 (SAE 5)	Assemble throttle body on plenum	$ 0.03	6	mm			2	$ 0.06
100	Washer, Grade 8.8 (SAE 5)	Assemble throttle body on plenum	$ 0.01	6	mm			2	$ 0.02
110	Hose Clamp, Miniature Bolt	Assemble air filter	$ 0.80	75	mm			1	$ 0.80
								Sub Total	**$ 1.27**

ItemOrder	Tooling	Use	UnitCost	Unit	Quantity	PVF	FractionIncluded	Sub Total
10	Welds - Welding Fixture		$ 500.00	point	8	3000	1	$ 1.33
							Sub Total	**$ 1.33**

University	Ecole Centrale de Lyon			**Car #**	81	**Part Cost**	$ 5.18
System	Engine and drivetrain	**FileLink1**				**Qty**	1
Assembly	Throttle body	**FileLink2**		**FileLink1**			
Part	Throttle flange	**FileLink3**		**FileLink2**		**Extended Cost**	$ 5.18
P/N Base	06001			**FileLink3**			
Suffix	AA						
Details							

ItemOrder	Material	Use	UnitCost	Size1	Unit1	Size2	Unit2	Area Name	Area	Length	Density	Quantity	Sub Total
10	Aluminium, Normal		$ 4.20	80	mm	40	mm	Rectangular area 40x20 mm	3.20E-03	0.02	2 710.00	1	$ 0.73
												Sub Total	**$ 0.73**

ItemOrder	Process	Use	UnitCost	Unit	Quantity	Multiplier	Mult. Val.	Sub Total
10	Machining Setup, Install and remove		$ 1.30	unit	1			$ 1.30
20	Drilled holes < 25.4 mm dia.		$ 0.35	hole	5			$ 1.75
30	Machining		$ 0.04	cm^3	35	Material - Aluminum	1	$ 1.40
							Sub Total	**$ 4.45**

University	Ecole Centrale de Lyon			**Car #**	81	**Part Cost**	$ 5.73
System	Engine and drivetrain	**FileLink1**				**Qty**	1
Assembly	Throttle body	**FileLink2**		**FileLink1**			
Part	Restrictor	**FileLink3**		**FileLink2**		**Extended Cost**	$ 5.73
P/N Base	06002			**FileLink3**			
Suffix	AA						
Details							

ItemOrder	Material	Use	UnitCost	Size1	Unit1	Size2	Unit2	Area Name	Area	Length	Density	Quantity	Sub Total
10	Aluminium, Normal		$ 4.20	42	mm			Round 42mm	1.38E-03	0.10	2 710.00	1	$ 1.58
												Sub Total	**$ 1.58**

ItemOrder	Process	Use	UnitCost	Unit	Quantity	Multiplier	Mult. Val.	Sub Total
10	Machining Setup, Install and remove		$ 1.30	unit	1			$ 1.30
20	Machining		$ 0.04	cm^3	35	Material - Aluminum	1	$ 1.40
30	Machining Setup, Change		$ 0.65	unit	1			$ 0.65
40	Machining		$ 0.04	cm^3	20	Material - Aluminum	1	$ 0.80
							Sub Total	**$ 4.15**

University	Ecole Centrale de Lyon			**Car #**	81	**Part Cost**	$ 4.28
System	Engine and drivetrain	**FileLink1**				**Qty**	1
Assembly	Throttle body	**FileLink2**		**FileLink1**			
Part	Throttle housing	**FileLink3**		**FileLink2**		**Extended Cost**	$ 4.28
P/N Base	06003			**FileLink3**			
Suffix	AA						
Details							

ItemOrder	Material	Use	UnitCost	Size1	Unit1	Size2	Unit2	Area Name	Area	Length	Density	Quantity	Sub Total
10	Aluminium, Normal		$ 4.20	55	mm	45	mm	Rectangular area 45x30 mm	2.48E-03	0.03	2 710.00	1	$ 0.85
												Sub Total	**$ 0.85**

ItemOrder	Process	Use	UnitCost	Unit	Quantity	Multiplier	Mult. Val.	Sub Total
10	Machining Setup, Install and remove		$ 1.30	unit	1			$ 1.30
20	Machining		$ 0.04	cm^3	28	Material - Aluminum	1	$ 1.12
30	Machining Setup, Change		$ 0.65	unit	1			$ 0.65
40	Machining		$ 0.04	cm^3	9	Material - Aluminum	1	$ 0.36
							Sub Total	**$ 3.43**

University	Ecole Centrale de Lyon			**Car #**	81	**Part Cost**	$ 2.73
System	Engine and drivetrain	**FileLink1**				**Qty**	1
Assembly	Throttle body	**FileLink2**		**FileLink1**			
Part	Throttle axle	**FileLink3**		**FileLink2**		**Extended Cost**	$ 2.73
P/N Base	06004			**FileLink3**			
Suffix	AA						
Details							

ItemOrder	Material	Use	UnitCost	Size1	Unit1	Size2	Unit2	Area Name	Area	Length	Density	Quantity	Sub Total
10	Steel, Mild	Axle material	$ 2.25	10	mm			Round 10 mm	7.85E-05	0.04	7 800.00	1	$ 0.06
												Sub Total	**$ 0.06**

ItemOrder	Process	Use	UnitCost	Unit	Quantity	Multiplier	Mult. Val.	Sub Total
10	Machining Setup, Install and remove		$ 1.30	unit	1			$ 1.30
20	Machining		$ 0.04	cm^3	4	Material - Steel	3	$ 0.48
30	Machining Setup, Change		$ 0.65	unit	1			$ 0.65
40	Machining		$ 0.04	cm^3	2	Material - Steel	3	$ 0.24
							Sub Total	**$ 2.67**

University	Ecole Centrale de Lyon			**Car #**	81	**Part Cost**	$ 2.71
System	Engine and drivetrain	**FileLink1**				**Qty**	1
Assembly	Throttle body	**FileLink2**		**FileLink1**			
Part	TPS axle	**FileLink3**		**FileLink2**		**Extended Cost**	$ 2.71
P/N Base	06005			**FileLink3**			
Suffix	AA						
Details							

ItemOrder	Material	Use	UnitCost	Size1	Unit1	Size2	Unit2	Area Name	Area	Length	Density	Quantity	Sub Total
10	Steel, Mild	Axle material	$ 2.25	10	mm			Round 10 mm	7.85E-05	0.03	7 800.00	1	$ 0.04
												Sub Total	**$ 0.04**

ItemOrder	Process	Use	UnitCost	Unit	Quantity	Multiplier	Mult. Val.	Sub Total
10	Machining Setup, Install and remove		$ 1.30	unit	1			$ 1.30
20	Machining		$ 0.04	cm^3	4	Material - Steel	3	$ 0.48
30	Machining Setup, Change		$ 0.65	unit	1			$ 0.65
40	Machining		$ 0.04	cm^3	2	Material - Steel	3	$ 0.24
							Sub Total	**$ 2.67**

University	Ecole Centrale de Lyon			**Car #**	81	**Part Cost**	$ 1.49
System	Engine and drivetrain	**FileLink1**				**Qty**	1
Assembly	Throttle body	**FileLink2**		**FileLink1**			
Part	Throttle plate	**FileLink3**		**FileLink2**		**Extended Cost**	$ 1.49
P/N Base	06006			**FileLink3**			
Suffix	AA						
Details							

ItemOrder	Material	Use	UnitCost	Size1	Unit1	Size2	Unit2	Area Name	Area	Length	Density	Quantity	Sub Total
10	Steel, Mild		$ 2.25	32	mm			Round 32 mm	8.04E-04	5.00E-03	7 800.00	1	$ 0.07
												Sub Total	**$ 0.07**

ItemOrder	Process	Use	UnitCost	Unit	Quantity	Multiplier	Mult. Val.	Sub Total
10	Machining Setup, Install and remove		$ 1.30	unit	1			$ 1.30
20	Machining		$ 0.04	cm^3	1	Material - Steel	3	$ 0.12
							Sub Total	**$ 1.42**

University	Ecole Centrale de Lyon			**Car #**	81	**Part Cost**	$ 4.57
System	Engine and drivetrain	**FileLink1**				**Qty**	1
Assembly	Throttle body	**FileLink2**		**FileLink1**			
Part	Cable housing	**FileLink3**		**FileLink2**		**Extended Cost**	$ 4.57
P/N Base	06007			**FileLink3**			
Suffix	AA						
Details							

ItemOrder	Material	Use	UnitCost	Size1	Unit1	Size2	Unit2	Area Name	Area	Length	Density	Quantity	Sub Total
10	Steel, Mild		$ 2.25	80	mm	60	mm	Rectangular area 80x60 mm	4.80E-03	2.00E-03	7 800.00	1	$ 0.17
												Sub Total	**$ 0.17**

ItemOrder	Process	Use	UnitCost	Unit	Quantity	Multiplier	Mult. Val.	Sub Total
10	Machining Setup, Install and remove		$ 1.30	unit	1			$ 1.30
20	Laser cut		$ 0.01	cm	35	Material - Steel	3	$ 1.05
30	Sheet metal bends		$ 0.25	bend	3			$ 0.75
40	Weld		$ 0.15	cm	2			$ 0.30
							Sub Total	**$ 3.40**

ItemOrder	Tooling	Use	UnitCost	Unit	Quantity	PVF	FracIncld	Sub Total
10	Welds - Welding Fixture		$ 500.00	point	6	3000	1	$ 1.00
							Sub Total	**$ 1.00**

University	Ecole Centrale de Lyon			**Car #**	81	**Part Cost**	$ 2.04
System	Engine and drivetrain	**FileLink1**				**Qty**	1
Assembly	Throttle body	**FileLink2**		**FileLink1**			
Part	Axle stop	**FileLink3**		**FileLink2**		**Extended Cost**	$ 2.04
P/N Base	06008			**FileLink3**			
Suffix	AA						
Details							

ItemOrder	Material	Use	UnitCost	Size1	Unit1	Size2	Unit2	Area Name	Area	Length	Density	Quantity	Sub Total
10	Steel, Mild	Axle material	$ 2.25	25	mm			Round 25 mm	4.91E-04	0.03	7 800.00	1	$ 0.26
												Sub Total	**$ 0.26**

ItemOrder	Process	Use	UnitCost	Unit	Quantity	Multiplier	Mult. Val.	Sub Total
10	Machining Setup, Install and remove		$ 1.30	unit	1			$ 1.30
20	Machining		$ 0.04	cm^3	4	Material - Steel	3	$ 0.48
							Sub Total	**$ 1.78**

University	Ecole Centrale de Lyon			**Car #**	81	**Part Cost**	$ 12.50
System	Engine and drivetrain	**FileLink1**				**Qty**	1
Assembly	Throttle body	**FileLink2**		**FileLink1**			
Part	Ram pipe	**FileLink3**		**FileLink2**		**Extended Cost**	$ 12.50
P/N Base	06009			**FileLink3**			
Suffix	AA						
Details							

ItemOrder	Material	Use	UnitCost	Size1	Unit1	Size2	Unit2	Area Name	Area	Length	Density	Quantity	Sub Total
10	Aluminium, Normal		$ 4.20	80	mm			Round 80mm	5.02E-03	0.07	2 710.00	1	$ 4.00
												Sub Total	**$ 4.00**

ItemOrder	Process	Use	UnitCost	Unit	Quantity	Multiplier	Mult. Val.	Sub Total
10	Machining Setup, Install and remove		$ 1.30	unit	1			$ 1.30
20	Machining		$ 0.04	cm^3	180	Material - Aluminum	1	$ 7.20
							Sub Total	**$ 8.50**

University	Ecole Centrale de Lyon			**Car #**	81	**Part Cost**	$ 1.94
System	Engine and drivetrain	**FileLink1**				**Qty**	2
Assembly	Throttle body	**FileLink2**		**FileLink1**			
Part	Tab	**FileLink3**		**FileLink2**		**Extended Cost**	$ 3.88
P/N Base	06010			**FileLink3**			
Suffix	AA						
Details							

ItemOrder	Material	Use	UnitCost	Size1	Unit1	Size2	Unit2	Area Name	Area	Length	Density	Quantity	Sub Total
10	Steel, Mild	Tab material	$ 2.25	17	mm	65	mm	Rectangular area 17x65mm	1.11E-03	3.00E-03	7 800.00	1	$ 0.06
												Sub Total	**$ 0.06**

ItemOrder	Process	Use	UnitCost	Unit	Quantity	Multiplier	Mult. Val.	Sub Total
10	Machining Setup, Install and remove		$ 1.30	unit	1			$ 1.30
20	Laser cut		$ 0.01	cm	11	Material - Steel	3	$ 0.33
30	Sheet metal bends		$ 0.25	bend	1			$ 0.25
							Sub Total	**$ 1.88**

University	Ecole Centrale de Lyon			**Car #**	81	**Part Cost**	$ 2.92
System	Engine and drivetrain	**FileLink1**				**Qty**	1
Assembly	Throttle body	**FileLink2**		**FileLink1**			
Part	Trottle body bracket	**FileLink3**		**FileLink2**		**Extended Cost**	$ 2.92
P/N Base	06011			**FileLink3**			
Suffix	AA						
Details							

ItemOrder	Material	Use	UnitCost	Size1	Unit1	Size2	Unit2	Area Name	Area	Length	Density	Quantity	Sub Total
10	Aluminium, Normal	Bracket material	$ 4.20	400	mm	20	mm	Rectangular area 400x20mm	8.00E-03	3.00E-03	2 710.00	1	$ 0.27
												Sub Total	**$ 0.27**

ItemOrder	Process	Use	UnitCost	Unit	Quantity	Multiplier	Mult. Val.	Sub Total
10	Machining Setup, Install and remove		$ 1.30	unit	1			$ 1.30
20	Laser cut		$ 0.01	cm	85	Material - Aluminum	1	$ 0.85
30	Sheet metal bends		$ 0.25	bend	2			$ 0.50
							Sub Total	**$ 2.65**

University	Ecole Centrale de Lyon			**Car #**	81	**Part Cost**	$ 0.51
System	Engine and drivetrain	**FileLink1**				**Qty**	1
Assembly	Throttle body	**FileLink2**		**FileLink1**			
Part	Throttle body upper collar	**FileLink3**		**FileLink2**		**Extended Cost**	$ 0.51
P/N Base	06012			**FileLink3**			
Suffix	AA						
Details							

ItemOrder	Material	Use	UnitCost	Size1	Unit1	Size2	Unit2	Area Name	Area	Length	Density	Quantity	Sub Total
10	Aluminium, Normal	Collar material	$ 4.20	80	mm	20	mm	Rectangular area 80x20mm	1.60E-03	1.50E-03	2 710.00	1	$ 0.03
												Sub Total	**$ 0.03**

ItemOrder	Process	Use	UnitCost	Unit	Quantity	Multiplier	Mult. Val.	Sub Total
10	Sheet metal stamping		$ 0.03	cm^2	16			$ 0.48
							Sub Total	**$ 0.48**

University	Ecole Centrale de Lyon			**Car #**	81	**Part Cost**	$ 1.91
System	Engine and drivetrain	**FileLink1**				**Qty**	1
Assembly	Throttle body	**FileLink2**		**FileLink1**			
Part	Throttle body bottom collar	**FileLink3**		**FileLink2**		**Extended Cost**	$ 1.91
P/N Base	06013			**FileLink3**			
Suffix	AA						
Details							

ItemOrder	Material	Use	UnitCost	Size1	Unit1	Size2	Unit2	Area Name	Area	Length	Density	Quantity	Sub Total
10	Aluminium, Normal	Collar material	$ 4.20	80	mm	20	mm	Rectangular area 80x20mm	1.60E-03	1.50E-03	2 710.00	1	$ 0.03
												Sub Total	**$ 0.03**

ItemOrder	Process	Use	UnitCost	Unit	Quantity	Multiplier	Mult. Val.	Sub Total
10	Sheet metal stamping		$ 0.03	cm^2	16			$ 0.48
20	Machining Setup, Install and remove		$ 1.30	unit	1			$ 1.30
30	Threading, Internal (machining)		$ 0.10	cm	1	Material - Aluminum	1	$ 0.10
							Sub Total	**$ 1.88**

University	Ecole Centrale de Lyon	**Car #**	81	**Asm Cost**	$ 119.18
System	Engine and Drivetrain			**Qty**	1
Assembly	Overflow bottles	**FileLink1**			
P/N Base	A0007	**FileLink2**		**Extended Cost**	$ 119.18
Suffix	AA	**FileLink3**			
Details					

ItemOrder	Part	Part Cost	Quantity	Sub Total
10	Overflow bottles	$ 46.33	2.00	$ 92.67
20	Overflow lines	$ 3.30	2.00	$ 6.60
			Sub Total	**$ 99.27**

ItemOrder	Process	Use	UnitCost	Unit	Quantity	Multiplier	Mult. Val.	Sub Total
10	Weld	Overflow bottles welding	$ 0.15	cm	90		1	$ 13.50
20	Assemble, 1 kg, Interference	Overflow bottles and lines assemble	$ 0.19	unit	4		1	$ 0.76
30	Assemble, 3 kg, Loose	Overflow bottles and Tab assemble	$ 0.19	Unit	1		1	$ 0.53
40	Ratchet <= 6.35 mm		$ 0.50	Unit	4		1	$ 2.00
50	Reaction Tool <= 6.35 mm		$ 0.25	Unit	4		1	$ 1.00
							Sub Total	**$ 17.79**

ItemOrder	Fastener	Use	UnitCost	Size1	Unit1	Size2	Unit2	Quantity	Sub Total
10	Hose Clamp, Miniature Bolt	Lines hose clamp	$ 0.53	8	mm			4	$ 2.12
								Sub Total	**$ 2.12**

ItemOrder	Tooling	Use	UnitCost	Unit	Quantity	PVF	FracIncld	Sub Total
10	Welds - Welding Fixture	Overflow bottles welding	$ 500.00	point	20	3000	1	$ 3.33
							Sub Total	**$ 3.33**

University	Ecole Centrale de Lyon			**Car #**	81	**Part Cost**	$ 46.33
System	Engine and Drivetrain	**FileLink1**				**Qty**	2
Assembly	Overflow bottles	**FileLink2**		**FileLink1**			
Part	Overflow bottle	**FileLink3**		**FileLink2**		**Extended Cost**	$ 92.67
P/N Base	07001			**FileLink3**			
Suffix	AA						
Details	Bought part, cost as made						

ItemOrder	Material	Use	UnitCost	Size1	Unit1	Size2	Unit2	Area Name	Area	Length	Density	Quantity	Sub Total
10	Aluminum, Normal (per kg)	Front and rear Sides	$ 4.20	0.23	kg			Rectangular area 280 x 150 mm	0.0420	0.002	2 710.00	2	$ 1.91
20	Aluminum, Normal (per kg)	Lateral sides	$ 4.20	0.07	kg			Rectangular area 280 x 45 mm	0.013	0.002	2 710.00	2	$ 0.57
30	Aluminum, Normal (per kg)	Top and bottom	$ 4.20	0.04	kg			Rectangular area 150 x 45 mm	0.007	0.002	2 710.00	2	$ 0.31
40	Aluminum, Normal (per kg)	Inputs	$ 4.20	0.001	kg			Round tube diameter 6	1.57E-05	0.02	2 710.00	2	$ 0.01
												Sub Total	**$ 2.80**

ItemOrder	Process	Use	UnitCost	Unit	Quantity	Multiplier	Mult. Val.	Sub Total
10	Machining Setup, Install and remove	Front and rear sides cutting	$ 1.30	Unit	1			$ 1.30
20	Laser Cut	Front and rear sides cutting	$ 0.01	cm	86		3	$ 2.58
30	Machining Setup, Install and remove	Later sides cutting	$ 1.30	Unit	1			$ 1.30
40	Laser Cut	Lateral sides cutting	$ 0.01	cm	65		3	$ 1.95
50	Machining Setup, Install and remove	Top and Bottom cutting	$ 1.30	Unit	1			$ 1.30
60	Laser Cut	Top and Bottom cutting	$ 0.01	cm	39		3	$ 1.17
70	Weld	Overflow bottle welding	$ 0.15	cm	204			$ 30.60
							Sub Total	**$ 40.20**

ItemOrder	Tooling	Use	UnitCost	Unit	Quantity	PVF	FracIncld	Sub Total
10	Welds - Welding Fixture		$ 500.00	point	20	3000	1	$ 3.33
							Sub Total	**$ 3.33**

University	Ecole Centrale de Lyon			**Car #**	81	**Part Cost**	$ 3.30
System	Engine and Drivetrain	**FileLink1**				**Qty**	2
Assembly	Overflow bottles	**FileLink2**		**FileLink1**			
Part	Overflow lines	**FileLink3**		**FileLink2**		**Extended Cost**	$ 6.60
P/N Base	07002			**FileLink3**			
Suffix	AA						
Details							

ItemOrder	Material	Use	UnitCost	Size1	Unit1	Size2	Unit2	Area Name	Area	Length	Density	Quantity	Sub Total
10	Hose, Silicone	Overflow bottles	$ 2.82	6	mm	1	m					1	$ 2.82
												Sub Total	**$ 2.82**

ItemOrder	Process	Use	UnitCost	Unit	Quantity	Multiplier	Mult. Val.	Sub Total
10	Cut (scissors, knife)	Cut hose to correct length	$ 0.06	cm	8			$ 0.48
							Sub Total	**$ 0.48**

University	Ecole Centrale de Lyon	**Car #**	81	**Asm Cost**	$ 166.09
System	Engine and drivetrain			**Qty**	1
Assembly	Cooling system	**FileLink1**			
P/N Base	A0008	**FileLink2**		**Extended Cost**	$ 166.09
Suffix	AA	**FileLink3**			
Details	Engine cooling system				

ItemOrder	Part	Part Cost	Quantity	Sub Total
10	Coolant lines	$ 50.37	1.00	$ 50.37
20	Radiator	$ 28.19	1.00	$ 28.19
30	Fan	$ 34.35	1.00	$ 34.35
40	Expansion tank	$ 22.15	1.00	$ 22.15
60	Radiator upper tab	$ 1.90	1.00	$ 1.90
70	Radiator lower tab	$ 2.00	1.00	$ 2.00
80	Radiator lateral tab	$ 1.74	1.00	$ 1.74
90	Lateral bar	$ 1.48	1.00	$ 1.48
			Sub Total	**$ 142.18**

ItemOrder	Material	Use	UnitCost	Size1	Unit1	Size2	Unit2	Area Name	Area	Length	Density	Quantity	Sub Total
10	Fluid, Coolant	Cooling water	$ -	2.5	Liter							1	$ -
20	Mount, Vibration-Damping Sandwich	Radiator mounts	$ 4.05	15	mm							2	$ 8.10
												Sub Total	**$ 8.10**

ItemOrder	Process	Use	UnitCost	Unit	Quantity	Multiplier	Mult. Val.	Sub Total
10	Weld	Weld upper tab to the frame	$ 0.15	cm	3.9			$ 0.59
20	Weld	Weld lower tab to the frame	$ 0.15	cm	4.7			$ 0.71
30	Weld	Weld lateral tab to the frame	$ 0.15	cm	3			$ 0.45
40	Weld	Weld fan fixation and radiator	$ 0.15	cm	20			$ 3.00
50	Assemble, 1 kg, Loose	Assemble vibration-damping sandwich with tabs	$ 0.06	Unit	2			$ 0.12
60	Assemble, 3 kg, Line-on-line	Set radiators to vibration-damping sandwiches	$ 0.38	Unit	1			$ 0.38
70	Assemble, 1 kg, Loose	Bolt for vibration damping sandwiches	$ 0.06	Unit	4			$ 0.24
80	Ratchet <= 25.4 mm	Bolt for vibration damping sandwiches	$ 0.75	Unit	4			$ 3.00
90	Assemble, 1 kg, Line-on-Line	Assemble lateral bar with lateral tab and radiator	$ 0.13	Unit	2			$ 0.26
100	Assemble, 1 kg, Loose	Bolt for lateral bar	$ 0.06	Unit	2			$ 0.12
110	Ratchet <= 25.4 mm	Bolt for lateral bar	$ 0.75	Unit	2			$ 1.50
120	Reaction Tool <= 25.4 mm	Bolt for lateral bar	$ 0.25	Unit	2			$ 0.50
130	Assemble, 1 kg, Interference	Assemble lines with radiators	$ 0.19	Labor	2			$ 0.38
140	Ratchet <= 6.35 mm	Bolt Hose Clamp	$ 0.50	unit	2			$ 1.00
							Sub Total	**$ 12.24**

ItemOrder	Fastener	Use	UnitCost	Size1	Unit1	Size2	Unit2	Quantity	Sub Total
10	Bolt, Grade 8.8 (SAE 5)	Bolts for lateral tab and radiator	$ 0.08	8	mm	20	mm	1	$ 0.08
20	Nut, Grade 8.8 (SAE 5)	Nuts for radiator tabs	$ 0.04	8	mm			5	$ 0.20
30	Bolt, Grade 8.8 (SAE 5)	Bolt for lateral bar and radiator	$ 0.04	6	mm	15	mm	1	$ 0.04
40	Nut, Grade 8.8 (SAE 5)	Nut for lateral bar and radiator	$ 0.03	6	mm			1	$ 0.03
50	Washer, Grade 8.8 (SAE 5)	Washers for lateral bar	$ 0.01	6	mm			1	$ 0.01
60	Hose Clamp, Miniature Bolt	Main line hose clamp	$ 0.60	25.4	mm			2	$ 1.20
								Sub Total	**$ 1.56**

ItemOrder	Tooling	Use	UnitCost	Unit	Quantity	PVF	FractionIncluded	Sub Total
10	Welds - Welding Fixture	Tabs welding	$ 500.00	Point	12	3000	1	$ 2.00
							Sub Total	**2.00**

University	Ecole Centrale de Lyon			**Car #**	81	**Part Cost**	$ 50.37
System	Engine and drivetrain	**FileLink1**				**Qty**	1
Assembly	Cooling system	**FileLink2**		**FileLink1**			
Part	Coolant lines	**FileLink3**		**FileLink2**		**Extended Cost**	$ 50.37
P/N Base	08001			**FileLink3**			
Suffix	AA						
Details							

ItemOrder	Material	Use	UnitCost	Size1	Unit1	Size2	Unit2	Area Name	Area	Length	Density	Quantity	Sub Total
10	Hose, Silicone	Main Lines	$ 5.64	27.5	mm	0.5	m					4	$ 22.55
20	Hose, Silicone	Overflow bottle lines	$ 1.44	7	mm	0.5	m					2	$ 2.87
30	Fitting/L.P./Tube Sleeve//Aluminum/Anodized		$ 4.50	25	mm							3	$ 13.50
												Sub Total	**$ 38.92**

ItemOrder	Process	Use	UnitCost	Unit	Quantity	Multiplier	Mult. Val.	Sub Total
10	Cut (scissors, knife)	Hose cutting	$ 0.06	cm	25			$ 1.50
20	Assemble, 1 kg, Interference	Hose and tube sleeve assembly	$ 0.19	unit	6			$ 1.14
30	Ratchet <= 6.35 mm	Bolt Hose Clamp	$ 0.50	unit	8			$ 4.00
							Sub Total	**$ 6.64**

ItemOrder	Fastener	Use	UnitCost	Size1	Unit1	Size2	Unit2	Quantity	Sub Total
10	Hose Clamp, Miniature Bolt	Main line hose clamp	$ 0.60	25.4	mm			8	$ 4.81
								Sub Total	**$ 4.81**

University	Ecole Centrale de Lyon			**Car #**	81	**Part Cost**	$ 28.19
System	Engine and drivetrain	**FileLink1**				**Qty**	1
Assembly	Cooling system	**FileLink2**		**FileLink1**			
Part	Radiator	**FileLink3**		**FileLink2**		**Extended Cost**	$ 28.19
P/N Base	08002			**FileLink3**			
Suffix	AA						
Details	Bought part, cost as made						

ItemOrder	Material	Use	UnitCost	Size1	Unit1	Size2	Unit2	Area Name	Area	Length	Density	Quantity	Sub Total
10	Heat Exchanger, Air-to-Liquid	Radiator	$ 0.0035	5625	cm^3			Rectangular area	1 125	5.00	1.00	1	$ 19.69
20	Aluminium, normal (per kg)	Radiator Filler Necks	$ 4.20	0.21	kg			Round 50 mm diameter	1.96E-03	0.04	2 710.00	1	$ 0.89
30	Steel, Mild (per kg)	Radiator cap	$ 2.25	0.44	kg			Round 60 mm diameter	0.003	0.02	7 860.00	1	$ 1.00
												Sub Total	**$ 21.58**

ItemOrder	Process	Use	UnitCost	Unit	Quantity	Multiplier	Mult. Val.	Sub Total
10	Machining Setup, Install and remove	Setup for machinig and removal	$ 1.30	Unit	1			$ 1.30
20	Machining	Radiator Filler Necks	$ 0.04	cm^3	6.04	Material - Aluminum	1	$ 0.24
30	Machining Setup, Install and remove	Setup for machinig and removal	$ 1.30	Unit	1			$ 1.30
40	Machining	Radiator Cap	$ 0.04	cm^3	6.04	Material - Steel	3	$ 0.72
50	Weld	Radiator filler Necks welding	$ 0.15	cm	15.7			$ 2.36
60	Assemble, 1 kg, Interference	Radiator filler Necks and cap assembly	$ 0.19	unit	1			$ 0.19
							Sub Total	**$ 6.11**

ItemOrder	Tooling	Use	UnitCost	Unit	Quantity	PVF	FracIncld	Sub Total
10	Welds - Welding Fixture	Radiator welding fixture	$ 500.00	Point	3	3000	1	$ 0.50
							Sub Total	**$ 0.50**

University	Ecole Centrale de Lyon			**Car #**	81	**Part Cost**	$ 34.35
System	Engine and drivetrain	**FileLink1**				**Qty**	1
Assembly	Cooling system	**FileLink2**		**FileLink1**			
Part	Fan	**FileLink3**		**FileLink2**		**Extended Cost**	$ 34.35
P/N Base	08003			**FileLink3**			
Suffix	AA						
Details							

ItemOrder	Material	Use	UnitCost	Size1	Unit1	Size2	Unit2	Area Name	Area	Length	Density	Quantity	Sub Total
10	Heat Exchanger Fan		$ 30.00									1	$ 30.00
20	Aluminum, Normal (per kg)	Fan fixation	$ 4.20	0.01	kg			Frontal section	0.002	0.002	2 710.00	2	$ 0.09
												Sub Total	**$ 30.09**

ItemOrder	Process	Use	UnitCost	Unit	Quantity	Multiplier	Mult. Val.	Sub Total
10	Machining Setup, Install and remove	Setup for laser cut	$ 1.30	Unit	1			$ 1.30
20	Laser cut	Fan fixation cutting	$ 0.01	cm	60	Aluminium	1	$ 0.60
30	Assemble, 3 kg, Line-on-Line	Set fan to fan fixations	$ 0.38	Unit	1			$ 0.38
40	Ratchet <= 6.35 mm	Bolt Fan to Fixation	$ 0.50	unit	4			$ 2.00
50	Reaction Tool <= 6.35 mm	Nut Fan to fixation	$ 0.25	unit	4			$ 1.00
							Sub Total	**$ 3.98**

ItemOrder	Fastener	Use	UnitCost	Size1	Unit1	Size2	Unit2	Quantity	Sub Total
10	Bolt, Grade 8.8 (SAE 5)	Fan Bolt	$ 0.03	6	mm	10	mm	4	$ 0.12
20	Nut, Grade 8.8 (SAE 5)	Fan Nut	$ 0.03	6	mm			4	$ 0.12
30	Washer, Grade 8.8 (SAE 5)	Fan Washers	0.01	6	mm			4	$ 0.04
								Sub Total	**$ 0.28**

University	Ecole Centrale de Lyon			**Car #**	81	**Part Cost**	$ 22.15
System	Engine and Drivetrain	**FileLink1**				**Qty**	1
Assembly	Cooling system	**FileLink2**		**FileLink1**			
Part	Expansion Tank	**FileLink3**		**FileLink2**		**Extended Cost**	$ 22.15
P/N Base	08004			**FileLink3**			
Suffix	AA						
Details	Bought part, cost as made						

ItemOrder	Material	Use	UnitCost	Size1	Unit1	Size2	Unit2	Area Name	Area	Length	Density	Quantity	Sub Total
10	Aluminium, normal (per kg)	Lateral side	$ 4.20	0.25	kg			Tube 100mm x 2mm	6.16E-04	0.15	2 710.00	1	$ 1.05
20	Aluminium, normal (per kg)	Uper and lower side	$ 4.20	0.043	kg			Round 100 mm diameter	7.85E-03	0.002	2 710.00	2	$ 0.36
30	Aluminium, normal (per kg)	Expansion tank Filler Necks	$ 4.20	0.11	kg			Round 50 mm diameter	1.96E-03	0.02	2 710.00	1	$ 0.45
40	Steel, Mild (per kg)	Expansion tank cap	$ 2.25	0.44	kg			Round 60 mm diameter	0.003	0.02	7 860.00	1	$ 1.00
												Sub Total	**$ 2.86**

ItemOrder	Process	Use	UnitCost	Unit	Quantity	Multiplier	Mult. Val.	Sub Total
10	Machining Setup, Install and remove	Setup for machinig and removal	$ 1.30	Unit	1			$ 1.30
20	Machining	Expansion tank filler necks	$ 0.04	cm^3	6.04	Aluminium	1	$ 0.24
30	Machining Setup, Install and remove	Setup for laser cut	$ 1.30	Unit	1			$ 1.30
40	Laser cut	Uper and lower side cutting	$ 0.01	cm	62.8	Aluminium	1	$ 0.63
50	Weld	Expansion tank welding	$ 0.15	cm	62.8			$ 9.42
60	Weld	Filler necks welding	$ 0.15	cm	15.7			$ 2.36
70	Machining Setup, Install and remove	Setup for machinig and removal	$ 1.30	Unit	1			$ 1.30
80	Machining	Expansion tank Cap	$ 0.04	cm^3	6.04	Material - Steel	3	$ 0.72
90	Assemble, 1 kg, Interference	Expansion tank filler Necks and cap assembly	$ 0.19	Unit	1			$ 0.19
							Sub Total	**$ 17.46**

ItemOrder	Tooling	Use	UnitCost	Unit	Quantity	PVF	FracIncld	Sub Total
10	Welds - Welding Fixture	Expansion tank welding fixture	$ 500.00	Point	11	3000	1	$ 1.83
							Sub Total	**$ 1.83**

University	Ecole Centrale de Lyon			**Car #**	81	**Part Cost**	$ 1.90
System	Engine and drivetrain	**FileLink1**				**Qty**	1
Assembly	Cooling System	**FileLink2**		**FileLink1**			
Part	Radiator upper tab	**FileLink3**		**FileLink2**		**Extended Cost**	$ 1.90
P/N Base	08005			**FileLink3**			
Suffix	AA						
Details							

ItemOrder	Material	Use	UnitCost	Size1	Unit1	Size2	Unit2	Area Name	Area	Length	Density	Quantity	Sub Total
10	Steel, Mild (per kg)	Radiator upper tab	$ 2.25	0.025	kg			Rectangular area 51x31 mm	1.58E-03	0.002	7 860.00	1	$ 0.06
20	Paint	Tab painting	$ 10.00	7.80E-04	m²			Rectangular area 26 x 30 mm	7.80E-04			2.00	$ 0.01
												Sub Total	**$ 0.06**

ItemOrder	Process	Use	UnitCost	Unit	Quantity	Multiplier	Mult. Val.	Sub Total
10	Machining Setup, Install and remove	Setup for laser cut	$ 1.30	Unit	1			$ 1.30
20	Laser Cut	Laser cut	$ 0.01	cm	17.9	Material - Steel	3	$ 0.54
30	Aerosol Apply	Tab painting	$ 5.25	m²	0.00078			$ 0.00
							Sub Total	**$ 1.84**

University	Ecole Centrale de Lyon			**Car #**	81	**Part Cost**	$ 2.00
System	Engine and drivetrain	**FileLink1**				**Qty**	1
Assembly	Cooling System	**FileLink2**		**FileLink1**			
Part	Radiator lower tab	**FileLink3**		**FileLink2**		**Extended Cost**	$ 2.00
P/N Base	08006			**FileLink3**			
Suffix	AA						
Details							

ItemOrder	Material	Use	UnitCost	Size1	Unit1	Size2	Unit2	Area Name	Area	Length	Density	Quantity	Sub Total
10	Steel, Mild (per kg)	Radiator lower tab	$ 2.25	0.041	kg			Rectangular area 53 x 33 mm	1.75E-03	0.003	7 860.00	1	$ 0.09
20	Paint	Tab painting	$ 10.00	0.001	m²			Rectangular area 26 x 30 mm	7.80E-04			2	$ 0.01
												Sub Total	**$ 0.10**

ItemOrder	Process	Use	UnitCost	Unit	Quantity	Multiplier	Mult. Val.	Sub Total
10	Machining Setup, Install and remove	Setup for laser cut	$ 1.30	Unit	1			$ 1.30
20	Laser Cut	Laser cut	$ 0.01	cm	20	Material - Steel	3	$ 0.60
30	Aerosol Apply	Tab painting	$ 5.25	m²	7.80E-04			$ 0.00
							Sub Total	**$ 1.90**

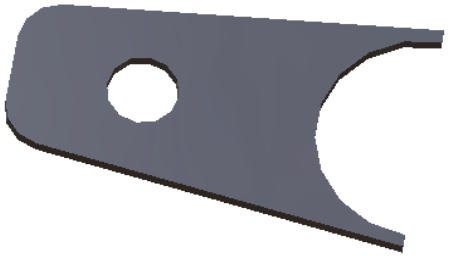

University	Ecole Centrale de Lyon			**Car #**	81	**Part Cost**	$ 1.74
System	Engine and drivetrain	**FileLink1**				**Qty**	1
Assembly	Cooling System	**FileLink2**		**FileLink1**			
Part	Radiator lateral tab	**FileLink3**		**FileLink2**		**Extended Cost**	$ 1.74
P/N Base	08007			**FileLink3**			
Suffix	AA						
Details							

ItemOrder	Material	Use	UnitCost	Size1	Unit1	Size2	Unit2	Area Name	Area	Length	Density	Quantity	Sub Total
10	Steel, Mild (per kg)	Radiator lateral tab	$ 2.25	0.025	kg			Rectangular area 26 x 30 mm	7.80E-04	0.004	7 860.00	1	$ 0.06
20	Paint	Tab painting	$ 10.00	7.80E-04	m²			Rectangular area 26 x 30 mm	7.80E-04			2	$ 0.02
												Sub Total	**$ 0.07**

ItemOrder	Process	Use	UnitCost	Unit	Quantity	Multiplier	Mult. Val.	Sub Total
10	Machining Setup, Install and remove	Setup for laser cut	$ 1.30	Unit	1			$ 1.30
20	Laser Cut	Laser cut of the tab	$ 0.01	cm	12.1	Material - Steel	3	$ 0.36
30	Aerosol Apply	Tab painting	$ 5.25	m²	7.80E-04			$ 0.00
							Sub Total	**$ 1.67**

University	Ecole Centrale de Lyon			**Car #**	81	**Part Cost**	$ 1.48
System	Engine and drivetrain	**FileLink1**				**Qty**	1
Assembly	Cooling System	**FileLink2**		**FileLink1**			
Part	Lateral bar	**FileLink3**		**FileLink2**		**Extended Cost**	$ 1.48
P/N Base	08008			**FileLink3**			
Suffix	AA						
Details	Twisted bar to reinforce radiator mount						

ItemOrder	Material	Use	UnitCost	Size1	Unit1	Size2	Unit2	Area Name	Area	Length	Density	Quantity	Sub Total
10	Aluminum, Normal (per kg)	Lateral bar	$ 4.20	15	mm	3	mm	Rectangular area	4.50E-05	0.45	2 710.00	1.00	$ 0.23
												Sub Total	**$ 0.23**

ItemOrder	Process	Use	UnitCost	Unit	Quantity	Multiplier	Mult. Val.	Sub Total
10	Sheet Metal Saw Cut	Cut of the lateral bar	$ 0.20	cm	1.5			$ 0.30
20	Drilled holes < 25.4 mm dia.	Holes for the lateral bar	$ 0.35	Unit	2			$ 0.70
30	Sheet metal bends	Bar twist	$ 0.25	Bend	1			$ 0.25
							Sub Total	**$ 1.25**

University	Ecole Centrale de Lyon	**Car #**	81	**Asm Cost**	$ 387.09
System	Engine and drivetrain			**Qty**	1
Assembly	Differential	**FileLink1**			
P/N Base	A0009	**FileLink2**		**Extended Cost**	$ 387.09
Suffix	AA	**FileLink3**			
Details	Differential housing and mounting assembly				

ItemOrder	Part	Part Cost	Quantity	Sub Total
10	Housing	$ 125.31	1	$ 125.31
20	Internals	$ 110.00	1	$ 110.00
30	Right bearing carrier	$ 27.04	1	$ 27.04
40	Left bearing carrier	$ 39.51	1	$ 39.51
50	Right bearing carrier tab	$ 1.28	2	$ 2.56
60	Left bearing carrier tab	$ 1.43	2	$ 2.86
			Sub Total	**$ 307.28**

ItemOrder	Material	Use	UnitCost	Size1	Unit1	Size2	Unit2	Area Name	Area	Length	Density	Quantity	Sub Total
10	Bearing, Double Row, Ball, Radial	Right differential bearing	$ 24.94	72	mm	12	mm					1	$ 24.94
20	Bearing, Double Row, Ball, Radial	Left differential bearing	$ 45.83	100	mm	21	mm					1	$ 45.83
30	Fluid, Oil	Differential oil	$ 0.75	0.06	liter							0.06	$ 0.05
												Sub Total	**$ 70.82**

ItemOrder	Process	Use	UnitCost	Unit	Quantity	Multiplier	Mult. Val.	Sub Total
10	Weld	Weld tabs to frame	$ 0.15	cm	15.8			$ 2.37
20	Aerosol Apply	Paint tabs	$ 5.25	m^2	0.005			$ 0.03
30	Assemble, 3 kg, Interference	Assemble the housing and the bearings	$ 0.56	unit	2			$ 1.12
40	Assemble, 1 kg, Interference	Assemble the bearing carriers and the bearings	$ 0.19	unit	2			$ 0.38
50	Assemble, 3 kg, Line-on-Line	Put the bearing carriers and tabs in place	$ 0.38	unit	2			$ 0.76
60	Assemble, 1kg, Loose	Put two washers on bolt	$ 0.06	unit	4			$ 0.24
70	Ratchet <= 6.35 mm	Bolt the left bearing carrier to tabs	$ 0.50	unit	1			$ 0.50
80	Reaction Tool <= 6.35 mm	Bolt the left bearing carrier to tabs	$ 0.25	unit	1			$ 0.25
90	Ratchet <= 25.4 mm	Bolt the right bearing carrier to tabs	$ 0.75	unit	1			$ 0.75
100	Reaction Tool <= 25.4 mm	Bolt the right bearing carrier to tabs	$ 0.25	unit	1			$ 0.25
							Sub Total	**$ 6.65**

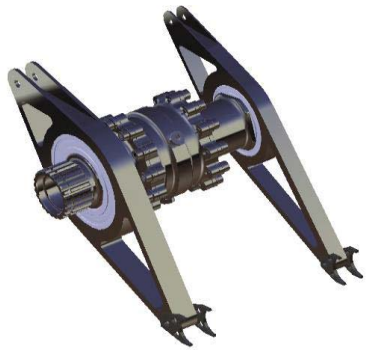

ItemOrder	Fastener	Use	UnitCost	Size1	Unit1	Size2	Unit2	Quantity	Sub Total
10	Bolt, Grade 8.8 (SAE 5)	Assemble left bearing carrier and tabs	$ 0.16	8	mm	40	mm	1	$ 0.16
20	Nut, Grade 8.8 (SAE 5)	Assemble left bearing carrier and tabs	$ 0.04	8	mm			1	$ 0.04
30	Bolt, Grade 8.8 (SAE 5)	Assemble right bearing carrier and tabs	$ 0.08	6	mm	35	mm	1	$ 0.08
40	Nut, Grade 8.8 (SAE 5)	Assemble right bearing carrier and tabs	$ 0.03	6	mm			1	$ 0.03
50	Washer, Grade 8.8 (SAE 5)	Assemble bearing carriers and tabs	$ 0.01		unit			4	$ 0.04
								Sub Total	**$ 0.35**

ItemOrder	Tooling	Use	UnitCost	Unit	Quantity	PVF	FractionIncluded	Sub Total
10	Welds - Welding Fixture	Tabs	$ 500.00	point	3	3000	4	$ 2.00
							Sub Total	**$ 2.00**

University	Ecole Centrale de Lyon			**Car #**	81	**Part Cost**	$ 125.31
System	Engine and drivetrain	**FileLink1**				**Qty**	1
Assembly	Differential	**FileLink2**		**FileLink1**			
Part	Housing	**FileLink3**		**FileLink2**		**Extended Cost**	$ 125.31
P/N Base	09001			**FileLink3**			
Suffix	AA						
Details	Bought with the differential, cost as made						

ItemOrder	Material	Use	UnitCost	Size1	Unit1	Size2	Unit2	Area Name	Area	Length	Density	Quantity	Sub Total
10	Aluminium, Premium	Material for differential housing	$ 4.20					Round 102mm diam.	8.17E-03	0.09	2 710.00	1	$ 8.19
20	Aluminium, Premium	Material for differential housing cover	$ 4.20					Round 102mm diam.	8.17E-03	0.07	2 710.00	1	$ 6.06
30	Aluminium, Premium	Material for differential cover	$ 4.20					Round 102mm diam.	8.17E-03	0.08	2710.00	1	$ 7.23
40	Seal, O-ring, Elastomer		$ 0.05									2	$ 0.10
												Sub Total	**$ 21.6**

ItemOrder	Process	Use	UnitCost	Unit	Quantity	Multiplier	Mult. Val.	Sub Total
10	Machining Setup, Install and remove	Setup and removal of the machining of the differential housing	$ 1.30	unit	1			$ 1.30
20	Machining	Machining of the diffrential housing	$ 0.04	cm^3	623	Material - Aluminium	1	$ 24.94
30	Tapping holes	Tapped holes for the differential housing	$ 0.35	hole	24			$ 8.40
40	Tapping holes	Tapped holes for the drain screw of the differential housing	$ 0.35	hole	3			$ 1.05
50	Machining Setup, Install and remove	Setup and removal of the machining of the differential housing cover	$ 1.30	unit	1			$ 1.30
60	Machining	Machining of the diffrential housing cover	$ 0.04	cm^3	426	Material - Aluminium	1	$ 17.06
70	Drilled holles <25,4mm dia	hole for the differential housing cover	$ 0.35	hole	12			$ 4.20
80	Broach, External	Broach of the housing cover	$ 0.50	cm	3.5			$ 1.75
90	Machining Setup, Install and remove	Setup and removal of the machining	$ 0.35	unit	1			$ 0.35
100	Machining	Machining of the differential cover	$ 0.04	cm^3	538	Material - Aluminium	1	$ 21.53
110	Drilled holles <25,4mm dia	hole for the differential cover	$ 0.35	hole	12			$ 4.20
120	Assemble, 1 kg, Line-on-Line	Assemble the three parts and the two seals	$ 0.13	unit	2			$ 0.26
130	Ratchet <= 6.35 mm	Assemble the three parts	$ 0.50	unit	24			$ 12.00
140	Ratchet <= 25.4 mm	Bolt the drain screws to housing	$ 0.75	unit	3			$ 2.25
							Sub Total	**$ 100.59**

ItemOrder	Fastener	Use	UnitCost	Size1	Unit1	Size2	Unit2	Quantity	Sub Total
10	Bolt, Grade 12,9	Assemble of the three parts	$ 0.06	6	mm	14	mm	24	$ 1.44
20	Washer, Grade 12,9		$ 0.02		unit			24	$ 0.48
30	Bolt, Grade 10,9	Drain screw	$ 0.07	8	mm	8	mm	3	$ 0.21
40	Crush Washer	Copper washer for impermeability of the differential	$ 0.34	8	mm			3	$ 1.01
								Sub Total	**$ 3.14**

University	Ecole Centrale de Lyon			**Car #**	81	**Part Cost**	$ 110.00
System	Engine and drivetrain	**FileLink1**				**Qty**	1
Assembly	Differential	**FileLink2**		**FileLink1**			
Part	Internals	**FileLink3**		**FileLink2**		**Extended Cost**	$ 110.00
P/N Base	09002			**FileLink3**			
Suffix	AA						
Details	Bought with the differential						

ItemOrder	Material	Use	UnitCost	Size1	Unit1	Size2	Unit2	Area Name	Area	Length	Density	Quantity	Sub Total
10	Differential Internals, Limited Slip, Salisbury or Powerflow or Clutch Style	Limite Slip Differential	$ 110.00		unit							1	$ 110.00
												Sub Total	**$ 110.00**

University	Ecole Centrale de Lyon			**Car #**	81	**Part Cost**	$ 27.04
System	Engine and drivetrain	**FileLink1**				**Qty**	1
Assembly	Differential	**FileLink2**		**FileLink1**			
Part	Right bearing carrier	**FileLink3**		**FileLink2**		**Extended Cost**	$ 27.04
P/N Base	09003			**FileLink3**			
Suffix	AA						
Details							

ItemOrder	Material	Use	UnitCost	Size1	Unit1	Size2	Unit2	Area Name	Area	Length	Density	Quantity	Sub Total
10	Aluminium, Premium	Material for the right bearing carrier	$ 4.20	94	mm	17	mm	Rectangular area 94x17mm	1.598E-03	0.29	2 710.00	1	$ 5.33
												Sub Total	**$ 5.33**

ItemOrder	Process	Use	UnitCost	Unit	Quantity	Multiplier	Mult. Val.	Sub Total
10	Machining Setup, Install and remove	Setup and removal of the machining of the right bearing carrier	$ 1.30	unit	1			$ 1.30
20	Machining	Shaping of the differential bearing carrier	$ 0.04	cm^3	429	Material - Aluminium	1	$ 17.16
30	Machining Setup, Change	Setup for the machining of the rod crossing	$ 0.65	unit	1			$ 0.65
40	Machining	Machining of the rod crossing	$ 0.04	cm^3	65	Material - Aluminium	1	$ 2.60
							Sub Total	**$ 21.71**

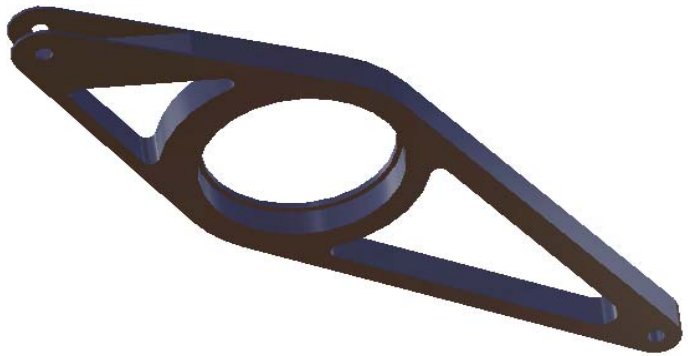

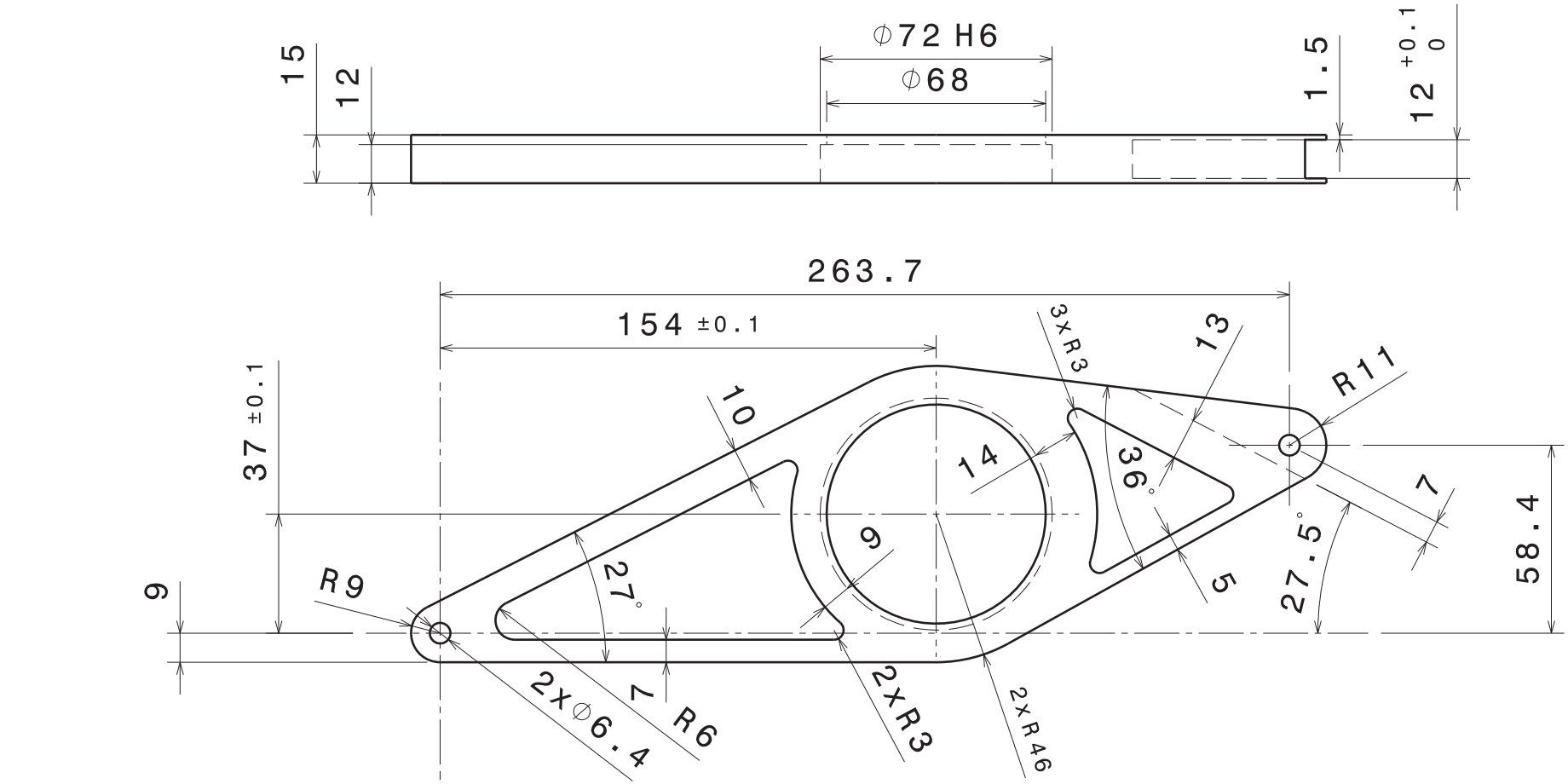

Tolérances générales : ISO 2768-mK

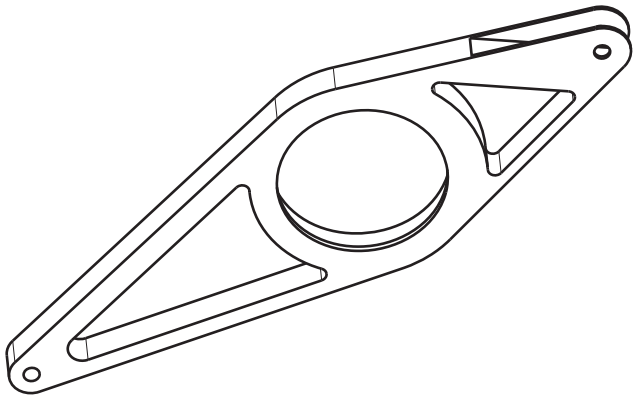

Taille A4		Ecurie Piston Sport Auto
Dessiné par Jordan Rosso	Date 06/12/2013	Désignation Fixation Différentiel Droite
Coordonnées 06 31 62 69 55 jordan.rosso@ecl2015.ec-lyon.fr		Quantité 1 / Matériau Aluminium 2017 / Version v2.0
Date de livraison souhaitée 25/01/2014		Echelle 1:2 / Numéro du plan 14B030 / Feuille 1/1

University	Ecole Centrale de Lyon			**Car #**	81	**Part Cost**	$ 39.51
System	Engine and drivetrain	**FileLink1**				**Qty**	1
Assembly	Differential	**FileLink2**		**FileLink1**			
Part	Left bearing carrier	**FileLink3**		**FileLink2**		**Extended Cost**	$ 39.51
P/N Base	09004			**FileLink3**			
Suffix	AA						
Details							

ItemOrder	Material	Use	UnitCost	Size1	Unit1	Size2	Unit2	Area Name	Area	Length	Density	Quantity	Sub Total
10	Aluminium, Premium	Material for the left bearing carrier	$ 4.20	122	mm	24	mm	Rectangular area 122x24mm	0	0.29	2 710.00	1	$ 9.76
												Sub Total	**$ 9.76**

ItemOrder	Process	Use	UnitCost	Unit	Quantity	Multiplier	Mult. Val.	Sub Total
10	Machining Setup, Install and remove	Setup and removal of the machining of the left bearing carrier	$ 1.30	unit	1			$ 1.30
20	Machining	Shaping of the bearing carrier	$ 0.04	cm^3	694	Material - Aluminium	1	$ 27.77
30	Machining Setup, Change	Setup for the machining of the rod crossing	$ 0.65	unit	1			$ 0.65
40	Machining	Machining of the rod crossing	$ 0.04	cm^3	0.47	Material - Aluminium	1	$ 0.02
							Sub Total	**$ 29.74**

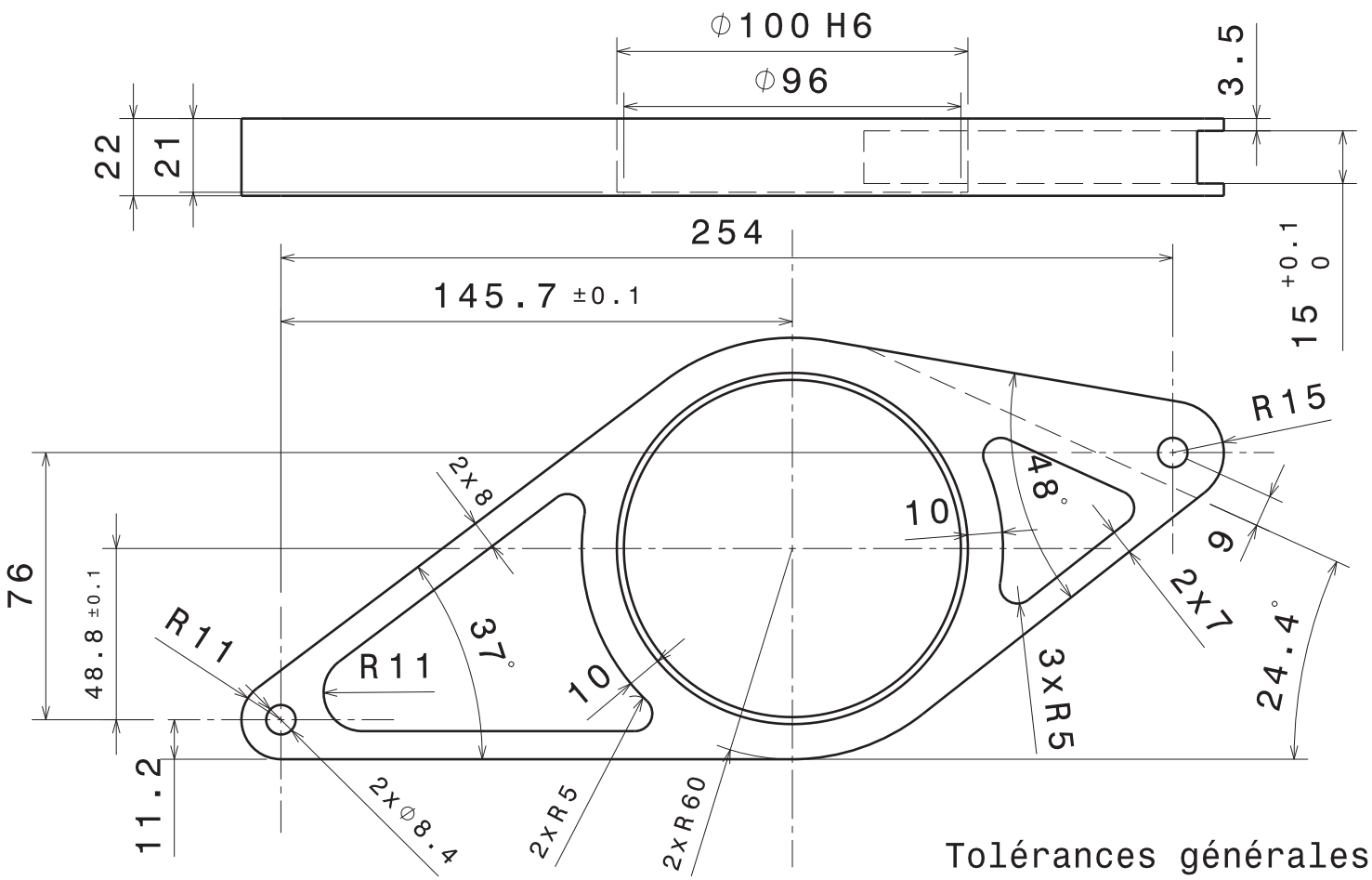

Tolérances générales : ISO 2768-mK

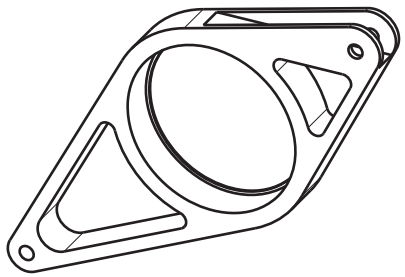

Taille A4		Ecurie Piston Sport Auto
Dessiné par Jordan Rosso	Date 06/12/2013	Désignation Fixation Différentiel Gauche
Coordonnées 06 31 62 69 55 jordan.rosso@ecl2015.ec-lyon.fr		Quantité 1 / Matériau Aluminium 2017 / Version v2.0
Date de livraison souhaitée 25/01/2014		Echelle 1:2 / Numéro du plan 14B031 / Feuille 1/1

University	Ecole Centrale de Lyon			**Car #**	81	**Part Cost**	$ 1.28
System	Engine and drivetrain	**FileLink1**				**Qty**	2
Assembly	Differential	**FileLink2**		**FileLink1**			
Part	Right bearing carrier tab	**FileLink3**		**FileLink2**		**Extended Cost**	$ 2.56
P/N Base	09005			**FileLink3**			
Suffix	AA						
Details							

ItemOrder	Material	Use	UnitCost	Size1	Unit1	Size2	Unit2	Area Name	Area	Length	Density	Quantity	Sub Total
10	Steel, Mild	Material for the tab	$ 2.25	31	mm	5	mm	Rectangular area 31x5mm	0.00016	0.03	7 800.00	1	$ 0.09
												Sub Total	**$ 0.09**

ItemOrder	Process	Use	UnitCost	Unit	Quantity	Multiplier	Mult. Val.	Sub Total
10	Machining Setup, Install and remove	Setup and removal of the machining	$ 1.30	unit	1	2 parts made from a single machine setup	0.5	$ 0.65
20	Laser Cut	Shaping of the tab and holes	$ 0.01	cm	18	Material-Steel	3	$ 0.54
							Sub Total	**$ 1.19**

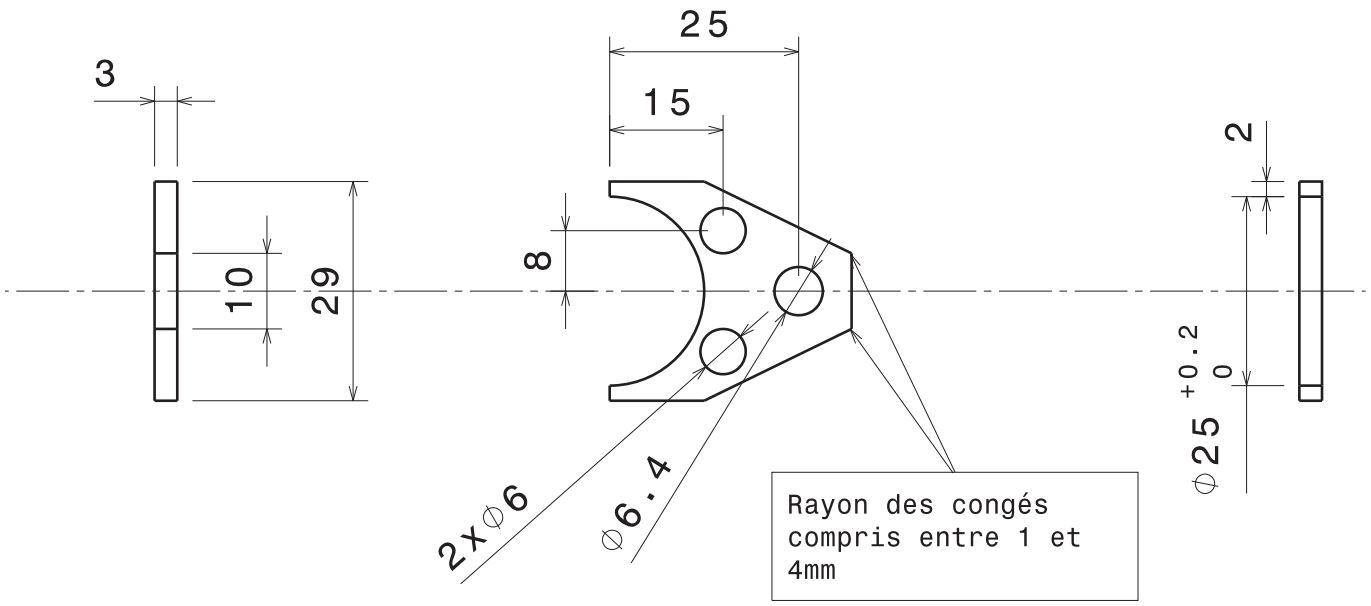

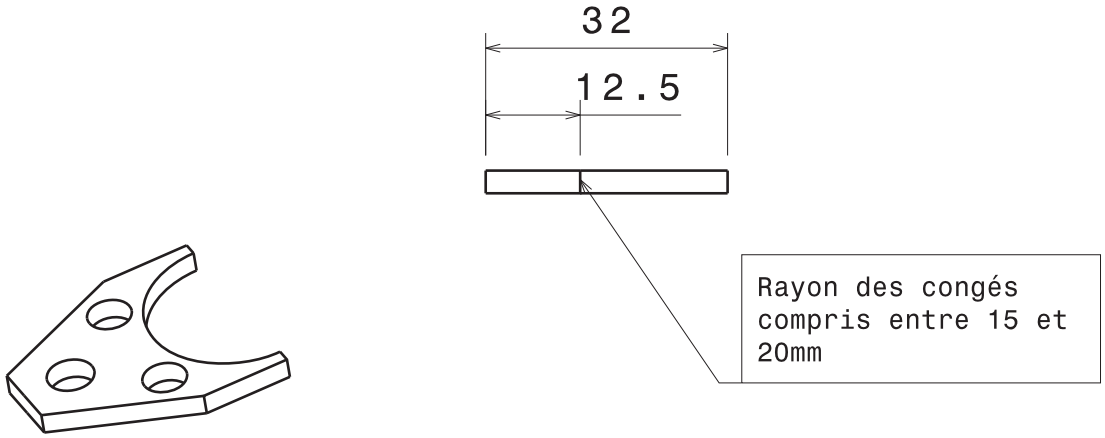

Tolérances générales ISO 2768-mK

Taille A4		Ecurie Piston Sport Auto	
Dessiné par Jordan Rosso	Date 12/11/2013	Désignation Chape Différentiel Inférieure Droite	
Coordonnées 06 31 62 69 55 jordan.rosso@ecl2015.ec-lyon.fr		Quantité 2	Matériau Acier S235	Version v1.0
Vérifié par	Date	Echelle 1:1	Numéro du plan 14 M008	Feuille 1/1

University	Ecole Centrale de Lyon			**Car #**	81	**Part Cost**	$ 1.43
System	Engine and drivetrain	**FileLink1**				**Qty**	2
Assembly	Differential	**FileLink2**		**FileLink1**			
Part	Left bearing carrier tab	**FileLink3**		**FileLink2**		**Extended Cost**	$ 2.86
P/N Base	09006			**FileLink3**			
Suffix	AA						
Details							

ItemOrder	Material	Use	UnitCost	Size1	Unit1	Size2	Unit2	Area Name	Area	Length	Density	Quantity	Sub Total
10	Steel, Mild	Material for the tab	$ 2.25	31	mm	5	mm	Rectangular area 31x5mm	0.00016	0.04	7 800.00	1	$ 0.12
												Sub Total	**$ 0.12**

ItemOrder	Process	Use	UnitCost	Unit	Quantity	Multiplier	Mult. Val.	Sub Total
10	Machining Setup, Install and remove	Setup and removal of the machining	$ 1.30	unit	1	2 parts made from a single machine setup	0.5	$ 0.65
20	Laser Cut	Shaping of the tab and holes	$ 0.01	cm	22	Material-Steel	3	$ 0.66
							Sub Total	**$ 1.31**

University	Ecole Centrale de Lyon	**Car #**	81	**Asm Cost**	$ 512.18
System	Engine and Drivetrain			**Qty**	1
Assembly	Driveshaft	**FileLink1**			
P/N Base	A0010	**FileLink2**		**Extended Cost**	$ 512.18
Suffix	AA	**FileLink3**			
Details					

ItemOrder	Part	Part Cost	Quantity	Sub Total
10	Inboard tripod housing	$ 67.72	2	$ 135.44
20	Outboard tripod housing	$ 59.57	2	$ 119.14
30	Right axle	$ 20.86	1	$ 20.86
40	Left axle	$ 20.70	1	$ 20.70
			Sub Total	**$ 296.14**

ItemOrder	Material	Use	UnitCost	Size1	Unit1	Size2	Unit2	Area Name	Area	Length	Density	Quantity	Sub Total
10	Constant Velocity Joint, Tripod	Tripod for driveshaft	$ 45.00		unit							4.00	$ 180.00
20	Constant Velocity Joint, Boot	Boot for driveshaft	$ 5.00		unit							4.00	$ 20.00
												Sub Total	**$ 200.00**

ItemOrder	Process	Use	UnitCost	Unit	Quantity	Multiplier	Mult. Val.	Sub Total
10	Assemble, 3 kg, Interference	Assemble a tripod housing and the differential	$ 0.56	unit	2			$ 1.12
20	Wrench <= 25.4 mm	Fasten the differential and a tripod housing	$ 1.50	unit	2			$ 3.00
30	Assemble, 1 kg, Interference	Assemble a boot and an axle	$ 0.19	unit	4			$ 0.76
40	Assemble, 1 kg, Interference	Assemble an axle and a snap ring	$ 0.19	unit	4			$ 0.76
50	Assemble, 1 kg, Line-on-Line	Assemble a tripod and an axle	$ 0.13	unit	4			$ 0.52
60	Assemble, 1 kg, Interference	Assemble an axle and a snap ring	$ 0.19	unit	4			$ 0.76
70	Assemble, 3 kg, Loose	Assemble an axle and a tripod housing	$ 0.19	unit	4			$ 0.76
80	Assemble, 1 kg, Interference	Assemble a boot and an tripod housing	$ 0.19	unit	4			$ 0.76
90	Assemble, 3 kg, Interference	Assemble a tripod housing and a hub	$ 0.56	unit	2			$ 1.12
100	Assemble, 3 kg, Interference	Assemble a tripod housing and a hub	$ 0.56	unit	2			$ 1.12
110	Assemble, 3 kg, Interference	Assemble a hose clamp and an axle	$ 0.56	unit	2			$ 1.12
120	Assemble, 3 kg, Interference	Assemble a hose clamp and an tripod housing	$ 0.56	unit	2			$ 1.12
130	Wrench <= 25.4 mm	Bolt tripod housing to hub	$ 1.50	unit	2			$ 3.00
							Sub Total	**$ 12.92**

ItemOrder	Fastener	Use	UnitCost	Size1	Unit1	Size2	Unit2	Quantity	Sub Total
10	Retaining Ring, R-ring	Snap ring for retaining tripods	$ 0.09	20	mm			8	$ 0.72
20	Hose Clamp, Spring Steel	fasten the boot	$ 0.92	65.5	mm			2	$ 1.84
30	Hose Clamp, Spring Steel	fasten the boot	$ 0.28	20	mm			2	$ 0.56
40	Bolt, Grade 8.8 (SAE 5)	Assemble the tripod housings and the differential	$ 0.08	8	mm	20	mm	2	$ 0.16
50	Nut, Grade NAS 6-Point	Fasten the tripod housing and the hub	$ 6.55	20	mm			2	$ 13.10
								Sub Total	**$ 3.12**

University	Ecole Centrale de Lyon			**Car #**	81	**Part Cost**	$ 67.72
System	Engine and drivetrain	**FileLink1**				**Qty**	2
Assembly	Driveshaft	**FileLink2**		**FileLink1**			
Part	Inboard tripod housing	**FileLink3**		**FileLink2**		**Extended Cost**	$ 135.44
P/N Base	10001			**FileLink3**			
Suffix	AA						
Details	Bought						

ItemOrder	Material	Use	UnitCost	Size1	Unit1	Size2	Unit2	Area Name	Area	Length	Density	Quantity	Sub Total
10	Steel, Alloy	Material for the inboard tripod housing	$ 2.25					Round 65,5mm diam.	0.00337	0.16	8 010.00	1.00	$ 9.53
												Sub Total	**$ 9.53**

ItemOrder	Process	Use	UnitCost	Unit	Quantity	Multiplier	Mult. Val.	Sub Total
10	Machining Setup, Install and remove	Setup and removal of the machining of the tripod housing	$ 1.30	unit	1			$ 1.30
20	Machining	Shaping of the tripod housing	$ 0.04	cm^3	453	Material-Steel	3	$ 54.36
30	Machining Setup, Install and remove	Setup and removal of the broach of the tripod housing	$ 1.30	unit	1			$ 1.30
40	Broach, External	Broach of the tripod housing	$ 0.50	cm	2.45			$ 1.23
							Sub Total	**$ 58.19**

University	Ecole Centrale de Lyon			**Car #**	81	**Part Cost**	$ 59.57
System	Engine and drivetrain	**FileLink1**				**Qty**	2
Assembly	Driveshaft	**FileLink2**		**FileLink1**			
Part	Outboard tripod housing	**FileLink3**		**FileLink2**		**Extended Cost**	$ 119.13
P/N Base	10002			**FileLink3**			
Suffix	AA						
Details	Bought						

ItemOrder	Material	Use	UnitCost	Size1	Unit1	Size2	Unit2	Area Name	Area	Length	Density	Quantity	Sub Total
10	Steel, Alloy	Material for the tripod housing	$ 2.25					Round 65,5mm diam.	0.00337	0.13	8 010.00	1.00	$ 8.02
												Sub Total	**$ 8.02**

ItemOrder	Process	Use	UnitCost	Unit	Quantity	Multiplier	Mult. Val.	Sub Total
10	Machining Setup, Install and remove	Setup and removal of the machining of the tripod housing	$ 1.30	unit	1			$ 1.30
20	Machining	Shaping of the tripod housing	$ 0.04	cm^3	378	Material-Steel	3	$ 45.31
30	Machining Setup, Install and remove	Setup and removal of the broach of the tripod housing	$ 1.30	unit	1			$ 1.30
40	Broach, External	Broach of the tripod housing	$ 0.50	cm	4.2			$ 2.10
50	Machining Setup, Install and remove	Setup and removal of the threading of the tripod housing	$ 1.30	unit	1			$ 1.30
60	Threading, External (machining)	Threading of the tripod housing	$ 0.10	cm	2.4			$ 0.24
							Sub Total	**$ 51.55**

University	Ecole Centrale de Lyon			**Car #**	81	**Part Cost**	$ 20.86
System	Engine and drivetrain	**FileLink1**				**Qty**	1
Assembly	Driveshaft	**FileLink2**		**FileLink1**			
Part	Right axle	**FileLink3**		**FileLink2**		**Extended Cost**	$ 20.86
P/N Base	10003			**FileLink3**			
Suffix	AA						
Details	Bought						

ItemOrder	Material	Use	UnitCost	Size1	Unit1	Size2	Unit2	Area Name	Area	Length	Density	Quantity	Sub Total
10	Steel, Alloy	Material for driveshaft axle	$ 2.25					Round 24mm diam.	0.00045	0.41	8 010.00	1.00	$ 3.34
												Sub Total	**$ 3.34**

ItemOrder	Process	Use	UnitCost	Unit	Quantity	Multiplier	Mult. Val.	Sub Total
10	Machining Setup, Install and remove	Setup and removal of the machining of the axle	$ 1.30	unit	1			$ 1.30
20	Machining	Shaping of the axle	$ 0.04	cm^3	80.1	Material-Steel	3	$ 9.62
30	Machining Setup, Install and remove	Setup and removal of the broach of the axle	$ 1.30	unit	1			$ 1.30
40	Broach, External	Broach of the axle	$ 0.50	cm	10.6			$ 5.30
							Sub Total	**$ 17.52**

University	Ecole Centrale de Lyon			**Car #**	81	**Part Cost**	$ 20.70
System	Engine and drivetrain	**FileLink1**				**Qty**	1
Assembly	Driveshaft	**FileLink2**		**FileLink1**			
Part	Left axle	**FileLink3**		**FileLink2**		**Extended Cost**	$ 20.70
P/N Base	10004			**FileLink3**			
Suffix	AA						
Details	Bought						

ItemOrder	Material	Use	UnitCost	Size1	Unit1	Size2	Unit2	Area Name	Area	Length	Density	Quantity	Sub Total
10	Steel, Alloy	Material for driveshaft axle	$ 2.25					Round 24mm diam.	0.00045	0.41	8 010.00	1.00	$ 3.30
												Sub Total	**$ 3.30**

ItemOrder	Process	Use	UnitCost	Unit	Quantity	Multiplier	Mult. Val.	Sub Total
10	Machining Setup, Install and remove	Setup and removal of the machining of the axle	$ 1.30	unit	1			$ 1.30
20	Machining	Shaping of the axle	$ 0.04	cm^3	79.2	Material-Steel	3	$ 9.50
30	Machining Setup, Install and remove	Setup and removal of the broach of the axle	$ 1.30	unit	1			$ 1.30
40	Broach, External	Broach of the axle	$ 0.50	cm	10.6			$ 5.30
							Sub Total	**$ 17.40**

University	Ecole Centrale de Lyon	**Car #**	81	**Asm Cost**	$ 34.80
System	Engine and Drivetrain			**Qty**	1
Assembly	Right tie rod	**FileLink1**			
P/N Base	A0011	**FileLink2**		**Extended Cost**	$ 34.80
Suffix	AA	**FileLink3**			
Details	Alows you to adjust the chain tension				

ItemOrder	Part	Part Cost	Quantity	Sub Total
10	Right threaded rod	$ 5.08	1	$ 5.08
20	Right threaded tube	$ 5.14	2	$ 10.28
30	Right tie rod tab	$ 1.96	2	$ 3.92
			Sub Total	**$ 19.28**

ItemOrder	Material	Use	UnitCost	Size1	Unit1	Size2	Unit2	Area Name	Area	Length	Density	Quantity	Sub Total
10	Rod End, Industrial	Female left threads rod end	$ 1.94	6	mm							1.00	$ 1.94
20	Rod End, Industrial	Female right threads rod end	$ 1.94	6	mm							1.00	$ 1.94
												Sub Total	**$ 3.88**

ItemOrder	Process	Use	UnitCost	Unit	Quantity	Multiplier	Mult. Val.	Sub Total
10	Weld	Weld tabs to frame	$ 0.15	cm	15.8			$ 2.37
20	Aerosol Apply	Paint tabs	$ 5.25	m^2	0.002			$ 0.01
30	Assemble, 1 kg, Line-on-Line	Put four nuts on two threaded rods	$ 0.13	unit	4			$ 0.52
40	Assemble, 1 kg, Line-on-Line	Put two threaded rods in two rod ends	$ 0.13	unit	2			$ 0.26
50	Assemble, 1 kg, Line-on-Line	Put two threaded rods in threaded tube	$ 0.13	unit	2			$ 0.26
60	Wrench <= 25.4 mm	Tighten the nut to the tube and rod ends	$ 1.50	unit	4			$ 6.00
70	Reaction Tool <= 25.4 mm	Tighten the nut to the tube and rod ends	$ 0.25	unit	4			$ 1.00
80	Assemble, 1 kg, Loose	Place bolts and washers	$ 0.06	unit	6			$ 0.36
90	Ratchet <= 6,35 mm	Bolt rod ends to tab and to left bearing carrier	$ 0.50	unit	2			$ 1.00
100	Reaction Tool <= 6,35 mm	Bolt rod ends to tab and to left bearing carrier	$ 0.25	unit	2			$ 0.50
							Sub Total	**$ 9.40**

ItemOrder	Fastener	Use	UnitCost	Size1	Unit1	Size2	Unit2	Quantity	Sub Total
10	Bolt, Grade 8.8 (SAE 5)	Assemble the tie rod with the tab or the bearing carrier	$ 0.07	6	mm	30	mm	2	$ 0.14
20	Nut, Grade 8.8 (SAE 5)	Assemble the tie rod with the tab or the bearing carrier	$ 0.03	6	mm			2	$ 0.06
30	Washer, Grade 8.8 (SAE 5)	Assemble the tie rod with the tab or the bearing carrier	$ 0.01		unit			4	$ 0.04
								Sub Total	**$ 0.24**

ItemOrder	Tooling	Use	UnitCost	Unit	Quantity	PVF	Fraction Included	Sub Total
10	Welds - Welding Fixture	Tabs	$ 500.00	point	3	3000	4	$ 2.00
							Sub Total	**$ 2.00**

University	Ecole Centrale de Lyon			**Car #**	81	**Part Cost**	$ 5.08
System	Engine and drivetrain	**FileLink1**				**Qty**	1
Assembly	Right tie rod	**FileLink2**		**FileLink1**			
Part	Right threaded rod	**FileLink3**		**FileLink2**		**Extended Cost**	$ 5.08
P/N Base	11001			**FileLink3**			
Suffix	AA						
Details							

ItemOrder	Material	Use	UnitCost	Size1	Unit1	Size2	Unit2	Area Name	Area	Length	Density	Quantity	Sub Total
10	Steel, Mild	Material for threaded rod	$ 2.25					Round 20mm diam.	0.00031	0.07	7 800.00	1.00	$ 0.38
												Sub Total	**$ 0.38**

ItemOrder	Process	Use	UnitCost	Unit	Quantity	Multiplier	Mult. Val.	Sub Total
10	Machining Setup, Install and remove	Setup and removal of the machining of the threaded rod	$ 1.30	unit	1			$ 1.30
20	Machining	Shaping of the threaded rod	$ 0.04	cm^3	17.8	Material-Steel	3	$ 2.13
30	Machining Setup, Change	Setup for threading	$ 0.65	unit	1			$ 0.65
40	Threading, External (machining)	M8 threading	$ 0.10	cm	5			$ 0.50
50	Threading, External (machining)	M6 threading	$ 0.10	cm	1.2			$ 0.12
							Sub Total	**$ 4.70**

University	Ecole Centrale de Lyon			**Car #**	81	**Part Cost**	$ 5.14
System	Engine and drivetrain	**FileLink1**				**Qty**	1
Assembly	Right tie rod	**FileLink2**		**FileLink1**			
Part	Right threaded tube	**FileLink3**		**FileLink2**		**Extended Cost**	$ 5.14
P/N Base	11002			**FileLink3**			
Suffix	AA						
Details							

ItemOrder	Material	Use	UnitCost	Size1	Unit1	Size2	Unit2	Area Name	Area	Length	Density	Quantity	Sub Total
10	Steel, Mild	Tube	$ 2.25					Round 10mm x 2mm	0.00003	0.08	7 800.00	1.00	$ 0.04
												Sub Total	**$ 0.04**

ItemOrder	Process	Use	UnitCost	Unit	Quantity	Multiplier	Mult. Val.	Sub Total
10	Tube cut		$ 0.15	cm	5.5			$ 0.83
20	Tube end preperation for welding		$ 0.75	end	2			$ 1.50
30	Weld	Weld bolts to tube	$ 0.15	cm	11.3			$ 1.70
							Sub Total	**$ 4.02**

ItemOrder	Fastener	Use	UnitCost	Size1	Unit1	Size2	Unit2	Quantity	Sub Total
10	Nut, Grade 8.8 (SAE 5)	right threaded	$ 0.04	8	mm			1	$ 0.04
20	Nut, Grade 8.8 (SAE 5)	left threaded	$ 0.04	8	mm			1	$ 0.04
								Sub Total	**$ 0.08**

ItemOrder	Tooling	Use	UnitCost	Unit	Quantity	PVF	FracIncld	Sub Total
10	Welds - Welding Fixture	Tube	$ 500.00	point	3	3000	2	$ 1.00
							Sub Total	**$ 1.00**

University	Ecole Centrale de Lyon			**Car #**	81	**Part Cost**	$ 1.96
System	Engine and drivetrain	**FileLink1**				**Qty**	2
Assembly	Right tie rod	**FileLink2**		**FileLink1**			
Part	Right tie rod tab	**FileLink3**		**FileLink2**		**Extended Cost**	$ 3.91
P/N Base	11003			**FileLink3**			
Suffix	AA						
Details							

ItemOrder	Material	Use	UnitCost	Size1	Unit1	Size2	Unit2	Area Name	Area	Length	Density	Quantity	Sub Total
10	Steel, Mild	Material for the tab	$ 2.25					Rectangular area 31mm x 5mm	0.00016	0.04	7 800.00	1.00	$ 0.10
												Sub Total	**$ 0.10**

ItemOrder	Process	Use	UnitCost	Unit	Quantity	Multiplier	Mult. Val.	Sub Total
10	Machining Setup, Install and remove	Setup and removal of the machining of the tab	$ 1.30	unit	1			$ 1.30
20	Laser Cut	Shaping of the tab and holes	$ 0.01	cm	18.7	Material-Steel	3	$ 0.56
							Sub Total	**$ 1.86**

University	Ecole Centrale de Lyon	**Car #**	81	**Asm Cost**	$ 27.24
System	Engine and Drivetrain			**Qty**	1
Assembly	Left tie rod	**FileLink1**			
P/N Base	A0012	**FileLink2**		**Extended Cost**	$ 27.24
Suffix	AA	**FileLink3**			
Details	Alows you to adjust the chain tension				

ItemOrder	Part	Part Cost	Quantity	Sub Total
10	Left threaded tube	$ 5.14	1	$ 5.14
20	Left tie rod tab	$ 1.99	2	$ 3.98
			Sub Total	**$ 9.12**

ItemOrder	Material	Use	UnitCost	Size1	Unit1	Size2	Unit2	Area Name	Area	Length	Density	Quantity	Sub Total
10	Rod End, Industrial	Female left threads rod end	$ 2.50	8	mm							1.00	$ 2.50
20	Rod End, Industrial	Female right threads rod end	$ 2.50	8	mm							1.00	$ 2.50
												Sub Total	**$ 5.00**

ItemOrder	Process	Use	UnitCost	Unit	Quantity	Multiplier	Mult. Val.	Sub Total
10	Weld	Weld tabs to frame	$ 0.15	cm	15.8			$ 2.37
20	Aerosol Apply	Paint tabs	$ 5.25	m^2	0.002			$ 0.01
30	Assemble, 1 kg, Line-on-Line	Put four nuts on two threaded rods	$ 0.13	unit	4			$ 0.52
40	Assemble, 1 kg, Line-on-Line	Put two threaded rods in two rod ends	$ 0.13	unit	2			$ 0.26
50	Assemble, 1 kg, Line-on-Line	Put two threaded rods in threaded tube	$ 0.13	unit	2			$ 0.26
60	Wrench <= 25.4 mm	Tighten the nut to the tube and rod ends	$ 1.50	unit	4			$ 6.00
70	Reaction Tool <= 25.4 mm	Tighten the nut to the tube and rod ends	$ 0.25	unit	4			$ 1.00
80	Assemble, 1 kg, Loose	Place bolts and washers	$ 0.06	unit	6			$ 0.36
90	Ratchet <= 25.4 mm	Bolt rod ends to tab and to left bearing carrier	$ 0.75	unit	2			$ 1.50
100	Reaction Tool <= 25.4 mm	Bolt rod ends to tab and to left bearing carrier	$ 0.25	unit	2			$ 0.50
							Sub Total	**$ 9.90**

ItemOrder	Fastener	Use	UnitCost	Size1	Unit1	Size2	Unit2	Quantity	Sub Total
10	Stud, Grade 8.8 (SAE 5)	Right threaded rod	$ 0.39	8	mm	80	mm	1	$ 0.39
20	Stud, Grade 8.8 (SAE 5)	Left threaded rod	$ 0.39	8	mm	80	mm	1	$ 0.39
30	Bolt, Grade 8.8 (SAE 5)	Assemble the tie rod with the tab or the bearing carrier	$ 0.12	8	mm	30	mm	2	$ 0.24
40	Nut, Grade 8.8 (SAE 5)	Assemble the tie rod with the tab or the bearing carrier	$ 0.04	8	mm			4	$ 0.16
50	Washer, Grade 8.8 (SAE 5)	Assemble the tie rod with the tab or the bearing carrier	$ 0.01		unit			4	$ 0.04
								Sub Total	**$ 1.22**

ItemOrder	Tooling	Use	UnitCost	Unit	Quantity	PVF	Fraction Included	Sub Total
10	Welds - Welding Fixture	Tabs	$ 500.00	point	3	3000	4	$ 2.00
							Sub Total	**$ 2.00**

University	Ecole Centrale de Lyon			**Car #**	81	**Part Cost**	$ 5.14
System	Engine and drivetrain	**FileLink1**				**Qty**	1
Assembly	Left tie rod	**FileLink2**		**FileLink1**			
Part	Left threaded tube	**FileLink3**		**FileLink2**		**Extended Cost**	$ 5.14
P/N Base	12001			**FileLink3**			
Suffix	AA						
Details							

ItemOrder	Material	Use	UnitCost	Size1	Unit1	Size2	Unit2	Area Name	Area	Length	Density	Quantity	Sub Total
10	Steel, Mild	Tube	$ 2.25					Round 10mm x 2mm	0.00003	0.08	7 800.00	1.00	$ 0.04
												Sub Total	**$ 0.04**

ItemOrder	Process	Use	UnitCost	Unit	Quantity	Multiplier	Mult. Val.	Sub Total
10	Tube cut		$ 0.15	cm	5.5			$ 0.83
20	Tube end preperation for welding		$ 0.75	end	2			$ 1.50
30	Weld	Weld bolts to tube	$ 0.15	cm	11.3			$ 1.70
							Sub Total	**$ 4.02**

ItemOrder	Fastener	Use	UnitCost	Size1	Unit1	Size2	Unit2	Quantity	Sub Total
10	Nut, Grade 8.8 (SAE 5)	right threaded	$ 0.04	8	mm			1	$ 0.04
20	Nut, Grade 8.8 (SAE 5)	left threaded	$ 0.04	8	mm			1	$ 0.04
								Sub Total	**$ 0.08**

ItemOrder	Tooling	Use	UnitCost	Unit	Quantity	PVF	FracIncld	Sub Total
10	Welds - Welding Fixture	Tube	$ 500.00	point	3	3000	2	$ 1.00
							Sub Total	**$ 1.00**

University	Ecole Centrale de Lyon			**Car #**	81	**Part Cost**	$ 1.99
System	Engine and drivetrain	**FileLink1**				**Qty**	2
Assembly	Left tie rod	**FileLink2**		**FileLink1**			
Part	Left tie rod tab	**FileLink3**		**FileLink2**		**Extended Cost**	$ 3.98
P/N Base	12002			**FileLink3**			
Suffix	AA						
Details							

ItemOrder	Material	Use	UnitCost	Size1	Unit1	Size2	Unit2	Area Name	Area	Length	Density	Quantity	Sub Total
10	Steel, Mild	Material for the tab	$ 2.25					Rectangular area 31mm x 5mm	0.00016	0.04	7 800.00	1.00	$ 0.10
												Sub Total	**$ 0.10**

ItemOrder	Process	Use	UnitCost	Unit	Quantity	Multiplier	Mult. Val.	Sub Total
10	Machining Setup, Install and remove	Setup and removal of the machining of the tab	$ 1.30	unit	1			$ 1.30
20	Laser Cut	Shaping of the tab and holes	$ 0.01	cm	19.4	Material-Steel	3	$ 0.58
							Sub Total	**$ 1.88**

University	Ecole Centrale de Lyon	**Car #**	81	**Asm Cost**	$ 188.45
System	Engine and Drivetrain			**Qty**	1
Assembly	Chain set	**FileLink1**			
P/N Base	A0013	**FileLink2**		**Extended Cost**	$ 188.45
Suffix	AA	**FileLink3**			
Details					

ItemOrder	Part	Part Cost	Quantity	Sub Total
10	Front sprocket	$ 14.84	1	$ 14.84
20	Rear sprocket	$ 41.99	1	$ 41.99
30	Rear sprocket adapter	$ 41.72	1	$ 41.72
40	Lower chain shield	$ 3.61	1	$ 3.61
50	Upper chain shield	$ 7.93	1	$ 7.93
			Sub Total	**$ 110.09**

ItemOrder	Material	Use	UnitCost	Size1	Unit1	Size2	Unit2	Area Name	Area	Length	Density	Quantity	Sub Total
10	Chain		$ 0.05	1112	mm							1	$ 55.60
												Sub Total	**$ 55.60**

ItemOrder	Process	Use	UnitCost	Unit	Quantity	Multiplier	Mult. Val.	Sub Total
10	Weld	Weld lower chain shield to frame	$ 0.15	cm	15			$ 2.25
20	Assemble, 3 kg, Interference	Put the rear sprocket adapter on the differential	$ 0.56	unit	1			$ 0.56
30	Assemble, 1 kg, Interference	Put the retaining ring in the groove	$ 0.19	unit	1			$ 0.19
40	Ratchet <= 25.4 mm	Bolt rear sprocket to adapter	$ 0.75	unit	6			$ 4.50
50	Reaction Tool <= 25.4 mm	Bolt rear sprocket to adapter	$ 0.25	unit	6			$ 1.50
60	Assemble, 1 kg, Interference	Put the front sprocket in place	$ 0.19	unit	1			$ 0.19
70	Ratchet <= 25.4 mm	Bolt front sprocket to engine	$ 0.75	unit	1			$ 0.75
80	Assemble, 5 kg, Line-on-Line	Put chain in place	$ 0.63	unit	1			$ 0.63
90	Adjustment - Misc.	Chain tension	$ 5.00	unit	1			$ 5.00
100	Ratchet <= 25.4 mm	Bolt upper chain shield to lower chain shield	$ 0.75	unit	2			$ 1.50
110	Reaction Tool <= 25.4 mm	Bolt upper chain shield to lower chain shield	$ 0.25	unit	2			$ 0.50
120	Ratchet <= 25.4 mm	Bolt upper chain shield to engine	$ 0.75	unit	1			$ 0.75
130	Reaction Tool <= 25.4 mm	Bolt upper chain shield to engine	$ 0.25	unit	1			$ 0.25
							Sub Total	**$ 18.57**

ItemOrder	Fastener	Use	UnitCost	Size1	Unit1	Size2	Unit2	Quantity	Sub Total
10	Bolt, Grade 8.8 (SAE 5)	Assemble the rear sprocket with the adapter	$ 0.34	10	mm	50	mm	6	$ 2.04
20	Nut, Grade 8.8 (SAE 5)	Assemble the rear sprocket with the adapter	$ 0.07	10	mm			6	$ 0.42
30	Washer, Grade 8.8 (SAE 5)	Assemble the rear sprocket with the adapter	$ 0.01		unit			12	$ 0.12
40	Bolt, Grade 8.8 (SAE 5)	Assemble the upper chain shield with the lower	$ 0.08	8	mm	20	mm	2	$ 0.16
50	Nut, Grade 8.8 (SAE 5)	Assemble the upper chain shield with the lower	$ 0.04	8	mm			2	$ 0.08
60	Washer, Grade 8.8 (SAE 5)	Assemble the upper chain shield with the lower	$ 0.01		unit			4	$ 0.04
70	Bolt, Grade 8.8 (SAE 5)	Assemble the upper chain shield with the engine	$ 0.04	6	mm	20	mm	1	$ 0.04
80	Nut, Grade 8.8 (SAE 5)	Assemble the upper chain shield with the engine	$ 0.03	6	mm			1	$ 0.03
90	Washer, Grade 8.8 (SAE 5)	Assemble the upper chain shield with the engine	$ 0.01		unit			2	$ 0.02

100	Bolt, Grade 8.8 (SAE 5)	Assemble the front sprocket with the engine	$ 0.08	8	mm	20	mm	1	$ 0.08
110	Retaining Ring, External	Hold the rear sprocket adapter in place on the differential	$ 0.50	52	mm			1	$ 0.50
								Sub Total	**$ 3.53**

ItemOrder	Tooling	Use	UnitCost	Unit	Quantity	PVF	FractionIncluded	Sub Total
10	Welds - Welding Fixture	Tabs	$ 500.00	point	2	3000	2	$ 0.67
							Sub Total	**$ 0.67**

University	Ecole Centrale de Lyon			**Car #**	81	**Part Cost**	$ 14.84
System	Engine and drivetrain	**FileLink1**				**Qty**	1
Assembly	Chain set	**FileLink2**		**FileLink1**			
Part	Front sprocket	**FileLink3**		**FileLink2**		**Extended Cost**	$ 14.84
P/N Base	13001			**FileLink3**			
Suffix	AA						
Details	Bought part, cost as made						

ItemOrder	Material	Use	UnitCost	Size1	Unit1	Size2	Unit2	Area Name	Area	Length	Density	Quantity	Sub Total
10	Steel, Mild	Material for front sprocket	$ 2.25					Round 95mm	0.00709	0.02	7,800.00	1	$ 2.36
												Sub Total	**$ 2.36**

ItemOrder	Process	Use	UnitCost	Unit	Quantity	Multiplier	Mult. Val.	Sub Total
10	Machining Setup, Install and remove	Setup and removal of the machining of the sprocket	$ 1.30	unit	1			$ 1.30
20	Machining	Shaping of the sprocket	$ 0.04	cm^3	86.0961501	Material-Steel	3	$ 10.33
30	Broach, Internal	Broach of the sprocket	$ 0.50	cm	1.68			$ 0.84
							Sub Total	**$ 12.47**

University	Ecole Centrale de Lyon			**Car #**	81	**Part Cost**	$ 41.81
System	Engine and drivetrain	**FileLink1**				**Qty**	1
Assembly	Chain set	**FileLink2**		**FileLink1**			
Part	Rear sprocket	**FileLink3**		**FileLink2**		**Extended Cost**	$ 41.81
P/N Base	13002			**FileLink3**			
Suffix	AA						
Details	Bought part, cost as made						

ItemOrder	Material	Use	UnitCost	Size1	Unit1	Size2	Unit2	Area Name	Area	Length	Density	Quantity	Sub Total
10	Steel, Mild	Material for the rear sprocket	$ 2.25					Round 230mm	0.04155	0.01	7,800.00	1	$ 6.56
												Sub Total	**$ 6.56**

ItemOrder	Process	Use	UnitCost	Unit	Quantity	Multiplier	Mult. Val.	Sub Total
10	Machining Setup, Install and remove	Setup and removal of the machining of the sprocket	$ 1.30	unit	1			$ 1.30
20	Machining	Shaping of the sprocket	$ 0.04	cm^3	283	Material-Steel	3	$ 33.95
							Sub Total	**$ 35.25**

University	Ecole Centrale de Lyon			**Car #**	81	**Part Cost**	$ 41.72
System	Engine and drivetrain	**FileLink1**				**Qty**	1
Assembly	Chain set	**FileLink2**		**FileLink1**			
Part	Rear sprocket adapter	**FileLink3**		**FileLink2**		**Extended Cost**	$ 41.72
P/N Base	13003			**FileLink3**			
Suffix	AA						
Details							

ItemOrder	Material	Use	UnitCost	Size1	Unit1	Size2	Unit2	Area Name	Area	Length	Density	Quantity	Sub Total
10	Aluminium, Premium	Material for the adapter	$ 4.20					Round 183mm	0.02630	0.03	2,710.00	1	$ 9.88
												Sub Total	**$ 9.88**

ItemOrder	Process	Use	UnitCost	Unit	Quantity	Multiplier	Mult. Val.	Sub Total
10	Machining Setup, Install and remove	Setup and removal of the machining of the adapter	$ 1.30	unit	1			$ 1.30
20	Machining	Shaping of the adapter and holes	$ 0.04	cm^3	701	Material - Aluminium	1	$ 28.04
30	Machining Setup, Change	Setup for machining the other side of the adapter	$ 0.65	unit	1			$ 0.65
40	Machining	Shaping of the other side of the adapter	$ 0.04	cm^3	7.5			$ 0.30
50	Broach, Internal	Broach of the adapter	$ 0.50	cm	3.1			$ 1.55
							Sub Total	**$ 31.84**

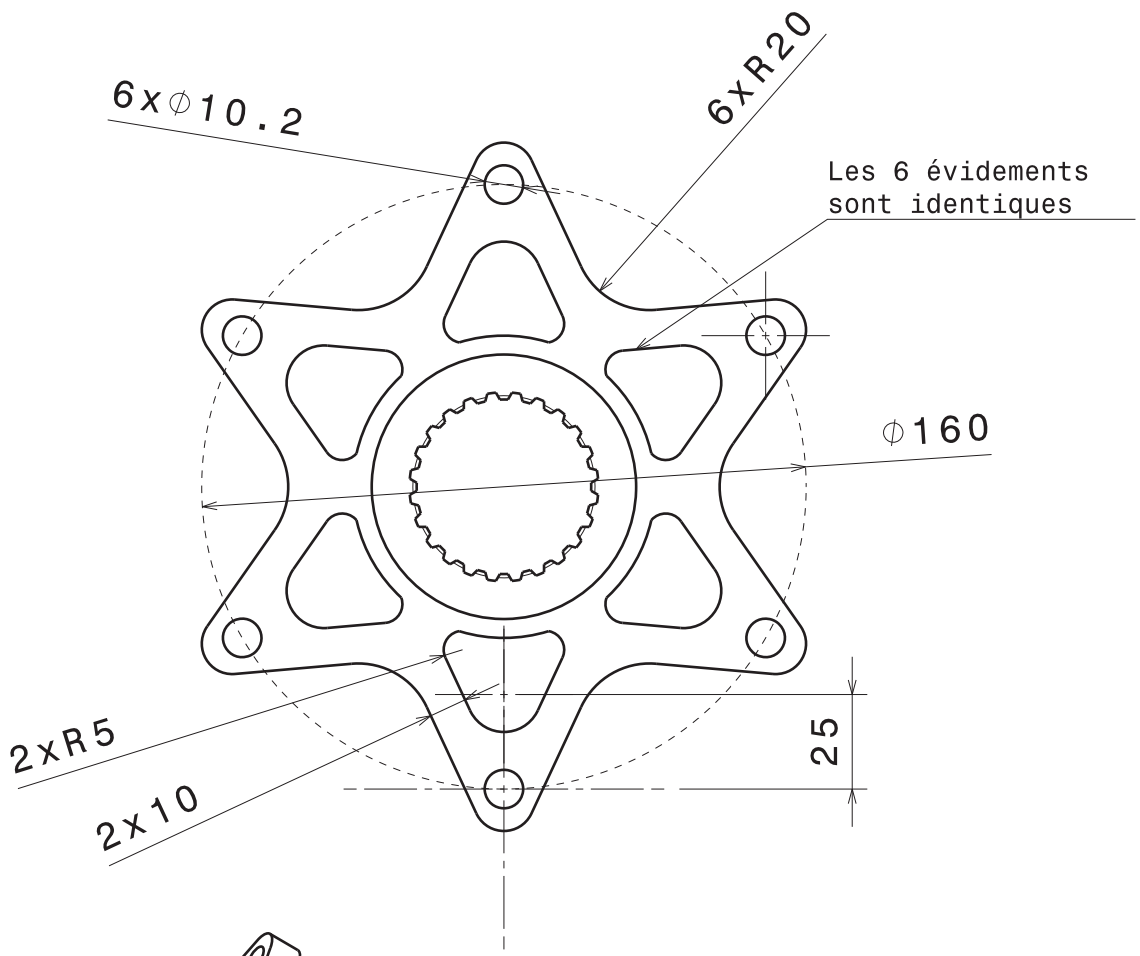

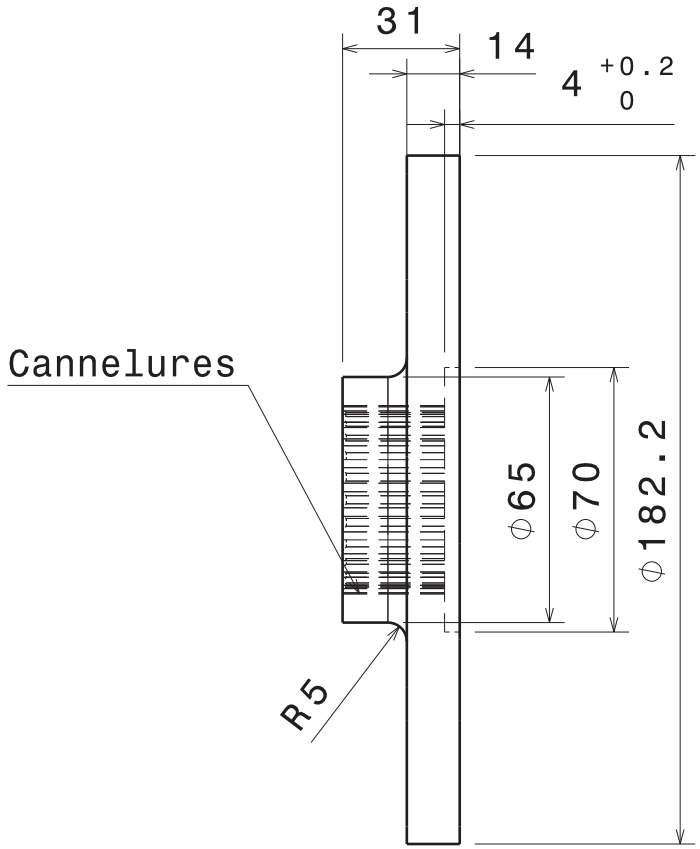

Tolérances générales 2768-mK

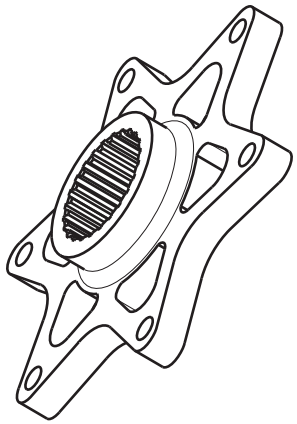

Taille A4		Ecurie Piston Sport Auto
Dessiné par Jordan	Date 06/04/2014	Désignation Porte-couronne
Coordonnées clement.bourquard@ecl2015.ec-lyon.fr 06 33 03 95 75		Quantité 1 / Matériau Aluminium 7075 / Version v3.0
Date de livraison souhaitée		Echelle 1:2 / Numéro du plan 14I001 / Feuille 1/1

University	Ecole Centrale de Lyon			**Car #**	81	**Part Cost**	$ 3.61
System	Engine and drivetrain	**FileLink1**				**Qty**	1
Assembly	Chain set	**FileLink2**		**FileLink1**			
Part	Lower chain shield	**FileLink3**		**FileLink2**		**Extended Cost**	$ 3.61
P/N Base	13004			**FileLink3**			
Suffix	AA						
Details							

ItemOrder	Material	Use	UnitCost	Size1	Unit1	Size2	Unit2	Area Name	Area	Length	Density	Quantity	Sub Total
10	Steel, Mild	Material for the lower chain shield	$ 2.25	77	mm	3	mm	Rectangular area 77mm x 3mm	0.00023	0.19	7,800.00	1	$ 0.75
												Sub Total	**$ 0.75**

ItemOrder	Process	Use	UnitCost	Unit	Quantity	Multiplier	Mult. Val.	Sub Total
10	Machining Setup, Install and remove	Setup for laser cutting	$ 1.30	unit	1			$ 1.30
20	Laser Cut	Shape outline and holes	$ 0.01	cm	52	Material-Steel	3	$ 1.56
							Sub Total	**$ 2.86**

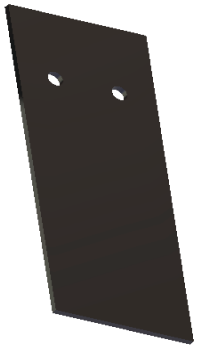

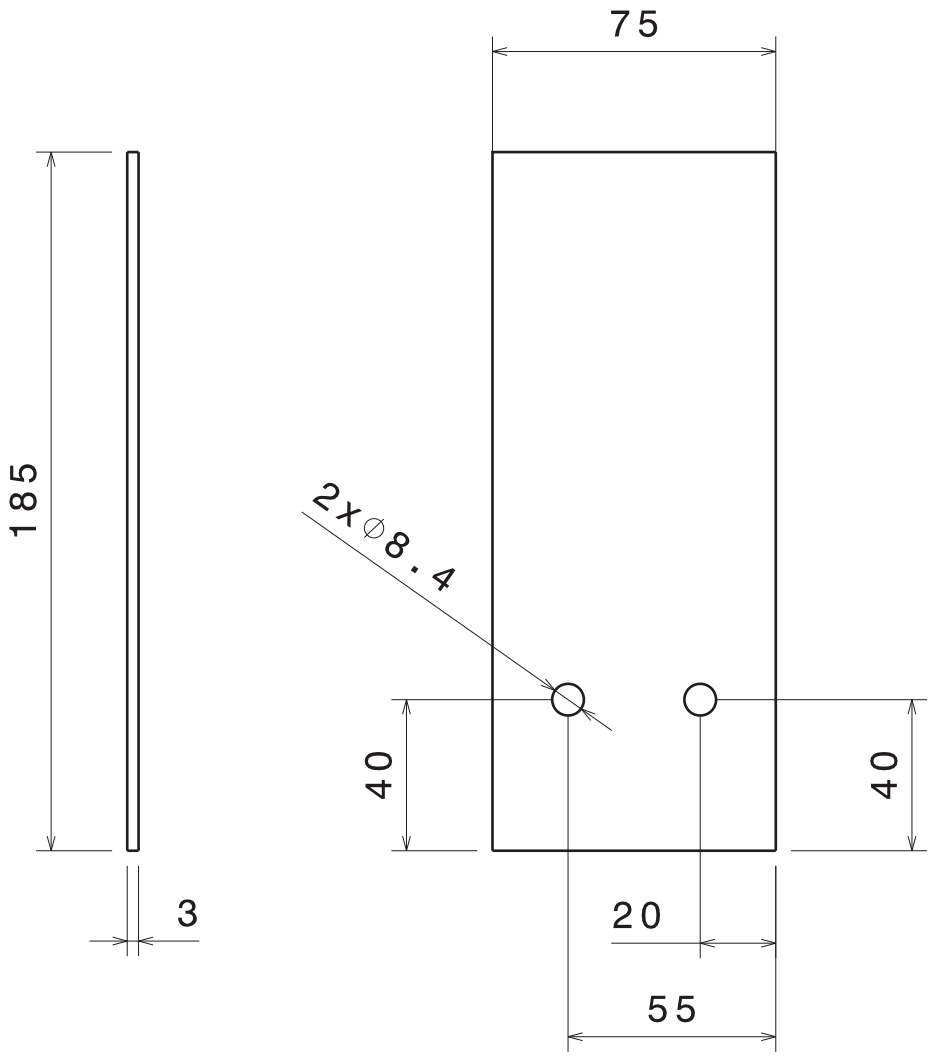

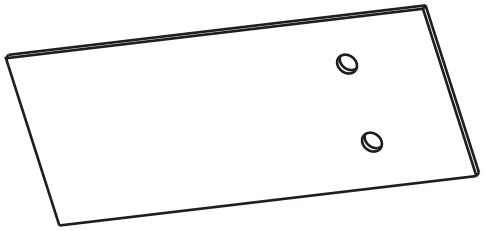

Tolérances générales ISO 2768-mK

Taille A4		Ecurie Piston Sport Auto	
Dessiné par Jordan Rosso	Date 17/11/2013	Désignation Cache-chaîne inférieur	
Coordonnées 06 31 62 69 55 jordan.rosso@ecl2015.ec-lyon.fr		Quantité 1	Matériau Acier S235	Version v1.0
Vérifié par	Date	Echelle 1:2	Numéro du plan 14 M011	Feuille 1/1

University	Ecole Centrale de Lyon			**Car #**	81	**Part Cost**	$ 7.93
System	Engine and drivetrain	**FileLink1**				**Qty**	1
Assembly	Chain set	**FileLink2**		**FileLink1**			
Part	Upper chain shield	**FileLink3**		**FileLink2**		**Extended Cost**	$ 7.93
P/N Base	13005			**FileLink3**			
Suffix	AA						
Details							

ItemOrder	Material	Use	UnitCost	Size1	Unit1	Size2	Unit2	Area Name	Area	Length	Density	Quantity	Sub Total
10	Steel, Mild	Material for the upper chain shield	$ 2.25	77	mm	3	mm	Rectangular area 77mm x 3mm	0.00023	0.52	8,010.00	1.00	$ 2.15
												Sub Total	**$ 2.15**

ItemOrder	Process	Use	UnitCost	Unit	Quantity	Multiplier	Mult. Val.	Sub Total
10	Machining Setup, Install and remove	Setup for laser cutting	$ 1.30	unit	1			$ 1.30
20	Laser Cut	Outline and holes	$ 0.01	cm	132.4	Material-Steel	3	$ 3.97
30	Sheet metal bends	Bend to shape	$ 0.25	bend	2			$ 0.50
							Sub Total	**$ 5.77**

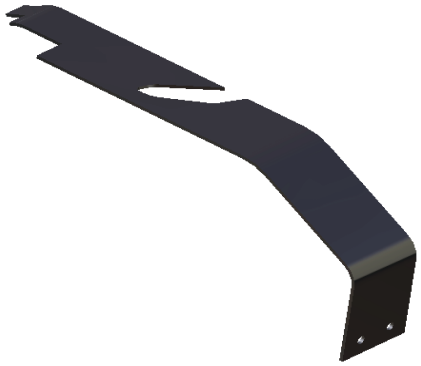

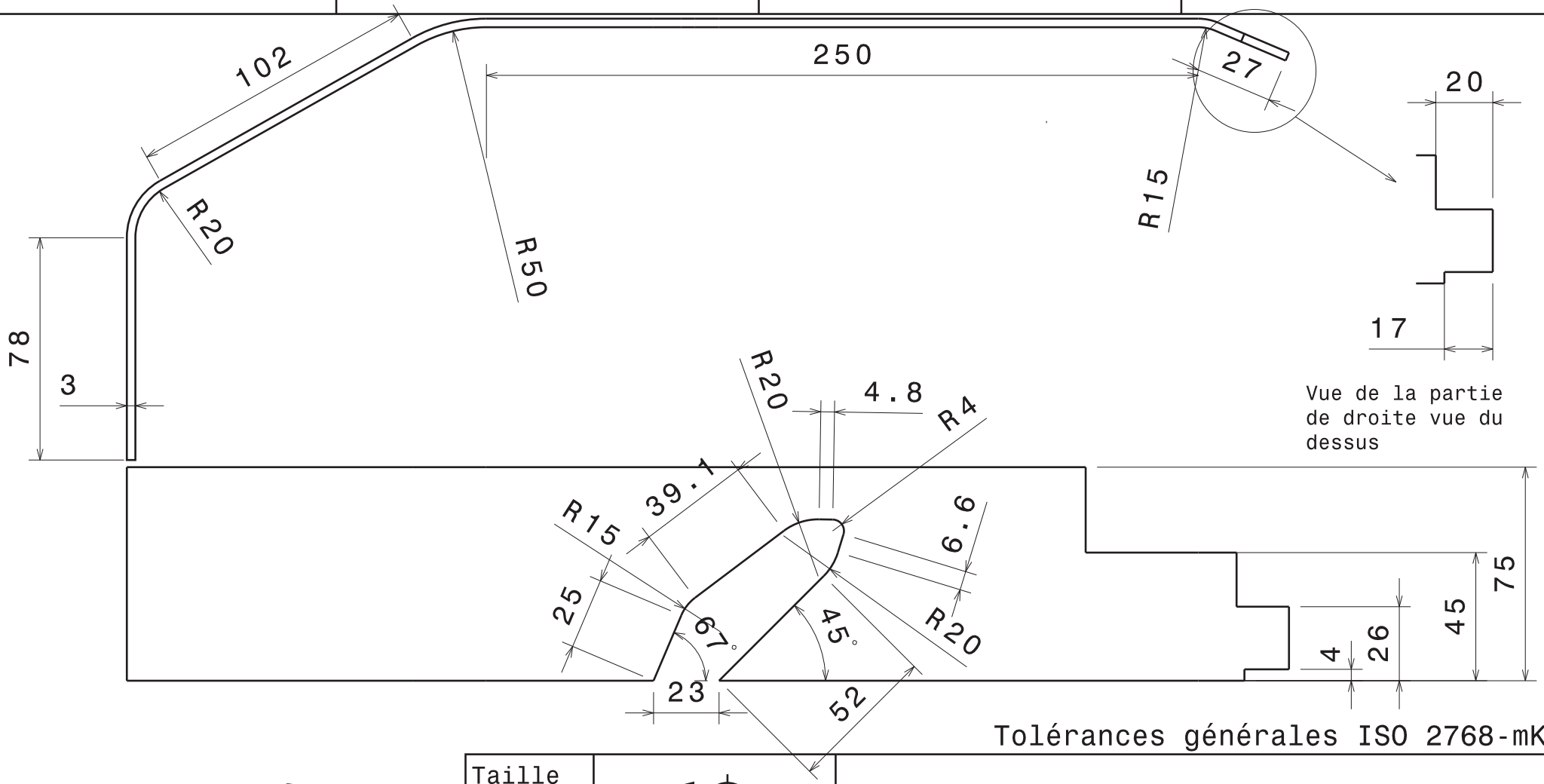

Tolérances générales ISO 2768-mK

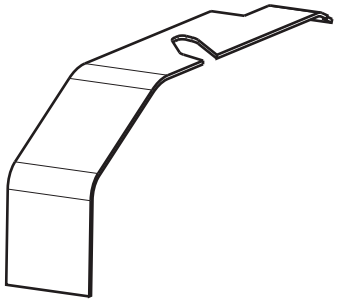

Taille A4		Ecurie Piston Sport Auto
Dessiné par Jordan Rosso	Date 17/11/2013	Désignation Cache-chaîne supérieur
Coordonnées 06 31 62 69 55 jordan.rosso@ecl2015.ec-lyon.fr		Quantité 1 / Matériau Acier S235 / Version v1.0
Vérifié par	Date	Echelle 1:2 / Numéro du plan 14 M010 / Feuille 1/1

FRAME AND BODY

EPSA TEAM CAR # 81

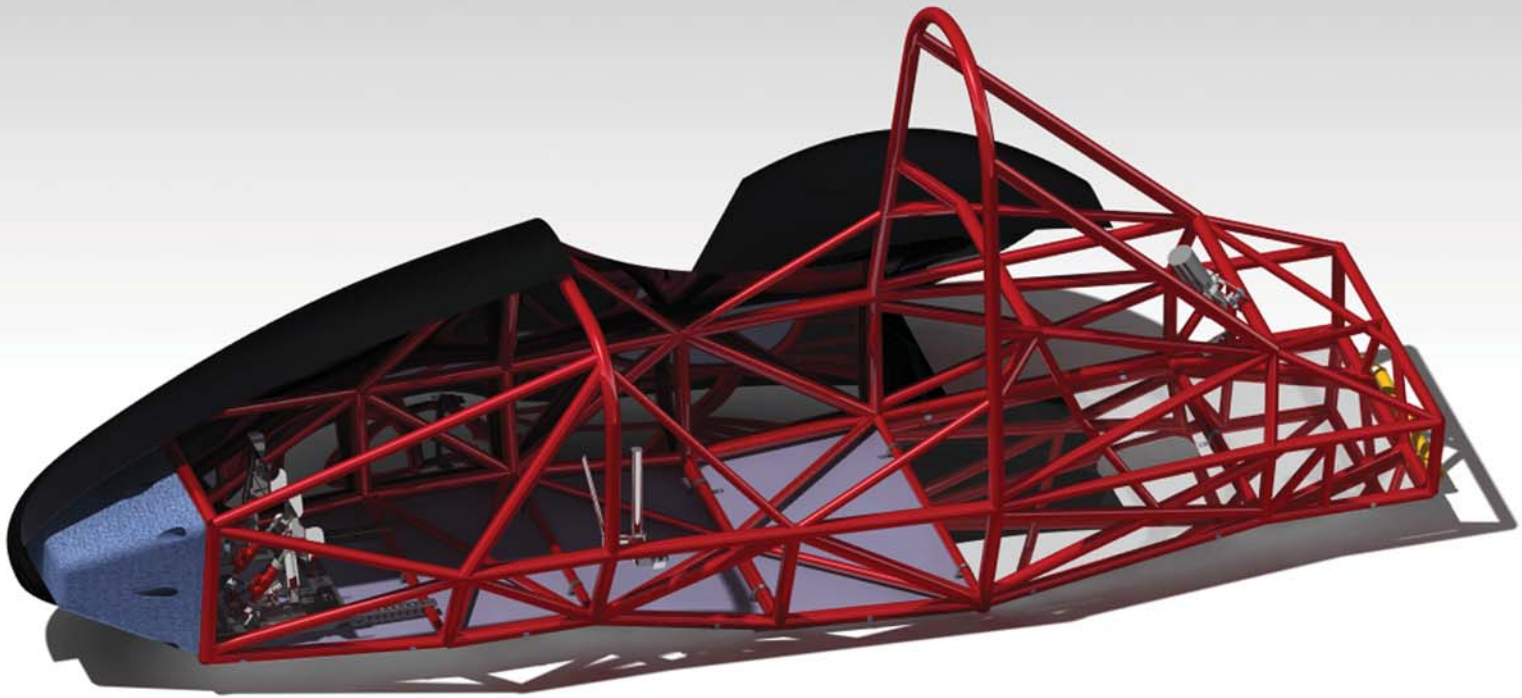

University	Ecole Centrale de Lyon	**Car #**	81	**Asm Cost**	$ 447.34
System	Frame and Body			**Qty**	1
Assembly	Frame	**FileLink1**			
P/N Base	A0001	**FileLink2**		**Extended Cost**	$ 447.34
Suffix	AA	**FileLink3**			
Details	Tubular steel space frame				

ItemOrder	Part	Part Cost	Quantity	Sub Total
10	Bent Round Steel Tubing	$ 18.63	1	$ 18.63
20	Straight Round Steel Tubing	$ 330.39	1	$ 330.39
30	Jacking Point Tab	$ 2.66	2	$ 5.32
			Sub Total	**$ 354.34**

ItemOrder	Material	Use	UnitCost	Size1	Unit1	Size2	Unit2	Area Name	Area	Length	Density	Quantity	Sub Total
10	Paint	Frame's paint	$ 10.00	3.6	m^2							3.6	$ 36.00
												Sub Total	**$ 36.00**

ItemOrder	Process	Use	UnitCost	Unit	Quantity	Multiplier	Mult. Val.	Sub Total
10	Weld - Round Tubing	Frame welding	$ 0.38	cm	562		1	$ 213.56
20	Weld	Jacking Point Tab welding	$ 0.15	cm	15.7		1	$ 2.36
30	Aerosol Apply	Frame painting	$ 5.25	m^2	3.6		1	$ 18.90
							Sub Total	**$ 234.82**

ItemOrder	Tooling	Use	UnitCost	Unit	Quantity	PVF	FractionIncluded	Sub Total
10	Welds - Welding Fixture	Frame Welding Fixture	$ 500.00	point	342	3000	1	$ 57.00
							Sub Total	**$ 57.00**

University	Ecole Centrale de Lyon			**Car #**	81	**Part Cost**	$ 18.63
System	Frame and Body	**FileLink1**				**Qty**	1
Assembly	Frame	**FileLink2**		**FileLink1**			
Part	Bent Round Steel Tubing	**FileLink3**		**FileLink2**		**Extended Cost**	$ 18.63
P/N Base	01001			**FileLink3**			
Suffix	AA						
Details							

ItemOrder	Material	Use	UnitCost	Size1	Unit1	Size2	Unit2	Area Name	Area	Length	Density	Quantity	Sub Total
10	Steel, Alloy	Main & Front Hoop	$ 2.25	5.08	kg			Round 30mm x 2mm	1.76E-04	4	7.80E+03	1	$ 11.43
												Sub Total	**$ 11.43**

ItemOrder	Process	Use	UnitCost	Unit	Quantity	Multiplier	Mult. Val.	Sub Total
10	Tube bends	Main & Front Hoop Bends	$ 0.75	bend	5			$ 3.75
20	Tube cut	Cut to proper length	$ 0.15	cm	3			$ 0.45
30	Tube end preperation for welding		$ 0.75	end	4			$ 3.00
							Sub Total	**$ 7.20**

University	Ecole Centrale de Lyon			**Car #**	81	**Part Cost**	$ 330.39
System	Frame and Body	**FileLink1**				**Qty**	1
Assembly	Frame	**FileLink2**		**FileLink1**			
Part	Straight Round Steel Tubing	**FileLink3**		**FileLink2**		**Extended Cost**	$ 330.39
P/N Base	01002			**FileLink3**			
Suffix	AA						
Details							

ItemOrder	Material	Use	UnitCost	Size1	Unit1	Size2	Unit2	Area Name	Area	Length	Density	Quantity	Sub Total
10	Steel, Alloy	Shoulder Harness Mounting Bar & Straight Part of Front Hoop	$ 2.25	2.01	kg			Round 30mm x 2mm	1.76E-04	1	7 800	1	$ 4.52
20	Steel, Alloy	Side Impact Structure, Front Bulkhead, Roll Hoop Bracing	$ 2.25	12.71	kg			Round 30mm x 1,5mm	1.34E-04	12	7 800	1	$ 28.59
30	Steel, Alloy	Front Bulkhead Support, Main Hoop Bracing Supports, Jacking Point, Miscellaneous	$ 2.25	11.73	kg			Round 25mm x 1,5mm	1.11E-04	14	7 800	1	$ 26.39
40	Steel, Alloy	Miscellaneous	$ 2.25	9.82	kg			Round 20mm x 1,5mm	8.72E-05	14	7 800	1	$ 22.10
												Sub Total	**$ 81.59**

ItemOrder	Process	Use	UnitCost	Unit	Quantity	Multiplier	Mult. Val.	Sub Total
10	Machining Setup, Install and remove	Setup for laser cutting	$ 1.30	Unit	1			$ 1.30
20	Laser Cut	Tube laser cutting	$ 0.01	cm	2700	Material - Steel	3	$ 81.00
30	Tube end preperation for welding		$ 0.75	end	222			$ 166.50
							Sub Total	**$ 248.80**

University	Ecole Centrale de Lyon			**Car #**	81	**Part Cost**	$ 2.66
System	Frame and Body	**FileLink1**				**Qty**	2
Assembly	Frame	**FileLink2**		**FileLink1**			
Part	Jaking Point Tab	**FileLink3**		**FileLink2**		**Extended Cost**	$ 5.32
P/N Base	01003			**FileLink3**			
Suffix	AA						
Details							

ItemOrder	Material	Use	UnitCost	Size1	Unit1	Size2	Unit2	Area Name	Area	Length	Density	Quantity	Sub Total
10	Steel, Alloy	Material for jacking point tab	$ 2.25	0.08	kg			Rectangular area 33mm x 66mm	2.18E-03	5.00E-03	7 800	1	$ 0.19
												Sub Total	**$ 0.19**

ItemOrder	Process	Use	UnitCost	Unit	Quantity	Multiplier	Mult. Val.	Sub Total
10	Machining Setup, Install and remove	Setup for laser cutting	$ 1.30	Unit	1			$ 1.30
20	Laser Cut	Laser cut	$ 0.01	cm	38.9	Material - Steel	3	$ 1.17
							Sub Total	**$ 2.47**

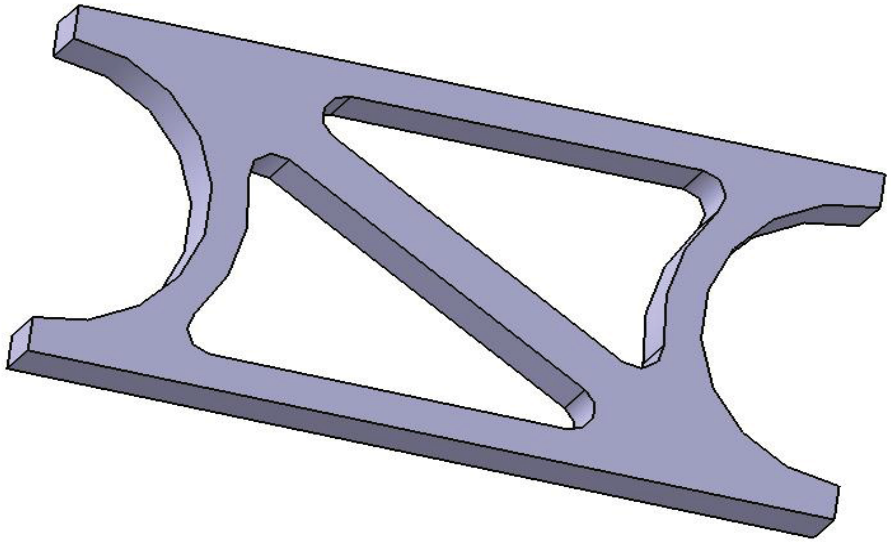

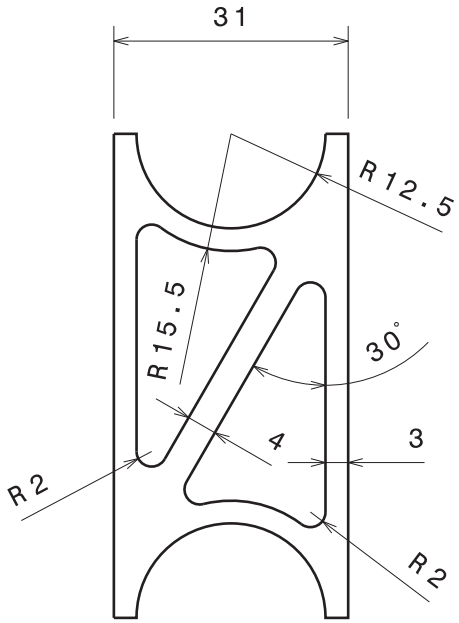

Vue de face
Echelle : 1:1

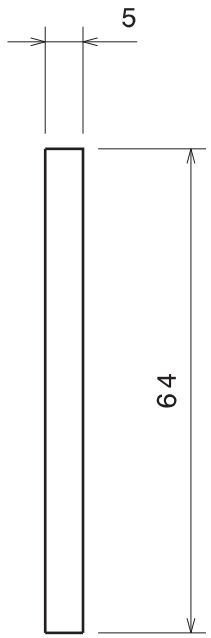

Vue de gauche
Echelle : 1:1

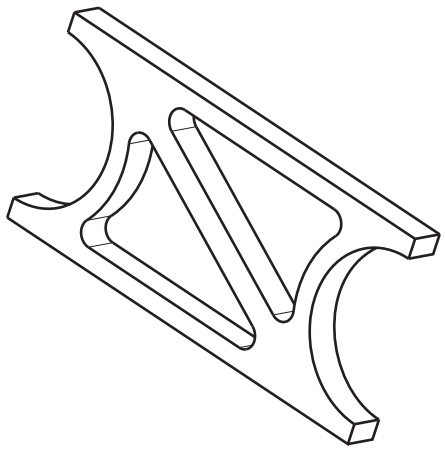

Vue isométrique
Echelle : 1:1

Tolérance générale ISO 2768-mk
Acier laissé libre au fabricant
Casser les angles vifs

Taille A4		Ecurie Piston Sport Auto
Dessiné par Yoann Gimbert	Date 30/12/2013	Désignation Chape Jacking Point
Coordonnées 06.24.20.21.67 yoann.gimbert@ecl2015.ec-lyon.fr		Quantité 2 / Matériau Acier / Version v1.0
Date de livraison souhaitée 22 Janvier 2014		Echelle 1:1 / Numéro du plan 14M083 / Feuille 1/1

University	Ecole Centrale de Lyon	**Car #**	81	**Asm Cost**	$ 63.68
System	Frame and Body			**Qty**	1
Assembly	Impact Attenuator	**FileLink1**			
P/N Base	A0002	**FileLink2**		**Extended Cost**	$ 63.68
Suffix	AA	**FileLink3**			
Details	Impact Attenuator & Anti Intrusion Plate				

ItemOrder	Part	Part Cost	Quantity	Sub Total
10	Attenuator	$ 31.38	1	$ 45.58
20	Anti-Intrusion Plate	$ 7.29	1	$ 7.29
			Sub Total	**$ 52.87**

ItemOrder	Process	Use	UnitCost	Unit	Quantity	Multiplier	Mult. Val.	Sub Total
10	Weld	Weld Anti-Intrusion Plate on chassis	$ 0.15	cm	8		1	$ 1.20
20	Assemble, 1 kg, Loose	Assemble Attenuator on IA Plate	$ 0.06	unit	1		1	$ 0.06
30	Ratchet <= 25.4 mm	Bolt Attenuator on Plate	$ 0.75	unit	6		1	$ 4.50
40	Reaction Tool <= 25.4 mm	Bolt Attenuator on Plate	$ 0.25	unit	6		1	$ 1.50
							Sub Total	**$ 7.26**

ItemOrder	Fastener	Use	UnitCost	Size1	Unit1	Size2	Unit2	Quantity	Sub Total
10	Bolt, Grade 8.8 (SAE 5)	Impact Attenuator	$ 0.31	8	mm	68	mm	6	$ 1.86
20	Nut, Grade 8.8 (SAE 5)	Impact Attenuator	$ 0.04	8	mm			6	$ 0.24
30	Washer, Grade 8.8 (SAE 5)	Impact Attenuator	$ 0.01					12	$ 0.12
								Sub Total	**$ 2.22**

ItemOrder	Tooling	Use	UnitCost	Unit	Quantity	PVF	FractionIncluded	Sub Total
10	Welds - Welding Fixture	Anti-Intrusion Plate	$ 500.00	point	8	3000	1	$ 1.33
							Sub Total	**$ 1.33**

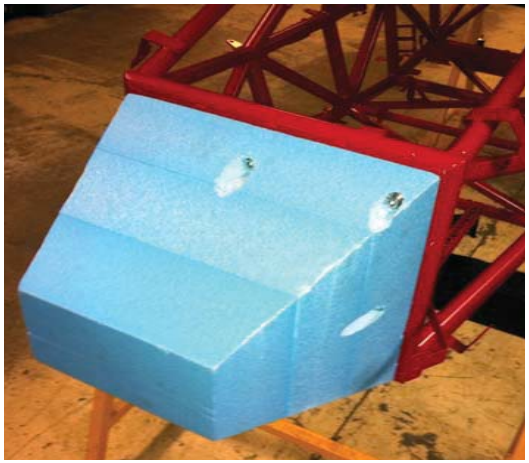

University	Ecole Centrale de Lyon			**Car #**	81	**Part Cost**	$ 45.58
System	Frame and Body	**FileLink1**				**Qty**	1
Assembly	Impact Attenuator	**FileLink2**		**FileLink1**			
Part	Attenuator	**FileLink3**		**FileLink2**		**Extended Cost**	$ 45.58
P/N Base	02001			**FileLink3**			
Suffix	AA						
Details	FSAE Impact Attenuator Type 14, bought, cost as made						

ItemOrder	Material	Use	UnitCost	Size1	Unit1	Size2	Unit2	Area Name	Area	Length	Density	Quantity	Sub Total
10	Foam, Expanding, Non-Structural	First part of foam	$ 15.00	355.00	mm	305	mm	Rectangular area 355mm x 305mm	1.08E-01	8.47E-02	45.00	1	$ 6.19
20	Foam, Expanding, Non-Structural	Second part of foam	$ 15.00	305.00	mm	237	mm	Rectangular area 305mm x 237mm	7.23E-02	8.47E-02	45.00	1	$ 4.13
30	Foam, Expanding, Non-Structural	Third part of foam	$ 15.00	254.00	mm	169	mm	Rectangular area 254mm x 169mm	4.29E-02	8.47E-02	45.00	1	$ 2.45
40	Adhesive	Assemble foam parts, cost included in process	$ -										$ -
												Sub Total	**$ 12.77**

ItemOrder	Process	Use	UnitCost	Unit	Quantity	Multiplier	Mult. Val.	Sub Total
10	Non-metallic cutting > 76.2 mm	Cut first part side	$ 1.40	cut	4	Material - Foam	0.33	$ 1.85
20	Brush Apply	Apply glue on first part	$ 0.02	cm^2	710			$ 14.20
30	Non-metallic cutting > 76.2 mm	Cut second part side	$ 1.40	cut	4	Material - Foam	0.33	$ 1.85
40	Brush Apply	Apply glue on second part	$ 0.02	cm^2	430			$ 8.60
50	Non-metallic cutting > 76.2 mm	Cut third part side	$ 1.40	cut	4	Material - Foam	0.33	$ 1.85
60	Assemble, 1 kg, Line-on-Line	Glue 3 part	$ 0.13	unit	2		1	$ 0.26
70	Drilled holes < 25.4 mm dia.	Drill holes for bolts	$ 0.35	hole	6		1	$ 2.10
80	Drilled holes < 25.4 mm dia.	Drill largest holes at the extremity of the previous holes for bolt's heads	$ 0.35	hole	6		1	$ 2.10
							Sub Total	**$ 32.80**

University	Ecole Centrale de Lyon			**Car #**	81	**Part Cost**	$ 7.29
System	Frame and Body	**FileLink1**				**Qty**	1
Assembly	Impact Attenuator	**FileLink2**		**FileLink1**			
Part	Anti-Intrusion Plate	**FileLink3**		**FileLink2**		**Extended Cost**	$ 7.29
P/N Base	02002			**FileLink3**			
Suffix	AA						
Details	Drilled anti-intusion steel plate						

ItemOrder	Material	Use	UnitCost	Size1	Unit1	Size2	Unit2	Area Name	Area	Length	Density	Quantity	Sub Total
10	Steel, Alloy	Anti-Inrusion Plate	$ 2.25	355.0000	mm	304	mm	Rectangular area 355mm x 304mm	1.08E-01	1.50E-03	7800	1	$ 2.84
20	Paint	Protect from rust	$ 10.00	0.1079	m^2							0.11	$ 1.08
												Sub Total	**$ 3.92**

ItemOrder	Process	Use	UnitCost	Unit	Quantity	Multiplier	Mult. Val.	Sub Total
10	Drilled holes < 25.4 mm dia.	Drill holes holes for bolts	$ 0.35	hole	8			$ 2.80
20	Aerosol Apply	Paint to protect from rust	$ 5.25	m^2	0.1079			$ 0.57
							Sub Total	**$ 3.37**

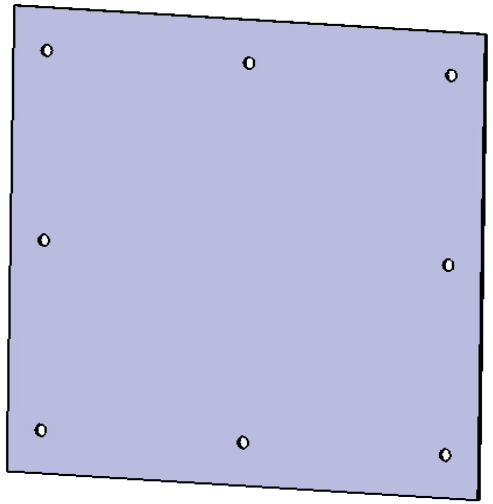

University	Ecole Centrale de Lyon	**Car #**	81	**Asm Cost**	$ 129.40
System	Frame and Body			**Qty**	1
Assembly	Floor Close-out	**FileLink1**			
P/N Base	A0003	**FileLink2**		**Extended C**	$ 129.40
Suffix	AA	**FileLink3**			
Details					

ItemOrder	Part	Part Cost	Quantity	Sub Total
10	Front Floor Pan	$ 14.34	1	$ 14.34
20	Middle Floor Pan	$ 16.43	1	$ 16.43
30	Floor close-out front tab	$ 1.74	1	$ 1.74
40	Floor close-out tab 2_20	$ 2.83	9	$ 25.43
50	Floor close-out tab 1_25	$ 1.93	12	$ 23.16
60	Floor close-out tab 2_30	$ 3.07	2	$ 6.15
70	Floor close-out tab 1_30	$ 1.93	6	$ 11.60
			Sub Total	**$ 98.85**

ItemOrder	Process	Use	UnitCost	Unit	Quantity	Multiplier	Mult. Val.	Sub Total
10	Weld	Tabs welding on frame	$ 0.15	cm	60		1	$ 9.00
20	Assemble, 1 kg, Line-on-Line	Installation front floor pan	$ 0.13	Unit	1	Assemble - Length > 0.5m	1.25	$ 0.16
30	Riveting	Front pan riveting	$ 0.25	Unit	19		1	$ 4.75
40	Assemble, 3 kg, Line-on-Line	Installation middle floor pan	$ 0.38	Unit	1	Assemble - Length > 0.5m	1.25	$ 0.47
30	Riveting	Front pan riveting	$ 0.25	Unit	20		1	$ 5.00
							Sub Total	**$ 19.38**

ItemOrder	Fastener	Use	UnitCost	Size1	Unit1	Size2	Unit2	Quantity	Sub Total
10	Rivet, Pop	Floor close-out riveting	$ 0.03	Unit				39	$ 1.17
								Sub Total	**$ 1.17**

ItemOrder	Tooling	Use	UnitCost	Unit	Quantity	PVF	FractionIncluded	Sub Total
10	Welds-Welding fixture	Tabs welding on frame	$ 500.00	point	60	3000	1	$ 10.00
							Sub Total	**$ 10.00**

University	Ecole Centrale de Lyon			**Car #**	81	**Part Cost**	$ 14.34
System	Frame and body	**FileLink1**				**Qty**	1
Assembly	Floor close-out	**FileLink2**		**FileLink1**			
Part	Front Floor Pan	**FileLink3**		**FileLink2**		**Extended Cost**	$ 14.34
P/N Base	03001			**FileLink3**			
Suffix	AA						
Details							

ItemOrder	Material	Use	UnitCost	Size1	Unit1	Size2	Unit2	Area Name	Area	Length	Density	Quantity	Sub Total
10	Aluminum, Normal (per kg)	Front floor pan	$ 4.20	0.969	kg			Rectangular area 740 x 483 mm	3.57E-01	0.001	2 710.00	1	$ 4.07
												Sub Total	**$ 4.07**

ItemOrder	Process	Use	UnitCost	Unit	Quantity	Multiplier	Mult. Val.	Sub Total
10	Machining Setup, Install and remove	Setup for laser cut	$ 1.30	Unit	1			$ 1.30
20	Laser Cut	Laser cut of the floor pan	$ 0.01	cm	232			$ 2.32
30	Drilled holes < 25.4 mm dia.	Floor pan drilling	$ 0.35	hole	19			$ 6.65
							Sub Total	**$ 10.27**

University	Ecole Centrale de Lyon			**Car #**	81	**Part Cost**	$ 16.43
System	Frame and body	**FileLink1**				**Qty**	1
Assembly	Floor close-out	**FileLink2**		**FileLink1**			
Part	Middle Floor Pan	**FileLink3**		**FileLink2**		**Extended Cost**	$ 16.43
P/N Base	03002			**FileLink3**			
Suffix	AA						
Details							

ItemOrder	Material	Use	UnitCost	Size1	Unit1	Size2	Unit2	Area Name	Area	Length	Density	Quantity	Sub Total
10	Aluminum, Normal (per kg)	Front floor pan	$ 4.20	1.258	kg			Rectangular area 624 x 744 mm	4.64E-01	0.001	2 710.00	1	$ 5.28
												Sub Total	**$ 5.28**

ItemOrder	Process	Use	UnitCost	Unit	Quantity	Multiplier	Mult. Val.	Sub Total
10	Machining Setup, Install and remove	Setup for laser cut	$ 1.30	Unit	1			$ 1.30
20	Laser Cut	Laser cut of the floor pan	$ 0.01	cm	260			$ 2.60
30	Sheet metal bends	Floor pan bending	$ 0.25	bend	1			$ 0.25
40	Drilled holes < 25.4 mm dia.	Floor pan drilling	$ 0.35	hole	20			$ 7.00
							Sub Total	**$ 11.15**

University	Ecole Centrale de Lyon			**Car #**	81	**Part Cost**	$ 1.74
System	Frame and body	**FileLink1**				**Qty**	1
Assembly	Floor close-out	**FileLink2**		**FileLink1**			
Part	Floor close-out front tab	**FileLink3**		**FileLink2**		**Extended Cost**	$ 1.74
P/N Base	03003			**FileLink3**			
Suffix	AA						
Details							

ItemOrder	Material	Use	UnitCost	Size1	Unit1	Size2	Unit2	Area Name	Area	Length	Density	Quantity	Sub Total
10	Steel, Mild (per kg)	Front tab	$ 2.25	0.008	kg			Rectangular area 60 x 12 mm	7.20E-04	1.50E-03	7 860.00	1	$ 0.02
20	Paint	Tab painting	$ 10.00	7.20E-04	m²			Rectangular area 60 x 12 mm	7.20E-04			1	$ 0.01
												Sub Total	**$ 0.03**

ItemOrder	Process	Use	UnitCost	Unit	Quantity	Multiplier	Mult. Val.	Sub Total
10	Machining Setup, Install and remove	Setup for laser cut	$ 1.30	Unit	1			$ 1.30
20	Laser Cut	Laser cut of the front tab	$ 0.01	cm	16	Material - Steel	3	$ 0.16
30	Sheet metal bends	Front tab bending	$ 0.25	bend	1			$ 0.25
40	Aerosol Apply	Tab painting	$ 5.25	m²	7.20E-04			$ 0.00
							Sub Total	**$ 1.71**

University	Ecole Centrale de Lyon			**Car #**	81	**Part Cost**	$ 2.83
System	Frame and body	**FileLink1**				**Qty**	9
Assembly	Floor close-out	**FileLink2**		**FileLink1**			
Part	Floor close-out tab 2_20	**FileLink3**		**FileLink2**		**Extended Cost**	$ 25.43
P/N Base	03004			**FileLink3**			
Suffix	AA						
Details							

ItemOrder	Material	Use	UnitCost	Size1	Unit1	Size2	Unit2	Area Name	Area	Length	Density	Quantity	Sub Total
10	Steel, Mild (per kg)	Tab 2_25	$ 2.25	0.016	kg			Rectangular area 110 x 12 mm	1.32E-03	1.50E-03	7 860.00	1	$ 0.04
20	Paint	Tab painting	$ 10.00	1.32E-03	m²			Rectangular area 110 x 12 mm	1.32E-03			1	$ 0.01
												Sub Total	**$ 0.05**

ItemOrder	Process	Use	UnitCost	Unit	Quantity	Multiplier	Mult. Val.	Sub Total
10	Machining Setup, Install and remove	Setup for laser cut	$ 1.30	Unit	1			$ 1.30
20	Laser Cut	Laser cut of the tab	$ 0.01	cm	24	Material - Steel	3	$ 0.72
30	Sheet metal bends	Tab bending	$ 0.25	bend	3			$ 0.75
40	Aerosol Apply	Tab painting	$ 5.25	m²	1.32E-03			$ 0.01
							Sub Total	**$ 2.78**

University	Ecole Centrale de Lyon			**Car #**	81	**Part Cost**	$ 1.93
System	Frame and body	**FileLink1**				**Qty**	12
Assembly	Floor close-out	**FileLink2**		**FileLink1**			
Part	Floor close-out tab 1_25	**FileLink3**		**FileLink2**		**Extended Cost**	$ 23.16
P/N Base	03005			**FileLink3**			
Suffix	AA						
Details							

ItemOrder	Material	Use	UnitCost	Size1	Unit1	Size2	Unit2	Area Name	Area	Length	Density	Quantity	Sub Total
10	Steel, Mild (per kg)	Tab 2	$ 2.25	0.006	kg			Rectangular area 40 x 12 mm	4.80E-04	1.50E-03	7 860.00	1	$ 0.01
20	Paint	Tab painting	$ 10.00	4.80E-04	m²			Rectangular area 40 x 12 mm	4.80E-04			1	$ 0.00
												Sub Total	**$ 0.02**

ItemOrder	Process	Use	UnitCost	Unit	Quantity	Multiplier	Mult. Val.	Sub Total
10	Machining Setup, Install and remove	Setup for laser cut	$ 1.30	Unit	1			$ 1.30
20	Laser Cut	Laser cut of the tab	$ 0.01	cm	12	Material - Steel	3	$ 0.36
30	Sheet metal bends	Tab bending	$ 0.25	bend	1			$ 0.25
40	Aerosol Apply	Tab painting	$ 5.25	m²	4.80E-04			$ 0.00
							Sub Total	**$ 1.91**

University	Ecole Centrale de Lyon			**Car #**	81	**Part Cost**	$ 3.07
System	Frame and body	**FileLink1**				**Qty**	2
Assembly	Floor close-out	**FileLink2**		**FileLink1**			
Part	Floor close-out tab 2_30	**FileLink3**		**FileLink2**		**Extended Cost**	$ 6.15
P/N Base	03006			**FileLink3**			
Suffix	AA						
Details							

ItemOrder	Material	Use	UnitCost	Size1	Unit1	Size2	Unit2	Area Name	Area	Length	Density	Quantity	Sub Total
10	Steel, Mild (per kg)	Tab 3	$ 2.25	0.018	kg			Rectangular area 125 x 12 mm	1.50E-03	1.50E-03	7 860.00	1	$ 0.04
20	Paint	Tab painting	$ 10.00	1.50E-03	m²			Rectangular area 125 x 12 mm	1.50E-03			1	$ 0.02
												Sub Total	**$ 0.05**

ItemOrder	Process	Use	UnitCost	Unit	Quantity	Multiplier	Mult. Val.	Sub Total
10	Machining Setup, Install and remove	Setup for laser cut	$ 1.30	Unit	1			$ 1.30
20	Laser Cut	Laser cut of the tab	$ 0.01	cm	32	Material - Steel	3	$ 0.96
30	Sheet metal bends	tab bending	$ 0.25	bend	3			$ 0.75
40	Aerosol Apply	Tab painting	$ 5.25	m²	1.50E-03			$ 0.01
							Sub Total	**$ 3.02**

University	Ecole Centrale de Lyon			**Car #**	81	**Part Cost**	$ 1.93
System	Frame and body	**FileLink1**				**Qty**	6
Assembly	Floor close-out	**FileLink2**		**FileLink1**			
Part	Floor close-out tab 1_30	**FileLink3**		**FileLink2**		**Extended Cost**	$ 11.60
P/N Base	03007			**FileLink3**			
Suffix	AA						
Details							

ItemOrder	Material	Use	UnitCost	Size1	Unit1	Size2	Unit2	Area Name	Area	Length	Density	Quantity	Sub Total
10	Steel, Mild (per kg)	Tab 4	$ 2.25	0.007	kg			Rectangular area 48 x 12 mm	5.76E-04	1.50E-03	7 860.00	1	$ 0.02
20	Paint	Tab painting	$ 10.00	5.76E-04	m²			Rectangular area 48 x 12 mm	5.76E-04			1	$ 0.01
												Sub Total	**$ 0.02**

ItemOrder	Process	Use	UnitCost	Unit	Quantity	Multiplier	Mult. Val.	Sub Total
10	Machining Setup, Install and remove	Setup for laser cut	$ 1.30	Unit	1			$ 1.30
20	Laser Cut	Laser cut of the tab	$ 0.01	cm	12	Material - Steel	3	$ 0.36
30	Sheet metal bends	tab bending	$ 0.25	bend	1			$ 0.25
40	Aerosol Apply	Tab painting	$ 5.25	m²	5.76E-04			$ 0.00
							Sub Total	**$ 1.91**

University	Ecole Centrale de Lyon	**Car #**	81	**Asm Cost**	$ 263.19
System	Frame and Body			**Qty**	1
Assembly	Pedal Assembly	**FileLink1**			
P/N Base	A0004	**FileLink2**		**Extended Cost**	$ 263.19
Suffix	AA	**FileLink3**			
Details	Adjustable 2-pedal assembly				

ItemOrder	Part	Part Cost	Quantity	Sub Total
10	Pedal Rail	$ 22.32	2	$ 44.64
20	Pedal Bushing	$ 1.34	4	$ 5.36
30	Pedal Base	$ 44.46	1	$ 44.46
40	Brake Pedal	$ 14.10	1	$ 14.10
50	Brake Pedal Bracket	$ 10.73	1	$ 10.73
60	Brake Pedal Pivot	$ 3.52	1	$ 3.52
70	Brake Pedal Pad	$ 2.86	1	$ 2.86
80	Throttle Pedal	$ 14.75	1	$ 14.75
90	Throttle Pedal Bracket	$ 9.34	1	$ 9.34
100	Throttle Pedal Pivot	$ 3.51	1	$ 3.51
110	Throttle Pedal Pad	$ 2.86	1	$ 2.86
120	Balance bar mount	$ 10.62	1	$ 10.62
130	Custom master-cylinder clevises	$ 3.86	2	$ 7.73
140	Master-cylinder bar	$ 2.99	1	$ 2.99
150	Throttle cable support - left	$ 2.53	1	$ 2.53
160	Throttle cable support - right	$ 2.53	1	$ 2.53
170	Throttle cable support - top	$ 2.11	1	$ 2.11
180	Throttle cable support - bottom	$ 2.21	1	$ 2.21
190	Throttle mechanism rocker	$ 2.80	1	$ 2.80
200	Throttle cable attachment	$ 2.58	1	$ 2.58
210	Overtravel switch mount	$ 2.48	1	$ 2.48
220	Plastic Spacer	$ 0.62	2	$ 1.24
			Sub Total	**$ 195.95**

ItemOrder	Material	Use	UnitCost	Size1	Unit1	Size2	Unit2	Area Name	Area	Length	Density	Quantity	Sub Total
10	Adhesive	Thread-locker for pedal pivot bolts (cost included in process)	$ -										$ -
20	Tape	Anti-skid tape to cover pedal pads (cost included in process)	$ -										$ -
30	Clevis (female)	Female clevis used for throttle rocker mechanism	$ 0.97	6	mm							1	$ 0.97
40	Clevis (male)	Male clevis used for throttle rocker mechanism	$ 0.97	6	mm							1	$ 0.97
50	Switch, Kill	Overtravel switch	$ 3.00									1	$ 3.00
60	Paint	Protect welded steel pedal rails from rust	$ 10.00	0.048	m^2							0.048	$ 0.48
70	Cable Adjuster	Throttle cable	$ 1.00									1	$ 1.00
												Sub Total	**$ 6.42**

ItemOrder	Process	Use	UnitCost	Unit	Quantity	Multiplier	Mult. Val.	Sub Total
10	Weld	Weld 2 pedal rails to frame	$ 0.15	cm	32		1	$ 4.80
20	Aerosol Apply	Paint pedal rails to protect from rust	$ 5.25	m^2	0.048		1	$ 0.25
30	Assemble, 1 kg, Interference	Insert 4 bronze pedal bushings into 2 pedals	$ 0.19	unit	4		1	$ 0.75
40	Assemble, 1 kg, Loose	Put brake pedal bracket in place	$ 0.06	unit	1		1	$ 0.06
50	Ratchet <= 6.35 mm	Bolt brake pedal bracket to pedal base	$ 0.50	unit	4		1	$ 2.00
60	Reaction Tool <= 6.35 mm	Reaction tool for M6 nuts	$ 0.25	unit	4		1	$ 1.00
70	Assemble, 1 kg, Line-on-Line	Align brake pedal and bracket and insert pivot	$ 0.13	unit	1		1	$ 0.13
80	Liquid Apply - Spot	Apply medium-strength threadlocker to bolts	$ 0.10	unit	2		1	$ 0.20

90	Ratchet <= 6.35 mm	Tighten M5 bolts into pedal pivot	$ 0.50	unit	2		1	$ 1.00
100	Assemble, 1 kg, Loose	Place brake pedal pad in position on pedal	$ 0.06	unit	1		1	$ 0.06
110	Ratchet <= 6.35 mm	Bolt brake pedal pad to brake pedal	$ 0.50	unit	3		1	$ 1.50
120	Reaction Tool <= 6.35 mm	Reaction tool for M4 nut	$ 0.25	unit	1		1	$ 0.25
130	Assemble, 1 kg, Loose	Put overtravel switch mount in position	$ 0.06	unit	1		1	$ 0.06
140	Ratchet <= 6.35 mm	Bolt overtravel switch mount onto pedal bracket	$ 0.50	unit	4		1	$ 2.00
150	Reaction Tool <= 6.35 mm	Bolt overtravel switch mount onto pedal bracket	$ 0.25	unit	4		1	$ 1.00
160	Assemble, 1 kg, Loose	Put overtravel switch in position	$ 0.06	unit	1		1	$ 0.06
170	Hand, Loose <= 25.4 mm	Screw on plastic nut	$ 0.50	unit	1		1	$ 0.50
180	Wrench <= 25.4 mm	Tighten to lock overtravel switch in position	$ 1.50	unit	1		1	$ 1.50
190	Assemble, 1 kg, Loose	Put throttle pedal bracket in place	$ 0.06	unit	1		1	$ 0.06
200	Ratchet <= 6.35 mm	Bolt throttle pedal bracket to pedal base	$ 0.50	unit	2		1	$ 1.00
210	Reaction Tool <= 6.35 mm	Reaction tool for M6 nuts	$ 0.25	unit	2		1	$ 0.50
220	Assemble, 1 kg, Line-on-Line	Align throttle pedal and bracket and insert pivot	$ 0.13	unit	1		1	$ 0.13
230	Liquid Apply - Spot	Apply medium-strength threadlocker to bolts	$ 0.10	unit	2		1	$ 0.20
240	Ratchet <= 6.35 mm	Tighten M5 bolts into pedal pivot	$ 0.50	unit	2		1	$ 1.00
250	Assemble, 1 kg, Loose	Place throttle pedal pad in position on pedal	$ 0.06	unit	1		1	$ 0.06
260	Ratchet <= 6.35 mm	Bolt brake pedal pad to throttle pedal	$ 0.50	unit	3		1	$ 1.50
270	Reaction Tool <= 6.35 mm	Reaction tool for M4 nut	$ 0.25	unit	3		1	$ 0.75
280	Cut (scissors, knife)	Cut 2 pieces of anti-skid tape	$ 0.06	unit	2		1	$ 0.12
290	Tape	Cover both pedal pads with anti-skid tape	$ 0.80	m	0.25		1	$ 0.20
300	Assemble, 1 kg, Loose	Put balance bar mount in place	$ 0.06	unit	1		1	$ 0.06
310	Ratchet <= 6.35 mm	Bolt balance bar mount onto pedal base	$ 0.50	unit	4		1	$ 2.00
320	Hand, Loose <= 25.4 mm	Remove clevises from balance bar	$ 0.50	unit	2	Disassemble	0.8	$ 0.80
330	Assemble, 1 kg, Line-on-Line	Insert balance bar into balance bar mount	$ 0.13	unit	1		1	$ 0.13
340	Assemble, 1 kg, Loose	Assemble plastic spacers	$ 0.06	unit	2		1	$ 0.12
350	Assemble, 1 kg, Line-on-Line	Insert custom m.c. clevises on balance bar	$ 0.13	unit	2		1	$ 0.25
360	Hand, Loose <= 25.4 mm	Insert custom m.c. clevises on balance bar	$ 0.50	unit	2		1	$ 1.00
370	Assemble, 1 kg, Loose	Insert 2 studs into clevises each with 2 jam nuts	$ 0.06	unit	6		1	$ 0.36
380	Hand, Loose <= 6.35 mm	Insert 2 studs into clevises each with 2 jam nuts	$ 0.25	unit	6		1	$ 1.50
390	Assemble, 1 kg, Loose	Assemble master cylinder onto stud end	$ 0.06	unit	2		1	$ 0.12
400	Hand, Loose <= 25.4 mm	Assemble master cylinder onto stud end	$ 0.50	unit	2		1	$ 1.00
410	Wrench <= 6.35 mm	Tighten master cylinder and clevis jam nuts	$ 1.00	unit	4		1	$ 4.00
420	Assemble, 1 kg, Line-on-Line	Insert Master-cylinder bar into brake pedal	$ 0.13	unit	1		1	$ 0.13
430	Assemble, 1 kg, Interference	Assemble retaining rings on master-cylinder bar	$ 0.19	unit	2		1	$ 0.38
440	Assemble, 1 kg, Line-on-Line	Assemble master -cylinder ends onto bar	$ 0.13	unit	2		1	$ 0.25
450	Ratchet <= 6.35 mm	Tighten M6 nuts on ends of master-cyl. Bar	$ 0.50	unit	2		1	$ 1.00
460	Reaction Tool <= 6.35 mm	Tighten M6 nuts on ends of master-cyl. Bar	$ 0.25	unit	1		1	$ 0.25
470	Adjustment - Misc.	Adjust brake bias on balance bar	$ 5.00	unit	1		1	$ 5.00
480	Assemble, 1 kg, Loose	Assemble the 4 "throttle cable support" parts	$ 0.06	unit	4		1	$ 0.24
490	Riveting	Assemble the 4 "throttle cable support" parts	$ 0.25	unit	8		1	$ 2.00
500	Assemble, 1 kg, Loose	Place throttle cable support ass. on pedal base	$ 0.06	unit	2		1	$ 0.12
510	Ratchet <= 6.35 mm	Bolt throttle cable support ass. to pedal base	$ 0.50	unit	2		1	$ 1.00
520	Reaction Tool <= 6.35 mm	Reaction tool for M6 nuts	$ 0.25	unit	2		1	$ 0.50
530	Assemble, 1 kg, Line-on-Line	Put clevis in position on throttle pedal	$ 0.13	unit	1		1	$ 0.13
540	Assemble, 1 kg, Line-on-Line	Add washers as spacers	$ 0.13	unit	1		1	$ 0.13
550	Ratchet <= 6.35 mm	Bolt which links clevis to throttle pedal	$ 0.50	unit	1		1	$ 0.50
560	Reaction Tool <= 6.35 mm	Reaction tool for M6 nut	$ 0.25	unit	1		1	$ 0.25
570	Assemble, 1 kg, Line-on-Line	Assemble jam nut onto clevis male part	$ 0.13	unit	1		1	$ 0.13
580	Hand, Loose <= 6.35 mm	Assemble jam nut onto clevis male part	$ 0.25	unit	1		1	$ 0.25
590	Assemble, 1 kg, Line-on-Line	Assemble female clevis onto male clevis	$ 0.13	unit	1		1	$ 0.13
600	Hand, Loose <= 25.4 mm	Assemble female clevis onto male clevis	$ 0.50	unit	1		1	$ 0.50

610	Wrench <= 6.35 mm	Tighten jam nut	$ 1.00	unit	1		1	$ 1.00
620	Assemble, 1 kg, Loose	Assemble throttle rocker and M5x60 pivot bolt	$ 0.06	unit	1		1	$ 0.06
630	Ratchet <= 6.35 mm	Tighten M5 nut	$ 0.50	unit	1		1	$ 0.50
640	Reaction Tool <= 6.35 mm	Reaction tool for M5 nut	$ 0.25	unit	1		1	$ 0.25
650	Assemble, 1 kg, Line-on-Line	Assemble link between clevis and rocker	$ 0.13	unit	1		1	$ 0.13
660	Assemble, 1 kg, Loose	Put bolt through cable attachment and rocker	$ 0.06	unit	1		1	$ 0.06
670	Ratchet <= 6.35 mm	Tighten M5 nut	$ 0.50	unit	1		1	$ 0.50
680	Reaction Tool <= 6.35 mm	Reaction tool for M5 nut	$ 0.25	unit	1		1	$ 0.25
690	Assemble, 3 kg, Line-on-Line	Place pedal base in position on rails	$ 0.38	unit	1		1	$ 0.38
700	Ratchet <= 25.4 mm	Bolt pedal base to pedal rails	$ 0.75	unit	4		1	$ 3.00
710	Reaction Tool <= 25.4 mm	Reaction tool for M10 nuts	$ 0.25	unit	4		1	$ 1.00
720	Assemble, 1 kg, Line-on-Line	Throttle cable adjuster	$ 0.13	unit	1		1	$ 0.13
720	Hand, Loose <= 25.4 mm	Throttle cable adjuster	$ 0.50	unit	1		1	$ 0.50
							Sub Total	**$ 54.57**

ItemOrder	Fastener	Use	UnitCost	Size1	Unit1	Size2	Unit2	Quantity	Sub Total
10	Bolt, Grade 8.8 (SAE 5)	Fix pedal brackets to pedal base	$ 0.04	6	mm	16	mm	6	$ 0.24
20	Nut, Grade 8.8 (SAE 5)	Fix pedal brackets to pedal base	$ 0.03	6	mm			6	$ 0.18
30	Washer, Grade 8.8 (SAE 5)	Fix pedal brackets to pedal base	$ 0.01	6	mm			6	$ 0.06
40	Bolt, Grade 8.8 (SAE 5)	Fix overtravel switch mount to pedal bracket	$ 0.02	4	mm	12	mm	4	$ 0.08
50	Nut, Grade 8.8 (SAE 5)	Fix overtravel switch mount to pedal bracket	$ 0.02	4	mm			4	$ 0.08
60	Washer, Grade 8.8 (SAE 5)	Fix overtravel switch mount to pedal bracket	$ 0.01	4	mm			4	$ 0.04
70	Bolt, Grade 8.8 (SAE 5)	Fix pedal pivots in pedal brackets	$ 0.02	5	mm	10	mm	4	$ 0.08
80	Washer, Grade 8.8 (SAE 5)	Fix pedal pivots in pedal brackets	$ 0.01	5	mm			4	$ 0.04
90	Bolt, Grade 8.8 (SAE 5)	Fix pedal pads to pedals	$ 0.01	4	mm	10	mm	6	$ 0.06
100	Nut, Grade 8.8 (SAE 5)	Fix pedal pads to pedals	$ 0.02	4	mm			4	$ 0.08
110	Bolt, Grade 8.8 (SAE 5)	Fix balance bar mount onto pedal base	$ 0.03	6	mm	12	mm	4	$ 0.12
120	Stud, Grade 8.8 (SAE 5)	To fix clevises to end of master-cylinders	$ 0.05	6	mm	25	mm	2	$ 0.10
130	Nut, Grade 8.8 (SAE 5)	Jam nuts for master-cylinder studs	$ 0.03	6	mm			4	$ 0.12
140	Retaining Ring, External	Retain master-cylinder bar in brake pedal	$ 0.03	10	mm			2	$ 0.06
150	Nut, Grade 8.8 (SAE 5)	Nuts for master-cylinder bar ends	$ 0.03	6	mm			2	$ 0.06
160	Rivet, Pop	Rivets for assembling the throttle cable support	$ 0.03					8	$ 0.24
170	Bolt, Grade 8.8 (SAE 5)	Fix throttle cable support ass. to pedal base	$ 0.04	6	mm	16	mm	2	$ 0.08
180	Nut, Grade 8.8 (SAE 5)	Fix throttle cable support ass. to pedal base	$ 0.03	6	mm			2	$ 0.06
190	Washer, Grade 8.8 (SAE 5)	Fix throttle cable support ass. to pedal base	$ 0.01	6	mm			2	$ 0.02
200	Bolt, Grade 8.8 (SAE 5)	Link throttle mechanism clevis to throttle pedal	$ 0.08	6	mm	36	mm	1	$ 0.08
210	Nut, Grade 8.8 (SAE 5)	Link throttle mechanism clevis to throttle pedal	$ 0.03	6	mm			1	$ 0.03
220	Nut, Grade 8.8 (SAE 5)	Jam nut for clevis	$ 0.03	6	mm			1	$ 0.03
230	Washer, Grade 8.8 (SAE 5)	Used as spacers for clevis on throttle pedal	$ 0.01	6	mm			3	$ 0.03
240	Bolt, Grade 8.8 (SAE 5)	Pivot for throttle mechanism rocker	$ 0.10	5	mm	60	mm	1	$ 0.10
250	Nut, Grade 8.8 (SAE 5)	Pivot for throttle mechanism rocker	$ 0.02	5	mm			1	$ 0.02
260	Bolt, Grade 8.8 (SAE 5)	Link throttle rocker to cable attachment part	$ 0.03	5	mm	22	mm	1	$ 0.03
270	Nut, Grade 8.8 (SAE 5)	Link throttle rocker to cable attachment part	$ 0.02	5	mm			1	$ 0.02
280	Bolt, Grade 8.8 (SAE 5)	Fix pedal base to pedal rails	$ 0.27	10	mm	40	mm	4	$ 1.08
290	Nut, Grade 8.8 (SAE 5)	Fix pedal base to pedal rails	$ 0.07	10	mm			4	$ 0.28
300	Washer, Grade 8.8 (SAE 5)	Fix pedal base to pedal rails	$ 0.01	10	mm			8	$ 0.08
								Sub Total	**$ 3.58**

ItemOrder	Tooling	Use	UnitCost	Unit	Quantity	PVF	FractionIncl	Sub Total
10	Welds - Welding Fixture	Pedal rails	$ 500.00	point	16	3000	1	$ 2.67
							Sub Total	**$ 2.67**

University	Ecole Centrale de Lyon			**Car #**	81	**Part Cost**	$ 22.32
System	Frame and Body	**FileLink1**				**Qty**	2
Assembly	Pedal Assembly	**FileLink2**		**FileLink1**			
Part	Pedal rail	**FileLink3**		**FileLink2**		**Extended Cost**	$ 44.64
P/N Base	04001			**FileLink3**			
Suffix	AA						
Details	Rails on which the pedal assembly is mounted						

ItemOrder	Material	Use	UnitCost	Size1	Unit1	Size2	Unit2	Area Name	Area	Length	Density	Quantity	Sub Total
10	Steel (per kg)	Steel square tube material used as rail stock	$ 2.25	22	mm	22	mm	Square 2mm thick, 22mm x 22mm	1.60E-04	0.450	8,010.00	1	$ 1.30
												Sub Total	**$ 1.30**

ItemOrder	Process	Use	UnitCost	Unit	Quantity	Multiplier	Mult. Val.	Sub Total
10	Machining Setup, Install and remove	Install and remove part from machine	$ 1.30	unit	1			$ 1.30
20	Machining	Shaping of the ends	$ 0.04	cm^3	1	Material - Steel	3	$ 0.12
30	Drilled holes < 25.4 mm dia.	adjustable mounting and weight reduction	$ 0.35	hole	56			$ 19.60
							Sub Total	**$ 21.02**

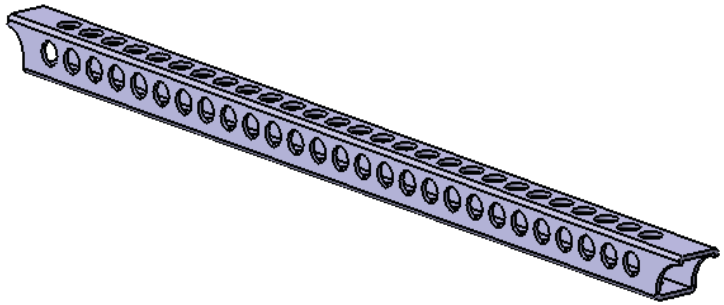

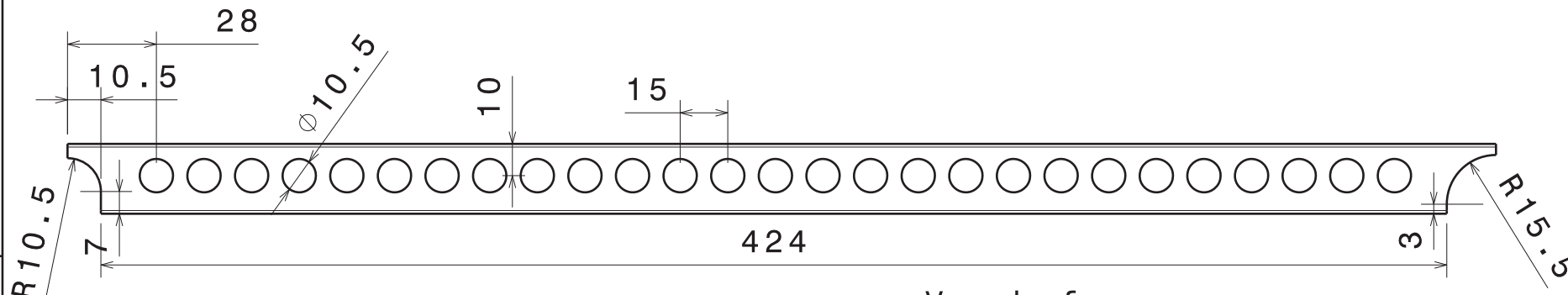

Vue de face
Echelle : 1:2

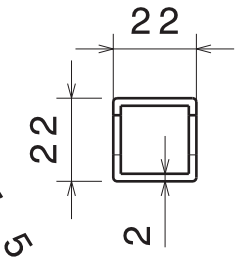

Vue de gauche
Echelle : 1:2

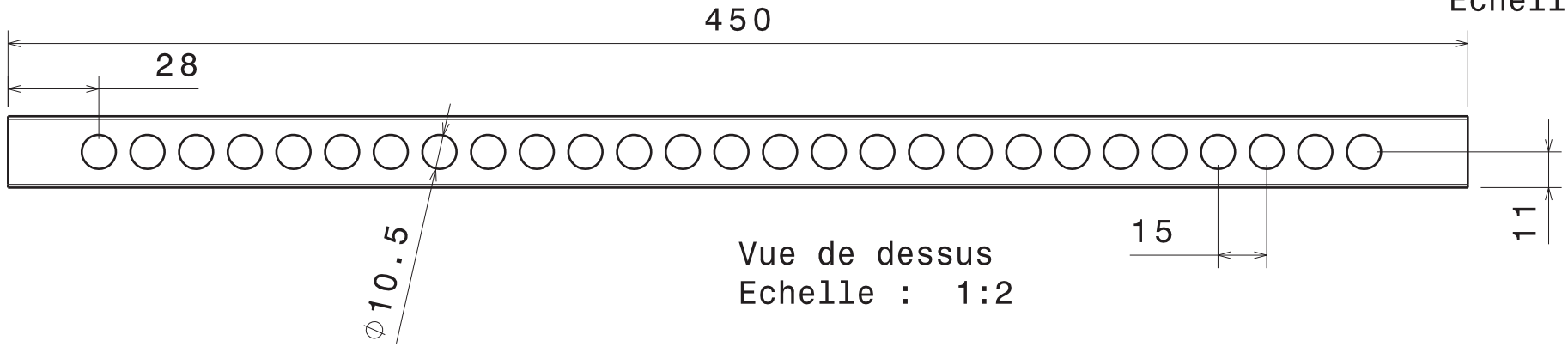

Vue de dessus
Echelle : 1:2

Tolérances générales ISO 2768 - mK

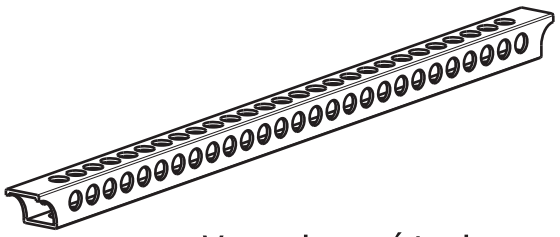

Vue isométrique
Echelle : 1:4

Taille A4		Ecurie Piston Sport Auto
Dessiné par Antoine ROSSÉ	Date 19/11/2013	Désignation: Rail de fixation du pédalier
Coordonnées antoine.rosse@ecl2015.ec-lyon.fr 06 42 73 37 30		Quantité 2 / Matériau Acier / Version v1.0
Vérifié par	Date	Echelle 1:1 / Numéro du plan 14 M048 / Feuille 1/1

170

University	Ecole Centrale de Lyon			**Car #**	81	**Part Cost**	$ 1.34
System	Frame and Body	**FileLink1**				**Qty**	4
Assembly	Pedal Assembly	**FileLink2**		**FileLink1**			
Part	Pedal bushing	**FileLink3**		**FileLink2**		**Extended Cost**	$ 5.36
P/N Base	04002			**FileLink3**			
Suffix	AA						
Details	Bronze bushings used for pedal pivots						

ItemOrder	Material	Use	UnitCost	Size1	Unit1	Size2	Unit2	Area Name	Area	Length	Density	Quantity	Sub Total
10	Bronze (per kg)	Stock material for bushings	$ 2.20					Round area, 5mm radius	7.85E-05	0.012	6,400.00	1	$ 0.01
												Sub Total	**$ 0.01**

ItemOrder	Process	Use	UnitCost	Unit	Quantity	Multiplier	Mult. Val.	Sub Total
10	Machining Setup, Install and remove	Setup for machining (turning) and removal	$ 1.30	unit	1			$ 1.30
20	Machining	Machining of the bushing (turning)	$ 0.04	cm^3	0.5	Material - Bronze	1.33	$ 0.03
							Sub Total	**$ 1.33**

University	Ecole Centrale de Lyon			**Car #**	81	**Part Cost**	$ 44.46
System	Frame and Body	**FileLink1**				**Qty**	1
Assembly	Pedal Assembly	**FileLink2**		**FileLink1**			
Part	Pedal Base	**FileLink3**		**FileLink2**		**Extended Cost**	$ 44.46
P/N Base	04003			**FileLink3**			
Suffix	AA						
Details	Laser cut steel plate						

ItemOrder	Material	Use	UnitCost	Size1	Unit1	Size2	Unit2	Area Name	Area	Length	Density	Quantity	Sub Total
10	Steel, stainless (per kg)	3mm thick sheet metal used for pedal base	$ 2.25	2.34	kg							1	$ 5.26
												Sub Total	**$ 5.26**

ItemOrder	Process	Use	UnitCost	Unit	Quantity	Multiplier	Mult. Val.	Sub Total
10	Machining Setup, Install and remove	Install and remove part from laser machine	$ 1.30	unit	1			$ 1.30
20	Laser cut	cutout the outline, shapes and holes	$ 0.01	cm	984	Material - Stainless Steel	3.75	$ 36.90
30	Sheet metal bends	for edge bends	$ 0.25	bend	4			$ 1.00
							Sub Total	**$ 39.20**

Congés entre 3mm et 6mm de rayon.

A part le logo Dynamix,
la pièce est symétrique

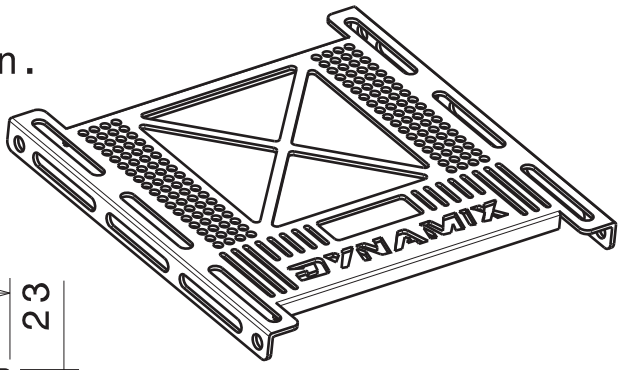

Vue isométrique
Echelle : 1:5

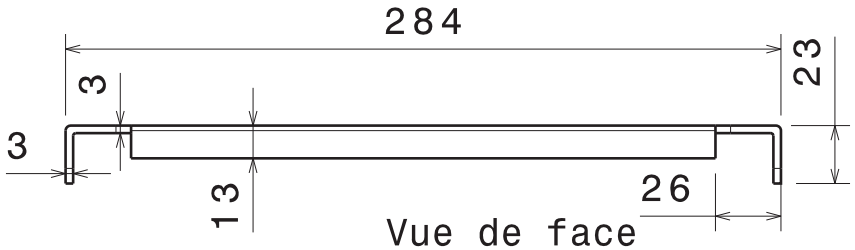

Vue de face
Echelle : 1:3

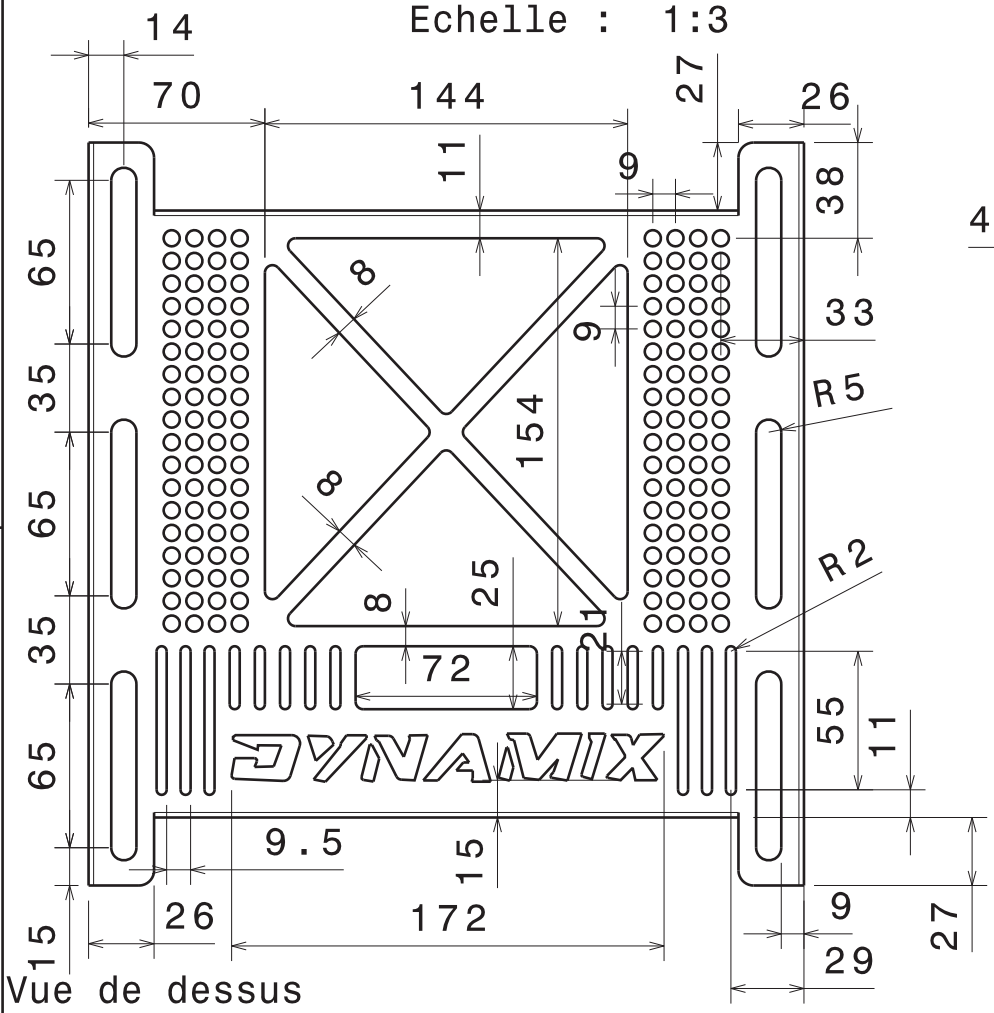

Vue de dessus
Echelle : 1:3

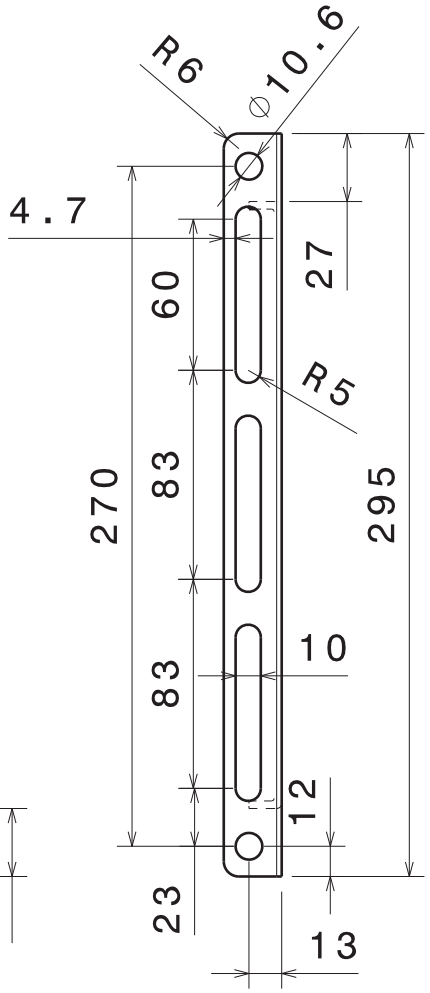

Vue de gauche
Echelle : 1:3

Tolérances générales ISO 2768 - mK

Taille A4		Ecurie Piston Sport Auto	
Dessiné par Antoine ROSSÉ	Date 18/11/2013	Désignation Base du pédalier	
Coordonnées antoine.rosse@ecl2015.ec-lyon.fr 06 42 73 37 30		Quantité 1	Matériau Acier Inox	Version v1.0
Vérifié par	Date	Echelle 1:3	Numéro du plan 14 M00x	Feuille 1/1

University	Ecole Centrale de Lyon			**Car #**	81	**Part Cost**	$ 14.10
System	Frame and Body	**FileLink1**				**Qty**	1
Assembly	Pedal Assembly	**FileLink2**		**FileLink1**			
Part	Brake Pedal	**FileLink3**		**FileLink2**		**Extended Cost**	$ 14.10
P/N Base	04004			**FileLink3**			
Suffix	AA						
Details	Machined aluminium pedal						

ItemOrder	Material	Use	UnitCost	Size1	Unit1	Size2	Unit2	Area Name	Area	Length	Density	Quantity	Sub Total
10	Aluminium, normal (per kg)	Material for pedal	$ 4.20	34	mm	34	mm	Rectangular area 34mm x 34mm	1.16E-03	0.213	2,710.00	1	$ 2.80
												Sub Total	**$ 2.80**

ItemOrder	Process	Use	UnitCost	Unit	Quantity	Multiplier	Mult. Val.	Sub Total
10	Machining Setup, Install and remove	Setup for machining and removal	$ 1.30	unit	1			$ 1.30
20	Machining	Material removal - outer profile and slot	$ 0.04	cm^3	80.5	Material - Aluminum	1	$ 3.22
30	Machining Setup, Change	Setup for next machining step	$ 0.65	unit	1			$ 0.65
40	Machining	Material removal and Slot	$ 0.04	cm^3	26.6	Material - Aluminum	1	$ 1.06
50	Machining Setup, Change	Setup for next machining step	$ 0.65	unit	1			$ 0.65
60	Machining	Material removal on back of pedal	$ 0.04	cm^3	22.8	Material - Aluminum	1	$ 0.91
70	Drilled holes < 25.4 mm dia.	Holes at top for master-cylinder axle	$ 0.35	hole	3			$ 1.05
80	Drilled holes < 25.4 mm dia.	Pedal mount hole	$ 0.35	hole	1			$ 0.35
90	Ream hole	Reamed pedal mount hole for bushings	$ 0.35	hole	1			$ 0.35
100	Drilled holes < 25.4 mm dia.	Holes for pedal face	$ 0.35	hole	3			$ 1.05
110	Tapping holes	Tapped holes for pedal face mount	$ 0.35	hole	2			$ 0.70
							Sub Total	**$ 11.30**

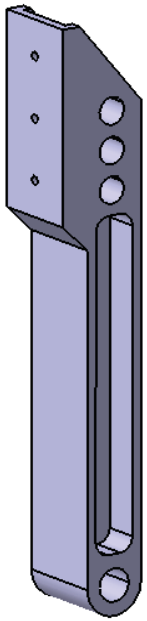

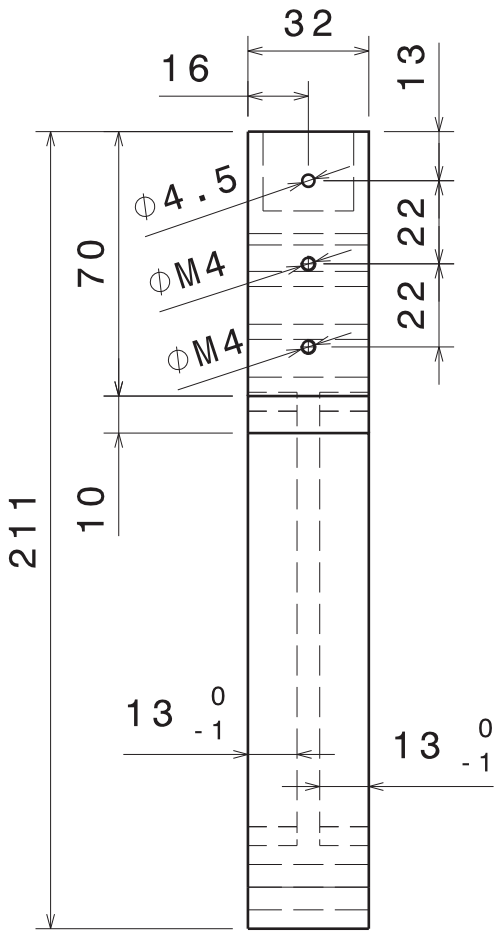

Vue de face
Echelle : 1:2

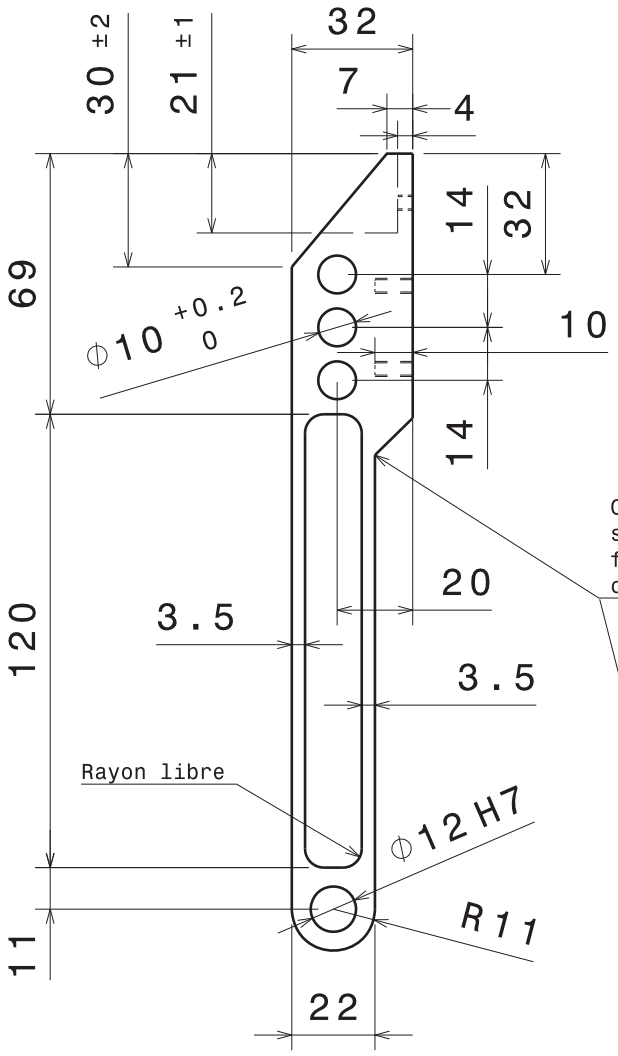

Vue de gauche
Echelle : 1:2

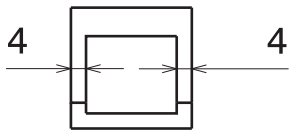

Vue de dessus
Echelle : 1:2

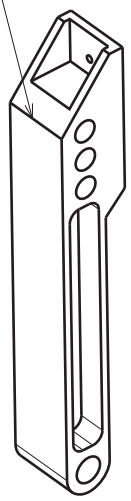

Vue isométrique
Echelle : 1:3

Congés libres jusqu'à 5mm de rayon sur toutes les arrêtes d'angles intérieures non-côtées

Casser les angles vifs Tolérances Générales ISO 2768-mK

Taille A4		Ecurie Piston Sport Auto	
Dessiné par Antoine ROSSÉ	Date 19/12/2013	Désignation Pédale de frein	
Coordonnées 06 42 73 37 30 antoine.rosse@ecl2015.ec-lyon.fr		Quantité 1	Matériau Aluminium 2017	Version v3.0
Date de livraison souhaitée : 28/01/2014		Echelle 1:2	Numéro du plan 14 M108	Feuille 1/1

University	Ecole Centrale de Lyon			**Car #**	81	**Part Cost**	$ 10.73
System	Frame and Body	**FileLink1**				**Qty**	1
Assembly	Pedal Assembly	**FileLink2**		**FileLink1**			
Part	Brake Pedal Bracket	**FileLink3**		**FileLink2**		**Extended Cost**	$ 10.73
P/N Base	04005			**FileLink3**			
Suffix	AA						
Details	Machined aluminium pedal bracket						

ItemOrder	Material	Use	UnitCost	Size1	Unit1	Size2	Unit2	Area Name	Area	Length	Density	Quantity	Sub Total
10	Aluminium, normal (per kg)	Material for pedal bracket	$ 4.20	47	mm	37	mm	Rectangular area 47mm x 37mm	1.74E-03	0.091	2,710.00	1	$ 1.80
												Sub Total	**$ 1.80**

ItemOrder	Process	Use	UnitCost	Unit	Quantity	Multiplier	Mult. Val.	Sub Total
10	Machining Setup, Install and remove	Setup for machining and removal	$ 1.30	unit	1			$ 1.30
20	Machining	Material removal - side view profile and holes	$ 0.04	cm^3	32.7	Material - Aluminum	1	$ 1.31
30	Machining Setup, Change	Setup for next machining step	$ 0.65	unit	1			$ 0.65
40	Machining	Inside "shell" and bottom cutout	$ 0.04	cm^3	108.2	Material - Aluminum	1	$ 4.33
50	Machining Setup, Change	Setup for the next machining step	$ 0.65	unit	1			$ 0.65
60	Machining	Last face shape and holes	$ 0.04	cm^3	17.2	Material - Aluminum	1	$ 0.69
							Sub Total	**$ 8.92**

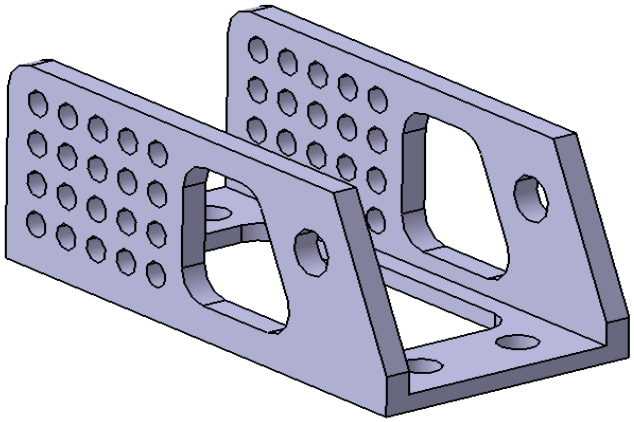

Vue de face
Echelle : 1:1

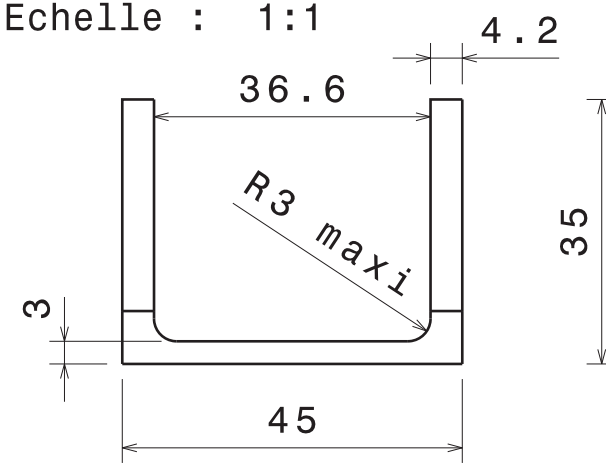

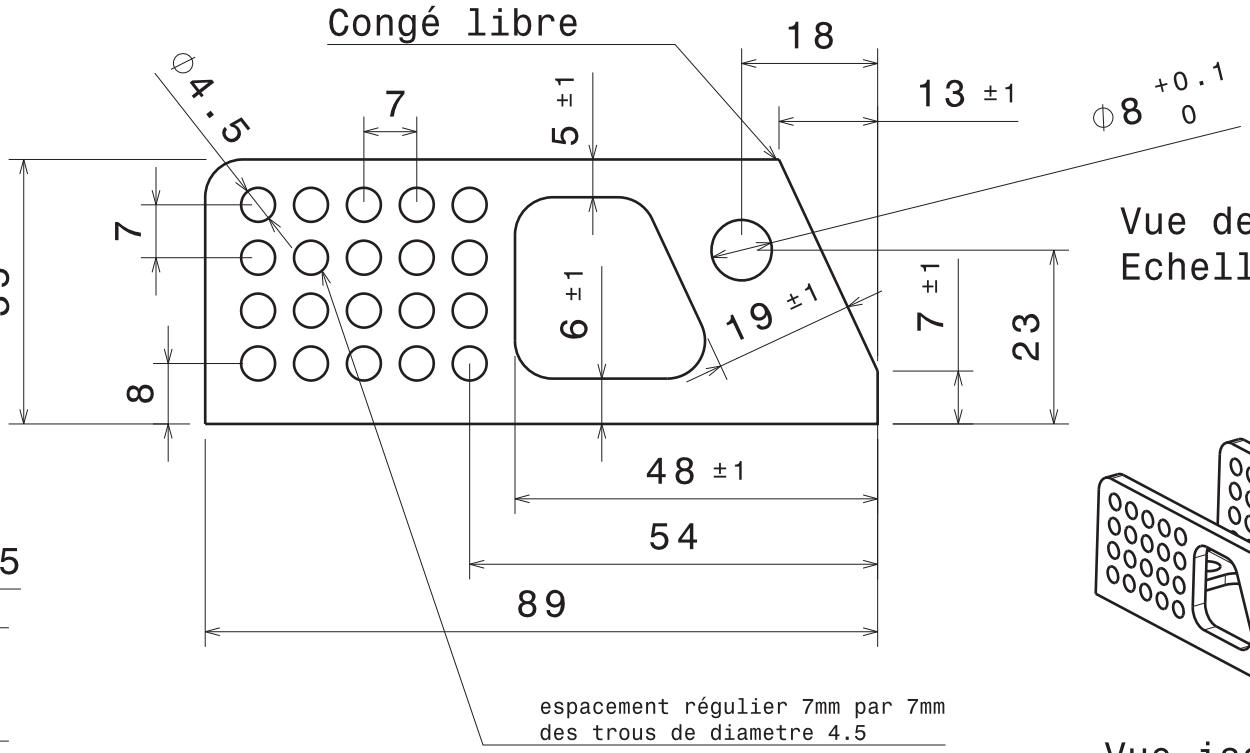

Vue de gauche
Echelle : 1:1

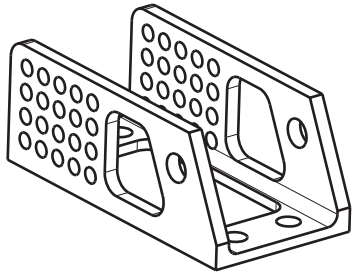

Vue isométrique
Echelle : 1:2

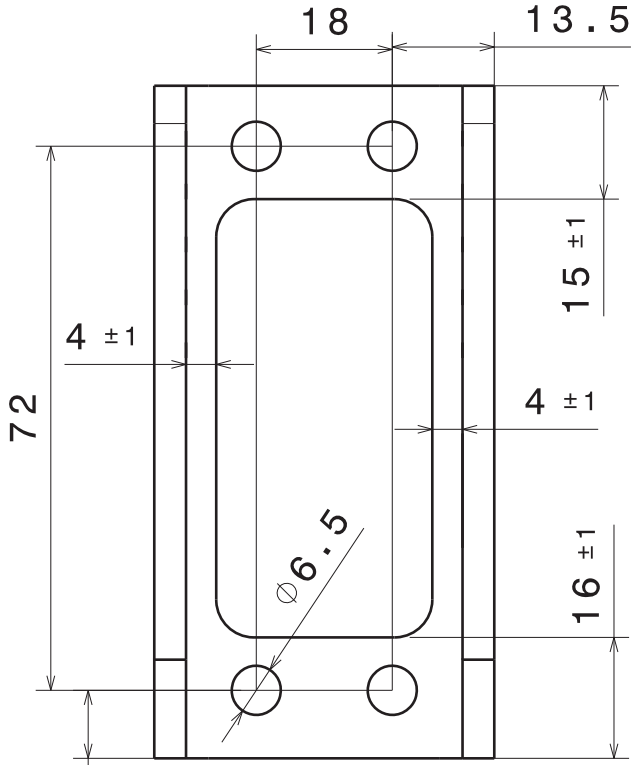

Vue de dessus
Echelle : 1:1

Rayons libres sur tous les congés non-côtés

Casser les angles vifs

Tolérances Générales ISO 2768-mK

Taille A4		Ecurie Piston Sport Auto
Dessiné par Antoine ROSSÉ	Date 19/12/2013	Désignation: Support de pédale de frein
Coordonnées 06 42 73 37 30 antoine.rosse@ecl2015.ec-lyon.fr		Quantité 1 / Matériau Aluminium 2017 / Version v3.0
Date de livraison souhaitée : 28/01/2014		Echelle 1:1 / Numéro du plan 14 M110 / Feuille 1/1

University	Ecole Centrale de Lyon			**Car #**	81	**Part Cost**	$ 3.52
System	Frame and Body	**FileLink1**				**Qty**	1
Assembly	Pedal Assembly	**FileLink2**		**FileLink1**			
Part	Brake pedal pivot	**FileLink3**		**FileLink2**		**Extended Cost**	$ 3.52
P/N Base	04006			**FileLink3**			
Suffix	AA						
Details	stainless steel axle for mounting the pedal						

ItemOrder	Material	Use	UnitCost	Size1	Unit1	Size2	Unit2	Area Name	Area	Length	Density	Quantity	Sub Total
10	Steel, Stainless (per kg)	Stock material for axle	$ 2.25	10	mm			Round 10 mm diam.	7.85E-05	0.047	8,010.00	1	$ 0.07
												Sub Total	**$ 0.07**

ItemOrder	Process	Use	UnitCost	Unit	Quantity	Multiplier	Mult. Val.	Sub Total
10	Machining Setup, Install and remove	Setup for machining and removal	$ 1.30	unit	2			$ 2.60
20	Machining	Machining - turning	$ 0.04	cm^3	1	Material - Stainless Steel	3.75	$ 0.15
30	Tapping holes	Tapping of both ends (1.5 cm each end)	$ 0.35	hole	2			$ 0.70
							Sub Total	**$ 3.45**

University	Ecole Centrale de Lyon			**Car #**	81	**Part Cost**	$ 2.86
System	Frame and Body	**FileLink1**				**Qty**	1
Assembly	Pedal Assembly	**FileLink2**		**FileLink1**			
Part	Brake pedal pad	**FileLink3**		**FileLink2**		**Extended Cost**	$ 2.86
P/N Base	04007			**FileLink3**			
Suffix	AA						
Details	Laser cut then bent aluminium plate						

ItemOrder	Material	Use	UnitCost	Size1	Unit1	Size2	Unit2	Area Name	Area	Length	Density	Quantity	Sub Total
10	Aluminium, normal (per kg)	Material for pedal face	$ 4.20	105	mm	95	mm	Rectangular area 105mm x 95mm	9.98E-03	0.002	2,710.00	1	$ 0.23
												Sub Total	**$ 0.23**

ItemOrder	Process	Use	UnitCost	Unit	Quantity	Multiplier	Mult. Val.	Sub Total
10	Machining Setup, Install and remove	Install and remove part from laser machine	$ 1.30	unit	1			$ 1.30
20	Laser cut	cutout the outline and holes	$ 0.01	cm	58.4	Material - Aluminium	1	$ 0.58
30	Sheet metal bends	for edge bends	$ 0.25	bend	3			$ 0.75
							Sub Total	**$ 2.63**

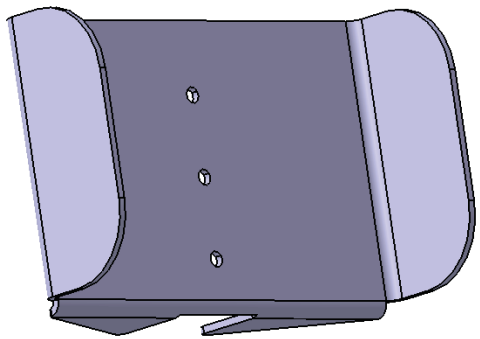

University	Ecole Centrale de Lyon			**Car #**	81	**Part Cost**	$ 14.75
System	Frame and Body	**FileLink1**				**Qty**	1
Assembly	Pedal Assembly	**FileLink2**		**FileLink1**			
Part	Throttle Pedal	**FileLink3**		**FileLink2**		**Extended Cost**	$ 14.75
P/N Base	04008			**FileLink3**			
Suffix	AA						
Details	Machined aluminium pedal						

ItemOrder	Material	Use	UnitCost	Size1	Unit1	Size2	Unit2	Area Name	Area	Length	Density	Quantity	Sub Total
10	Aluminium, normal (per kg)	Material for pedal	$ 4.20	31.5	mm	30	mm	Rectangular area 31.5mm x 30mm	9.45E-04	0.212	2,710.00	1	$ 2.28
												Sub Total	**$ 2.28**

ItemOrder	Process	Use	UnitCost	Unit	Quantity	Multiplier	Mult. Val.	Sub Total
10	Machining Setup, Install and remove	Setup and removal of the machining of the pedal body	$ 1.30	unit	1		1	$ 1.30
20	Machining	Material removal - side view profile and holes	$ 0.04	cm^3	93.2	Material - Aluminum	1	$ 3.73
30	Machining Setup, Change	Setup for next machining step	$ 0.65	unit	1		1	$ 0.65
40	Machining	Surface machining - material removal	$ 0.04	cm^3	6.71	Material - Aluminum	1	$ 0.27
50	Machining Setup, Change	Setup for next machining step	$ 0.65	unit	1		1	$ 0.65
60	Machining	Last face and holes	$ 0.04	cm^3	48.2	Material - Aluminum	1	$ 1.93
70	Drilled holes < 25.4 mm dia.	Hole for pedal mount	$ 0.35	hole	1		1	$ 0.35
80	Ream hole	Reamed hole for bushings insertion	$ 0.35	hole	1		1	$ 0.35
90	Drilled holes < 25.4 mm dia.	Holes for pedal face	$ 0.35	hole	3		1	$ 1.05
100	Drilled holes < 25.4 mm dia.	Hole for pedal stop	$ 0.35	hole	1		1	$ 0.35
110	Tapping holes	Tapped hole for pedal stop	$ 0.35	hole	1		1	$ 0.35
120	Hand, Tight <= 6.35 mm	Insert M6 pedal stop screw	$ 0.50	unit	1		1	$ 0.50
130	Ratchet <= 6.35 mm	Tighten nuts for pedal stop	$ 0.50	unit	2		1	$ 1.00
							Sub Total	**$ 12.47**

ItemOrder	Fastener	Use	UnitCost	Size1	Unit1	Size2	Unit2	Quantity	Sub Total
10	Bolt, Grade 8.8 (SAE 5)	Negative pedal stop	$ 0.05	6	mm	25	mm	1	$ 0.05
20	Nut, Grade 8.8 (SAE 5)	Nuts for negative pedal stop	$ 0.03	6	mm			2	$ 0.06
								Sub Total	**$ 0.11**

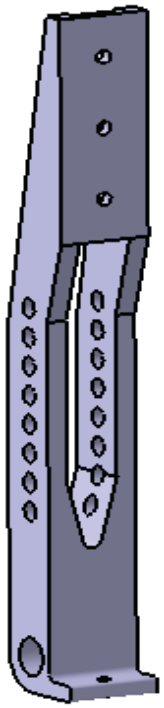

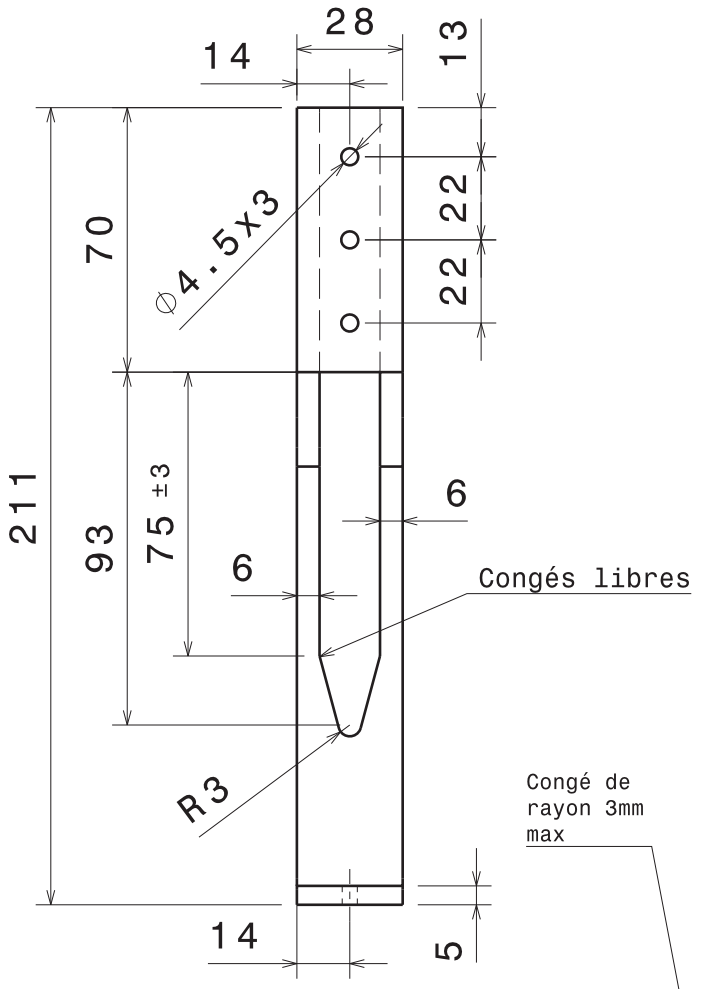

Vue de face
Echelle : 1:2

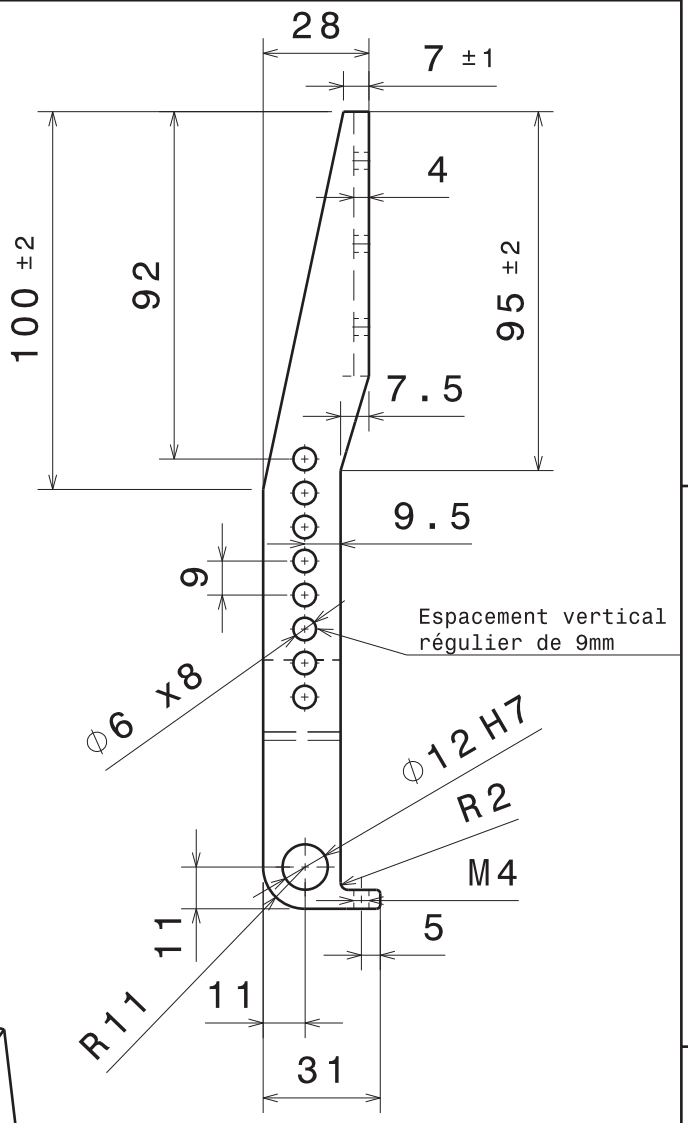

Vue de gauche
Echelle : 1:2

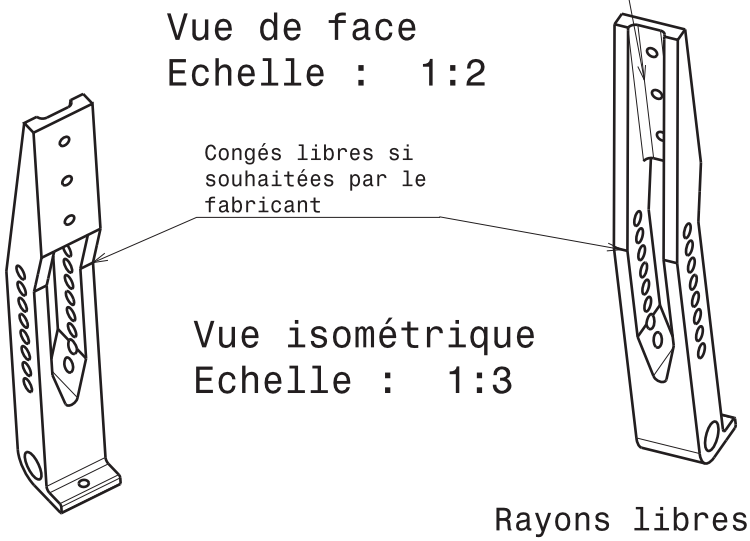

Vue isométrique
Echelle : 1:3

Rayons libres sur tous les congés non-côtés

Casser les angles vifs Tolérances Générales ISO 2768-mK

Taille A4		Ecurie Piston Sport Auto
Dessiné par Antoine ROSSÉ	Date 19/12/2013	Désignation: Pédale d'accélérateur
Coordonnées 06 42 73 37 30 antoine.rosse@ecl2015.ec-lyon.fr	Quantité 1	Matériau Aluminium 2017 / Version v3.0
Date de livraison souhaitée : 28/01/2014	Echelle 1:2	Numéro du plan 14 M107 / Feuille 1/1

University	Ecole Centrale de Lyon			**Car #**	81	**Part Cost**	$ 9.34
System	Frame and Body	**FileLink1**				**Qty**	1
Assembly	Pedal Assembly	**FileLink2**		**FileLink1**			
Part	Throttle Pedal Bracket	**FileLink3**		**FileLink2**		**Extended Cost**	$ 9.34
P/N Base	04009			**FileLink3**			
Suffix	AA						
Details	Machined aluminium pedal bracket						

ItemOrder	Material	Use	UnitCost	Size1	Unit1	Size2	Unit2	Area Name	Area	Length	Density	Quantity	Sub Total
10	Aluminium, normal (per kg)	Material for pedal bracket	$ 4.20	43	mm	32	mm	Rectangular area 43mm x 32mm	1.38E-03	0.081	2,710.00	1	$ 1.27
												Sub Total	**$ 1.27**

ItemOrder	Process	Use	UnitCost	Unit	Quantity	Multiplier	Mult. Val.	Sub Total
10	Machining Setup, Install and remove	Setup for machining and removal	$ 1.30	unit	1			$ 1.30
20	Machining	Material removal - side view profile	$ 0.04	cm^3	5.3	Material - Aluminum	1	$ 0.21
30	Machining Setup, Change	Setup for next machining step	$ 0.65	unit	1			$ 0.65
40	Machining	Inside "shell" and bottom cutout	$ 0.04	cm^3	2	Material - Aluminum	1	$ 0.08
50	Machining Setup, Change	Setup for next machining step	$ 0.65	unit	1			$ 0.65
60	Machining	Finish	$ 0.04	cm^3	49.2	Material - Aluminum	1	$ 1.97
70	Drilled holes < 25.4 mm dia.	Holes on sides for pedal mount	$ 0.35	hole	2			$ 0.70
80	Drilled holes < 25.4 mm dia.	Holes on bottom for bracket mount	$ 0.35	hole	2			$ 0.70
90	Drilled holes < 25.4 mm dia.	Hole for pedal stop	$ 0.35	hole	1			$ 0.35
100	Tapping holes	Tap hole for pedal stop	$ 0.35	hole	1			$ 0.35
110	Hand, Tight <= 6.35 mm	Insert M6 pedal stop screw	$ 0.50	unit	1		1	$ 0.50
120	Ratchet <= 6.35 mm	Tighten jam nut for pedal stop	$ 0.50	unit	1		1	$ 0.50
							Sub Total	**$ 7.96**

ItemOrder	Fastener	Use	UnitCost	Size1	Unit1	Size2	Unit2	Quantity	Sub Total
10	Bolt, Grade 8.8 (SAE 5)	Positive pedal stop	$ 0.05	6	mm	25	mm	1	$ 0.05
20	Nut, Grade 8.8 (SAE 5)	Jam nut for positive pedal stop	$ 0.03	6	mm			1	$ 0.06
								Sub Total	**$ 0.11**

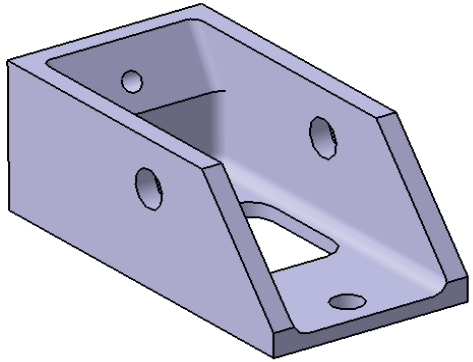

Vue de face
Echelle : 1:1

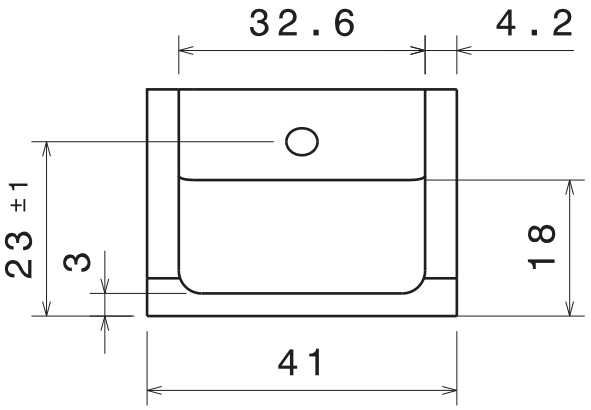

Vue de gauche
Echelle : 1:1

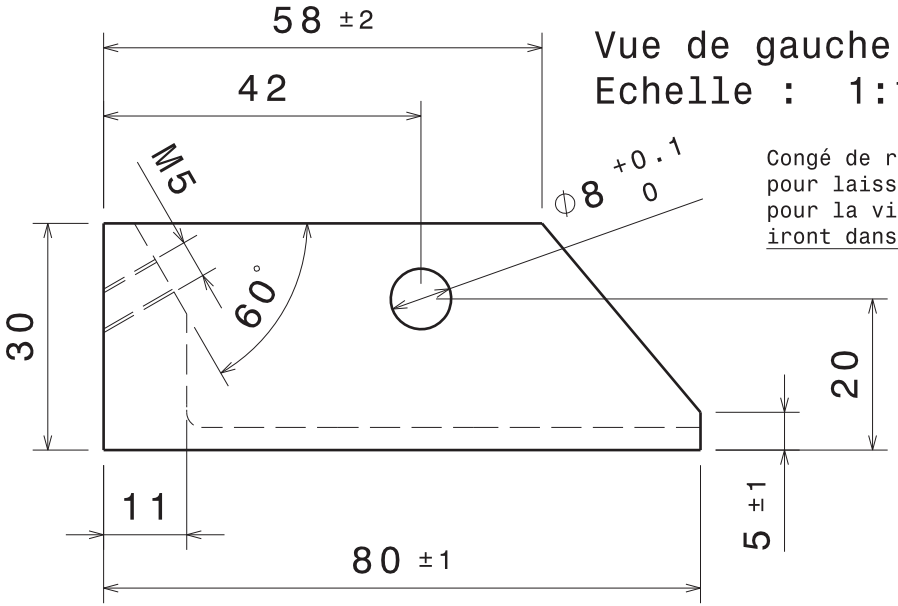

Congé de rayon 2mm max
pour laisser assez de place
pour la vis et rondelle qui
iront dans ce trou

Congé
libre

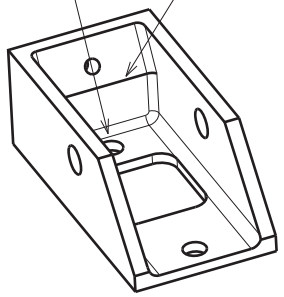

Vue de dessus
Echelle : 1:1

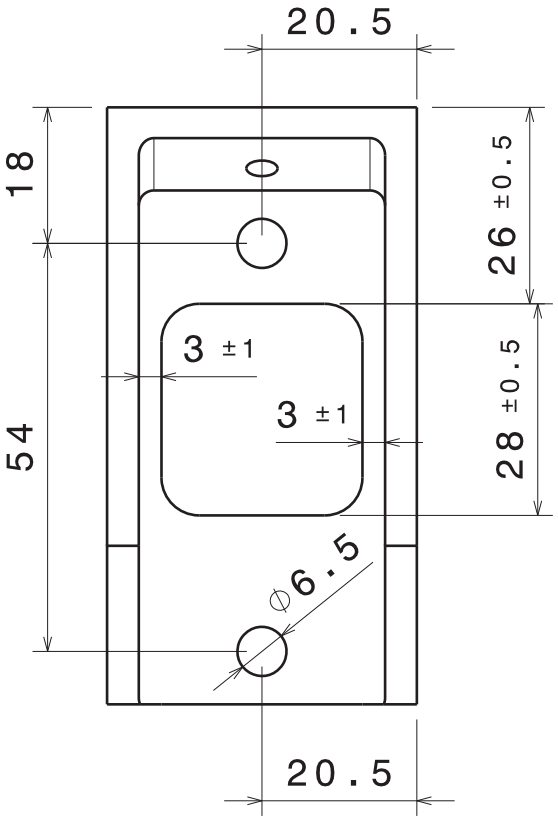

Vue isométrique
Echelle : 1:2

Rayons libres sur tous les congés d'arrêtes non-côtés

Casser les angles vifs Tolérances Générales ISO 2768-mK

Taille A4		Ecurie Piston Sport Auto
Dessiné par Antoine ROSSÉ	Date 24/11/2013	Désignation: Support de pédale accélérateur
Coordonnées 06 42 73 37 30 antoine.rosse@ecl2015.ec-lyon.fr		Quantité 1 / Matériau Aluminium / Version v1.0
Date de livraison souhaitée : 28/01/2014		Echelle 1:1 / Numéro du plan 14 M109 / Feuille 1/1

University	Ecole Centrale de Lyon			**Car #**	81	**Part Cost**	$ 3.51
System	Frame and Body	**FileLink1**				**Qty**	1
Assembly	Pedal Assembly	**FileLink2**		**FileLink1**			
Part	Throttle pedal pivot	**FileLink3**		**FileLink2**		**Extended Cost**	$ 3.51
P/N Base	04010			**FileLink3**			
Suffix	AA						
Details	stainless steel axle for mounting the pedal						

ItemOrder	Material	Use	UnitCost	Size1	Unit1	Size2	Unit2	Area Name	Area	Length	Density	Quantity	Sub Total
10	Steel, Stainless (per kg)	Stock material for axle	$ 2.25	10	mm			Round 10 mm diam.	7.85E-05	0.045	8,010.00	1	$ 0.06
												Sub Total	**$ 0.06**

ItemOrder	Process	Use	UnitCost	Unit	Quantity	Multiplier	Mult. Val.	Sub Total
10	Machining Setup, Install and remove	Setup for machining and removal	$ 1.30	unit	2			$ 2.60
20	Machining	Machining - turning	$ 0.04	cm^3	1	Material - Stainless Steel	3.75	$ 0.15
30	Tapping holes	Tapping of both ends (1.5 cm each end)	$ 0.35	hole	2			$ 0.70
							Sub Total	**$ 3.45**

University	Ecole Centrale de Lyon			**Car #**	81	**Part Cost**	$ 2.86
System	Frame and Body	**FileLink1**				**Qty**	1
Assembly	Pedal Assembly	**FileLink2**		**FileLink1**			
Part	Throttle pedal pad	**FileLink3**		**FileLink2**		**Extended Cost**	$ 2.86
P/N Base	04011			**FileLink3**			
Suffix	AA						
Details	Laser cut then bent aluminium plate						

ItemOrder	Material	Use	UnitCost	Size1	Unit1	Size2	Unit2	Area Name	Area	Length	Density	Quantity	Sub Total
10	Aluminium, normal (per kg)	Material for pedal face	$ 4.20	105	mm	95	mm	Rectangular area 105mm x 95mm	9.98E-03	0.002	2,710.00	1	$ 0.23
												Sub Total	**$ 0.23**

ItemOrder	Process	Use	UnitCost	Unit	Quantity	Multiplier	Mult. Val.	Sub Total
10	Machining Setup, Install and remove	Install and remove part from laser machine	$ 1.30	unit	1			$ 1.30
20	Laser cut	cutout the outline and holes	$ 0.01	cm	58.4	Material - Aluminium	1	$ 0.58
30	Sheet metal bends	for edge bends	$ 0.25	bend	3			$ 0.75
							Sub Total	**$ 2.63**

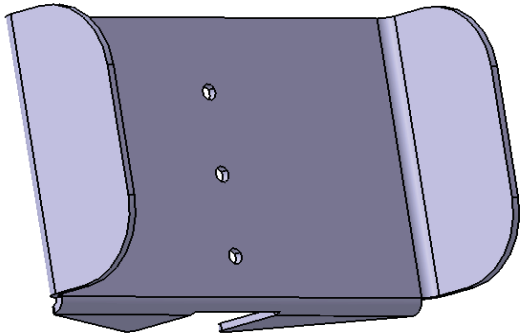

University	Ecole Centrale de Lyon			**Car #**	81	**Part Cost**	$ 10.62
System	Frame and Body	**FileLink1**				**Qty**	1
Assembly	Pedal Assembly	**FileLink2**		**FileLink1**			
Part	Balance bar mount	**FileLink3**		**FileLink2**		**Extended Cost**	$ 10.62
P/N Base	04012			**FileLink3**			
Suffix	AA						
Details	Machined aluminium part						

ItemOrder	Material	Use	UnitCost	Size1	Unit1	Size2	Unit2	Area Name	Area	Length	Density	Quantity	Sub Total
10	Aluminium, normal (per kg)	Material for part	$ 4.20	37	mm	34	mm	Rectangular area 37mm x 34mm	1.26E-03	0.052	2,710.00	1	$ 0.74
												Sub Total	**$ 0.74**

ItemOrder	Process	Use	UnitCost	Unit	Quantity	Multiplier	Mult. Val.	Sub Total
10	Machining Setup, Install and remove	Setup for machining and removal	$ 1.30	unit	1			$ 1.30
20	Machining	Material removal - side view profile and hole	$ 0.04	cm^3	29	Material - Aluminum	1	$ 1.16
30	Machining Setup, Change	Setup for machining of the opposite side	$ 0.65	unit	1			$ 0.65
40	Machining	Stock removal - surface finish	$ 0.04	cm^3	3	Material - Aluminum	1	$ 0.12
50	Ream hole	Reamed hole for balance bar	$ 0.35	hole	1			$ 0.35
60	Drilled holes < 25.4 mm dia.	Holes for fixing part onto pedal base	$ 0.35	hole	9			$ 3.15
70	Tapping holes	Holes for fixing part onto pedal base	$ 0.35	hole	9			$ 3.15
							Sub Total	**$ 9.88**

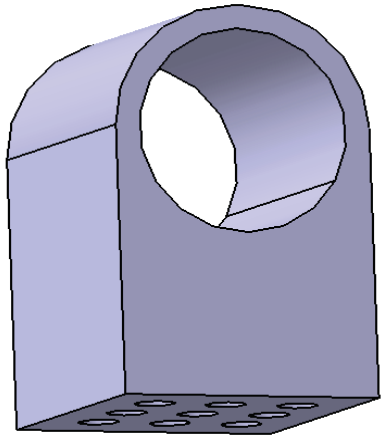

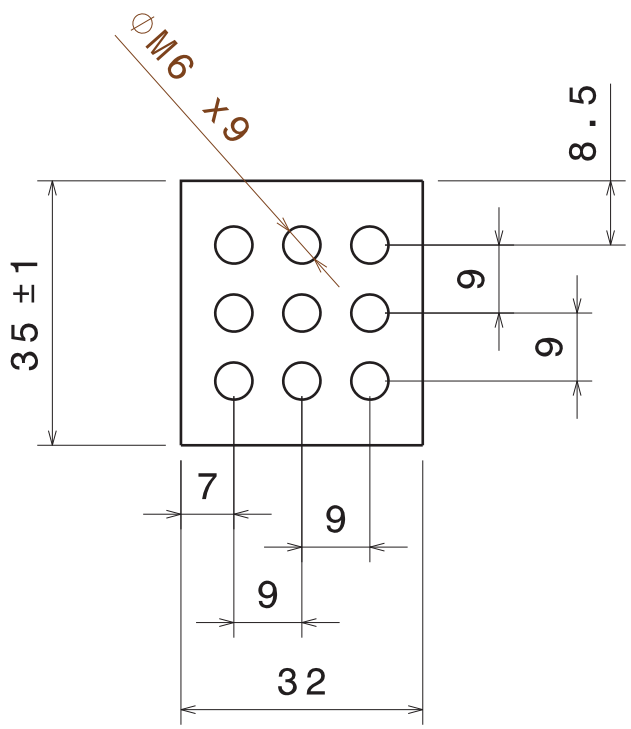

Vue de dessous
Echelle : 1:1

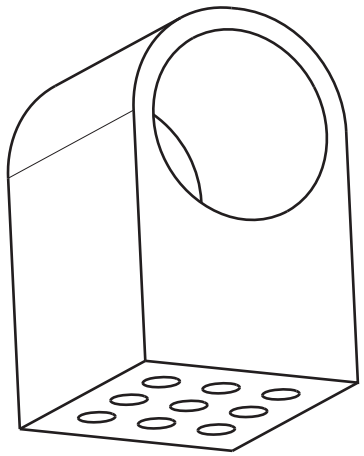

Vue isométrique
Echelle : 1:1

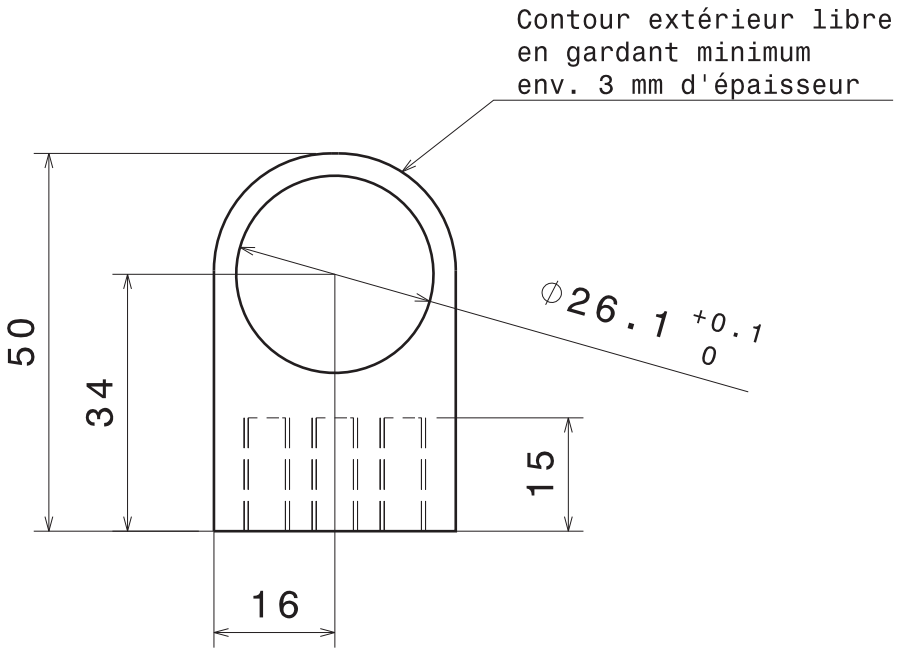

Vue de face
Echelle : 1:1

Tolérances Générales ISO 2768-mK

Taille A4		Ecurie Piston Sport Auto
Dessiné par Antoine ROSSÉ	Date 18/12/2013	Désignation: Support Palonnier
Coordonnées 06 42 73 37 30 antoine.rosse@ecl2015.ec-lyon.fr	Quantité 1	Matériau Aluminium 2017 / Version v1.0
Date de livraison souhaitée : 31/01/2014	Echelle 1:1	Numéro du plan 14 B034 / Feuille 1/1

University	Ecole Centrale de Lyon			**Car #**	81	**Part Cost**	$ 3.86
System	Frame and Body	**FileLink1**				**Qty**	2
Assembly	Pedal Assembly	**FileLink2**		**FileLink1**			
Part	Custom master-cylinder clevises	**FileLink3**		**FileLink2**		**Extended Cost**	$ 7.73
P/N Base	04013			**FileLink3**			
Suffix	AA						
Details	Machined aluminium part to replace original clevises						

ItemOrder	Material	Use	UnitCost	Size1	Unit1	Size2	Unit2	Area Name	Area	Length	Density	Quantity	Sub Total
10	Aluminium, normal (per kg)	Material for part	$ 4.20	40	mm	25	mm	Rectangular area 40mm x 25mm	1.00E-03	0.025	2,710.00	1	$ 0.28
												Sub Total	**$ 0.28**

ItemOrder	Process	Use	UnitCost	Unit	Quantity	Multiplier	Mult. Val.	Sub Total
10	Machining Setup, Install and remove	Setup for machining and removal	$ 1.30	unit	1			$ 1.30
20	Machining	Material removal - side view profile and hole	$ 0.04	cm^3	7.5	Material - Aluminum	1	$ 0.30
30	Machining Setup, Change	Setup for machining of the front view profile	$ 0.65	unit	1			$ 0.65
40	Machining	Material removal - front view profile	$ 0.04	cm^3	6	Material - Aluminum	1	$ 0.24
50	Machining	back surface : stock removal - surface finish	$ 0.04	cm^3	1	Material - Aluminum	1	$ 0.04
60	Ream hole	Reamed hole for balance bar	$ 0.35	hole	1			$ 0.35
70	Drilled holes < 25.4 mm dia.	Hole for assembling onto the master-cylinder	$ 0.35	hole	1			$ 0.35
80	Tapping holes	Hole for assembling onto the master-cylinder	$ 0.35	hole	1			$ 0.35
							Sub Total	**$ 3.58**

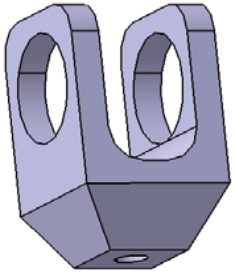

Vue de dessous
Echelle : 1:1

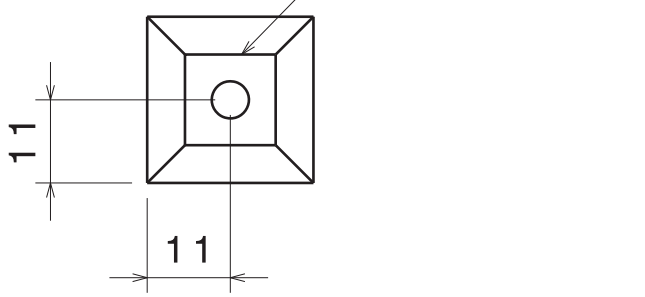

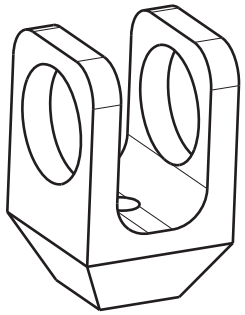

Vue isométrique
Echelle : 1:1

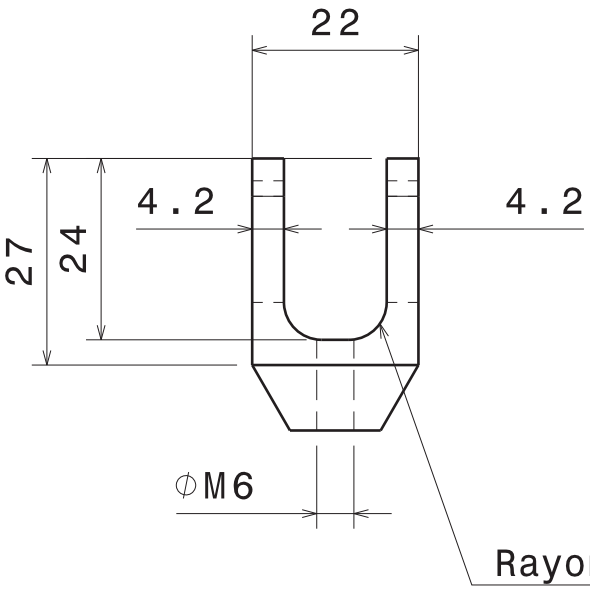

Vue de face
Echelle : 1:1

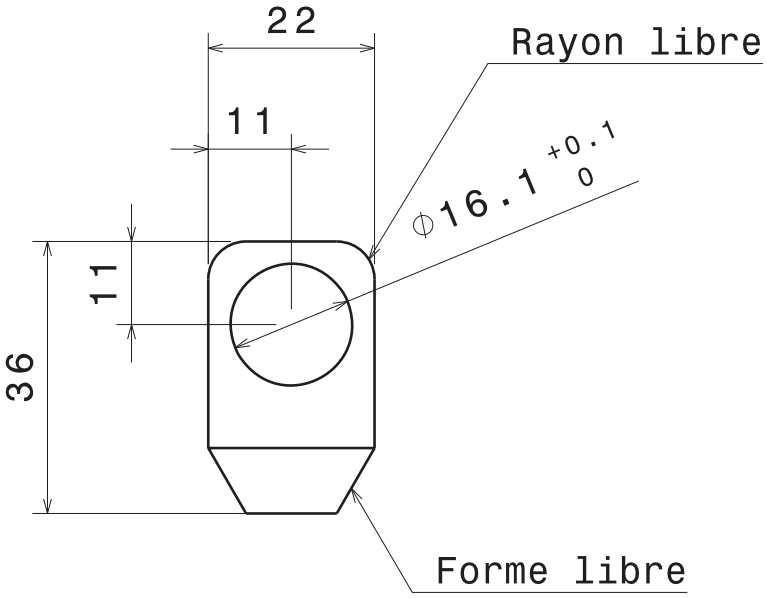

Vue de gauche
Echelle : 1:1

Tolérances Générales ISO 2768 - mK

Taille A4		Ecurie Piston Sport Auto	
Dessiné par Antoine ROSSÉ	Date 08/12/2013	Désignation Chape palonnier	
Coordonnées 06 42 73 37 30 antoine.rosse@ecl2015.ec-lyon.fr		Quantité 2	Matériau Aluminium 2017	Version v1.0
Date de livraison souhaitée 21/01/2014		Echelle 1:1	Numéro du plan 14 B038	Feuille 1/1

University	Ecole Centrale de Lyon			**Car #**	81	**Part Cost**	$ 2.99
System	Frame and Body	**FileLink1**				**Qty**	1
Assembly	Pedal Assembly	**FileLink2**		**FileLink1**			
Part	Master cylinder bar	**FileLink3**		**FileLink2**		**Extended Cost**	$ 2.99
P/N Base	04014			**FileLink3**			
Suffix	AA						
Details	strong steel bar for mounting master cylinders						

ItemOrder	Material	Use	UnitCost	Size1	Unit1	Size2	Unit2	Area Name	Area	Length	Density	Quantity	Sub Total
10	Steel, Alloy (per kg)	Stock material for axle	$ 2.25	12	mm			Round 12mm diam.	1.13E-04	0.094	8,010.00	1	$ 0.19
												Sub Total	**$ 0.19**

ItemOrder	Process	Use	UnitCost	Unit	Quantity	Multiplier	Mult. Val.	Sub Total
10	Machining Setup, Install and remove	Setup for machining and removal	$ 1.30	unit	1			$ 1.30
20	Machining	Machining - turning of one end	$ 0.04	cm^3	2.7	Material - Steel	3	$ 0.32
30	Machining Setup, Change	Setup for machining of the opposite side	$ 0.65	unit	1			$ 0.65
40	Machining	Machining - turning of the other end	$ 0.04	cm^3	2.7	Material - Steel	3	$ 0.32
50	Threading, External	Threading of both ends	$ 0.10	cm	2			$ 0.20
							Sub Total	**$ 2.80**

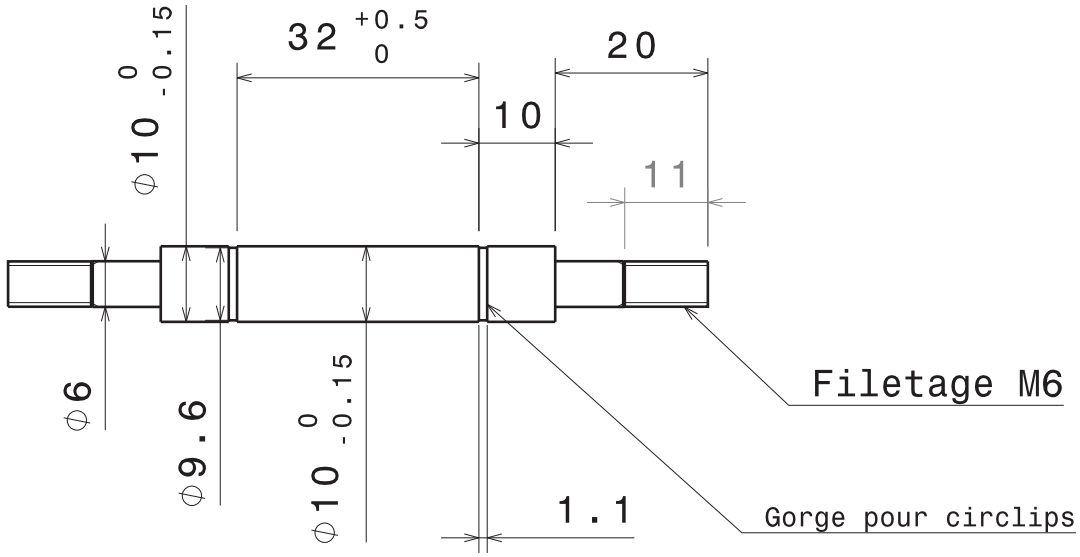

Vue de face
Echelle : 1:1

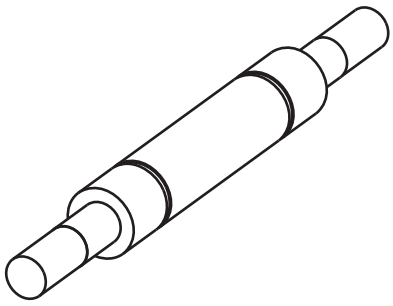

Vue isométrique
Echelle : 1:1

Tolérances Générales ISO 2768-mK

Taille A4		Ecurie Piston Sport Auto
Dessiné par Antoine ROSSÉ	Date 18/12/2013	Désignation: Axe maitres-cylindres
Coordonnées 06 42 73 37 30 antoine.rosse@ecl2015.ec-lyon.fr	Quantité 1	Matériau: Acier 40CrMoV4-6 (1.7711) ou équivalent
		Version v1.0
Date de livraison souhaitée : 07/02/2014	Echelle 1:1	Numéro du plan 14 B035
		Feuille 1/1

University	Ecole Centrale de Lyon			**Car #**	81	**Part Cost**	$ 2.53
System	Frame and Body	**FileLink1**				**Qty**	1
Assembly	Pedal Assembly	**FileLink2**		**FileLink1**			
Part	Throttle cable support - left	**FileLink3**		**FileLink2**		**Extended Cost**	$ 2.53
P/N Base	04015			**FileLink3**			
Suffix	AA						
Details	Laser cut then bent aluminium plate						

ItemOrder	Material	Use	UnitCost	Size1	Unit1	Size2	Unit2	Area Name	Area	Length	Density	Quantity	Sub Total
10	Aluminium, normal (per kg)	Material for part	$ 4.20	97	mm	90	mm	Rectangular area 97mm x 90mm	8.73E-03	0.002	2,710.00	1	$ 0.20
												Sub Total	**$ 0.20**

ItemOrder	Process	Use	UnitCost	Unit	Quantity	Multiplier	Mult. Val.	Sub Total
10	Machining Setup, Install and remove	Install and remove part from laser machine	$ 1.30	unit	1			$ 1.30
20	Laser cut	cutout the outline and holes	$ 0.01	cm	53.3	Material - Aluminium	1	$ 0.53
30	Sheet metal bends	for edge bends	$ 0.25	bend	2			$ 0.50
							Sub Total	**$ 2.33**

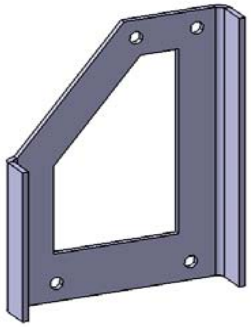

University	Ecole Centrale de Lyon			**Car #**	81	**Part Cost**	$ 2.53
System	Frame and Body	**FileLink1**				**Qty**	1
Assembly	Pedal Assembly	**FileLink2**		**FileLink1**			
Part	Throttle cable support - right	**FileLink3**		**FileLink2**		**Extended Cost**	$ 2.53
P/N Base	04016			**FileLink3**			
Suffix	AA						
Details	Laser cut then bent aluminium plate						

ItemOrder	Material	Use	UnitCost	Size1	Unit1	Size2	Unit2	Area Name	Area	Length	Density	Quantity	Sub Total
10	Aluminium, normal (per kg)	Material for part	$ 4.20	97	mm	90	mm	Rectangular area 97mm x 90mm	8.73E-03	0.002	2,710.00	1	$ 0.20
												Sub Total	**$ 0.20**

ItemOrder	Process	Use	UnitCost	Unit	Quantity	Multiplier	Mult. Val.	Sub Total
10	Machining Setup, Install and remove	Install and remove part from laser machine	$ 1.30	unit	1			$ 1.30
20	Laser cut	cutout the outline and holes	$ 0.01	cm	53.3	Material - Aluminium	1	$ 0.53
30	Sheet metal bends	for edge bends	$ 0.25	bend	2			$ 0.50
							Sub Total	**$ 2.33**

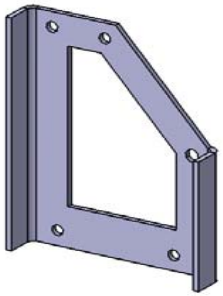

University	Ecole Centrale de Lyon			**Car #**	81	**Part Cost**	$ 2.11
System	Frame and Body	**FileLink1**				**Qty**	1
Assembly	Pedal Assembly	**FileLink2**		**FileLink1**			
Part	Throttle cable support - top	**FileLink3**		**FileLink2**		**Extended Cost**	$ 2.11
P/N Base	04017			**FileLink3**			
Suffix	AA						
Details	Laser cut then bent aluminium plate						

ItemOrder	Material	Use	UnitCost	Size1	Unit1	Size2	Unit2	Area Name	Area	Length	Density	Quantity	Sub Total
10	Aluminium, normal (per kg)	Material for part	$ 4.20	95	mm	31	mm	Rectangular area 95mm x 31mm	2.95E-03	0.002	2,710.00	1	$ 0.07
												Sub Total	**$ 0.07**

ItemOrder	Process	Use	UnitCost	Unit	Quantity	Multiplier	Mult. Val.	Sub Total
10	Machining Setup, Install and remove	Install and remove part from laser machine	$ 1.30	unit	1			$ 1.30
20	Laser cut	cutout the outline and holes	$ 0.01	cm	23.8	Material - Aluminium	1	$ 0.24
30	Sheet metal bends	for edge bends	$ 0.25	bend	2			$ 0.50
							Sub Total	**$ 2.04**

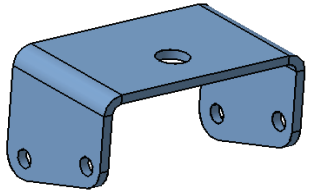

University	Ecole Centrale de Lyon			**Car #**	81	**Part Cost**	$ 2.21
System	Frame and Body	**FileLink1**				**Qty**	1
Assembly	Pedal Assembly	**FileLink2**		**FileLink1**			
Part	Throttle cable support - bottom	**FileLink3**		**FileLink2**		**Extended Cost**	$ 2.21
P/N Base	04018			**FileLink3**			
Suffix	AA						
Details	Laser cut then bent aluminium plate						

ItemOrder	Material	Use	UnitCost	Size1	Unit1	Size2	Unit2	Area Name	Area	Length	Density	Quantity	Sub Total
10	Aluminium, normal (per kg)	Material for part	$ 4.20	67	mm	80	mm	Rectangular area 67mm x 80mm	5.36E-03	0.002	2,710.00	1	$ 0.12
												Sub Total	**$ 0.12**

ItemOrder	Process	Use	UnitCost	Unit	Quantity	Multiplier	Mult. Val.	Sub Total
10	Machining Setup, Install and remove	Install and remove part from laser machine	$ 1.30	unit	1			$ 1.30
20	Laser cut	cutout the outline and holes	$ 0.01	cm	29	Material - Aluminium	1	$ 0.29
30	Sheet metal bends	for edge bends	$ 0.25	bend	2			$ 0.50
							Sub Total	**$ 2.09**

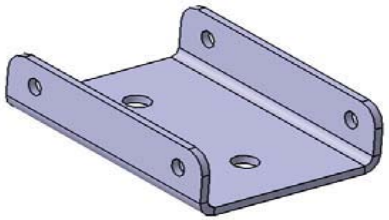

University	Ecole Centrale de Lyon			**Car #**	81	**Part Cost**	$ 2.80
System	Frame and Body	**FileLink1**				**Qty**	1
Assembly	Pedal Assembly	**FileLink2**		**FileLink1**			
Part	Throttle mechanism rocker	**FileLink3**		**FileLink2**		**Extended Cost**	$ 2.80
P/N Base	04019			**FileLink3**			
Suffix	AA						
Details	Rocker for throttle cable mechanism						

ItemOrder	Material	Use	UnitCost	Size1	Unit1	Size2	Unit2	Area Name	Area	Length	Density	Quantity	Sub Total
10	Aluminium, normal (per kg)	Material for pedal bracket	$ 4.20	15	mm	30	mm	Rectangular area 15mm x 30mm	4.50E-04	0.045	2,710.00	1	$ 0.23
												Sub Total	**$ 0.23**

ItemOrder	Process	Use	UnitCost	Unit	Quantity	Multiplier	Mult. Val.	Sub Total
10	Machining Setup, Install and remove	Setup for machining and removal	$ 1.30	unit	1			$ 1.30
20	Machining	Machining - outer profile of one side	$ 0.04	cm^3	6.7	Material - Aluminium	1	$ 0.27
30	Machining Setup, Change	Setup for machining of the opposite side	$ 0.65	unit	1			$ 0.65
40	Machining	Machining - turning of the other end	$ 0.04	cm^3	6.7	Material - Aluminium	1	$ 0.27
50	Drilled holes < 25.4 mm dia.	3 holes for pivots	$ 0.35	hole	3			$ 0.08
							Sub Total	**$ 2.57**

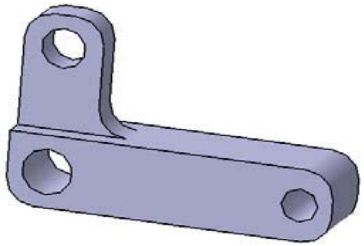

Vue de face
Echelle : 1:1

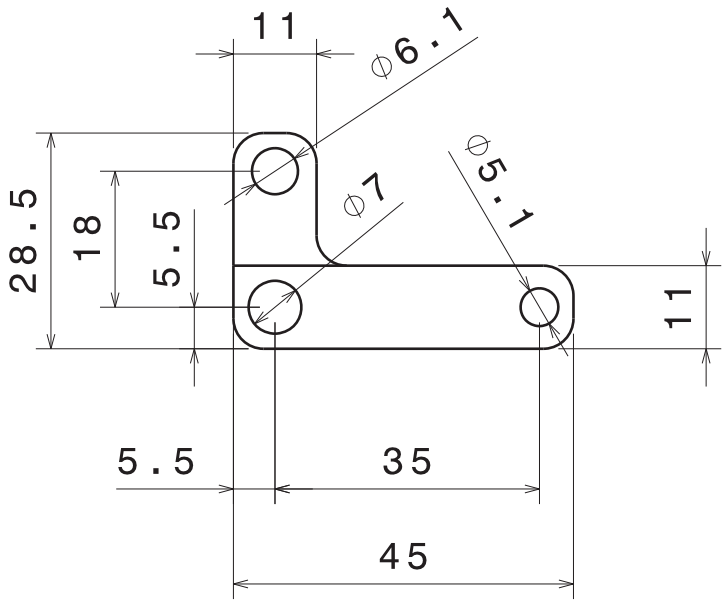

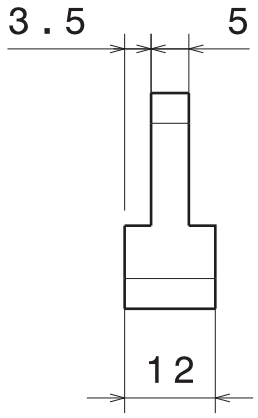

Vue de gauche
Echelle : 1:1

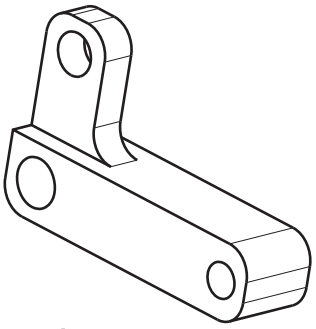

Vue isométrique
Echelle : 1:1

Rayons de congés libres

Tolérances Générales ISO 2768 - mK

Taille A4		Ecurie Piston Sport Auto	
Dessiné par Antoine ROSSÉ	Date 08/12/2013	Désignation Chape liaison mécanisme d'accélérateur	
Coordonnées 06 42 73 37 30 antoine.rosse@ecl2015.ec-lyon.fr		Quantité 1	Matériau Aluminium 2017	Version v1.0
Date de livraison souhaitée 21/01/2014		Echelle 1:1	Numéro du plan 14 B036	Feuille 1/1

University	Ecole Centrale de Lyon			**Car #**	81	**Part Cost**	$ 2.58
System	Frame and Body	**FileLink1**				**Qty**	1
Assembly	Pedal Assembly	**FileLink2**		**FileLink1**			
Part	Throttle cable attachment	**FileLink3**		**FileLink2**		**Extended Cost**	$ 2.58
P/N Base	04020			**FileLink3**			
Suffix	AA						
Details	Connects to end of throttle cable						

ItemOrder	Material	Use	UnitCost	Size1	Unit1	Size2	Unit2	Area Name	Area	Length	Density	Quantity	Sub Total
10	Steel, stainless (per kg)	Material for part	$ 2.25	70	mm	15	mm	Rectangular area 70mm x 15mm	1.05E-03	0.001	2,710.00	1	$ 0.01
												Sub Total	**$ 0.01**

ItemOrder	Process	Use	UnitCost	Unit	Quantity	Multiplier	Mult. Val.	Sub Total
10	Machining Setup, Install and remove	Install and remove part from laser machine	$ 1.30	unit	1			$ 1.30
20	Laser cut	cutout the outline and holes	$ 0.01	cm	20.5	Material - Stainless Steel	3.75	$ 0.77
30	Sheet metal bends	for bends	$ 0.25	bend	2			$ 0.50
							Sub Total	**$ 2.57**

University	Ecole Centrale de Lyon			**Car #**	81	**Part Cost**	$ 2.48
System	Frame and Body	**FileLink1**				**Qty**	1
Assembly	Pedal Assembly	**FileLink2**		**FileLink1**			
Part	Overtravel switch mount	**FileLink3**		**FileLink2**		**Extended Cost**	$ 2.48
P/N Base	04021			**FileLink3**			
Suffix	AA						
Details	Laser cut then bent aluminium plate						

ItemOrder	Material	Use	UnitCost	Size1	Unit1	Size2	Unit2	Area Name	Area	Length	Density	Quantity	Sub Total
10	Aluminium, normal (per kg)	Material for part	$ 4.20	85	mm	62	mm	Rectangular area 85mm x 62mm	5.27E-03	0.002	2,710.00	1	$ 0.12
												Sub Total	**$ 0.12**

ItemOrder	Process	Use	UnitCost	Unit	Quantity	Multiplier	Mult. Val.	Sub Total
10	Machining Setup, Install and remove	Install and remove part from laser machine	$ 1.30	unit	1			$ 1.30
20	Laser cut	cutout the outline and holes	$ 0.01	cm	56.2	Material - Aluminium	1	$ 0.56
30	Sheet metal bends	for edge bends	$ 0.25	bend	2			$ 0.50
							Sub Total	**$ 2.36**

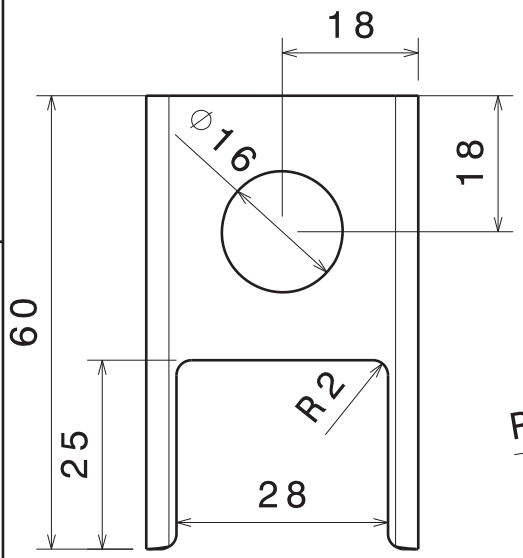

Vue de face
Echelle : 1:1

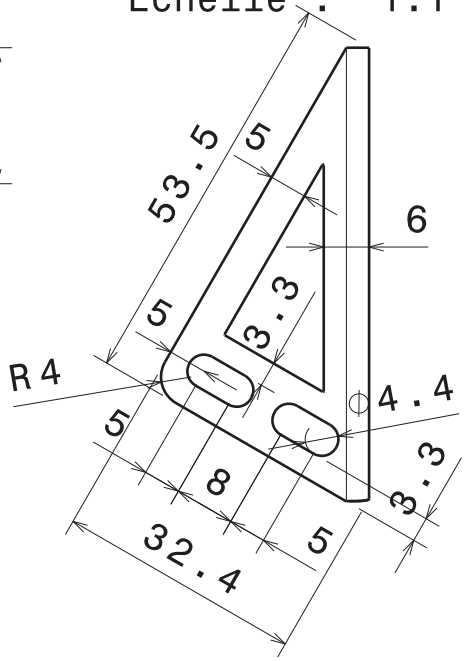

Vue de gauche
Echelle : 1:1

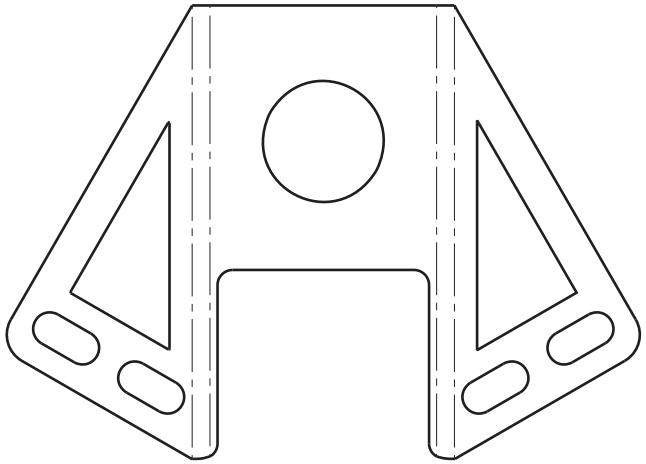

Vue dépliée
Echelle : 1:1

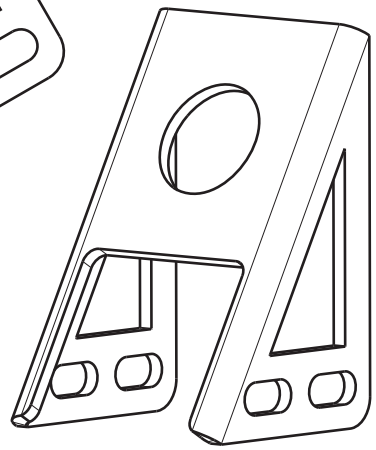

Vue isométrique
Echelle : 1:1

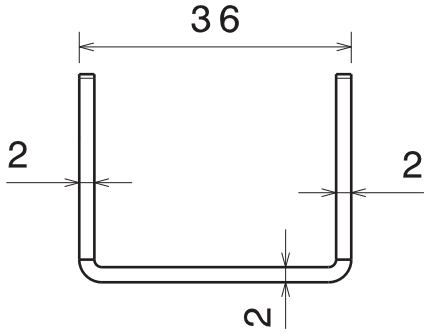

Vue de dessus
Echelle : 1:1

Tolérances générales ISO 2768 - mK

Taille A4		Ecurie Piston Sport Auto
Dessiné par Antoine ROSSÉ	Date 12/11/2013	Désignation Support du "overtravel switch"
Coordonnées 06 42 73 37 30 antoine.rosse@ecl2015.ec-lyon.fr		Quantité 1 / Matériau Aluminium / Version v1.0
Vérifié par	Date	Echelle 1:1 / Numéro du plan 14 M054 / Feuille 1/1

200

University	Ecole Centrale de Lyon			**Car #**	81	**Part Cost**	$ 0.62
System	Frame and Body	**FileLink1**				**Qty**	2
Assembly	Pedal Assembly	**FileLink2**		**FileLink1**			
Part	Plastic spacer	**FileLink3**		**FileLink2**		**Extended Cost**	$ 1.24
P/N Base	04022			**FileLink3**			
Suffix	AA						
Details	Plastic spacers for balance bar						

ItemOrder	Material	Use	UnitCost	Size1	Unit1	Size2	Unit2	Area Name	Area	Length	Density	Quantity	Sub Total
10	Plastic, PVC (per kg)	Plastic Sheet Material for part	$ 3.30	50	mm	50.00	mm	Square area, 50mm sides	2.50E-03	0.002	1,300.00	1	$ 0.02
												Sub Total	**$ 0.02**

ItemOrder	Process	Use	UnitCost	Unit	Quantity	Multiplier	Mult. Val.	Sub Total
10	Cut (scissors, knife)	Cut out spacer shape from plastic sheet	$ 0.06	cm	10			$ 0.60
							Sub Total	**$ 0.60**

University	Ecole Centrale de Lyon
System	Frame and Body
Assembly	Clutch actuation system
P/N Base	A0005
Suffix	AA
Details	Hand-actuated clutch system

Car #	81	**Asm Cost**	$ 105.10
		Qty	1
FileLink1			
FileLink2		**Extended Cost**	$ 105.10
FileLink3			

ItemOrder	Part	Part Cost	Quantity	Sub Total
10	Lever steel mount	$ 5.11	2	$ 10.22
20	Lever mount 2	$ 5.46	1	$ 5.46
30	Articulation elbow	$ 6.32	1	$ 6.32
40	Lever handle	$ 9.56	1	$ 9.56
50	Lever joint	$ 11.77	1	$ 11.77
60	Clutch actuation lever	$ 9.20	1	$ 9.20
70	Handle padding	$ 7.40	1	$ 7.40
			Sub Total	**$ 59.93**

ItemOrder	Material	Use	UnitCost	Size1	Unit1	Size2	Unit2	Area Name	Area	Length	Density	Quantity	Sub Total
10	Cable, Pull	Clutch actuation	$ 15.00		m							1.6	$ 24.00
20	Cable adjuster	Clutch cable	$ 1.00									2	$ 2.00
30	Paint	Steel mounts painting	$ 10.00		m^2							0.006	$ 0.06
												Sub Total	**$ 26.06**

ItemOrder	Process	Use	UnitCost	Unit	Quantity	Multiplier	Mult. Val.	Sub Total
10	Weld	Steel mounts welding on frame	0.15	cm	26		1	$ 3.90
20	Aerosol apply	Steel mounts painting	5.25	m^2	0.006		1	$ 0.03
30	Assemble, 1 kg, Loose	Aluminium mount on steel mount	$ 0.06		1		1	$ 0.06
40	Ratchet <= 6.35 mm	M4 Bolts installation	$ 0.50		4	Engagement Length>4D	1.5	$ 3.00
50	Assemble, 1 kg, Loose	Articulation elbow on aluminium mount	$ 0.06		1		1	$ 0.06
60	Ratchet <= 25.4 mm	M8 bolt installation	$ 0.75		1	Engagement Length>4D	1.5	$ 1.13
70	Ratchet <= 6.35 mm	M6 bolt installation	$ 0.50		1		1	$ 0.50
80	Assemble, 1 kg, Loose	Lever handle on articulation elbow	$ 0.06		1		1	$ 0.06
90	Ratchet <= 25.4 mm	M8 bolt installation	$ 0.75		1	Engagement Length>4D	1.5	$ 1.13
100	Ratchet <= 6.35 mm	M5 bolt installation	$ 0.50		2		1	$ 1.00
110	Assemble, 1 kg, Loose	Lever joint on lever handle	$ 0.06		1		1	$ 0.06
120	Ratchet <= 6.35 mm	M6 bolts installation	$ 0.50		1	Engagement Length>2D	1.25	$ 0.63
130	Assemble, 1 kg, Line on line	Lever joint on lever	$ 0.13		1		1	$ 0.13
140	Ratchet <= 6.35 mm	M6 bolt and nut installation	$ 0.50		1	Engagement Length>4D	1.5	$ 0.75
150	Reaction tool <= 6,35 mm	M6 nut blocking	$ 0.25		1		1	$ 0.25
160	Assemble, 1 kg, Interference	Handle padding on lever handle	$ 0.19		1		1	$ 0.19
170	Assemble, 1 kg, Line on line	Cable on clutch lever	$ 0.13		1		1	$ 0.13
180	Assemble, 1 kg, Interference	Cable on lever joint	$ 0.19		1		1	$ 0.19
190	Assemblr,1kg , Loose	Tie wraps installation	$ 0.06		6		1	$ 0.36
200	Assemble, 1 kg, Interference	Cable on engine	$ 0.19		1		1	$ 0.19
210	Wrench <= 25,4 mm	M8 nuts installation	$ 1.50		2		1	$ 3.00
							Sub Total	**$ 16.74**

ItemOrder	Fastener	Use	UnitCost	Size1	Unit1	Size2	Unit2	Quantity	Sub Total
10	Bolt, Grade 8.8 (SAE 5)	Lever steel mount on lever aluminium mount	0.03	4	mm	25	mm	4	$ 0.12
20	Bolt, Grade 8.8 (SAE 5)	Articulation elbow on handle and aluminium mount	0.14	8	mm	35	mm	2	$ 0.28
30	Bolt, Grade 8.8 (SAE 5)	Articulation elbow on lever aluminium mount	0.03	6	mm	10	mm	1	$ 0.03
40	Bolt, Grade 8.8 (SAE 5)	Articulation elbow on lever handle	0.02	5	mm	6	mm	2	$ 0.04
50	Bolt, Grade 8.8 (SAE 5)	Lever joint on lever	0.08	6	mm	35	mm	1	$ 0.08
60	Bolt, Grade 8.8 (SAE 5)	Lever handle on lever joint	0.04	6	mm	20	mm	1	$ 0.04
70	Washer, Grade 8.8 (SAE 5)	Articulation elbow on handle and aluminium mount	0.01	8	mm			2	$ 0.02
80	Washer, Grade 8.8 (SAE 5)	Lever joint on lever and lever handle	0.01	6	mm			1	$ 0.01
90	Washer, Grade 8.8 (SAE 5)	Lever steel mount on lever aluminium mount	0.01	4	mm			4	$ 0.04
100	Nut, Grade 8.8 (SAE 5)	Lever joint on lever	0.03	6	mm			2	$ 0.06
110	Nut, Grade 8.8 (SAE 5)	Clutch cable on engine	0.04	8	mm			2	$ 0.08
120	Tie Wrap	Cable support	$ 0.04					6	$ 0.24
								Sub Total	**$ 1.04**

ItemOrder	Tooling	Use	UnitCost	Unit	Quantity	PVF	FractionIncluded	Sub Total
10	Welds-Welding Fixture	Steel mounts welding on frame	$ 500.00	point	8	3000	1	$ 1.33
							Sub Total	**$ 1.33**

University	Ecole Centrale de Lyon			**Car #**	81	**Part Cost**	$ 5.11
System	Frame and Body	**FileLink1**				**Qty**	2
Assembly	Clutch	**FileLink2**		**FileLink1**			
Part	Lever steel mount	**FileLink3**		**FileLink2**		**Extended Cost**	$ 10.22
P/N Base	05001			**FileLink3**			
Suffix	AA						
Details							

ItemOrder	Material	Use	UnitCost	Size1	Unit1	Size2	Unit2	Area Name	Area	Length	Density	Quantity	Sub Total
10	Steel, Mild	Material for part	$ 2.25	0.032	m	0.025	m	Rectangular 32mm x 25 mm	0.0008	0.019	7,860.00	1	$ 0.27
												Sub Total	**$ 0.27**

ItemOrder	Process	Use	UnitCost	Unit	Quantity	Multiplier	Mult. Val.	Sub Total
10	Machining Setup, Install and remove		$ 1.30		1			$ 1.30
20	Machining	Main shape contouring	$ 0.04	cm^3	5.9	Material - Steel	3	$ 0.71
30	Machining Setup, Change		$ 0.65	unit	1			$ 0.65
40	Machining	Central groove machining	$ 0.04	cm^3	4.2	Material - Steel	3	$ 0.50
50	Drilled holes < 25.4 mm dia.	Aluminium mount mounting holes	$ 0.35	hole	4			$ 1.40
60	Threading, Internal		$ 0.10	cm	2.8			$ 0.28
							Sub Total	**$ 4.84**

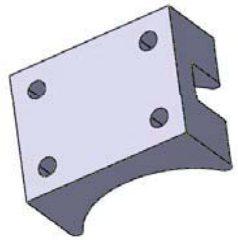

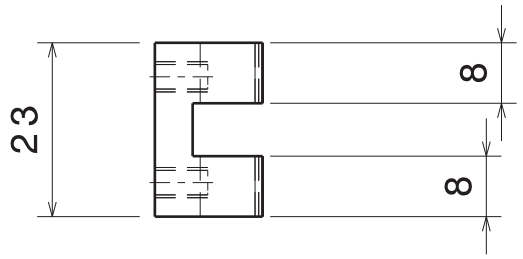

Vue de dessous
Echelle : 1:1

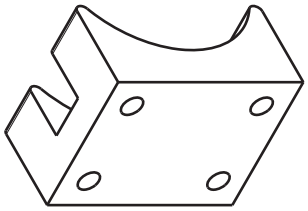

Vue isométrique
Echelle : 1:1

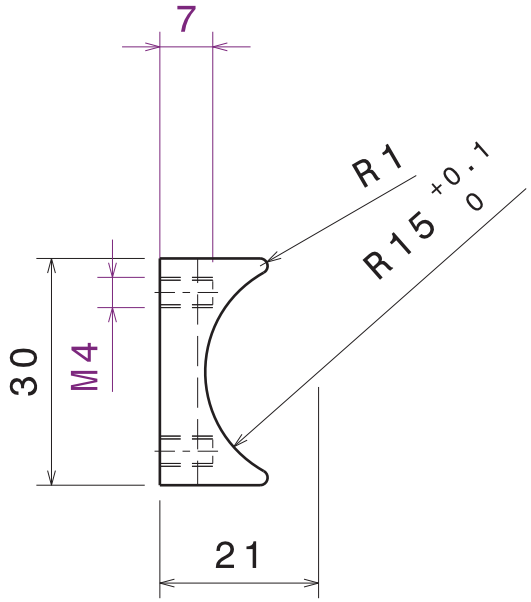

Vue de face
Echelle : 1:1

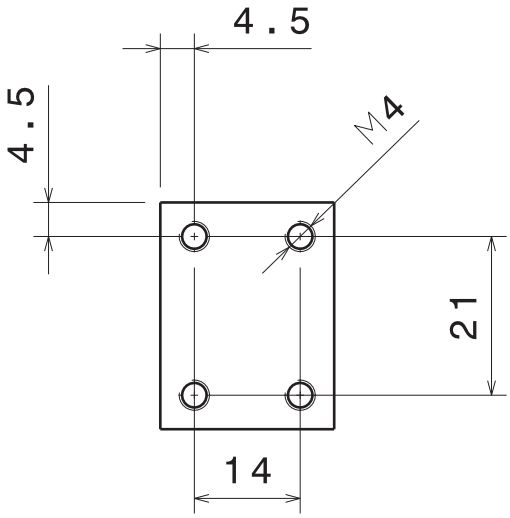

Vue de gauche
Echelle : 1:1

Tolérances générales ISO 2768-mK

Casser les angles vifs

Taille A4		Ecurie Piston Sport Auto
Dessiné par Clément BOURQUARD	Date 12/11/2013	Désignation: Chape levier acier
Coordonnées 06 33 03 95 75 clement.bourquard@ecl2015.ec-lyon.fr		Quantité 2 / Matériau Acier S235 / Version v1.0
Vérifié par	Date	Echelle 1:1 / Numéro du plan 14B015 / Feuille 1/1

University	Ecole Centrale de Lyon			**Car #**	81	**Part Cost**	$ 5.46
System	Frame and Body	**FileLink1**				**Qty**	1
Assembly	Ecole Centrale de Lyon	**FileLink2**		**FileLink1**			
Part	Lever mount 2	**FileLink3**		**FileLink2**		**Extended Cost**	$ 5.46
P/N Base	05002			**FileLink3**			
Suffix	AA						
Details							

ItemOrder	Material	Use	UnitCost	Size1	Unit1	Size2	Unit2	Area Name	Area	Length	Density	Quantity	Sub Total
10	Steel, Mild	Material for part	$ 2.25	0.032	m	0.025	m	Rectangular 32mm x 25 mm	0.0008	0.022	7,860.00	1	$ 0.31
												Sub Total	**$ 0.31**

ItemOrder	Process	Use	UnitCost	Unit	Quantity	Multiplier	Mult. Val.	Sub Total
10	Machining Setup, Install and remove		$ 1.30		1			$ 1.30
20	Machining	Main shape contouring	$ 0.04	cm^3	5.1	Material - Steel	3	$ 0.61
30	Machining Setup, Change		$ 0.65	unit	1			$ 0.65
40	Machining	Main hole machining	$ 0.04	cm^3	3.2	Material - Steel	3	$ 0.38
50	Drilled holes < 25.4 mm dia.		$ 0.35	hole	6			$ 2.10
60	Threading, Internal (machining)		$ 0.10	cm	1			$ 0.10
							Sub Total	**$ 5.15**

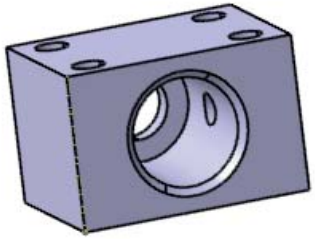

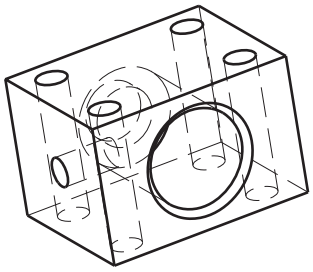

Vue isométrique
Echelle : 1:1

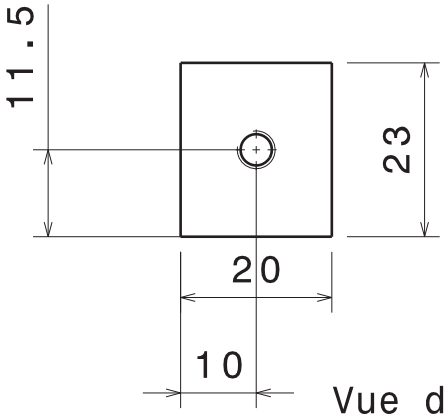

Vue de dessous
Echelle : 1:1

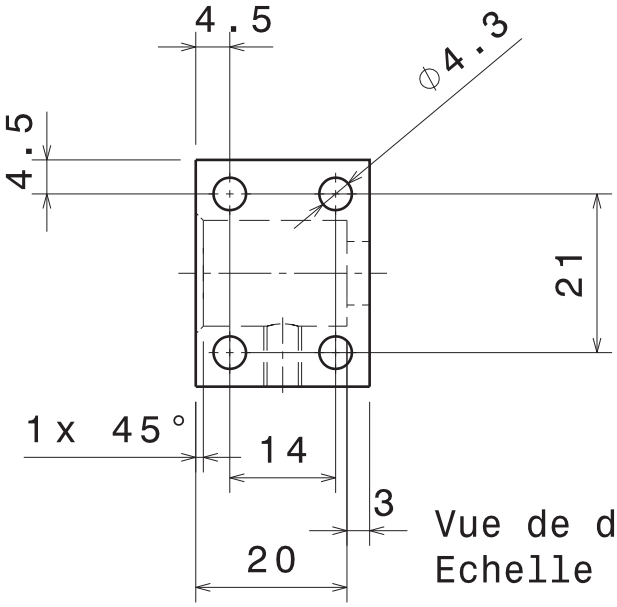

Vue de droite
Echelle : 1:1

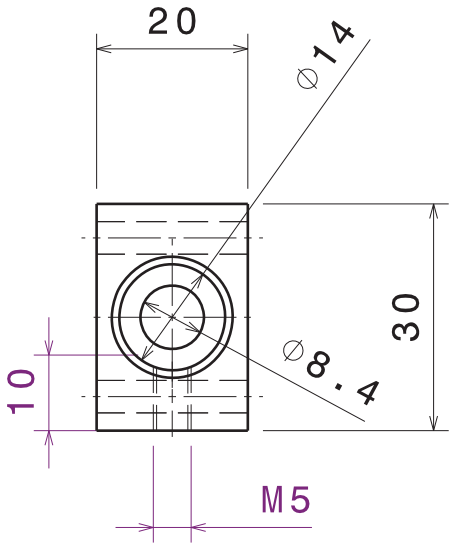

Vue de face
Echelle : 1:1

Tolérances générales ISO 2768-mK

Casser les angles vifs

Taille A4		Ecurie Piston Sport Auto	
Dessiné par Clément BOURQUARD	Date 12/11/2013	Désignation Chape levier aluminium	
Coordonnées 06 33 03 95 75 clement.bourquard@ecl2015.ec-lyon.fr		Quantité 1	Matériau Aluminium 2017	Version v1.0
Vérifié par	Date	Echelle 1:1	Numéro du plan 14B054	Feuille 1/1

University	Ecole Centrale de Lyon			**Car #**	81	**Part Cost**	$ 6.32
System	Frame and Body	**FileLink1**				**Qty**	1
Assembly	Clutch	**FileLink2**		**FileLink1**			
Part	Articulation elbow	**FileLink3**		**FileLink2**		**Extended Cost**	$ 6.32
P/N Base	05003			**FileLink3**			
Suffix	AA						
Details							

ItemOrder	Material	Use	UnitCost	Size1	Unit1	Size2	Unit2	Area Name	Area	Length	Density	Quantity	Sub Total
10	Aluminum, Normal	Material for part	$ 4.20	0.05	m	0.05	m	Rectangular 50 mm x 50 mm	0.0025	0.018	2,710.00	1	$ 0.51
												Sub Total	**$ 0.51**

ItemOrder	Process	Use	UnitCost	Unit	Quantity	Multiplier	Mult. Val.	Sub Total
10	Machining Setup, Install and remove		$ 1.30		1			$ 1.30
20	Machining	Main shape contouring	$ 0.04		24.5	Material - Aluminium	1	$ 0.98
30	Machining Setup, Install and remove		$ 1.30	unit	1			$ 1.30
40	Machining	First cylindrical shape machining	$ 0.04	cm^3	2.5	Material - Aluminium	1	$ 0.10
50	Drilled holes < 25.4 mm dia.		$ 0.35	hole	1			$ 0.35
60	Threading, Internal (machining)		$ 0.10	cm	3.4			$ 0.34
70	Machining Setup, Change		$ 0.65	unit	1			$ 0.65
80	Machining	Second cylindrical shape machining	$ 0.04	cm^3	2.5	Material - Aluminium	1	$ 0.10
90	Drilled holes < 25.4 mm dia.		$ 0.35	hole	1			$ 0.35
100	Threading, Internal (machining)		$ 0.10	cm	3.4			$ 0.34
							Sub Total	**$ 5.81**

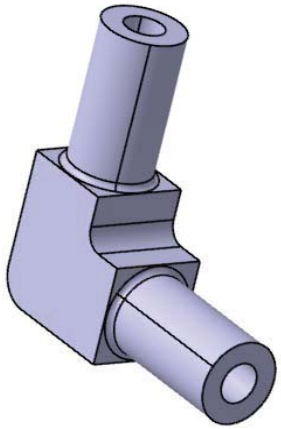

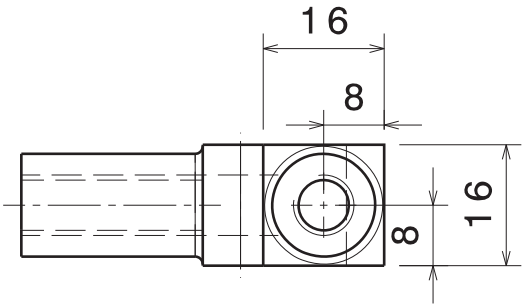

Vue de dessous
Echelle : 1:1

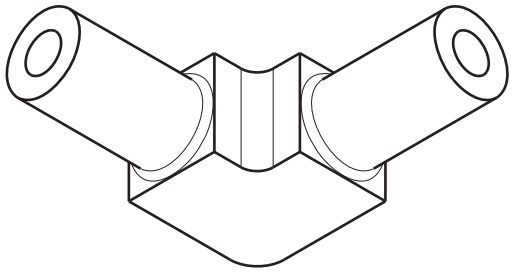

Vue isométrique
Echelle : 1:1

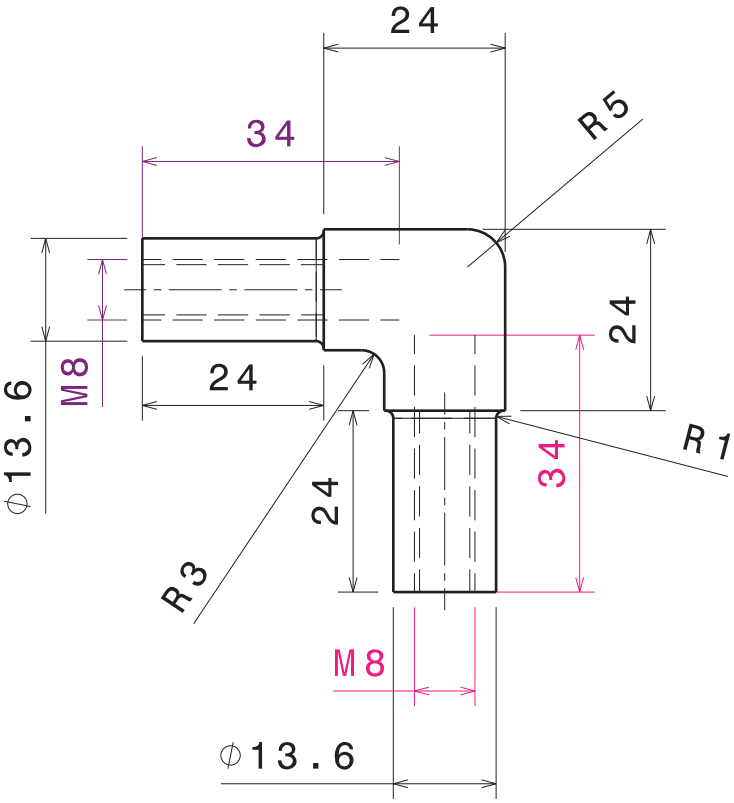

Vue de face
Echelle : 1:1

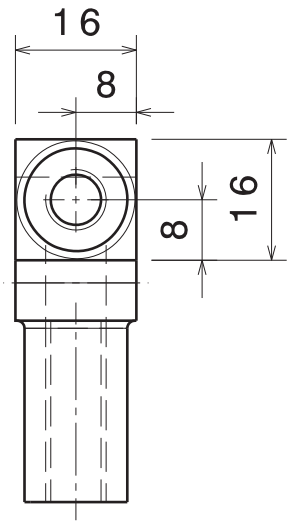

Vue de gauche
Echelle : 1:1

Tolérances générales ISO 2768-mK Casser les angles vifs

Taille A4		Ecurie Piston Sport Auto	
Dessiné par Clément BOURQUARD	Date 16/11/2013	Désignation Coude d'articulation	
Coordonnées 06 33 03 95 75 clement.bourquard@ecl2015.ec-lyon.fr		Quantité 1	Matériau Aluminium 2017	Version v1.0
Vérifié par	Date	Echelle 1:1	Numéro du plan 14B041	Feuille 1/1

University	Ecole Centrale de Lyon			**Car #**	81	**Part Cost**	$ 9.56
System	Frame and Body	**FileLink1**				**Qty**	1
Assembly	Clutch	**FileLink2**		**FileLink1**			
Part	Lever handle	**FileLink3**		**FileLink2**		**Extended Cost**	$ 9.56
P/N Base	05004			**FileLink3**			
Suffix	AA						
Details							

ItemOrder	Material	Use	UnitCost	Size1	Unit1	Size2	Unit2	Area Name	Area	Length	Density	Quantity	Sub Total
10	Aluminum, Normal	Material for part	$ 4.20	0.025	m			Disc Ø 25 mm	0.000491	0.227	2,710.00	1	$ 1.27
												Sub Total	**$ 1.27**

ItemOrder	Process	Use	UnitCost	Unit	Quantity	Multiplier	Mult. Val.	Sub Total
10	Machining Setup, Install and remove		$ 1.30		1			$ 1.30
20	Machining	Main shape contouring	$ 0.04	cm^3	22.9	Material - Aluminium	1	$ 0.92
30	Machining Setup, Change		$ 0.65	unit	1			$ 0.65
40	Machining	Articulation elbow receiving hole	$ 0.04	cm^3	3.1	Material - Aluminium	1	$ 0.12
50	Machining Setup, Install and remove		$ 1.30	unit	1			$ 1.30
60	Machining	Cylindre machining	$ 0.04	cm^3	30.1	Material - Aluminium	1	$ 1.20
70	Machining	Cylindre machining	$ 0.04	cm^3	50.9	Material - Aluminium	1	$ 2.04
80	Drilled holes < 25.4 mm dia.		$ 0.35	hole	2			$ 0.70
90	Threading, Internal (machining)		$ 0.10	cm	0.6			$ 0.06
							Sub Total	**$ 8.29**

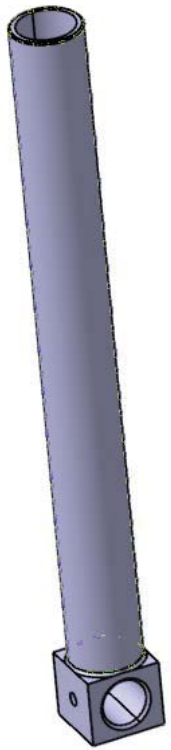

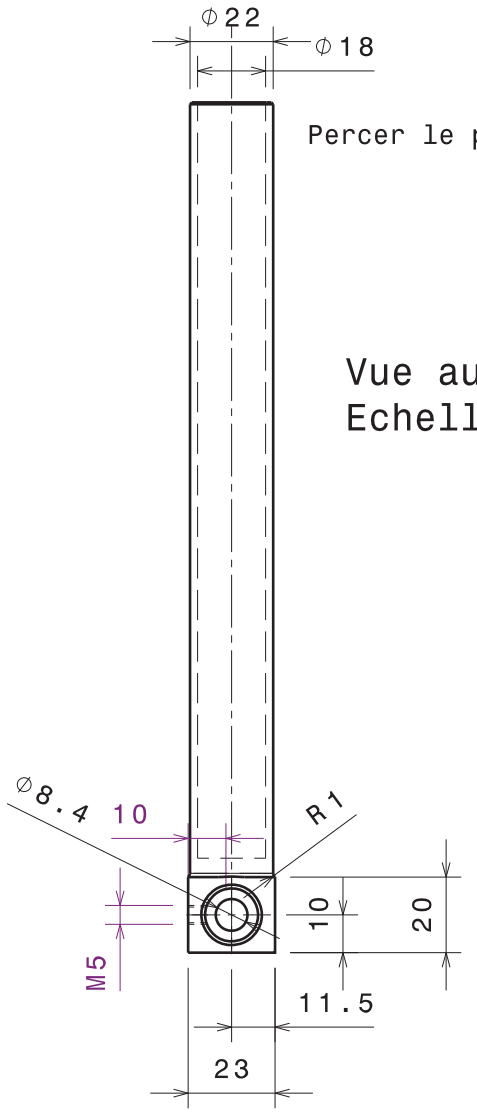

Vue auxiliaire A
Echelle : 1:2

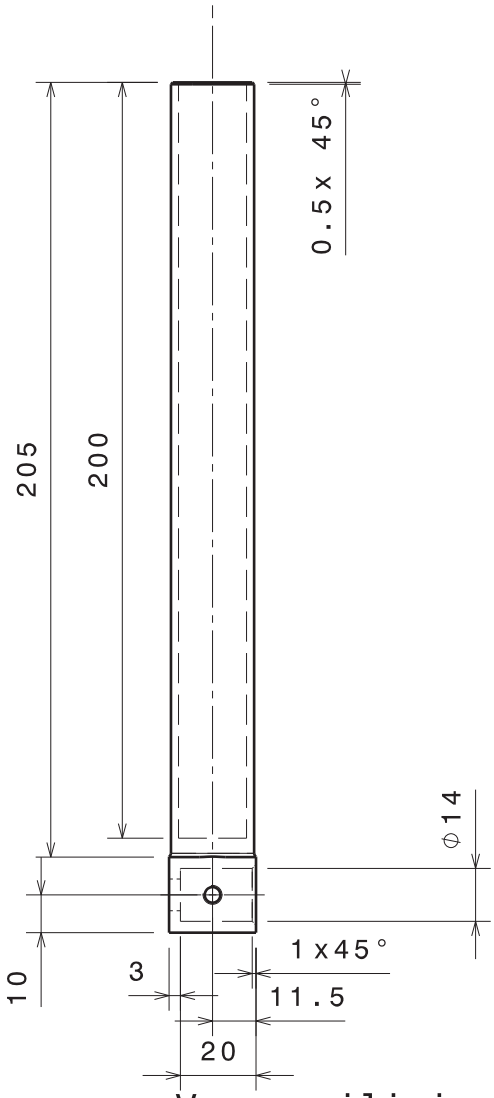

Vue auxiliaire B
Echelle : 1:2

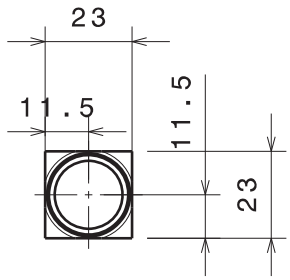

Vue auxiliaire C
Echelle : 1:2

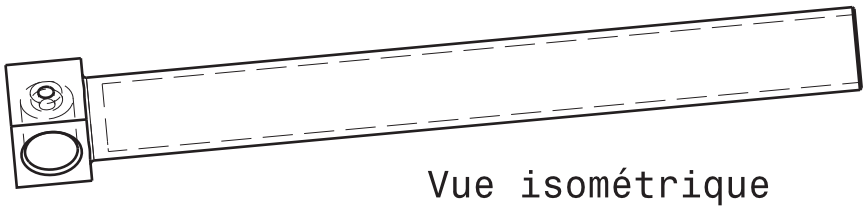

Vue isométrique
Echelle : 1:2

Casser les angles vifs
Tolérances générales ISO 2768-mK

Taille A4		Ecurie Piston Sport Auto	
Dessiné par Clément BOURQUARD	Date 16/11/2013	Désignation Levier d'embrayage	
Coordonnées 06 33 03 95 75 clement.bourquard@ecl2015.ec-lyon.fr		Quantité 1	Matériau Aluminium 2017	Version v1.0
Vérifié par	Date	Echelle 1:2	Numéro du plan 14B053	Feuille 1/1

University	Ecole Centrale de Lyon			**Car #**	81	**Part Cost**	$ 11.77
System	Frame and Body	**FileLink1**				**Qty**	1
Assembly	Clutch	**FileLink2**		**FileLink1**			
Part	Lever joint	**FileLink3**		**FileLink2**		**Extended Cost**	$ 11.77
P/N Base	05005			**FileLink3**			
Suffix	AA						
Details	This part was taken on a damaged motorcycle, but cost as made						

ItemOrder	Material	Use	UnitCost	Size1	Unit1	Size2	Unit2	Area Name	Area	Length	Density	Quantity	Sub Total
10	Steel, Mild	Material for part	$ 2.25	0.25	kg						7,860.00	1	$ 0.56
												Sub Total	**$ 0.56**

ItemOrder	Process	Use	UnitCost	Unit	Quantity	Multiplier	Mult. Val.	Sub Total
10	Die casting	Body shape	4	kg	0.25			$ 1.00
20	Machining Setup, Install and remove		$ 1.30		1			$ 1.30
30	Machining	Main shape finish	$ 0.04	cm^3	6	Material - Steel	3	$ 0.72
40	Machining Setup, Change		$ 0.65	unit	1			$ 0.65
50	Machining	Collar finish	$ 0.04	cm^3	0.6	Material - Steel	3	$ 0.07
60	Drilled holes < 25.4 mm dia.	Axle holes	$ 0.35	hole	2			$ 0.70
70	Threading, Internal		$ 0.10	cm	1			$ 0.10
							Sub Total	**$ 4.54**

ItemOrder	Tooling	Use	UnitCost	Unit	Quantity	PVF	FractionInclud	Sub Total
10	Die casting -Die	Body shape	$ 10,000.00	die	2	3000	1	$ 6.67
							Sub Total	**$ 6.67**

University	Ecole Centrale de Lyon			**Car #**	81	**Part Cost**	$ 9.20
System	Frame and Body	**FileLink1**				**Qty**	1
Assembly	Clutch	**FileLink2**		**FileLink1**			
Part	Actuation lever	**FileLink3**		**FileLink2**		**Extended Cost**	$ 9.20
P/N Base	05006			**FileLink3**			
Suffix	AA						
Details	Bought part, cost as made						

ItemOrder	Material	Use	UnitCost	Size1	Unit1	Size2	Unit2	Area Name	Area	Length	Density	Quantity	Sub Total
10	Aluminum, Normal	Material for part	$ 4.20	0.15	kg				-		2,710.00	1	$ 0.63
												Sub Total	**$ 0.63**

ItemOrder	Process	Use	UnitCost	Unit	Quantity	Multiplier	Mult. Val.	Sub Total
10	Die casting	Lever casting	4	kg	0.15			$ 0.60
20	Machining Setup, Install and remove		$ 1.30		1			$ 1.30
30	Machining		$ 0.04	cm^3	6.3	Material - Aluminium	1	$ 0.25
40	Drilled holes < 25.4 mm dia.	Axle hole	$ 0.35	hole	1			$ 0.35
							Sub Total	**$ 1.90**

ItemOrder	Tooling	Use	UnitCost	Unit	Quantity	PVF	FractionIncluded	Sub Total
10	Die casting -Die	Lever casting	$ 10,000.00	die	2	3000	1	$ 6.67
							Sub Total	**$ 6.67**

University	Ecole Centrale de Lyon			**Car #**	81	**Part Cost**	$ 7.40
System	Frame and Body	**FileLink1**				**Qty**	1
Assembly	Clutch	**FileLink2**		**FileLink1**			
Part	Handle padding	**FileLink3**		**FileLink2**		**Extended Cost**	$ 7.40
P/N Base	05007			**FileLink3**			
Suffix	AA						
Details	Bought part, cost as made						

ItemOrder	Material	Use	UnitCost	Size1	Unit1	Size2	Unit2	Area Name	Area	Length	Density	Quantity	Sub Total
10	Rubber		$ 3.30	0.1	kg				-		900.00	1	$ 0.33
												Sub Total	**$ 0.33**

ItemOrder	Process	Use	UnitCost	Unit	Quantity	Multiplier	Mult. Val.	Sub Total
10	Die casting	Padding casting	$ 4.00	kg	0.1			$ 0.40
							Sub Total	**$ 0.40**

ItemOrder	Tooling	Use	UnitCost	Unit	Quantity	PVF	FractionIncluded	Sub Total
10	Die casting -Die	Padding casting	$ 10,000.00	die	2	3000	1	$ 6.67
							Sub Total	**$ 6.67**

University	Ecole Centrale de Lyon	Car #	81	Asm Cost	$ 442.10
System	Frame and Body			Qty	1
Assembly	Shifter	FileLink1			
P/N Base	A0006	FileLink2		Extended Cost	$ 442.10
Suffix	AA	FileLink3			
Details	The gearshifting system relies on a solenoid. The linkage with the pilot is therefore made by the electrical harness.				

ItemOrder	Part	Part Cost	Quantity	Sub Total
10	Proshift gearshifting actuator	$ 375.00	1	$ 375.00
20	Actuator right steel mount	$ 5.60	1	$ 5.60
30	Actuator right aluminium mount	$ 10.33	1	$ 10.33
40	Actuator left steel mount	$ 9.02	1	$ 9.02
50	Actuator left aluminium mount	$ 3.00	1	$ 3.00
60	Right half-collar	$ 4.17	1	$ 4.17
70	Left half-collar	$ 4.29	1	$ 4.29
80	Gearshift lever	$ 7.25	1	$ 7.25
			Sub Total	$ 418.66

ItemOrder	Material	Use	UnitCost	Size1	Unit1	Size2	Unit2	Area Name	Area	Length	Density	Quantity	Sub Total
10	Rod End, Industrial	Bearing between the actuator and the lever	$ 1.94	6	mm							1	$ 1.94
20	Paint	Steel mounts painting	$ 10.00		m^2							0.01	$ 0.10
												Sub Total	$ 2.04

ItemOrder	Process	Use	UnitCost	Unit	Quantity	Multiplier	Mult. Val.	Sub Total
10	Weld	Steel mounts welding on frame	$ 0.15	cm	26		1	$ 3.90
20	Aerosol apply	Steel mounts painting	$ 5.25	m^2	0.01		1	$ 0.05
30	Assemble, 1 kg, Loose	Aluminium mounts on steel mounts	$ 0.06	unit	2		1	$ 0.12
40	Ratchet <= 6.35 mm	M4 bolts installation	$ 0.50	unit	8		1	$ 4.00
50	Assemble, 1 kg, Loose	Half-collars mounts on aluminium mounts	$ 0.06	unit	2		1	$ 0.12
60	Ratchet <= 25.4 mm	M8 bolts installation	$ 0.75	unit	2		1	$ 1.50
70	Wrench <= 25,4 mm	M8 nuts installation	$ 1.50	unit	3		1	$ 4.50
80	Reaction tool <= 25,4 mm	M8 nuts installation	$ 0.25	unit	3		1	$ 0.75
90	Assemble, 3 kg, Line on line	Gearshifter installation	$ 0.38	unit	1		1	$ 0.38
100	Ratchet <= 6.35 mm	M5 bolts installation	$ 0.50	unit	2		1	$ 1.00
110	Assemble, 1 kg, Line on line	Rod end bearing on gearshifter	$ 0.13	unit	1		1	$ 0.13
120	Hand, Loose <=6,35 mm	Rod end installation	$ 0.25	unit	1		1	$ 0.25
130	Wrench <= 6.35 mm	M6 nut installation	$ 1.00	unit	1		1	$ 1.00
140	Assemble, 1 kg, Loose	Gearshift lever on rod end bearing	$ 0.06	unit	1		1	$ 0.06
150	Ratchet <= 6.35 mm	M6 bolt installation	$ 0.50	unit	1		1	$ 0.50
160	Reaction tool<=6,35mm	M6 nut blocking	$ 0.25	unit	1		1	$ 0.25
170	Assemble, 1 kg, Line on line	Gearshiter lever on engine gearshifting shaft	$ 0.13	unit	1		1	$ 0.13
180	Ratchet <= 6.35 mm	M6 bolt installation	$ 0.50	unit	1		1	$ 0.50
							Sub Total	$ 19.14

ItemOrder	Fastener	Use	UnitCost	Size1	Unit1	Size2	Unit2	Quantity	Sub Total
10	Bolt, Grade 8.8 (SAE 5)	Half-collars on Actuator aluminium mounts	$ 0.16	8	mm	40	mm	2	$ 0.32
20	Bolt, Grade 8.8 (SAE 5)	Rod end bearing on Gearshift lever	$ 0.05	6	mm	25	mm	1	$ 0.05
30	Bolt, Grade 8.8 (SAE 5)	Right half-collar on Left half-collar	$ 0.04	5	mm	25	mm	2	$ 0.08
40	Bolt, Grade 8.8 (SAE 5)	Gearshift lever on Engine gearshifting shaft	$ 0.04	6	mm	16	mm	1	$ 0.04
50	Bolt, Grade 8.8 (SAE 5)	Actuator aluminium mounts on Actuator steel mounts	$ 0.02	4	mm	12	mm	8	$ 0.16
60	Washer, Grade 8.8 (SAE 5)	Half-collars on Actuator aluminium mounts	$ 0.01	8	mm			5	$ 0.05
70	Nut, Grade 8.8 (SAE 5)	Half-collars on Actuator aluminium mounts	$ 0.04	8	mm			4	$ 0.16
80	Nut, Grade 8.8 (SAE 5)	Rod end bearing on Gearshift lever	$ 0.03	6	mm			2	$ 0.06
								Sub Total	**$ 0.92**

ItemOrder	Tooling	Use	UnitCost	Unit	Quantity	PVF	FractionIncluded	Sub Total
10	Welds - Welding Fixture	Steel mounts welding on frame	$ 500.00	point	8	3000	1	$ 1.33
							Sub Total	**$ 1.33**

University	Ecole Centrale de Lyon			**Car #**	81	**Part Cost**	$ 375.00
System	Frame and Body	**FileLink1**				**Qty**	1
Assembly	Shifter	**FileLink2**		**FileLink1**			
Part	Proshift gearshifting actuator	**FileLink3**		**FileLink2**		**Extended Cost**	$ 375.00
P/N Base	06001			**FileLink3**			
Suffix	AA						
Details	Gearshifting actuator bought in a kit and closest in dimensions, functionalities and fonctions to the pingel easy shift kit						

ItemOrder	Material	Use	UnitCost	Size1	Unit1	Size2	Unit2	Area Name	Area	Length	Density	Quantity	Sub Total
10	Shifter, Automatic, Pingel Easy Shift Kit	Gearshifting actuation (the pingel easy shift kit is the closest gearshifting system to the Proshift PSU gearshifting kit)	$ 375.00									1	$ 375.00
												Sub Total	**$ 375.00**

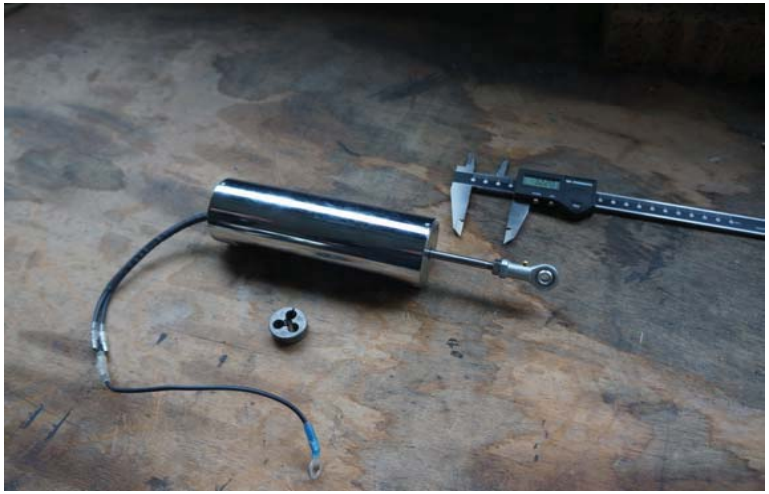

University	Ecole Centrale de Lyon			**Car #**	81	**Part Cost**	$ 5.60
System	Frame and Body	**FileLink1**				**Qty**	1
Assembly	Shifter	**FileLink2**		**FileLink1**			
Part	Actuator right steel mount	**FileLink3**		**FileLink2**		**Extended Cost**	$ 5.60
P/N Base	06002			**FileLink3**			
Suffix	AA						
Details							

ItemOrder	Material	Use	UnitCost	Size1	Unit1	Size2	Unit2	Area Name	Area	Length	Density	Quantity	Sub Total
10	Steel, Mild	Material for part	$ 2.25	0.032	m	0.032	m	Rectangular 32 mm x 32 mm	0.001024	0.019	7,860.00	1	$ 0.34
												Sub Total	**$ 0.34**

ItemOrder	Process	Use	UnitCost	Unit	Quantity	Multiplier	Mult. Val.	Sub Total
10	Machining Setup, Install and remove		$ 1.30		1			$ 1.30
20	Machining	Main shape contouring	$ 0.04	cm^3	9.8	Material - Steel	3	$ 1.18
30	Machining Setup Change		$ 0.65	unit	1			$ 0.65
40	Machining	Central groove machinig	$ 0.04	cm^3	3.4	Material - Steel	3	$ 0.41
50	Drilled holes < 25.4 mm dia.	Aluminium right mount fixating holes	$ 0.35	hole	4			$ 1.40
60	Threading, Internal (machining)	Holes threading	$ 0.10	cm	3.2			$ 0.32
							Sub Total	**$ 5.25**

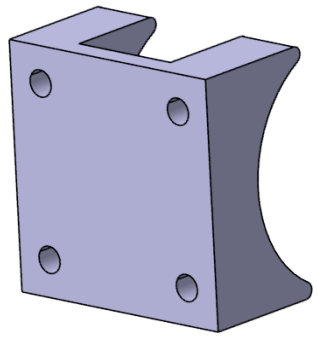

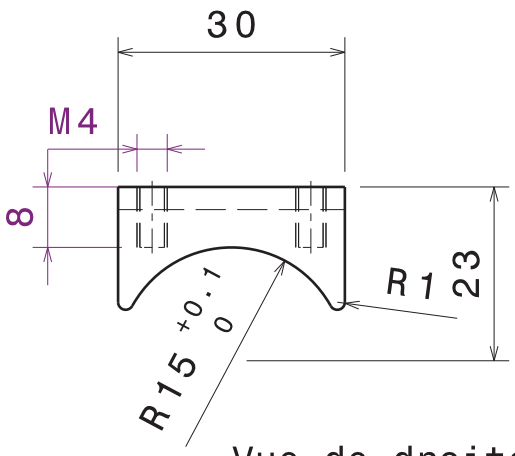

Vue de droite
Echelle : 1:1

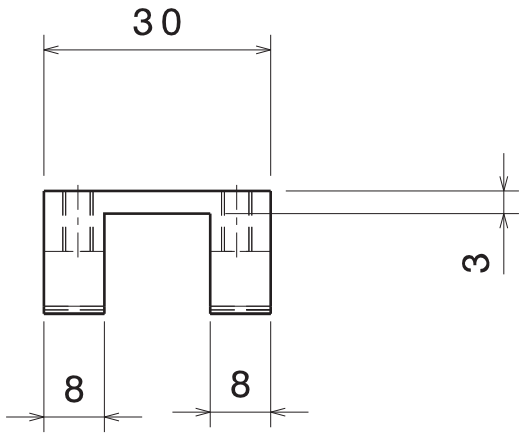

Vue de face
Echelle : 1:1

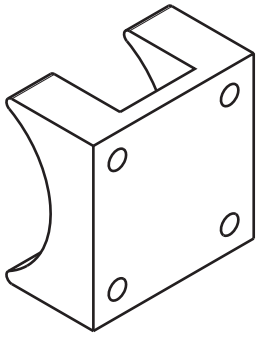

Vue isométrique
Echelle : 1:1

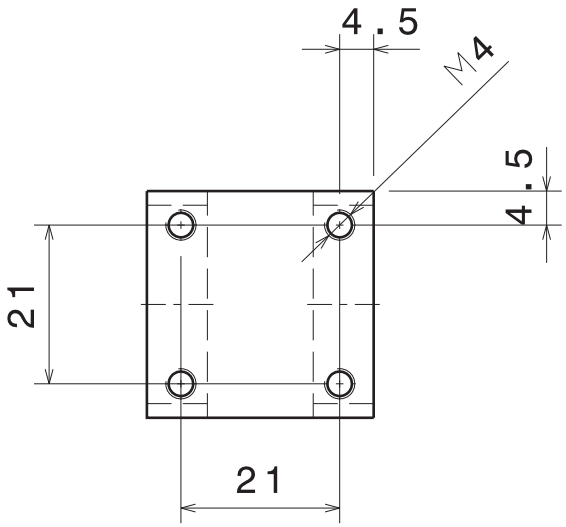

Vue de dessus
Echelle : 1:1

Tolérances générales ISO 2768-mK Casser les angles vifs

Taille A4		Ecurie Piston Sport Auto
Dessiné par Clément BOURQUARD	Date 12/11/2013	Désignation: Chape vérin droite acier
Coordonnées 06 33 03 95 75 clement.bourquard@ecl2015.ec-lyon.fr		Quantité 1 / Matériau Acier S235 / Version v1.0
Vérifié par	Date	Echelle 1:1 / Numéro du plan 14B014 / Feuille 1/1

University	Ecole Centrale de Lyon			**Car #**	81	**Part Cost**	$ 10.33
System	Frame and Body	**FileLink1**				**Qty**	1
Assembly	Shifter	**FileLink2**		**FileLink1**			
Part	Actuator right aluminium mount	**FileLink3**		**FileLink2**		**Extended Cost**	$ 10.33
P/N Base	06003			**FileLink3**			
Suffix	AA						
Details							

ItemOrder	Material	Use	UnitCost	Size1	Unit1	Size2	Unit2	Area Name	Area	Length	Density	Quantity	Sub Total
10	Aluminum, Normal	Material for part	$ 4.20	0.032	m	0.032	m	Rectangular 32 mm x 32 mm	0.001024	0.15	2,710.00	1	$ 1.71
												Sub Total	**$ 1.71**

ItemOrder	Process	Use	UnitCost	Unit	Quantity	Multiplier	Mult. Val.	Sub Total
10	Machining Setup, Install and remove		$ 1.30		1			$ 1.30
20	Machining	Main shape contouring and hollowing out	$ 0.04	cm^3	63.6	Material - Aluminium	1	$ 2.54
30	Drilled holes < 25.4 mm dia.	Axle supporting hole	$ 0.35	hole	1			$ 0.35
40	Machining Setup, Change		$ 0.65	unit	1			$ 0.65
50	Machining	Reduction in thickness in the	$ 0.04	cm^3	59.4	Material - Aluminium	1	$ 2.38
60	Drilled holes < 25.4 mm dia.	Mounting holes	$ 0.35	hole	4			$ 1.40
							Sub Total	**$ 8.62**

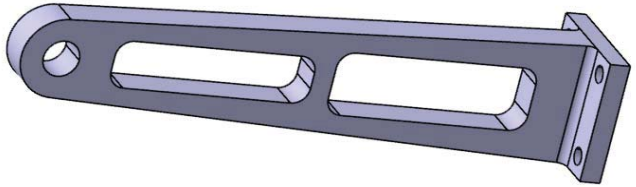

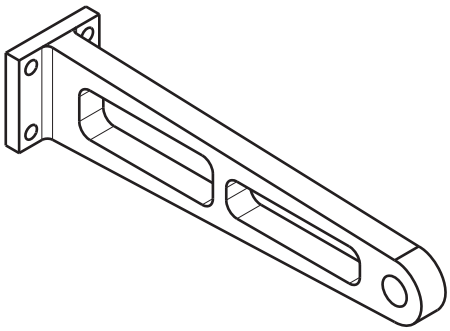

Vue isométrique
Echelle : 1:2

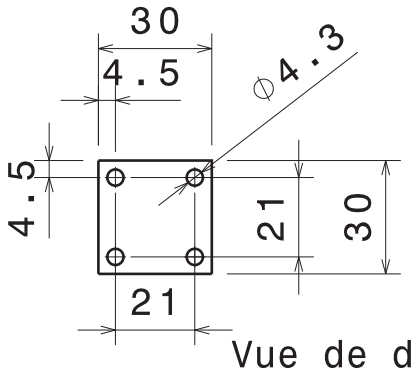

Vue de dessous
Echelle : 1:2

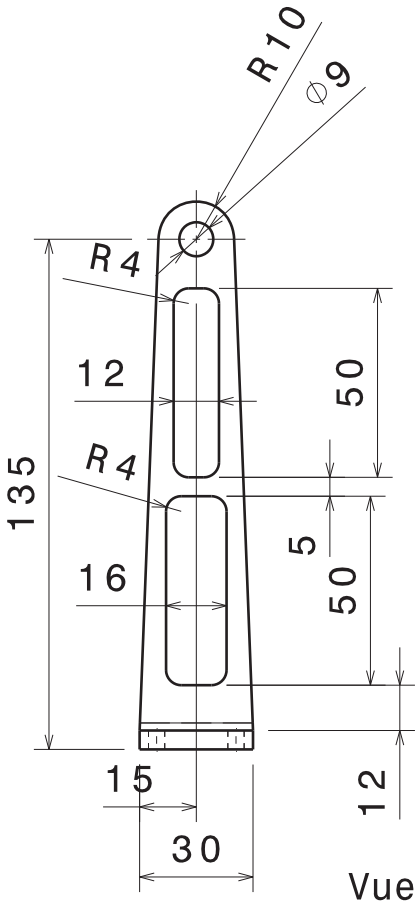

Vue de droite
Echelle : 1:2

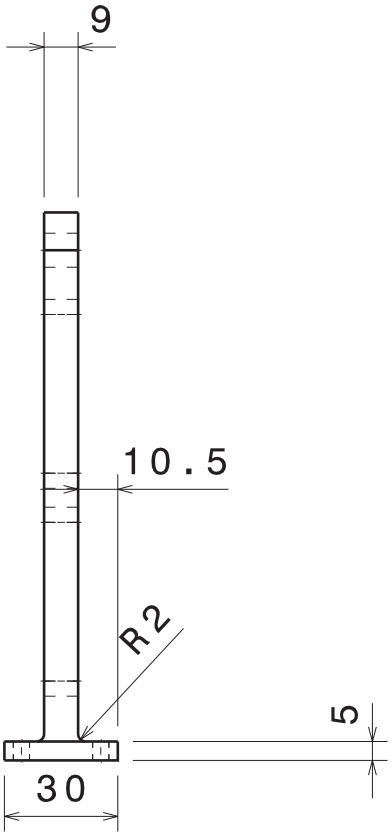

Vue de face
Echelle : 1:2

Tolérances générales ISO2768-mK

Taille A4		Ecurie Piston Sport Auto	
Dessiné par Clément BOURQUARD	Date 12/11/2013	Désignation Chape vérin droite aluminium	
Coordonnées 06 33 03 95 75 clement.bourquard@ecl2015.ec-lyon.fr		Quantité 1	Matériau Aluminium 2017	Version v1.0
Vérifié par	Date	Echelle 1:2	Numéro du plan 14B013	Feuille 1/1

University	Ecole Centrale de Lyon			**Car #**	81	**Part Cost**	$ 9.02
System	Frame and Body	**FileLink1**				**Qty**	1
Assembly	Shifter	**FileLink2**		**FileLink1**			
Part	Actuator left steel mount	**FileLink3**		**FileLink2**		**Extended Cost**	$ 9.02
P/N Base	06004			**FileLink3**			
Suffix	AA						
Details							

ItemOrder	Material	Use	UnitCost	Size1	Unit1	Size2	Unit2	Area Name	Area	Length	Density	Quantity	Sub Total
10	Steel, Mild	Material for part	$ 2.25	0.048	m	0.032	m	Rectangular 48 mm x 32 mm	0.001536	0.029	7,860.00	1	$ 0.79
												Sub Total	**$ 0.79**

ItemOrder	Process	Use	UnitCost	Unit	Quantity	Multiplier	Mult. Val.	Sub Total
10	Machining Setup, Install and remove		$ 1.30		1			$ 1.30
20	Machining	Main shape contouring	$ 0.04	cm^3	23.5	Material - Steel	3	$ 2.82
30	Machining Setup Change		$ 0.65	unit	1			$ 0.65
40	Machining	Central groove machinig	$ 0.04	cm^3	11.6	Material - Steel	3	$ 1.39
50	Drilled holes < 25.4 mm dia.	Aluminium left mount fixating holes	$ 0.35	hole	5			$ 1.75
60	Threading, Internal (machining)	Holes threading	$ 0.10	cm	3.2			$ 0.32
							Sub Total	**$ 8.23**

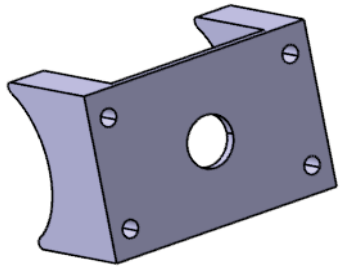

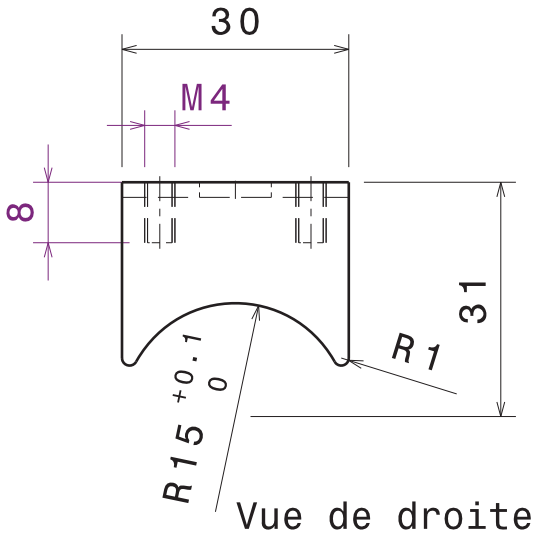

Vue de droite
Echelle : 1:1

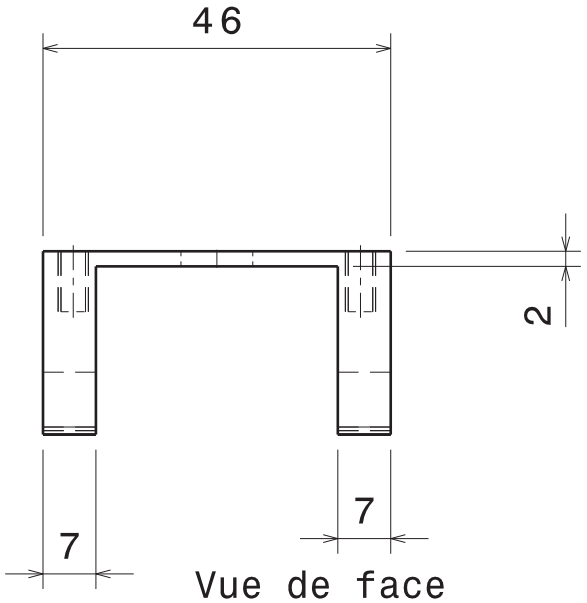

Vue de face
Echelle : 1:1

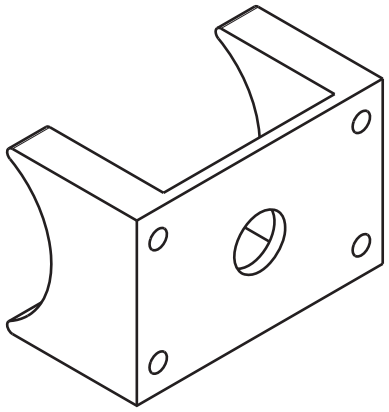

Vue isométrique
Echelle : 1:1

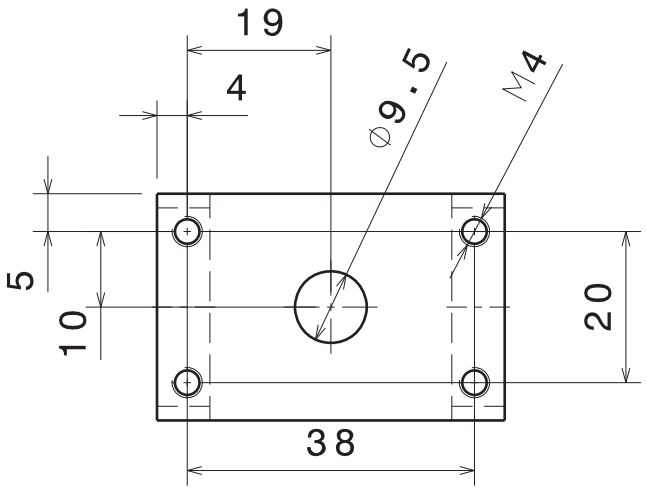

Vue de dessus
Echelle : 1:1

Tolérances générales ISO 2768-mK Casser les angles vifs

Taille A4		Ecurie Piston Sport Auto	
Dessiné par Clément BOURQUARD	Date 12/11/2013	Désignation Chape vérin gauche acier	
Coordonnées 06 33 03 95 75 clement.bourquard@ecl2015.ec-lyon.fr		Quantité 1	Matériau Acier S235	Version v1.0
Vérifié par	Date	Echelle 1:1	Numéro du plan 14B012	Feuille 1/1

University	Ecole Centrale de Lyon			**Car #**	81	**Part Cost**	$ 3.00
System	Frame and Body	**FileLink1**				**Qty**	1
Assembly	Shifter	**FileLink2**		**FileLink1**			
Part	Actuator left aluminium mount	**FileLink3**		**FileLink2**		**Extended Cost**	$ 3.00
P/N Base	06005			**FileLink3**			
Suffix	AA						
Details							

ItemOrder	Material	Use	UnitCost	Size1	Unit1	Size2	Unit2	Area Name	Area	Length	Density	Quantity	Sub Total
10	Aluminum, Normal	Material for part	$ 4.20	0.048	m	0.032	m	Rectangular 48 mm x 32 mm	0.001536	0.007	2,710.00	1	$ 0.12
												Sub Total	**$ 0.12**

ItemOrder	Process	Use	UnitCost	Unit	Quantity	Multiplier	Mult. Val.	Sub Total
10	Machining Setup, Install and remove		$ 1.30		1			$ 1.30
20	Machining		$ 0.04	cm^3	4.46	Material - Aluminium	1	$ 0.18
30	Drilled holes < 25.4 mm dia.		$ 0.35	hole	4			$ 1.40
							Sub Total	**$ 2.88**

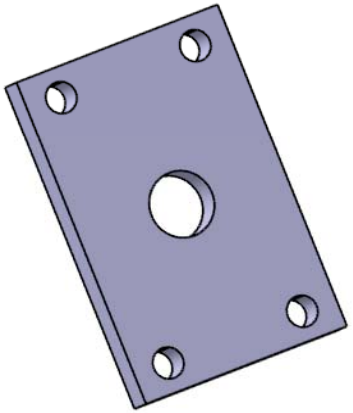

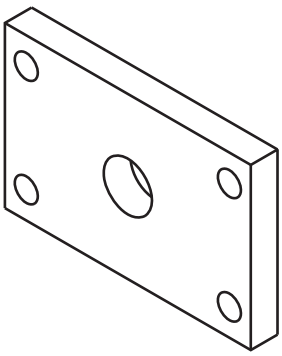

Vue isométrique
Echelle : 1:1

Vue de dessous
Echelle : 1:1

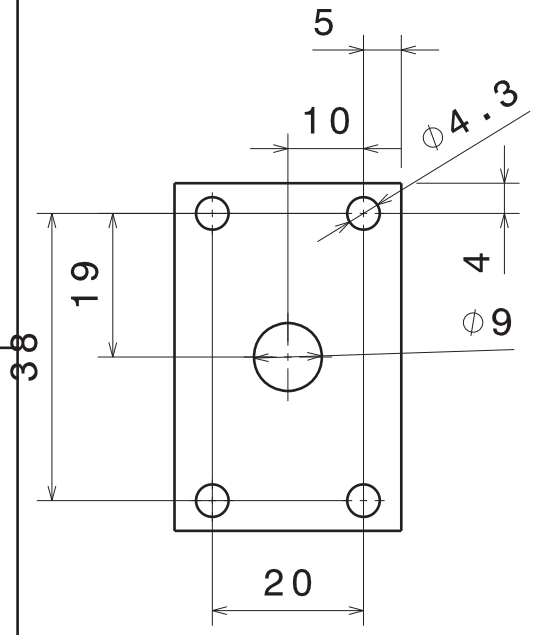

Vue de droite
Echelle : 1:1

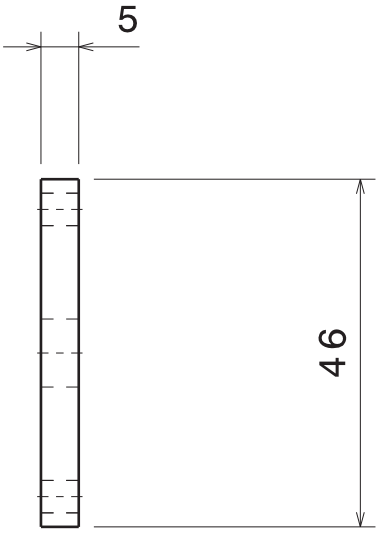

Vue de face
Echelle : 1:1

Tolérances générales ISO 2768-mK

Taille A4		Ecurie Piston Sport Auto
Dessiné par Clément BOURQUARD	Date 12/11/2013	Désignation: Chape vérin gauche aluminium
Coordonnées 06 33 03 95 75 clement.bourquard@ecl2015.ec-lyon.fr		Quantité: 1 / Matériau: Aluminium 2017 / Version: v1.0
Vérifié par	Date	Echelle 1:1 / Numéro du plan 14M112 / Feuille 1/1

University	Ecole Centrale de Lyon			**Car #**	81	**Part Cost**	$ 4.17
System	Frame and Body	**FileLink1**				**Qty**	1
Assembly	Shifter	**FileLink2**		**FileLink1**			
Part	Right half-collar	**FileLink3**		**FileLink2**		**Extended Cost**	$ 4.17
P/N Base	06006			**FileLink3**			
Suffix	AA						
Details	The two half collars are made from the same raw material						

ItemOrder	Material	Use	UnitCost	Size1	Unit1	Size2	Unit2	Area Name	Area	Length	Density	Quantity	Sub Total
10	Aluminum, Normal	Material for part	$ 4.20	0.088	m			Demi disc Ø 88mm	0.003041	0.017	2,710.00	1	$ 0.59
												Sub Total	**$ 0.59**

ItemOrder	Process	Use	UnitCost	Unit	Quantity	Multiplier	Mult. Val.	Sub Total
10	Machining Setup, Install and remove		$ 1.30		1	Left and Right half collars made as a single machiened part which is then cut in half	0.5	$ 0.65
20	Machining	Main shape contouring	$ 0.04	cm^3	43.1	Material - Aluminium	1	$ 1.72
30	Drilled holes < 25.4 mm dia.		$ 0.35	hole	3			$ 1.05
40	Threading, Internal (machining)		$ 0.10	cm	1.6			$ 0.16
							Sub Total	**$ 3.58**

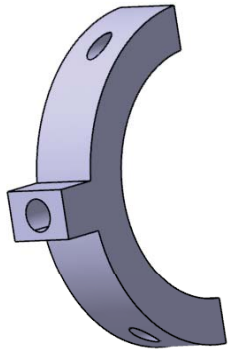

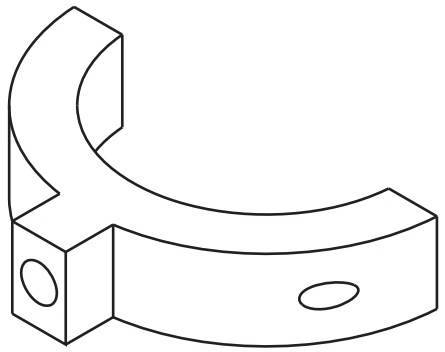

Vue isométrique
Echelle : 1:1

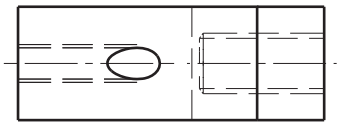

Vue de dessous
Echelle : 1:1

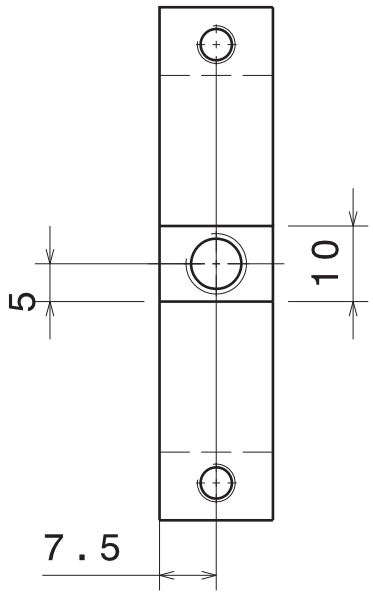

Vue de droite
Echelle : 1:1

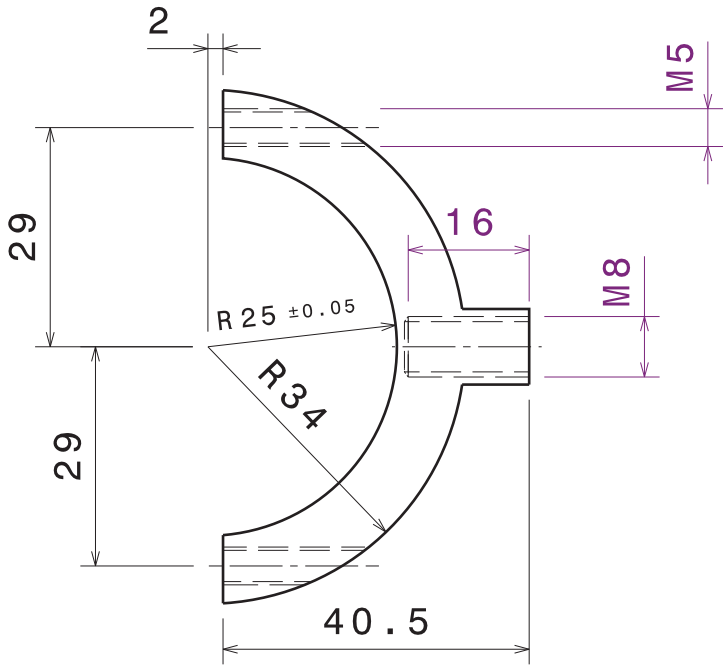

Vue de face
Echelle : 1:1

Tolérances générales ISO 2768-mK

Casser les angles vifs

Taille A4		Ecurie Piston Sport Auto	
Dessiné par Clément BOURQUARD	Date 12/11/2013	Désignation Demi-collier vérin gauche	
Coordonnées 06 33 03 95 75 clement.bourquard@ecl2015.ec-lyon.fr		Quantité 1	Matériau Aluminium 2017	Version v1.0
Vérifié par	Date	Echelle 1:1	Numéro du plan 14B040	Feuille 1/1

University	Ecole Centrale de Lyon			**Car #**	81	**Part Cost**	$ 4.29
System	Frame and Body	**FileLink1**				**Qty**	1
Assembly	Shifter	**FileLink2**		**FileLink1**			
Part	Left half-collar	**FileLink3**		**FileLink2**		**Extended Cost**	$ 4.29
P/N Base	06007			**FileLink3**			
Suffix	AA						
Details							

ItemOrder	Material	Use	UnitCost	Size1	Unit1	Size2	Unit2	Area Name	Area	Length	Density	Quantity	Sub Total
10	Aluminum, Normal	Material for part	$ 4.20	0.088	m			Demi disc Ø 88mm	0.003041	0.017	2,710.00	1	$ 0.59
												Sub Total	**$ 0.59**

ItemOrder	Process	Use	UnitCost	Unit	Quantity	Multiplier	Mult. Val.	Sub Total
10	Machining Setup, Install and remove		$ 1.30		1	Left and Right half collars made as a single machiened part which is then cut in half	0.5	$ 0.65
20	Machining	Main shape contouring and cut	$ 0.04	cm^3	42	Material - Aluminium	1	$ 1.68
30	Drilled holes < 25.4 mm dia.		$ 0.35	hole	3			$ 1.05
40	Threading, Internal (machining)		$ 0.10	cm	3.2			$ 0.32
							Sub Total	**$ 3.70**

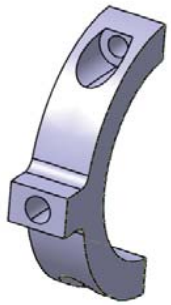

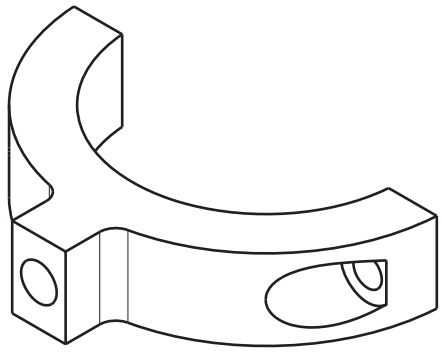

Vue isométrique
Echelle : 1:1

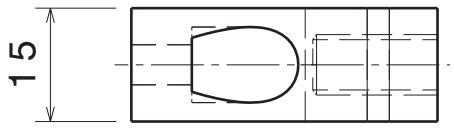

Vue de dessous
Echelle : 1:1

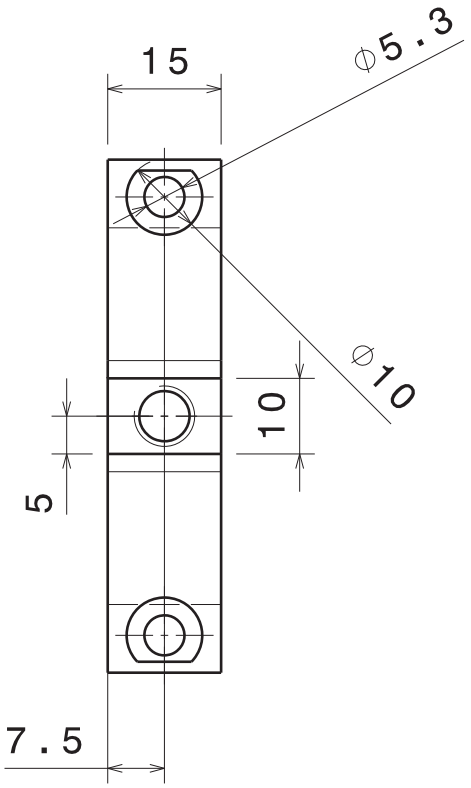

Vue de droite
Echelle : 1:1

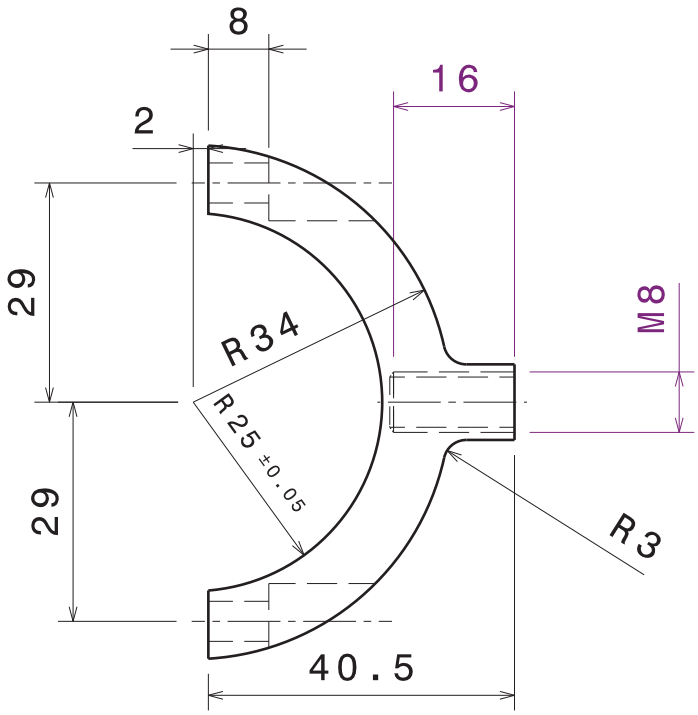

Vue de face
Echelle : 1:1

Tolérances générales ISO 2768-mK Casser les angles vifs

Taille A4		Ecurie Piston Sport Auto	
Dessiné par Clément BOURQUARD	Date 12/11/2013	Désignation Demi-collier vérin droite	
Coordonnées 06 33 03 95 75 clement.bourquard@ecl2015.ec-lyon.fr		Quantité 1	Matériau Aluminium 2017	Version v1.0
Vérifié par	Date	Echelle 1:1	Numéro du plan 14B039	Feuille 1/1

University	Ecole Centrale de Lyon			**Car #**	81	**Part Cost**	$ 7.25
System	Frame and Body	**FileLink1**				**Qty**	1
Assembly	Shifter	**FileLink2**		**FileLink1**			
Part	Gearshift lever	**FileLink3**		**FileLink2**		**Extended Cost**	$ 7.25
P/N Base	06008			**FileLink3**			
Suffix	AA						
Details							

ItemOrder	Material	Use	UnitCost	Size1	Unit1	Size2	Unit2	Area Name	Area	Length	Density	Quantity	Sub Total
10	Steel, Mild	Material for splined cylinder	$ 2.25	0.026	m	0.022	m	Rectangular 26 mm x 22 mm	0.000572	0.02	7,860.00	1	$ 0.17
20	Steel, Mild	Material for tab	$ 2.25	0.079	m	0.022	m	Rectangular 79 mm x 22 mm	0.001738	0.01	7,860.00	1	$ 0.22
												Sub Total	**$ 0.39**

ItemOrder	Process	Use	UnitCost	Unit	Quantity	Multiplier	Mult. Val.	Sub Total
10	Machining Setup, Install and remove		$ 1.30		1			$ 1.30
20	Machining	Contouring	$ 0.04	cm^3	4.02	Material - Steel	3	$ 0.48
30	Broach,Internal	Splines broaching	$ 0.50	cm	2			$ 1.00
40	Threading, Internal (machining)		$ 0.10	cm	2			$ 0.20
50	Machining Setup, Install and remove		$ 1.30		1			$ 1.30
60	Laser Cut	Lever body laser cutting	$ 0.01	cm	28.8	Material - Steel	3	$ 0.86
70	Weld	Lever body on splines welding	$ 0.15	cm	7			$ 1.05
							Sub Total	**$ 6.20**

ItemOrder	Tooling	Use	UnitCost	Unit	Quantity	PVF	FracIncld	Sub Total
10	Welds - Welding Fixture		$ 500.00	point	4	3000	1	$ 0.67
							Sub Total	**$ 0.67**

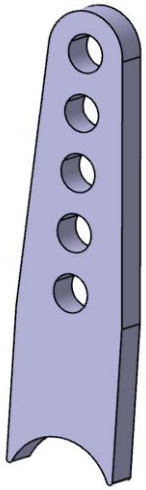

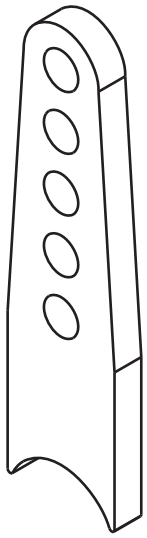

Vue isométrique
Echelle : 1:1

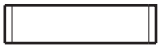

Vue de dessous
Echelle : 1:1

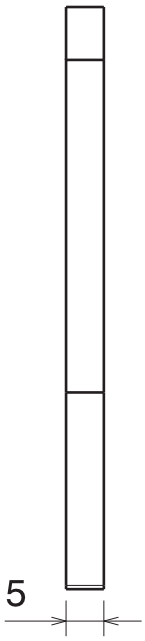

Vue de droite
Echelle : 1:1

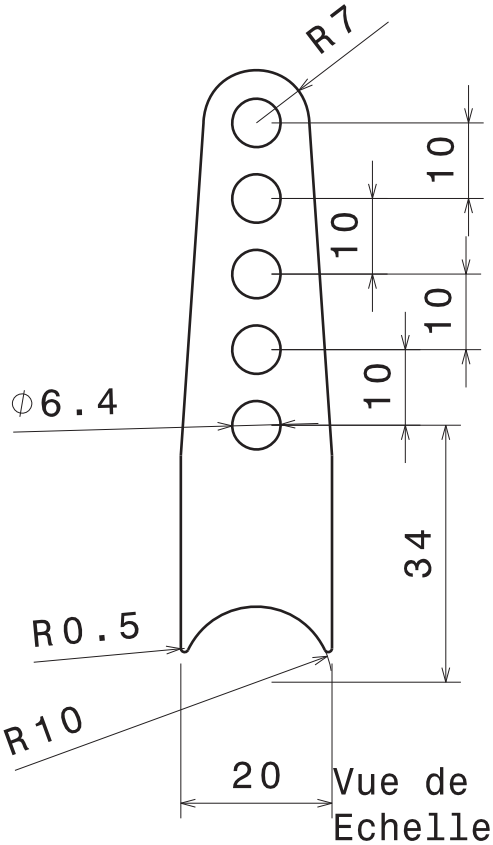

Vue de face
Echelle : 1:1

Tolérances générales ISO 2768-mK

Taille A4		Ecurie Piston Sport Auto	
Dessiné par Clément BOURQUARD	Date 18/11/2013	Désignation Bielette de vérin	
Coordonnées 06 33 03 95 75 clement.bourquard@ecl2015.ec-lyon.fr		Quantité 1	Matériau Acier S235	Version v1.0
Vérifié par	Date	Echelle 1:1	Numéro du plan 14M070	Feuille 1/1

University	Ecole Centrale de Lyon
System	Frame and Body
Assembly	Body
P/N Base	A0007
Suffix	AA
Details	Complete Body assembly

Car #	81	Asm Cost	$ 2,458.35
		Qty	1
FileLink1			
FileLink2		Extended Cost	$ 2,458.35
FileLink3			

ItemOrder	Part	Part Cost	Quantity	Sub Total
10	Body	$ 2,319.93	1	$ 2,319.93
20	Front Mount 1	$ 2.29	2	$ 4.57
30	Front Mount 2	$ 2.23	2	$ 4.47
40	Front Mount 3	$ 2.53	2	$ 5.07
50	Front Lateral Mount 1	$ 2.24	2	$ 4.48
60	Front Lateral Mount 2	$ 2.33	2	$ 4.65
70	Front Lateral Mount 3	$ 2.22	2	$ 4.44
80	Rear Lateral Mount 1	$ 2.25	2	$ 4.50
90	Rear Lateral Mount 2	$ 2.10	2	$ 4.19
100	Rear Lateral Mount 3	$ 2.14	2	$ 4.27
110	Rear Lateral Mount 4	$ 2.19	2	$ 4.37
120	Air Inlet Mount 1	$ 2.86	2	$ 5.71
130	Air Inlet Mount 2	$ 2.40	2	$ 4.80
140	Air Inlet Mount 3	$ 6.16	2	$ 12.32
150	Air Inlet Mount 4	$ 6.18	2	$ 12.36
160	Air Inlet Reinforcement	$ 3.05	2	$ 6.10
			Sub Total	$ 2,406.24

ItemOrder	Material	Use	UnitCost	Size1	Unit1	Size2	Unit2	Area Name	Area	Length	Density	Quantity	Sub Total
10	Paint (cost included in process)	Protect steel tabs from rust	$ 10.00	0.22	m^2							0.22	$ 2.20
												Sub Total	$ 2.20

ItemOrder	Process	Use	UnitCost	Unit	Quantity	Multiplier	Mult. Val.	Sub Total
10	Weld	Weld body mounts to frame	$ 0.15	cm	56		1	$ 8.40
20	Aerosol Apply	Paint welded steel tabs to protect from rust	$ 5.25	m^2	0.22		1	$ 1.16
30	Assemble, 1kg, Loose	Dzus Fastener springs on tabs	$ 0.06	unit	6		1	$ 0.36
40	Riveting	Dzus Fastener springs on tabs	$ 0.25	unit	12		1	
50	Assemble, 1kg, Loose	Body front	$ 0.06	unit	1		1	$ 0.06
60	Screwdriver < 1 Turn	Dzus Fasteners	$ 0.12	unit	6		1	$ 0.72
70	Assemble, 1kg, Loose	Other body panels	$ 0.06	unit	6		1	$ 0.36
80	Ratchet <= 6.35 mm	Other body panels	$ 0.50	unit	22		1	$ 11.00
90	Reaction Tool <= 6.35 mm	Other body panels	$ 0.25	unit	22		1	$ 5.50
100	Assemble, 1kg, Loose	Air inlet reinforcements	$ 0.06	unit	2		1	$ 0.12
110	Ratchet <= 6.35 mm	Air inlet reinforcements	$ 0.50	unit	4		1	$ 2.00
120	Reaction Tool <= 6.35 mm	Air inlet reinforcements	$ 0.25	unit	4		1	$ 1.00
							Sub Total	$ 30.68

ItemOrder	Fastener	Use	UnitCost	Size1	Unit1	Size2	Unit2	Quantity	Sub Total
10	Dzus Fastener, 1/4 Turn, Slotted Head	Fix body front in place	$ 1.20					6	$ 7.20
20	Rivet, pop	Fiz Dzus springs to tabs	$ 0.03					12	$ 0.36
30	Bolt, Grade 8.8 (SAE 5)	Fix other body parts in place	$ 0.04	6	mm	20	mm	22	$ 0.88
40	Nut, Grade 8.8 (SAE 5)	Fix other body parts in place	$ 0.03	6	mm			22	$ 0.66
50	Washer, Grade 8.8 (SAE 5)	Fix other body parts in place	$ 0.01	6	mm			44	$ 0.44
60	Bolt, Grade 8.8 (SAE 5)	Air inlet reinforcements	$ 0.04	6	mm	20	mm	4	$ 0.16
70	Nut, Grade 8.8 (SAE 5)	Air inlet reinforcements	$ 0.03	6	mm			4	$ 0.12
80	Washer, Grade 8.8 (SAE 5)	Air inlet reinforcements	$ 0.01	6	mm			8	$ 0.08
								Sub Total	$ 9.90

ItemOrder	Tooling	Use	UnitCost	Unit	Quantity	PVF	FractionIncluded	Sub Total
10	Weld-Welding fixture	Body mount tabs	$ 500	point	56	3000	1	$ 9.33
							Sub Total	$ 9.33

University	Ecole Centrale de Lyon		**Car #**	81	**Part Cost** $ 2,319.93
System	Frame and Body	**FileLink1**			**Qty** 1
Assembly	Body	**FileLink2**	**FileLink1**		
Part	Body	**FileLink3**	**FileLink2**		**Extended Cost** $ 2,319.93
P/N Base	07001		**FileLink3**		
Suffix	AA				
Details	Carbon fiber body parts				

ItemOrder	Material	Use	UnitCost	Size1	Unit1	Size2	Unit2	Area Name	Area	Length	Density	Quantity	Sub Total
10	Carbon Fiber, 1 Ply	Body Front	$ 200.00	0.41	kg				2.3			3	$ 246.00
20	Carbon Fiber, 1 Ply	Body Front Left	$ 200.00	0.05	kg				0.52			3	$ 30.00
30	Carbon Fiber, 1 Ply	Body Front Right	$ 200.00	0.05	kg				0.52			3	$ 30.00
40	Carbon Fiber, 1 Ply	Body Rear Left	$ 200.00	0.1	kg				0.62			3	$ 60.00
50	Carbon Fiber, 1 Ply	Body Rear Right	$ 200.00	0.1	kg				0.62			3	$ 60.00
60	Carbon Fiber, 1 Ply	Body Air Inlet Left	$ 200.00	0.2	kg				1.15			3	$ 120.00
70	Carbon Fiber, 1 Ply	Body Air Inlet Right	$ 200.00	0.41	kg				1.15			3	$ 246.00
80	Aramid (Kevlar) Fiber, 1 Ply	Body Front	$ 150.00	0.41	kg				2.3			1	$ 61.50
90	Aramid (Kevlar) Fiber, 1 Ply	Body Front Left	$ 150.00	0.05	kg				0.52			1	$ 7.50
100	Aramid (Kevlar) Fiber, 1 Ply	Body Front Right	$ 150.00	0.05	kg				0.52			1	$ 7.50
110	Aramid (Kevlar) Fiber, 1 Ply	Body Rear Left	$ 150.00	0.1	kg				0.62			1	$ 15.00
120	Aramid (Kevlar) Fiber, 1 Ply	Body Rear Right	$ 150.00	0.1	kg				0.62			1	$ 15.00
130	Aramid (Kevlar) Fiber, 1 Ply	Body Air Inlet Left	$ 150.00	0.2	kg				1.15			1	$ 30.00
140	Aramid (Kevlar) Fiber, 1 Ply	Body Air Inlet Right	$ 150.00	0.41	kg				1.15			1	$ 61.50
												Sub Total	**$ 990.000**

ItemOrder	Process	Use	UnitCost	Unit	Quantity	Multiplier	Mult. Val.	Sub Total
10	Lamination, Manual	Body Front	$ 35.00	m^2	2.3	repeat 4	4	$ 322.00
20	Lamination, Manual	Body Front Left	$ 35.00	m^2	0.52	repeat 4	4	$ 72.80
30	Lamination, Manual	Body Front Right	$ 35.00	m^2	0.52	repeat 4	4	$ 72.80
40	Lamination, Manual	Body Rear Left	$ 35.00	m^2	0.62	repeat 4	4	$ 86.80
50	Lamination, Manual	Body Rear Right	$ 35.00	m^2	0.62	repeat 4	4	$ 86.80
60	Lamination, Manual	Body Air Inlet Left	$ 35.00	m^2	1.15	repeat 4	4	$ 161.00
70	Lamination, Manual	Body Air Inlet Right	$ 35.00	m^2	1.15	repeat 4	4	$ 161.00
80	Resin application, Manual	Body Front	$ 5.00	m^2	2.3	repeat 4	4	$ 46.00
90	Resin application, Manual	Body Front Left	$ 5.00	m^2	0.52	repeat 4	4	$ 10.40
100	Resin application, Manual	Body Front Right	$ 5.00	m^2	0.52	repeat 4	4	$ 10.40
110	Resin application, Manual	Body Rear Left	$ 5.00	m^2	0.62	repeat 4	4	$ 12.40
120	Resin application, Manual	Body Rear Right	$ 5.00	m^2	0.62	repeat 4	4	$ 12.40
130	Resin application, Manual	Body Air Inlet Left	$ 5.00	m^2	1.15	repeat 4	4	$ 23.00
140	Resin application, Manual	Body Air Inlet Right	$ 5.00	m^2	1.15	repeat 4	4	$ 23.00
150	Cure, Oven	Body Front	$ 20.00	m^2	2.3			$ 46.00
160	Cure, Oven	Body Front Left	$ 20.00	m^2	0.52			$ 10.40
170	Cure, Oven	Body Front Right	$ 20.00	m^2	0.52			$ 10.40
180	Cure, Oven	Body Rear Left	$ 20.00	m^2	0.62			$ 12.40
190	Cure, Oven	Body Rear Right	$ 20.00	m^2	0.62			$ 12.40
200	Cure, Oven	Body Air Inlet Left	$ 20.00	m^2	1.15			$ 23.00
210	Cure, Oven	Body Air Inlet Right	$ 20.00	m^2	1.15			$ 23.00
220	Drilled holes < 25.4 mm dia.	Body Front	$ 0.35	hole	6			$ 2.10
230	Drilled holes < 25.4 mm dia.	Body Front Lateral parts	$ 0.35	hole	6			$ 2.10
240	Drilled holes < 25.4 mm dia.	Body Rear Lateral parts	$ 0.35	hole	8			$ 2.80
250	Drilled holes < 25.4 mm dia.	Body Air Inlet parts	$ 0.35	hole	8			$ 2.80
260	Non-metallic cutting <= 50.8 mm	Cutouts for suspension tabs and steering rods	$ 0.70	cut	30	Material - Composite	2	$ 42.00
270	Non-metallic cutting <= 76.2 mm	Cutouts for suspension tabs and steering rods	$ 1.05	cut	8	Material - Composite	2	$ 16.80
							Sub Total	**$ 1,307.00**

ItemOrder	Tooling	Use	UnitCost	Unit	Quantity	PVF	FracIncld	Sub Total
10	Lamination - Composite Tool	Mold for body parts	$ 10,000	m^2	6.88	3000	1	$ 22.93
							Sub Total	**$ 22.93**

University	Ecole Centrale de Lyon			**Car #**	81	**Part Cost**	$ 2.29
System	Frame and Body	**FileLink1**				**Qty**	2
Assembly	Body	**FileLink2**		**FileLink1**			
Part	Front Mount 1	**FileLink3**		**FileLink2**		**Extended Cost**	$ 4.57
P/N Base	07002			**FileLink3**			
Suffix	AA						
Details	Steel tab for body mount						

ItemOrder	Material	Use	UnitCost	Size1	Unit1	Size2	Unit2	Area Name	Area	Length	Density	Quantity	Sub Total
10	Steel,Mild	Material for part	$ 2.25	0.113	m	0.042	m	Rectangular 113 mm x 42 mm	0.00475	0.0010	7,860.00	1	$ 0.08
												Sub Total	**$ 0.08**

ItemOrder	Process	Use	UnitCost	Unit	Quantity	Multiplier	Mult. Val.	Sub Total
10	Machining Setup, Install and remove	Setup and remove from laser machine	1.3		1	2 parts cut from a single machine setup	0.5	$ 0.65
20	Laser Cut		$ 0.01	cm	35.1	Material - Steel	3	$ 1.05
30	Sheet metal bends		$ 0.25	bend	2			$ 0.50
							Sub Total	**$ 2.20**

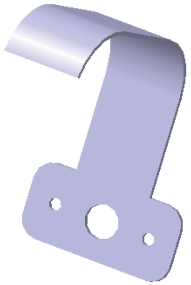

University	Ecole Centrale de Lyon			**Car #**	81	**Part Cost**	$ 2.23
System	Frame and Body	**FileLink1**				**Qty**	2
Assembly	Body	**FileLink2**		**FileLink1**			
Part	Front Mount 2	**FileLink3**		**FileLink2**		**Extended Cost**	$ 4.47
P/N Base	07003			**FileLink3**			
Suffix	AA						
Details	Steel tab for body mount						

ItemOrder	Material	Use	UnitCost	Size1	Unit1	Size2	Unit2	Area Name	Area	Length	Density	Quantity	Sub Total
10	Steel,Mild	Material for part	$ 2.25	0.105	m	0.042	m	Rectangular 105 mm x 42 mm	0.00441	0.0010	7,860.00	1	$ 0.08
												Sub Total	**$ 0.08**

ItemOrder	Process	Use	UnitCost	Unit	Quantity	Multiplier	Mult. Val.	Sub Total
10	Machining Setup, Install and remove	Setup and remove from laser machine	1.3		1	2 parts cut from a single machine setup	0.5	$ 0.65
20	Laser Cut		$ 0.01	cm	33.5	Material - Steel	3	$ 1.01
30	Sheet metal bends		$ 0.25	bend	2			$ 0.50
							Sub Total	**$ 2.16**

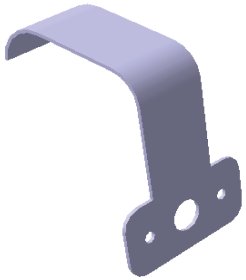

University	Ecole Centrale de Lyon			**Car #**	81	**Part Cost**	$ 2.53
System	Frame and Body	**FileLink1**				**Qty**	2
Assembly	Body	**FileLink2**		**FileLink1**			
Part	Front Mount 3	**FileLink3**		**FileLink2**		**Extended Cost**	$ 5.07
P/N Base	07004			**FileLink3**			
Suffix	AA						
Details	Steel tab for body mount						

ItemOrder	Material	Use	UnitCost	Size1	Unit1	Size2	Unit2	Area Name	Area	Length	Density	Quantity	Sub Total
10	Steel,Mild	Material for part	$ 2.25	0.15	m	0.042	m	Rectangular 150 mm x 42 mm	0.00630	0.0010	7,860.00	1	$ 0.11
												Sub Total	**$ 0.11**

ItemOrder	Process	Use	UnitCost	Unit	Quantity	Multiplier	Mult. Val.	Sub Total
10	Machining Setup, Install and remove	Setup and remove from laser machine	1.3		1	2 parts cut from a single machine setup	0.5	$ 0.65
20	Laser Cut		$ 0.01	cm	42.44	Material - Steel	3	$ 1.27
30	Sheet metal bends		$ 0.25	bend	2			$ 0.50
							Sub Total	**$ 2.42**

University	Ecole Centrale de Lyon			**Car #**	81	**Part Cost**	$ 2.24
System	Frame and Body	**FileLink1**				**Qty**	2
Assembly	Body	**FileLink2**		**FileLink1**			
Part	Front Lateral Mount 1	**FileLink3**		**FileLink2**		**Extended Cost**	$ 4.48
P/N Base	07005			**FileLink3**			
Suffix	AA						
Details	Steel tab for body mount						

ItemOrder	Material	Use	UnitCost	Size1	Unit1	Size2	Unit2	Area Name	Area	Length	Density	Quantity	Sub Total
10	Steel,Mild	Material for part	$ 2.25	0.106	m	0.042	m	Rectangular 106 mm x 42 mm	0.00445	0.0010	7,860.00	1	$ 0.08
												Sub Total	**$ 0.08**

ItemOrder	Process	Use	UnitCost	Unit	Quantity	Multiplier	Mult. Val.	Sub Total
10	Machining Setup, Install and remove	Setup and remove from laser machine	1.3		1	2 parts cut from a single machine setup	0.5	$ 0.65
20	Laser Cut		$ 0.01	cm	33.64	Material - Steel	3	$ 1.01
30	Sheet metal bends		$ 0.25	bend	2			$ 0.50
							Sub Total	**$ 2.16**

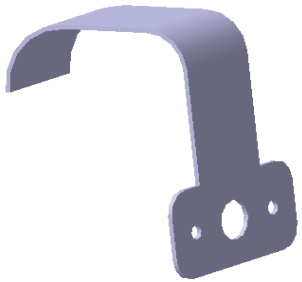

University	Ecole Centrale de Lyon			**Car #**	81	**Part Cost**	$ 2.33
System	Frame and Body	**FileLink1**				**Qty**	2
Assembly	Body	**FileLink2**		**FileLink1**			
Part	Front Lateral Mount 2	**FileLink3**		**FileLink2**		**Extended Cost**	$ 4.65
P/N Base	07006			**FileLink3**			
Suffix	AA						
Details	Steel tab for body mount						

ItemOrder	Material	Use	UnitCost	Size1	Unit1	Size2	Unit2	Area Name	Area	Length	Density	Quantity	Sub Total
10	Steel,Mild	Material for part	$ 2.25	0.119	m	0.042	m	Rectangular 119 mm x 42 mm	0.00500	0.0010	7,860.00	1	$ 0.09
												Sub Total	**$ 0.09**

ItemOrder	Process	Use	UnitCost	Unit	Quantity	Multiplier	Mult. Val.	Sub Total
10	Machining Setup, Install and remove	Setup and remove from laser machine	1.3		1	2 parts cut from a single machine setup	0.5	$ 0.65
20	Laser Cut		$ 0.01	cm	36.24	Material - Steel	3	$ 1.09
30	Sheet metal bends		$ 0.25	bend	2			$ 0.50
							Sub Total	**$ 2.24**

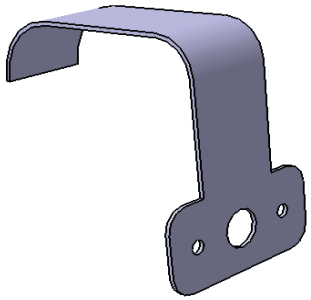

University	Ecole Centrale de Lyon			**Car #**	81	**Part Cost**	$ 2.22
System	Frame and Body	**FileLink1**				**Qty**	2
Assembly	Body	**FileLink2**		**FileLink1**			
Part	Front Lateral Mount 3	**FileLink3**		**FileLink2**		**Extended Cost**	$ 4.44
P/N Base	07007			**FileLink3**			
Suffix	AA						
Details	Steel tab for body mount						

ItemOrder	Material	Use	UnitCost	Size1	Unit1	Size2	Unit2	Area Name	Area	Length	Density	Quantity	Sub Total
10	Steel,Mild	Material for part	$ 2.25	0.103	m	0.042	m	Rectangular 103 mm x 42 mm	0.00433	0.0010	7,860.00	1	$ 0.08
												Sub Total	**$ 0.08**

ItemOrder	Process	Use	UnitCost	Unit	Quantity	Multiplier	Mult. Val.	Sub Total
10	Machining Setup, Install and remove	Setup and remove from laser machine	1.3		1	2 parts cut from a single machine setup	0.5	$ 0.65
20	Laser Cut		$ 0.01	cm	33.04	Material - Steel	3	$ 0.99
30	Sheet metal bends		$ 0.25	bend	2			$ 0.50
							Sub Total	**$ 2.14**

University	Ecole Centrale de Lyon			**Car #**	81	**Part Cost**	$ 2.25
System	Frame and Body	**FileLink1**				**Qty**	2
Assembly	Body	**FileLink2**		**FileLink1**			
Part	Rear Lateral Mount 1	**FileLink3**		**FileLink2**		**Extended Cost**	$ 4.50
P/N Base	07008			**FileLink3**			
Suffix	AA						
Details	Steel tab for body mount						

ItemOrder	Material	Use	UnitCost	Size1	Unit1	Size2	Unit2	Area Name	Area	Length	Density	Quantity	Sub Total
10	Steel,Mild	Material for part	$ 2.25	0.108	m	0.042	m	Rectangular 108 mm x 42 mm	0.00454	0.0010	7,860.00	1	$ 0.08
												Sub Total	**$ 0.08**

ItemOrder	Process	Use	UnitCost	Unit	Quantity	Multiplier	Mult. Val.	Sub Total
10	Machining Setup, Install and remove	Setup and remove from laser machine	1.3		1	2 parts cut from a single machine setup	0.5	$ 0.65
20	Laser Cut		$ 0.01	cm	34.06	Material - Steel	3	$ 1.02
30	Sheet metal bends		$ 0.25	bend	2			$ 0.50
							Sub Total	**$ 2.17**

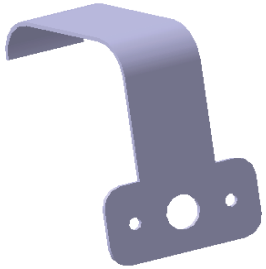

University	Ecole Centrale de Lyon			**Car #**	81	**Part Cost**	$ 2.10
System	Frame and Body	**FileLink1**				**Qty**	2
Assembly	Body	**FileLink2**		**FileLink1**			
Part	Rear Lateral Mount 2	**FileLink3**		**FileLink2**		**Extended Cost**	$ 4.19
P/N Base	07009			**FileLink3**			
Suffix	AA						
Details	Steel tab for body mount						

ItemOrder	Material	Use	UnitCost	Size1	Unit1	Size2	Unit2	Area Name	Area	Length	Density	Quantity	Sub Total
10	Steel,Mild	Material for part	$ 2.25	0.085	m	0.042	m	Rectangular 85 mm x 42 mm	0.00357	0.0010	7,860.00	1	$ 0.06
												Sub Total	**$ 0.06**

ItemOrder	Process	Use	UnitCost	Unit	Quantity	Multiplier	Mult. Val.	Sub Total
10	Machining Setup, Install and remove	Setup and remove from laser machine	1.3		1	2 parts cut from a single machine setup	0.5	$ 0.65
20	Laser Cut		$ 0.01	cm	29.46	Material - Steel	3	$ 0.88
30	Sheet metal bends		$ 0.25	bend	2			$ 0.50
							Sub Total	**$ 2.03**

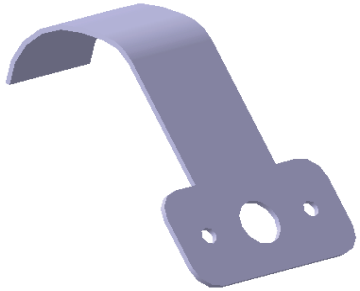

University	Ecole Centrale de Lyon			**Car #**	81	**Part Cost**	$ 2.14
System	Frame and Body	**FileLink1**				**Qty**	2
Assembly	Body	**FileLink2**		**FileLink1**			
Part	Rear Lateral Mount 3	**FileLink3**		**FileLink2**		**Extended Cost**	$ 4.27
P/N Base	07010			**FileLink3**			
Suffix	AA						
Details	Steel tab for body mount						

ItemOrder	Material	Use	UnitCost	Size1	Unit1	Size2	Unit2	Area Name	Area	Length	Density	Quantity	Sub Total
10	Steel,Mild	Material for part	$ 2.25	0.0101	m	0.042	m	Rectangular 101 mm x 42 mm	0.00042	0.0010	7,860.00	1	$ 0.01
												Sub Total	**$ 0.01**

ItemOrder	Process	Use	UnitCost	Unit	Quantity	Multiplier	Mult. Val.	Sub Total
10	Machining Setup, Install and remove	Setup and remove from laser machine	1.3		1	2 parts cut from a single machine setup	0.5	$ 0.65
20	Laser Cut		$ 0.01	cm	32.64	Material - Steel	3	$ 0.98
30	Sheet metal bends		$ 0.25	bend	2			$ 0.50
							Sub Total	**$ 2.13**

University	Ecole Centrale de Lyon			**Car #**	81	**Part Cost**	$ 2.19
System	Frame and Body	**FileLink1**				**Qty**	2
Assembly	Body	**FileLink2**		**FileLink1**			
Part	Rear Lateral Mount 4	**FileLink3**		**FileLink2**		**Extended Cost**	$ 4.37
P/N Base	07011			**FileLink3**			
Suffix	AA						
Details	Steel tab for body mount						

ItemOrder	Material	Use	UnitCost	Size1	Unit1	Size2	Unit2	Area Name	Area	Length	Density	Quantity	Sub Total
10	Steel,Mild		$ 2.25	0.098	m	0.042	m	Rectangular 98 mm x 42 mm	0.00412	0.0010	7,860.00	1	$ 0.07
												Sub Total	**$ 0.07**

ItemOrder	Process	Use	UnitCost	Unit	Quantity	Multiplier	Mult. Val.	Sub Total
10	Machining Setup, Install and remove	Setup and remove from laser machine	1.3		1	2 parts cut from a single machine setup	0.5	$ 0.65
20	Laser Cut		$ 0.01	cm	32.1	Material - Steel	3	$ 0.96
30	Sheet metal bends		$ 0.25	bend	2			$ 0.50
							Sub Total	**$ 2.11**

University	Ecole Centrale de Lyon			**Car #**	81	**Part Cost**	$ 2.86
System	Frame and Body	**FileLink1**				**Qty**	2
Assembly	Body	**FileLink2**		**FileLink1**			
Part	Air Inlet Mount 1	**FileLink3**		**FileLink2**		**Extended Cost**	$ 5.71
P/N Base	07012			**FileLink3**			
Suffix	AA						
Details	Steel tab for body mount						

ItemOrder	Material	Use	UnitCost	Size1	Unit1	Size2	Unit2	Area Name	Area	Length	Density	Quantity	Sub Total
10	Steel,Mild		$ 2.25	0.198	m	0.042	m	Rectangular 198 mm x 42 mm	0.00832	0.0010	7,860.00	1	$ 0.15
												Sub Total	**$ 0.15**

ItemOrder	Process	Use	UnitCost	Unit	Quantity	Multiplier	Mult. Val.	Sub Total
10	Machining Setup, Install and remove	Setup and remove from laser machine	1.3		1	2 parts cut from a single machine setup	0.5	$ 0.65
20	Laser Cut		$ 0.01	cm	52	Material - Steel	3	$ 1.56
30	Sheet metal bends		$ 0.25	bend	2			$ 0.50
							Sub Total	**$ 2.71**

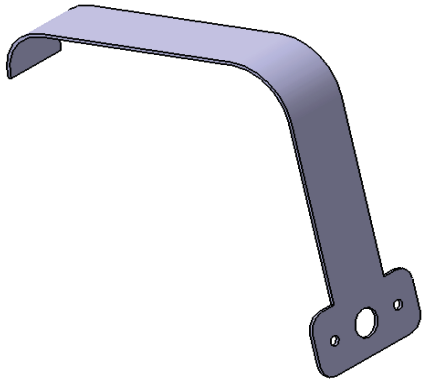

University	Ecole Centrale de Lyon			**Car #**	81	**Part Cost**	$ 2.40
System	Frame and Body	**FileLink1**				**Qty**	2
Assembly	Body	**FileLink2**		**FileLink1**			
Part	Air Inlet Mount 2	**FileLink3**		**FileLink2**		**Extended Cost**	$ 4.80
P/N Base	07013			**FileLink3**			
Suffix	AA						
Details	Steel tab for body mount						

ItemOrder	Material	Use	UnitCost	Size1	Unit1	Size2	Unit2	Area Name	Area	Length	Density	Quantity	Sub Total
10	Steel,Mild		$ 2.25	0.13	m	0.042	m	Rectangular 130 mm x 42 mm	0.00546	0.0010	7,860.00	1	$ 0.10
												Sub Total	**$ 0.10**

ItemOrder	Process	Use	UnitCost	Unit	Quantity	Multiplier	Mult. Val.	Sub Total
10	Machining Setup, Install and remove	Setup and remove from laser machine	1.3		1	2 parts cut from a single machine setup	0.5	$ 0.65
20	Laser Cut		$ 0.01	cm	38.44	Material - Steel	3	$ 1.15
30	Sheet metal bends		$ 0.25	bend	2			$ 0.50
							Sub Total	**$ 2.30**

University	Ecole Centrale de Lyon			**Car #**	81	**Part Cost**	$ 6.16
System	Frame and Body	**FileLink1**				**Qty**	2
Assembly	Body	**FileLink2**		**FileLink1**			
Part	Air Inlet Mount 3	**FileLink3**		**FileLink2**		**Extended Cost**	$ 12.32
P/N Base	07014			**FileLink3**			
Suffix	AA						
Details	Steel tab for body mount						

ItemOrder	Material	Use	UnitCost	Size1	Unit1	Size2	Unit2	Area Name	Area	Length	Density	Quantity	Sub Total
10	Steel,Mild	Material for part	$ 2.25	0.141	m	0.042	m	Rectangular 141 mm x 42 mm	0.00592	0.0010	7,860.00	1	$ 0.10
20	Steel,Mild	Material for part	$ 2.25	0.039	m	0.017	m	Rectangular 39 mm x 17 mm	0.00066	0.0010	7,860.00	1	$ 0.02
												Sub Total	**$ 0.12**

ItemOrder	Process	Use	UnitCost	Unit	Quantity	Multiplier	Mult. Val.	Sub Total
10	Machining Setup, Install and remove	Setup and remove from laser machine	1.3		1		1	$ 1.30
20	Laser Cut	Mount contouring	$ 0.01	cm	40.56	Material - Steel	3	$ 1.22
30	Sheet metal bends	Setup and remove from laser machine	$ 0.25	bend	3			$ 0.75
40	Machining Setup, Install and remove	Mount reinforcement contouring	1.3		1		1	$ 1.30
50	Laser Cut	Setup and remove from laser machine	$ 0.01	cm	9.8	Material - Steel	3	$ 0.29
60	Weld	Reinforcement welding	$ 0.15	cm	5.6			$ 0.84
							Sub Total	**$ 5.70**

ItemOrder	Tooling	Use	UnitCost	Unit	Quantity	PVF	FracIncld	Sub Total
10	Weld-Welding fixture	Gusset reinforcement	$ 500	point	2	3000	1	$ 0.33
							Sub Total	**$ 0.33**

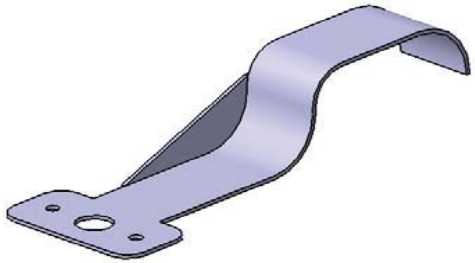

University	Ecole Centrale de Lyon			**Car #**	81	**Part Cost**	$ 6.18
System	Frame and Body	**FileLink1**				**Qty**	2
Assembly	Body	**FileLink2**		**FileLink1**			
Part	Air Inlet Mount 4	**FileLink3**		**FileLink2**		**Extended Cost**	$ 12.36
P/N Base	07015			**FileLink3**			
Suffix	AA						
Details	Steel tab for body mount						

ItemOrder	Material	Use	UnitCost	Size1	Unit1	Size2	Unit2	Area Name	Area	Length	Density	Quantity	Sub Total
10	Steel,Mild	Material for part	$ 2.25	0.141	m	0.042	m	Rectangular 141 mm x 42 mm	0.00592	0.0010	7,860.00	1	$ 0.10
20	Steel,Mild	Material for part	$ 2.25	0.04	m	0.017	m	Rectangular 40 mm x 17 mm	0.00068	0.0010	7,860.00	1	$ 0.02
												Sub Total	**$ 0.12**

ItemOrder	Process	Use	UnitCost	Unit	Quantity	Multiplier	Mult. Val.	Sub Total
10	Machining Setup, Install and remove	Setup and remove from laser machine	1.3		1		1	$ 1.30
20	Laser Cut	Mount contouring	$ 0.01	cm	40.58	Material - Steel	3	$ 1.22
30	Sheet metal bends	Setup and remove from laser machine	$ 0.25	bend	3			$ 0.75
40	Machining Setup, Install and remove	Mount reinforcement contouring	1.3		1		1	$ 1.30
50	Laser Cut	Setup and remove from laser machine	$ 0.01	cm	10	Material - Steel	3	$ 0.30
60	Weld	Reinforcement welding	$ 0.15	cm	5.7			$ 0.86
							Sub Total	**$ 5.72**

ItemOrder	Tooling	Use	UnitCost	Unit	Quantity	PVF	FracIncld	Sub Total
10	Weld-Welding fixture	Gusset reinforcement	$ 500	point	2	3000	1	$ 0.33
							Sub Total	**$ 0.33**

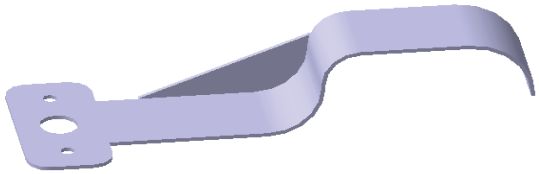

University	Ecole Centrale de Lyon			**Car #**	81	**Part Cost**	$ 3.05
System	Frame and Body	**FileLink1**				**Qty**	2
Assembly	Body	**FileLink2**		**FileLink1**			
Part	Air inlet reinforcement	**FileLink3**		**FileLink2**		**Extended Cost**	$ 6.10
P/N Base	07016			**FileLink3**			
Suffix	AA						
Details	Twisted bar to reinforce air inlets						

ItemOrder	Material	Use	UnitCost	Size1	Unit1	Size2	Unit2	Area Name	Area	Length	Density	Quantity	Sub Total
10	Steel,Mild	Material for part	$ 4.20	0.03	m	0.6	m	Rectangular 50 mm x 600 mm	0.01800	0.0030	2,700.00	1	$ 0.61
												Sub Total	**$ 0.61**

ItemOrder	Process	Use	UnitCost	Unit	Quantity	Multiplier	Mult. Val.	Sub Total
10	Machining Setup, Install and remove	Setup and remove from laser machine	1.3		1	2 parts cut from a single machine setup	0.5	$ 0.65
20	Laser Cut	Shape and holes	$ 0.01	cm	104	Material - Aluminium	1	$ 1.04
30	Sheet metal bends	Twisted bar	$ 0.25	bend	3			$ 0.75
							Sub Total	**$ 2.44**

ELECTRICAL

EPSA TEAM CAR # 81

University	Ecole Centrale de Lyon	**Car #**	81	**Asm Cost**	$ 150.56
System	Electrical			**Qty**	1
Assembly	Battery assembly	**FileLink1**			
P/N Base	A0001	**FileLink2**		**Extended Cost**	$ 150.56
Suffix	AA	**FileLink3**			
Details					

ItemOrder	Part	Part Cost	Quantity	Sub Total
10	Battery tab	$ 1.72	2	$ 3.44
20	Battery bracket	$ 12.49	1	$ 12.93
30	Master switch mount	$ 2.70	1	$ 2.70
			Sub Total	**$ 19.08**

ItemOrder	Material	Use	UnitCost	Size1	Unit1	Size2	Unit2	Area Name	Area	Length	Density	Quantity	Sub Total
10	Paint	Protect tabs from rust	$ 10.00	0.002	m^2							0.044	$ 0.44
20	Mount, Vibration-Damping Sandwich	Battery bracket mount	$ 6.75	25	mm							4	$ 27.00
30	Battery, Advanced Chemistry (NiMH, Li-Ion, etc.)	Starter battery, LiFePO4	$ 65.00	1.3	kg							1	$ 84.50
40	Switch, Kill	Master switch	$ 3.00									1	$ 3.00
50	Wire, power	Battery cables	$ 3.00	0.6	m							1	$ 1.80
60	Connector, Single Wire	Battery terminals	$ 0.05	1	wire							2	$ 0.10
70	Connector, Single Wire	Master switch	$ 0.05	1	wire							2	$ 0.10
80	Connector, Single Wire	Ground cable	$ 0.05	1	wire							2	$ 0.10
												Sub Total	**$ 117.04**

ItemOrder	Process	Use	UnitCost	Unit	Quantity	Multiplier	Mult. Val.	Sub Total
10	Weld	Weld tab to frame	$ 0.15	cm	6			$ 0.90
20	Aerosol Apply	Paint to protect tab from rust	$ 5.25	m^2	0.002			$ 0.01
30	Assemble, 1 kg, Loose	Put battery bracket in place	$ 0.06	unit	1			$ 0.06
40	Ratchet <= 6.35 mm	Battery bracket fasteners	$ 0.50	unit	8			$ 4.00
50	Assemble, 1 kg, Line-on-Line	Insert battery	$ 0.13	unit	1			$ 0.13
60	Assemble, 1 kg, Loose	Master switch mount	$ 0.06	unit	1			$ 0.06
70	Ratchet <= 6.35 mm	Master switch mount bolts	$ 0.50	unit	2			$ 1.00
80	Reaction tool <= 6.35 mm	Master switch mount bolts	$ 0.25	unit	2			$ 0.50
90	Assemble, 1 kg, Loose	Master switch	$ 0.13	unit	2			$ 0.26
100	Ratchet <= 6.35 mm	Master switch bolts	$ 0.06	unit	2			$ 0.12
110	Reaction tool <= 6.35 mm	Master switch bolts	$ 0.25	unit	2			$ 0.50
120	Cut wire	Cut wires to length	$ 0.08	unit	3			$ 0.24
130	Strip wire	Strip wire ends	$ 0.08	unit	6			$ 0.48
140	Crimp Wire	All single-wire connectors	$ 0.17	unit	6			$ 1.02
150	Wire Dressing (Install and route)	Battery and ground wires	$ 1.00	m	0.5			$ 0.50
160	Attach Wire, Ring	Battery terminals	$ 0.48	unit	2			$ 0.96
170	Attach Wire, Ring	Ground wire	$ 0.48	unit	2			$ 0.96
180	Attach Wire, Ring	Master switch terminsals	$ 0.48	unit	2			$ 0.96
							Sub Total	**$ 12.66**

ItemOrder	Fastener	Use	UnitCost	Size1	Unit1	Size2	Unit2	Quantity	Sub Total
10	Washer, Grade 8.8 (SAE 5)	Battery bracket fasteners	$ 0.01	8	mm			8	$ 0.08
20	Nut, Grade 8.8 (SAE 5)	Battery bracket fasteners	$ 0.04	8	mm			8	$ 0.32
30	Bolt, Grade 8.8 (SAE 5)	Battery wire fasteners	$ 0.03	6	mm	10	mm	2	$ 0.06
40	Bolt, Grade 8.8 (SAE 5)	Battery wire fasteners	$ 0.03	6	mm	10	mm	2	$ 0.06
50	Nut, Grade 8.8 (SAE 5)	Master switch fasteners	$ 0.03	6	mm			4	$ 0.12
60	Bolt, Grade 8.8 (SAE 5)	Master switch fasteners	$ 0.07	6	mm	30	mm	2	$ 0.14
70	Bolt, Grade 8.8 (SAE 5)	Master switch fasteners	$ 0.04	6	mm	15	mm	2	$ 0.08
80	Nut, Grade 8.8 (SAE 5)	Master switch wire nuts	$ 0.07	10	mm			2	$ 0.14
90	Bolt, Grade 8.8 (SAE 5)	Ground wire to chassis	$ 0.04	6	mm	15	mm	1	$ 0.04
100	Nut, Grade 8.8 (SAE 5)	Ground wire to chassis	$ 0.07	10	mm			1	$ 0.07
								Sub Total	**$ 1.11**

ItemOrder	Tooling	Use	UnitCost	Unit	Quantity	PVF	FractionIncluded	Sub Total
10	Weld	Weld battery tabs to frame	$ 500.00		4	3000	1	$ 0.67
							Sub Total	**$ 0.67**

University	Ecole Centrale de Lyon			**Car #**	81	**Part Cost**	$ 1.72
System	Electrical	**FileLink1**				**Qty**	1
Assembly	Battery assembly	**FileLink2**		**FileLink1**			
Part	Battery tab	**FileLink3**		**FileLink2**		**Extended Cost**	$ 1.72
P/N Base	01001			**FileLink3**			
Suffix	AA						
Details							

ItemOrder	Material	Use	UnitCost	Size1	Unit1	Size2	Unit2	Area Name	Area	Length	Density	Quantity	Sub Total
10	Steel, Mild	Tab material	$ 2.25	32	mm	27	mm	Rectangular 32 mm x 27 mm	0.001	0.004	7,800.00	1	$ 0.06
												Sub Total	**$ 0.06**

ItemOrder	Process	Use	UnitCost	Unit	Quantity	Multiplier	Mult. Val.	Sub Total
10	Machining Setup, Install and remove	Setup for laser cutting	$ 1.30	unit	1			$ 1.30
20	Laser cut	Shape outline and hole	$ 0.01	cm	12	Material - Steel	3	$ 0.36
							Sub Total	**$ 1.66**

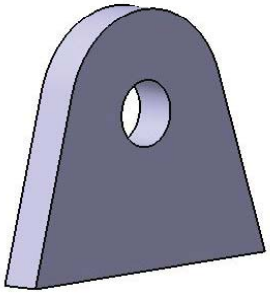

University	Ecole Centrale de Lyon			**Car #**	81	**Part Cost**	$ 12.93
System	Electrical	**FileLink1**				**Qty**	1
Assembly	Battery assembly	**FileLink2**		**FileLink1**			
Part	Battery bracket	**FileLink3**		**FileLink2**		**Extended Cost**	$ 12.93
P/N Base	01002			**FileLink3**			
Suffix	AA						
Details	Housing for the battery						

ItemOrder	Material	Use	UnitCost	Size1	Unit1	Size2	Unit2	Area Name	Area	Length	Density	Quantity	Sub Total
10	Steel, Mild	Bracket material	$ 2.25	130	mm	90	mm	Rectangular 130 mm x 90 mm	0.012	0.002	7,800.00	1	$ 0.41
20	Paint	Protect from rust	$ 10.00	0.044	m^2							0.044	$ 0.44
												Sub Total	**$ 0.85**

ItemOrder	Process	Use	UnitCost	Unit	Quantity	Multiplier	Mult. Val.	Sub Total
10	Machining Setup, Install and remove	Setup for laser cutting	$ 1.30	unit	1			$ 1.30
20	Laser cut	Cutout shapes	$ 0.01	cm	240	Material - Steel	3	$ 7.20
30	Weld	Weld parts together	$ 0.15	cm	15			$ 2.25
40	Aerosol Apply	Paint - Protect from rust	$ 5.25	m^2	0.044		1	$ 0.23
							Sub Total	**$ 10.75**

ItemOrder	Tooling	Use	UnitCost	Unit	Quantity	PVF	FracIncld	Sub Total
10	Welds	Mounts welding	$ 500.00	point	8	3000	1	$ 1.33
							Sub Total	**$ 1.33**

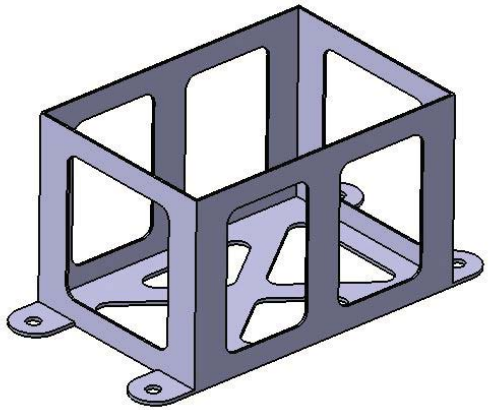

University	Ecole Centrale de Lyon			**Car #**	81	**Part Cost**	$ 2.70
System	Electrical	**FileLink1**				**Qty**	1
Assembly	Battery assembly	**FileLink2**		**FileLink1**			
Part	Master switch mount	**FileLink3**		**FileLink2**		**Extended Cost**	$ 2.70
P/N Base	01003			**FileLink3**			
Suffix	AA						
Details							

ItemOrder	Material	Use	UnitCost	Size1	Unit1	Size2	Unit2	Area Name	Area	Length	Density	Quantity	Sub Total
10	Aluminum, Normal	Material for part	$ 4.20	170	mm	130	mm	Rectangular 170 mm x 130 mm	0.022	0.002	2,710.00	1	$ 0.50
												Sub Total	**$ 0.50**

ItemOrder	Process	Use	UnitCost	Unit	Quantity	Multiplier	Mult. Val.	Sub Total
10	Machining Setup, Install and remove	Setup for laser cutting	$ 1.30	unit	1			$ 1.30
20	Laser cut	Cutout shape	$ 0.01	cm	65	Material - Aluminium	1	$ 0.65
30	Sheet metal bends		$ 0.25	bend	1			$ 0.25
							Sub Total	**$ 2.20**

University	Ecole Centrale de Lyon	**Car #**	81	**Asm Cost**	$ 111.98
System	Electrical			**Qty**	1
Assembly	Dashboard Assembly	**FileLink1**			
P/N Base	A0002	**FileLink2**		**Extended Cost**	$ 111.98
Suffix	AA	**FileLink3**			
Details	Dashboard with gauges and switches				

ItemOrder	Part	Part Cost	Quantity	Sub Total
10	Dashboard	$ 4.70	1	$ 4.70
20	Gear Indicator	$ 46.57	1	$ 46.57
30	Dashboard tab	$ 0.58	6	$ 3.46
40	Gear indicator mount	$ 2.59	1	$ 2.59
			Sub Total	**$ 57.32**

ItemOrder	Material	Use	UnitCost	Size1	Unit1	Size2	Unit2	Area Name	Area	Length	Density	Quantity	Sub Total
10	Gauge, Analog	RPM tachometer	$ 5.00									1	$ 5.00
20	Gauge, Analog	Water temp. gauge	$ 5.00									1	$ 5.00
30	Gauge, Analog Housing	Housings for both gauges	$ 8.00									2	$ 16.00
40	Switch, Kill	Cockpit master switch	$ 3.00									1	$ 3.00
50	Lamp, LED	Dashboard indicators and shiftlight	$ 0.50									4	$ 2.00
60	Switch, Pushbutton	Engine start	$ 1.00									1	$ 1.00
70	Switch, Pushbutton	RPM gauge	$ 1.00									1	$ 1.00
80	Switch, Toggle	Power (on-off)	$ 1.00									1	$ 1.00
90	Switch, Toggle	Manual fan power	$ 1.00									1	$ 1.00
100	Paint	Protect welded steel tabs from rust	$ 10.00	0.01	m^2							0.01	$ 0.10
												Sub Total	**$ 35.10**

ItemOrder	Process	Use	UnitCost	Unit	Quantity	Multiplier	Mult. Val.	Sub Total
10	Weld	weld tabs to chassis	$ 0.15	cm	12		1	$ 1.80
20	Aerosol Apply	Paint welded steel tabs to protect from	$ 5.25	m^2	0.01		1	$ 0.05
30	Assemble, 1 kg, Loose	Put dashboard in position	$ 0.06	unit	1		1	$ 0.06
40	Ratchet <= 6.35 mm	Bolt dashboard to tabs	$ 0.50	unit	6		1	$ 3.00
50	Reaction Tool <= 6.35 mm	Reaction tool for M4 nuts	$ 0.25	unit	6		1	$ 1.50
60	Assemble, 1 kg, Line-on-line	Install switches and LED indicators	$ 0.13	unit	9		1	$ 1.17
80	Ratchet <= 6.35 mm	Tighten indicators	$ 0.50	unit	4		1	$ 2.00
90	Ratchet <= 25.4 mm	Tighten switches	$ 0.75	unit	5		1	$ 3.75
100	Assemble, 1 kg, Line-on-line	Install gauges	$ 0.13	unit	2		1	$ 0.26
120	Hand, Tight <= 6.35 mm	Tighten gauges (screws)	$ 0.50	unit	4		1	$ 2.00
130	Assemble, 1 kg, Line-on-line	Assemble gear indicator	$ 0.13	unit	9		1	$ 1.17
140	Riveting	Assemble gear indicator mount	$ 0.25	unit	2		1	$ 0.50
							Sub Total	**$ 17.26**

ItemOrder	Fastener	Use	UnitCost	Size1	Unit1	Size2	Unit2	Quantity	Sub Total
10	Bolt, Grade 8.8 (SAE 5)	Fix dashboard to tabs	$ 0.01	4	mm	10	mm	6	$ 0.06
20	Nut, Grade 8.8 (SAE 5)	Fix dashboard to tabs	$ 0.02	4	mm			6	$ 0.12
30	Washer, Grade 8.8 (SAE 5)	Fix dashboard to tabs	$ 0.01	4	mm			6	$ 0.06
40	Rivet, Pop	Fix gear indicator tab to dashboard	$ 0.03					2	$ 0.06
								Sub Total	**$ 0.30**

ItemOrder	Tooling	Use	UnitCost	Unit	Quantity	PVF	FractionIncluded	Sub Total
10	Welds - Welding Fixture	Dashboard tabs	$ 500.00	point	12	3000	1	$ 2.00
							Sub Total	**$ 2.00**

University	Ecole Centrale de Lyon			**Car #**	81	**Part Cost**	$ 4.70
System	Electrical	**FileLink1**				**Qty**	1
Assembly	Dashboard Assembly	**FileLink2**		**FileLink1**			
Part	Dashboard	**FileLink3**		**FileLink2**		**Extended Cost**	$ 4.70
P/N Base	02001			**FileLink3**			
Suffix	AA						
Details	Aluminium dashboard						

ItemOrder	Material	Use	UnitCost	Size1	Unit1	Size2	Unit2	Area Name	Area	Length	Density	Quantity	Sub Total
10	Aluminium, normal	material for part	$ 4.20	530	mm	112	mm	Rectangular area 530mm x 112mmm	0.059	0.002	2,710.00	1	$ 1.01
												Sub Total	**$ 1.01**

ItemOrder	Process	Use	UnitCost	Unit	Quantity	Multiplier	Mult. Val.	Sub Total
10	Machining Setup, Install and remove	Install and remove part from laser machine	$ 1.30	unit	1			$ 1.30
20	Laser cut	cutout shape	$ 0.01	cm	189			$ 1.89
30	Sheet metal bends	for edge bends	$ 0.25	bend	2			$ 0.50
							Sub Total	**$ 3.69**

University	Ecole Centrale de Lyon			**Car #**	81	**Part Cost**	$ 46.57
System	Electrical	**FileLink1**				**Qty**	1
Assembly	Dashboard Assembly	**FileLink2**		**FileLink1**			
Part	Gear indicator	**FileLink3**		**FileLink2**		**Extended Cost**	$ 46.57
P/N Base	02002			**FileLink3**			
Suffix	AA						
Details	Part bought, cost as made						

ItemOrder	Material	Use	UnitCost	Size1	Unit1	Size2	Unit2	Area Name	Area	Length	Density	Quantity	Sub Total
10	Display, 7 Segment	Display gear number	$ 1.00	unit								1	$ 1.00
20	Chassis Control Module, Baseline Enclosure	Indicator enclosure	$ 25.00	unit								1	$ 25.00
30	Chassis Control Module, +Dashboard	Control gear number	$ 20.00	unit								1	$ 20.00
												Sub Total	**$ 46.00**

ItemOrder	Process	Use	UnitCost	Unit	Quantity	Multiplier	Mult. Val.	Sub Total
10	Assemble, 1 kg, Interference	Assemble parts together	$ 0.19	unit	3			$ 0.57
							Sub Total	**$ 0.57**

University	Ecole Centrale de Lyon			**Car #**	81	**Part Cost**	$ 0.58
System	Electrical	**FileLink1**				**Qty**	6
Assembly	Dashboard Assembly	**FileLink2**		**FileLink1**			
Part	Dashboard tab	**FileLink3**		**FileLink2**		**Extended Cost**	$ 3.46
P/N Base	02003			**FileLink3**			
Suffix	AA						
Details	Steel tab welded to frame						

ItemOrder	Material	Use	UnitCost	Size1	Unit1	Size2	Unit2	Area Name	Area	Length	Density	Quantity	Sub Total
10	Aluminium, normal	material for part	$ 4.20	40	mm	25	mm	Rectangular area 40mm x 25mm	0.001	0.002	8,010.00	1	$ 0.05
												Sub Total	**$ 0.05**

ItemOrder	Process	Use	UnitCost	Unit	Quantity	Multiplier	Mult. Val.	Sub Total
10	Machining Setup, Install and remove	Install and remove part from laser machine	$ 1.30	unit	1	6 parts made from a single machining setup	0.167	$ 0.22
20	Laser cut	cutout shape	$ 0.01	cm	10.3	Material - Steel	3	$ 0.31
							Sub Total	**$ 0.53**

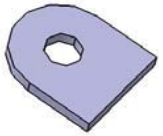

University	Ecole Centrale de Lyon			**Car #**	81	**Part Cost**	$ 2.59
System	Electrical	**FileLink1**				**Qty**	1
Assembly	Dashboard Assembly	**FileLink2**		**FileLink1**			
Part	Gear indicator Mount	**FileLink3**		**FileLink2**		**Extended Cost**	$ 2.59
P/N Base	02004			**FileLink3**			
Suffix	AA						
Details	Mount for gear indicator						

ItemOrder	Material	Use	UnitCost	Size1	Unit1	Size2	Unit2	Area Name	Area	Length	Density	Quantity	Sub Total
10	Aluminium, normal (per kg)	Material for part	$ 4.20	90	mm	30	mm	Rectangular area 90mm x 30mm	2.70E-03	0.002	2,710.00	1	$ 0.05
												Sub Total	**$ 0.05**

ItemOrder	Process	Use	UnitCost	Unit	Quantity	Multiplier	Mult. Val.	Sub Total
10	Machining Setup, Install and remove	Install and remove part from laser machine	$ 1.30	unit	1			$ 1.30
20	Laser cut	cutout the outline and holes	$ 0.01	cm	24	Material - Aluminium	1	$ 0.24
30	Sheet metal bends	for edge bends	$ 0.25	bend	4			$ 1.00
							Sub Total	**$ 2.54**

University	Ecole Centrale de Lyon	**Car #**	81	**Asm Cost**	$ 136.84
System	Electrical			**Qty**	1
Assembly	Forward wiring harness	**FileLink1**			
P/N Base	A0003	**FileLink2**		**Extended Cost**	$ 136.84
Suffix	AA	**FileLink3**			
Details	Wiring harness fore of the firewall				

ItemOrder	Part	Part Cost	Quantity	Sub Total
10	Ground tab	$ 1.14	2	$ 2.27
			Sub Total	**$ 2.27**

ItemOrder	Material	Use	UnitCost	Size1	Unit1	Size2	Unit2	Area Name	Area	Length	Density	Quantity	Sub Total
10	Wire, control/signal	From firewall to dashboard	$ 1.00	21.6	m							1	$ 21.60
20	Wire, control/signal	All other dashboard wires	$ 1.00	2.5	m							1	$ 2.50
30	Wire, control/signal	Overtravel switch	$ 1.00	2	m							1	$ 2.00
40	Wire, control/signal	Clutch switch	$ 1.00	1	m							1	$ 1.00
50	Wire Sleeving, Expandable	Gearshifter wiring	$ 1.00	0.25	m							1	$ 0.25
60	Wire Sleeving, Split	All other wiring	$ 0.50	2	m							1	$ 1.00
70	connector, aerospace quality	Firewall connector	$ 1.00	5	pins							1	$ 5.00
80	connector, aerospace quality	Firewall connector	$ 1.00	6	pins							1	$ 6.00
90	connector, aerospace quality	Firewall connector	$ 1.00	7	pins							1	$ 7.00
100	connector, aerospace quality	Gearshifter connector	$ 1.00	3	pins							1	$ 3.00
110	connector, OEM quality	Gear indicator	$ 0.50	3	pins							1	$ 1.50
120	connector, OEM quality	Overtravel switch	$ 0.50	3	pins							2	$ 3.00
130	Connector, Single Wire	Dashboard switches and shift-light	$ 0.05	1	wire							12	$ 0.60
140	Connector, Single Wire	Clutch switch	$ 0.05	1	wire							2	$ 0.10
150	Connector, Single Wire	Dashboard ground rings	$ 0.05	1	wire							5	$ 0.25
160	Fuse Box	Water temp gauge protection fuse	$ 0.25	2	pins							1	$ 0.50
170	Fuse, Control	Water temp gauge protection fuse	$ 0.50	1	unit							1	$ 0.50
180	Relay, Signal	Water temp gauge	$ 2.00	1	unit							1	$ 2.00
190	Heat Shrink Tubing	To cover all soldered connections	$ 0.50	1.8	m							1	$ 0.90
200	Paint	Protect welded steel tabs from rust	$ 10.00	0.004	m^2							1	$ 0.04
												Sub Total	**$ 58.74**

ItemOrder	Process	Use	UnitCost	Unit	Quantity	Multiplier	Mult. Val.	Sub Total
10	Weld	Weld ground tabs behind dashboard	$ 0.15	cm	4		1	$ 0.60
20	Weld	Ground weldnut on ground tab	$ 0.15	cm	2		1	$ 0.30
30	Aerosol Apply	Paint welded steel tabs to protect from rust	$ 5.25	m^2	0.004		1	$ 0.02
40	Cut wire	Cut all wires to correct lengths	$ 0.08	unit	39		1	$ 3.12
50	Strip wire	Strip wire ends	$ 0.08	unit	78		1	$ 6.24
60	Crimp Wire	All quick-connect terminals	$ 0.17	unit	14		1	$ 2.38
70	Crimp Wire	Ground rings	$ 0.17	unit	5		1	$ 0.85
80	Attach Wire, Quick connect terminal	All quick-connect terminals	$ 0.10	unit	14		1	$ 1.40
90	Attach Wire, Ring	Ground rings	$ 0.48	unit	5		1	$ 2.40
100	Ratchet <= 6.35 mm	Bolt for ground rings and relay	$ 0.50	unit	1		1	$ 0.50
110	Reaction tool <= 6.35 mm	Nut for ground rings	$ 0.25	unit	1		1	$ 0.25
120	Ratchet <= 6.35 mm	Bolt for ground rings with weldnut	$ 0.50	unit	1		1	$ 0.50
130	Connector Assembley, Crimp	overtravel switch connector - 2 pins	$ 0.36	contacts	2	repeat 2	2	$ 1.44
140	Attach Wire, Solder wire, straight	overtravel switch pins	$ 0.52	unit	2		1	$ 1.04
150	assemble connector -square, latch	overtravel switch connector	$ 0.17	unit	1		1	$ 0.17
160	Connector Assembley, Crimp	gear indicator - 3 pins	$ 0.36	contacts	3		1	$ 1.08
170	assemble connector -square, latch	gear indicator connector	$ 0.17	unit	1		1	$ 0.17
180	Connector Assembley, Solder	front firewall connectors (male)	$ 0.24	contacts	18		1	$ 4.32
190	Connector Install, Circular, Screw Thread	Plug wires into firewall	$ 0.24	unit	3		1	$ 0.72
200	Connector Assembley, Solder	Gearshifter connector - 3 pins	$ 0.24	contacts	3		1	$ 0.72
210	Connector Install, Circular, friction	Gearshifter connector	$ 0.14	unit	1		1	$ 0.14
220	Attach Wire, Solder wire, not bent	All wire-to-wire connections	$ 0.52	unit	21		1	$ 10.92

230	Cut (scissors,knife)	cut the Heat Shrink tubing to lengh	$ 0.06	cm	1	repeat 44	44	$ 2.64
240	Shrink Tube	Cover all soldered connections	$ 0.15	cm	180		1	$ 27.00
250	Wire Dressing (Install and route)	Install and route wiring harness	$ 1.00	m	3.1		1	$ 3.10
260	Insert Bundle Into Tube or Sleeve	Install and route wiring harness	$ 0.02	m	3		1	$ 0.06
270	Install Tie Wrap	Install and route wiring harness	$ 0.09	unit	12		1	$ 1.08
							Sub Total	**$ 73.16**

ItemOrder	Fastener	Use	UnitCost	Size1	Unit1	Size2	Unit2	Quantity	Sub Total
10	Bolt, Grade 8.8 (SAE 5)	Bolt ground rings to ground tabs	$ 0.04	6	mm	16	mm	2	$ 0.08
20	Nut, Grade 8.8 (SAE 5)	Bolt ground rings to ground tab	$ 0.03	6	mm			1	$ 0.03
40	Nut, Grade 8.8 (SAE 5)	Ground tabs nut - to be welded	$ 0.03	6	mm			1	$ 0.03
30	Washer, Grade 8.8 (SAE 5)	Bolt ground rings to ground tabs	$ 0.01	6	mm			4	$ 0.04
50	Tie Wrap	Wiring harness	$ 0.04					12	$ 0.48
								Sub Total	**$ 0.66**

ItemOrder	Tooling	Use	UnitCost	Unit	Quantity	PVF	FractionIncluded	Sub Total
10	Welds - Welding Fixture	Ground tabs + weldnut	$ 500.00	point	12	3000	1	$ 2.00
							Sub Total	**$ 2.00**

University	Ecole Centrale de Lyon			**Car #**	81	**Part Cost**	$ 1.14
System	Electrical	**FileLink1**				**Qty**	2
Assembly	Forward wiring harness	**FileLink2**		**FileLink1**			
Part	Ground tab	**FileLink3**		**FileLink2**		**Extended Cost**	$ 2.27
P/N Base	03001			**FileLink3**			
Suffix	AA						
Details	Steel tab welded to frame						

ItemOrder	Material	Use	UnitCost	Size1	Unit1	Size2	Unit2	Area Name	Area	Length	Density	Quantity	Sub Total
10	Steel (per kg)	material for tab	$ 2.25	40	mm	40	mm	Rectangular area 40mm x 40mm	0.002	0.002	8,010.00	1	$ 0.04
												Sub Total	**$ 0.04**

ItemOrder	Process	Use	UnitCost	Unit	Quantity	Multiplier	Mult. Val.	Sub Total
10	Machining Setup, Install and remove	Install and remove part from laser machine	$ 1.30	unit	1	2 parts made from a single machining setup	0.5	$ 0.65
20	Laser cut	Cutout shape	$ 0.01	cm	14.8	Material - Steel	3	$ 0.44
							Sub Total	**$ 1.09**

University	Ecole Centrale de Lyon	**Car #**	81	**Asm Cost**	$ 1,034.75
System	Electrical			**Qty**	1
Assembly	Rear wiring harness	**FileLink1**			
P/N Base	A0004	**FileLink2**		**Extended Cost**	$ 1,034.75
Suffix	AA	**FileLink3**			
Details	All parts of the wiring harness behind the firewall				

ItemOrder	Part	Part Cost	Quantity	Sub Total
10	Electrical system tab	$ 0.92	3	$ 2.76
20	ECU bracket	$ 3.30	1	$ 3.30
30	Brake light tab	$ 1.42	2	$ 2.84
			Sub Total	**$ 8.90**

ItemOrder	Material	Use	UnitCost	Size1	Unit1	Size2	Unit2	Area Name	Area	Length	Density	Quantity	Sub Total
10	Paint	Protect welded steel tabs from rust	$ 10.00	0.006	m^2							1	$ 0.06
20	Adhesive	Glue for ECU (cost included in process)	$ -										$ -
30	ECU, OEM Spark & Fuel	Engine control unit	$ 500.00									1	$ 500.00
40	Sensor, Air Temperature	IAT sensor	$ 4.00									1	$ 4.00
50	Sensor, Angular Position	TPS	$ 4.00									1	$ 4.00
60	Sensor, Manifold Absolute Pressure (MAP)	MAP sensor	$ 4.00									1	$ 4.00
70	Sensor, Two State Position	Neutral Sensor	$ 4.00									1	$ 4.00
80	Sensor, Two State Position	Oil pressure switch	$ 4.00									1	$ 4.00
90	Sensor, Two State Position	Clutch switch	$ 4.00									1	$ 4.00
100	Sensor, Thermocouple	ECT sensor	$ 8.00									1	$ 8.00
110	Sensor, Thermocouple	Water temp gauge	$ 8.00									1	$ 8.00
120	connector, OEM quality	IAT sensor	$ 0.50	2	pins							1	$ 1.00
130	connector, OEM quality	TPS	$ 0.50	2	pins							2	$ 2.00
140	connector, OEM quality	MAP sensor	$ 0.50	3	pins							1	$ 1.50
150	connector, OEM quality	ECT sensor	$ 0.50	3	pins							1	$ 1.50
160	connector, OEM quality	Water temp gauge	$ 0.50	2	pins							1	$ 1.00
170	connector, OEM quality	Speed Sensor	$ 0.50	3	pins							1	$ 1.50
180	connector, OEM quality	Ignition Pulse Generator	$ 0.50	2	pins							1	$ 1.00
190	connector, OEM quality	Cam Pulse Generator	$ 0.50	2	pins							1	$ 1.00
200	connector, OEM quality	Neutral sensor	$ 0.50	3	pins							2	$ 3.00
210	connector, OEM quality	ECU connector	$ 0.50	32	pins							2	$ 32.00
220	connector, OEM quality	Diagnostics	$ 0.50	12	pins							1	$ 6.00
230	Connector, High Power, > 2 Amps	Alternator	$ 2.00	3	pins							2	$ 12.00
240	Connector, High Power, > 2 Amps	Regulator/Rectifier	$ 2.00	4	pins							2	$ 16.00
250	Connector, Single Wire	Fuel pump	$ 0.05	1	wire							2	$ 0.10
260	connector, OEM quality	Fan	$ 0.50	2	pins							2	$ 2.00
270	connector, OEM quality	Starter Relay	$ 0.50	3	pins							1	$ 1.50
280	connector, OEM quality	Rear brake light	$ 0.50	2	pins							2	$ 2.00
290	connector, OEM quality	Ignition Coils	$ 0.50	2	pins							4	$ 4.00
300	connector, OEM quality	Ignition Coils	$ 0.50	5	pins							2	$ 5.00
310	connector, OEM quality	Fuel injectors	$ 0.50	2	pins							8	$ 8.00
320	Connector, Single Wire	Starter motor	$ 0.05	1	wire							1	$ 0.05
330	Connector, Single Wire	Starter Relay	$ 0.05	1	wire							2	$ 0.10
340	Connector, Single Wire	Ground rings	$ 0.05	1	wire							5	$ 0.25
350	Connector, Single Wire	Gearshifter bullet connectors	$ 0.05	1	wire							6	$ 0.30
360	connector, OEM quality	Gearshifter wires (Proshift)	$ 0.50	5	pins							2	$ 5.00
370	Connector, OEM quality	Wires towards "Forward Wiring Harness"	$ 0.50	6	pins							6	$ 18.00
380	Connector, OEM quality	Wires towards "Forward Wiring Harness"	$ 0.50	3	pins							2	$ 3.00
390	connector, aerospace quality	Firewall connector	$ 1.00	5	pins							1	$ 5.00
400	connector, aerospace quality	Firewall connector	$ 1.00	6	pins							1	$ 6.00
410	connector, aerospace quality	Firewall connector	$ 1.00	7	pins							1	$ 7.00
420	Relay, power	Engine stop, fuel, fan, starter	$ 4.00									3	$ 12.00
430	Fuse Box	Fuses housing	$ 0.25	12	pins							1	$ 3.00
440	Fuse, power	Various fuses	$ 1.00									6	$ 6.00
450	Fuse Box	Gearshifter and main fuse	$ 0.25	2	pins							2	$ 1.00
460	Fuse, power	Gearshifter and main fuse	$ 1.00									2	$ 2.00
470	Wire, signal	Signal wires for sensors/diagnostics	$ 1.00	12.8	m							1	$ 12.80
480	Wire, control	Gearshifter control module wires	$ 1.00	1.2	m							1	$ 1.20
490	Wire, control/signal	Wires towards "Forward Wiring Harness"	$ 1.00	14.4	m							1	$ 14.40
500	Wire, control/signal	Wires from firewall connectors	$ 1.00	7.2	m							1	$ 7.20

510	Wire, power	Gearshifter control module wires	$ 3.00	1.6	m							1	$ 4.80
520	Wire, power	Wires for power, relays and devices	$ 3.00	29	m							1	$ 87.00
530	Wire Sleeving, Expandable	Wires from firewall	$ 1.00	0.4	m							4	$ 1.60
540	Wire Sleeving, Expandable	Gearshifter control module wires	$ 1.00	0.25	m							2	$ 0.50
550	Wire Sleeving, Split	Wire routing and protection	$ 0.50	2.8	m							1	$ 1.40
560	Heat Shrink Tubing	To cover all soldered connections	$ 0.50	2	m							1	$ 1.00
570	Lamp, Brake with Housing	Rear brake light	$ 4.00									1	$ 4.00
												Sub Total	**$ 846.76**

ItemOrder	Process	Use	UnitCost	Unit	Quantity	Multiplier	Mult. Val.	Sub Total
10	Weld	Weld electrical system tabs to frame	$ 0.15	cm	6		1	$ 0.90
20	Weld	Weldnuts	$ 0.15	cm	2		1	$ 0.30
30	Aerosol Apply	Paint welded steel tabs to protect from rust	$ 5.25	m^2	0.006		1	$ 0.03
40	Cut wire	Cut all wires for sensors to length	$ 0.08	unit	23		1	$ 1.84
50	Strip wire	Strip wire ends	$ 0.08	unit	46		1	$ 3.68
60	Cut wire	Cut other signal/control wires to length	$ 0.08	unit	32		1	$ 2.56
70	Strip wire	Strip wire ends	$ 0.08	unit	64		1	$ 5.12
80	Cut wire	Cut firewall connector wires to length	$ 0.08	unit	18		1	$ 1.44
90	Strip wire	Strip wire ends	$ 0.08	unit	36		1	$ 2.88
100	Cut wire	Cut all power wires to length	$ 0.08	unit	30		1	$ 2.40
110	Strip wire	Strip wire ends	$ 0.08	unit	60		1	$ 4.80
120	Crimp Wire	All single-wire connectors	$ 0.17	unit	14		1	$ 2.38
130	Connector Assembley, Solder	Firewall connector terminals	$ 0.24	contacts	18		1	$ 4.32
140	Connector Assembley, Crimp	Crimp all other connector terminals	$ 0.36	contacts	203		1	$ 73.08
150	Attach Wire, Ring	Ground rings and fuel pump	$ 0.48	unit	7		1	$ 3.36
160	Attach Wire, Solder wire, not bent	All wire-to-wire connections	$ 0.52	unit	30		1	$ 15.60
170	Cut (scissors,knife)	cut the Heat Shrink tubing to lengh	$ 0.06	cm	1	repeat 48	48	$ 2.88
180	Shrink Tube	Cover all soldered connections	$ 0.15	cm	200		1	$ 30.00
190	Wire Dressing (Install and route)	Install and route wiring harness	$ 1.00	m	2.8		1	$ 2.80
200	Insert Bundle Into Tube or Sleeve	Install and route wiring harness	$ 0.02	m	2.6		1	$ 0.05
210	Taping Wire Bundle	Tape large wire bundles	$ 0.04	cm	20		1	$ 0.80
220	Lay wire - power	Brake-light switch wire	$ 0.03	m	1		1	$ 0.03
230	Install Tie Wrap	Install and route wiring harness	$ 0.09	unit	15		1	$ 1.35
240	Assemble, 1 kg, Loose	Gearshifter control unit on bracket	$ 0.06	unit	1		1	$ 0.06
250	Ratchet <= 6.35 mm	Gearshifter control unit control bolt	$ 0.50	unit	4		1	$ 2.00
260	Reaction Tool <= 6.35 mm	Reaction tool for Gearshifter unit nuts	$ 0.25	unit	4		1	$ 1.00
270	Liquid Apply - Spot	Adhesive (glue) on ECU	$ 0.10	unit	1		1	$ 0.10
280	Assemble, 1 kg, Loose	Glue ECU on ECU bracket	$ 0.06	unit	1		1	$ 0.06
290	Assemble, 1 kg, Loose	Assemble ECU bracket on tabs	$ 0.06	unit	1		1	$ 0.06
300	Ratchet <= 6.35 mm	Tighten ECU bracket M6 bolt	$ 0.50	unit	3		1	$ 1.50
310	Assemble, 1 kg, Loose	Put voltage rectifier/regulator in place	$ 0.06	unit	1		1	$ 0.06
320	Ratchet <= 6.35 mm	Bolt voltage regulator in place	$ 0.50	unit	2		1	$ 1.00
330	Reaction Tool <= 6.35 mm	Reaction tool for M6 bolts	$ 0.25	unit	2		1	$ 0.50
340	Assemble, 1 kg, Loose	Mount brake light	$ 0.06	unit	1		1	$ 0.06
350	Ratchet <= 6.35 mm	Brake light nuts	$ 0.50	unit	2		1	$ 1.00
360	Assemble connector -square, latch	Plug in all connectors	$ 0.17	unit	34		1	$ 5.78
							Sub Total	**$ 175.78**

ItemOrder	Fastener	Use	UnitCost	Size1	Unit1	Size2	Unit2	Quantity	Sub Total
10	Bolt, Grade 8.8 (SAE 5)	ECU bracket and regulator bolts	$ 0.04	6	mm	16	mm	5	$ 0.20
20	Nut, Grade 8.8 (SAE 5)	ECU bracket and regulator nuts	$ 0.03	6	mm			3	$ 0.09
30	Nut, Grade 8.8 (SAE 5)	ECU bracket nut - to be welded	$ 0.03	6	mm			2	$ 0.06
40	Washer, Grade 8.8 (SAE 5)	ECU bracket and regulator	$ 0.01	6	mm			7	$ 0.07
50	Bolt, Grade 8.8 (SAE 5)	Gearshifter control unit	$ 0.02	4	mm	15	mm	5	$ 0.10
60	Nut, Grade 8.8 (SAE 5)	Gearshifter control unit	$ 0.02	6	mm			3	$ 0.06
70	Nut, Grade 8.8 (SAE 5)	Brake light nuts	$ 0.02	5	mm			2	$ 0.04
80	Washer, Grade 8.8 (SAE 5)	Brake light washers	$ 0.01	5	mm			4	$ 0.04
90	Tie Wrap	Wiring harness routing	$ 0.04					16	$ 0.64
								Sub Total	**$ 1.30**

ItemOrder	Tooling	Use	UnitCost	Unit	Quantity	PVF	FractionInclud	Sub Total
10	Welds - Welding Fixture	Ground tabs + weldnuts	$ 500.00	point	12	3000	1	$ 2.00
							Sub Total	**$ 2.00**

University	Ecole Centrale de Lyon			**Car #**	81	**Part Cost**	$ 0.92
System	Electrical	**FileLink1**				**Qty**	3
Assembly	Forward wiring harness	**FileLink2**		**FileLink1**			
Part	Electrical system tab	**FileLink3**		**FileLink2**		**Extended Cost**	$ 2.76
P/N Base	04001			**FileLink3**			
Suffix	AA						
Details	Steel tab welded to frame						

ItemOrder	Material	Use	UnitCost	Size1	Unit1	Size2	Unit2	Area Name	Area	Length	Density	Quantity	Sub Total
10	Steel (per kg)	Material for tab	$ 2.25	40	mm	40	mm	Rectangular area 40mm x 40mm	0.002	0.002	8,010.00	1	$ 0.04
												Sub Total	**$ 0.04**

ItemOrder	Process	Use	UnitCost	Unit	Quantity	Multiplier	Mult. Val.	Sub Total
10	Machining Setup, Install and remove	Install and remove part from laser machine	$ 1.30	unit	1	3 parts cut from a single steel sheet and single machine setup	0.333	$ 0.43
20	Laser cut	Cutout shape and holes	$ 0.01	cm	14.8	Material - Steel	3	$ 0.44
							Sub Total	**$ 0.88**

University	Ecole Centrale de Lyon			**Car #**	81	**Part Cost**	$ 3.30
System	Electrical	**FileLink1**				**Qty**	1
Assembly	Forward wiring harness	**FileLink2**		**FileLink1**			
Part	ECU bracket	**FileLink3**		**FileLink2**		**Extended Cost**	$ 3.30
P/N Base	04002			**FileLink3**			
Suffix	AA						
Details	Aluminium plate for ECU mount						

ItemOrder	Material	Use	UnitCost	Size1	Unit1	Size2	Unit2	Area Name	Area	Length	Density	Quantity	Sub Total
10	Aluminum, Normal	Bracket material	$ 4.20	250	mm	200	mm	Rectangular area 250mm x 200mm	0.050	0.002	2,710.00	1	$ 0.85
												Sub Total	**$ 0.85**

ItemOrder	Process	Use	UnitCost	Unit	Quantity	Multiplier	Mult. Val.	Sub Total
10	Machining Setup, Install and remove	Install and remove part from laser machine	$ 1.30	unit	1			$ 1.30
20	Laser cut	Cutout shape	$ 0.01	cm	90	Material - Aluminium	1	$ 0.90
30	Sheet metal bends	Edge bend	$ 0.25	bend	1		1	$ 0.25
							Sub Total	**$ 2.45**

University	Ecole Centrale de Lyon			**Car #**	81	**Part Cost**	$ 1.42
System	Electrical	**FileLink1**				**Qty**	2
Assembly	Forward wiring harness	**FileLink2**		**FileLink1**			
Part	Brake light tab	**FileLink3**		**FileLink2**		**Extended Cost**	$ 2.84
P/N Base	04003			**FileLink3**			
Suffix	AA						
Details	Steel tab welded to frame						

ItemOrder	Material	Use	UnitCost	Size1	Unit1	Size2	Unit2	Area Name	Area	Length	Density	Quantity	Sub Total
10	Steel (per kg)	material for tab	$ 2.25	20	mm	60	mm	Rectangular area 40mm x 40mm	0.001	0.002	8,010.00	1	$ 0.03
												Sub Total	**$ 0.03**

ItemOrder	Process	Use	UnitCost	Unit	Quantity	Multiplier	Mult. Val.	Sub Total
10	Machining Setup, Install and remove	Install and remove part from laser machine	$ 1.30	unit	1	2 parts cut from a single steel sheet and single machine setup	0.5	$ 0.65
20	Laser cut	cutout shape and holes	$ 0.01	cm	16.2	Material - Steel	3	$ 0.49
30	Sheet metal bends	Edge bend	$ 0.25	bend	1		1	$ 0.25
							Sub Total	**$ 1.39**

MISCELLANEOUS FIT AND FINISH

EPSA TEAM CAR # 81

University	Ecole Centrale de Lyon	**Car #**	81	**Asm Cost**	$ 123.73
System	Miscellaneous			**Qty**	1
Assembly	Firewall	**FileLink1**			
P/N Base	A0001	**FileLink2**		**Extended Cost**	$ 123.73
Suffix	AA	**FileLink3**			
Details	Aluminium firewall				

ItemOrder	Part	Part Cost	Quantity	Sub Total
10	Firewall main plate	$ 19.81	1	$ 19.81
20	Firewall rear right plate	$ 3.27	1	$ 3.27
30	Firewall rear left plate	$ 3.27	1	$ 3.27
40	Firewall right plate	$ 9.05	1	$ 9.05
50	Firewall left plate	$ 9.05	1	$ 9.05
60	Firewall pass-through plate 1	$ 2.93	1	$ 2.93
70	Firewall pass-through plate 2	$ 3.22	1	$ 3.22
80	Tab 1	$ 1.03	2	$ 2.06
90	Tab 2	$ 1.04	2	$ 2.09
100	Tab 3-4	$ 0.70	4	$ 2.80
110	Tab 5-9	$ 0.71	4	$ 2.82
120	Tab 6	$ 0.70	4	$ 2.80
130	Tab 7	$ 0.71	4	$ 2.85
140	Tab 8	$ 0.64	2	$ 1.29
150	Tab 10	$ 7.50	1	$ 7.50
			Sub Total	**$ 74.80**

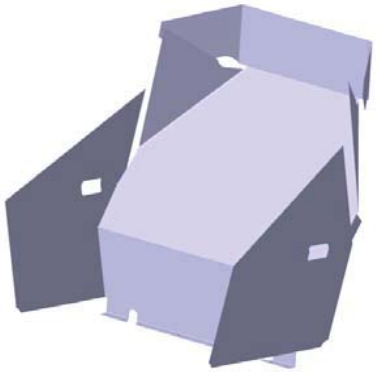

ItemOrder	Material	Use	UnitCost	Size1	Unit1	Size2	Unit2	Area Name	Area	Length	Density	Quantity	Sub Total
10	Grommet, Elastomer	Cable pass-throughs	$ 0.05									3	$ 0.15
20	Paint	Steel tabs painting	$ 10.00		m^2							0.101	$ 1.01
												Sub Total	**$ 1.16**

ItemOrder	Process	Use	UnitCost	Unit	Quantity	Multiplier	Mult. Val.	Sub Total
10	Weld	Tabs welding on frame	$ 0.15	cm	82		1	$ 12.30
20	Aeroso lapply	Tabs painting	$ 5.25	m^2	0.101		1	$ 0.53
30	Assemble, 1kg, Line-on-line	Right and left plates installation	$ 0.13		2		1	$ 0.26
40	Riveting	Side plates riveting	$ 0.25		12		1	$ 3.00
50	Assemble, 3kg, Interference	Main plate installation	$ 0.56		1		1.25	$ 0.70
60	Riveting	Main plate riveting	$ 0.25		18		1	$ 4.50
70	Ratchet <= 6.35 mm	M6 bolts installation	$ 0.50		2		1.25	$ 1.25
80	Assemble ,1 kg, Line-on-line	Rear plates installation	$ 0.13		2		1	$ 0.26
90	Riveting	Rear plates riveting	$ 0.25		8		1	$ 2.00
100	Brush apply (glue)	Pass-through plates gluing	$ 0.02	cm^2	240		1	$ 4.80
110	Assemble ,1 kg, Line-on-line	Pass-through plates gluing	$ 0.13		2		1	$ 0.26
120	Assemble ,1 kg, Line-on-line	Pass-through grommets installation	$ 0.13		3		1	$ 0.39
130	Assemble ,1 kg, Line-on-line	Pass-through plates installation	$ 0.13		1		1	$ 0.13
140	Riveting	Pass-through plates riveting	$ 0.25		12		1	$ 3.00
150	Tape	Firewall sealing with aluminium tape	$ 0.80	m	5		1	$ 4.00
							Sub Total	**$ 37.38**

ItemOrder	Fastener	Use	UnitCost	Size1	Unit1	Size2	Unit2	Quantity	Sub Total
10	Rivet, Pop	Firewall rivetting	0.03	4	mm			50	$ 1.50
20	Bolt, Grade 8.8 (SAE 5)	Firewall main plate fixing	0.05	6	mm	25	mm	2	$ 0.10
30	Nutsert	Firewall main plate fixing	0.05	6	mm			2	$ 0.10
40	Washer, Grade 8.8 (SAE 5)	Firewall main plate fixing	0.01	6	mm			2	$ 0.02
								Sub Total	**$ 1.72**

ItemOrder	Tooling	Use	UnitCost	Unit	Quantity	PVF	FractionIncluded	Sub Total
10	Welds-Welding fixture	Tabs welding on frame	$ 500.00	point	52	3000	1	$ 8.67
							Sub Total	**$ 8.67**

University	Ecole Centrale de Lyon			**Car #**	81	**Part Cost**	$ 19.81
System	Miscellaneous	**FileLink1**				**Qty**	1
Assembly	Firewall	**FileLink2**		**FileLink1**			
Part	Firewall main plate	**FileLink3**		**FileLink2**		**Extended Cost**	$ 19.81
P/N Base	01001			**FileLink3**			
Suffix	AA						
Details							

ItemOrder	Material	Use	UnitCost	Size1	Unit1	Size2	Unit2	Area Name	Area	Length	Density	Quantity	Sub Total
10	Aluminium, Normal	Material for part	$ 4.20	0.742	m	0.726	m	Rectangular 742 mm x 726 mm	0.538692	0.001	2,710.00	1	$ 6.13
												Sub Total	**$ 6.13**

ItemOrder	Process	Use	UnitCost	Unit	Quantity	Multiplier	Mult. Val.	Sub Total
10	Machining Setup, Install and remove	Setup for laser cut	1.3		1			$ 1.30
20	Laser Cut		$ 0.01	cm	313.28	Material - Aluminium	1	$ 3.13
30	Sheet metal bends		$ 0.25	bend	9			$ 2.25
40	Drilled holes < 25.4 mm dia.		$ 0.35	hole	20			$ 7.00
							Sub Total	**$ 13.68**

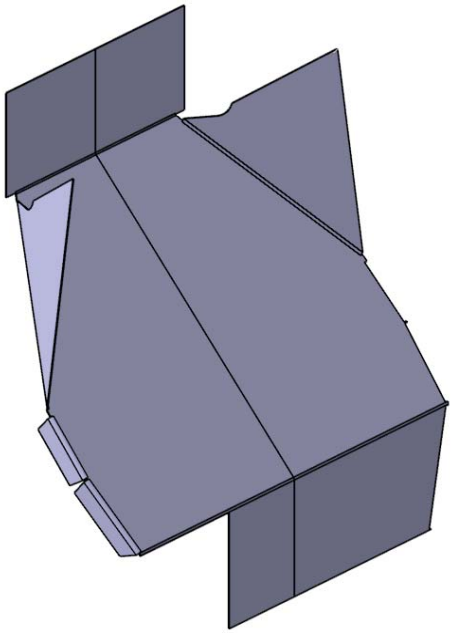

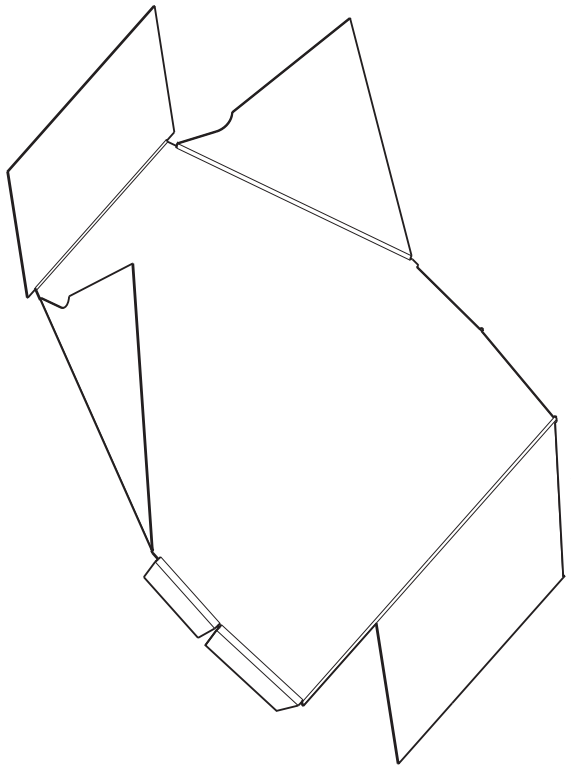

Vue isométrique
Echelle : 1:5

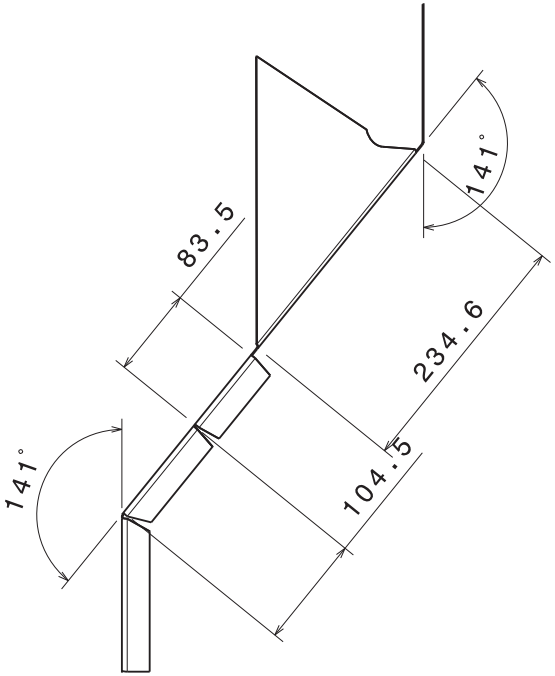

Vue de droite
Echelle : 1:5

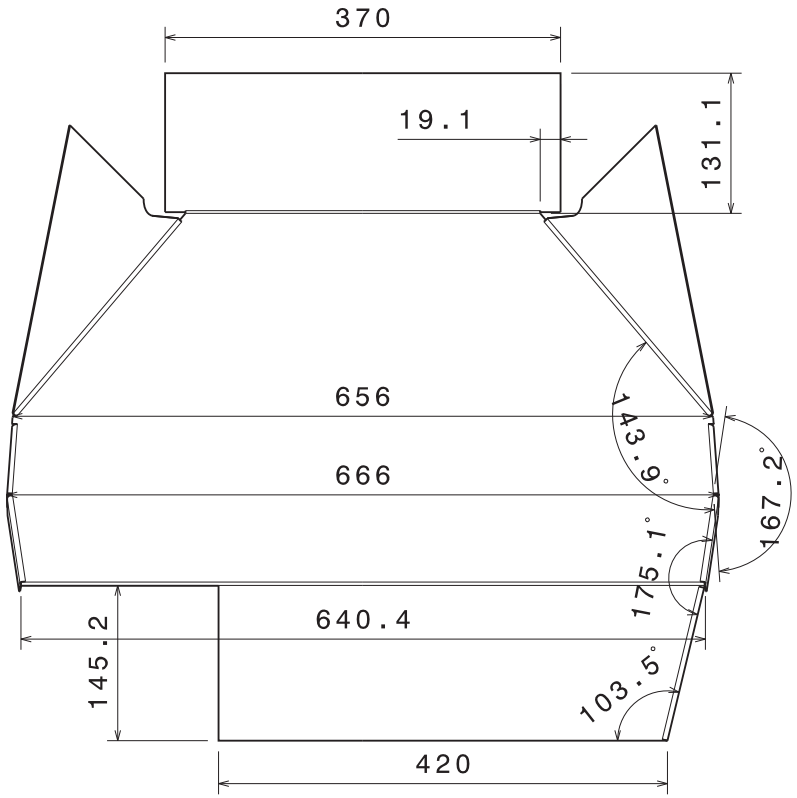

Vue de face
Echelle : 1:5

Tolérances générales ISO 2768 -mK

Taille A3		Ecurie Piston Sport Auto
Dessiné par Clément BOURQUARD	Date 15/02/2014	Désignation plaque ppf centrale
Coordonnées 06 33 03 95 75 clement.bourquard@ecl2015.ec-lyon.fr		Quantité 1 / Matériau Aluminium / Version v2.0
Date de livraison souhaitée 19/02/2014		Echelle 1:5 / Numéro du plan 14M128 / Feuille 1/1

University	Ecole Centrale de Lyon			**Car #**	81	**Part Cost**	$ 3.27
System	Miscellaneous	**FileLink1**				**Qty**	1
Assembly	Firewall	**FileLink2**		**FileLink1**			
Part	Firewall rear right plate	**FileLink3**		**FileLink2**		**Extended Cost**	$ 3.27
P/N Base	01002			**FileLink3**			
Suffix	AA						
Details							

ItemOrder	Material	Use	UnitCost	Size1	Unit1	Size2	Unit2	Area Name	Area	Length	Density	Quantity	Sub Total
10	Aluminium, Normal	Material for part	$ 4.20	0.232	m	0.135	m	Rectangular 232 mm x 135 mm	0.03132	0.001	2,710.00	1	$ 0.36
												Sub Total	**$ 0.36**

ItemOrder	Process	Use	UnitCost	Unit	Quantity	Multiplier	Mult. Val.	Sub Total
10	Machining Setup, Install and remove	Setup for laser cut	1.3		1			$ 1.30
20	Laser Cut		$ 0.01	cm	65.96	Material - Aluminium	1	$ 0.66
30	Sheet metal bends		$ 0.25	bend	1			$ 0.25
40	Drilled holes < 25.4 mm dia.		$ 0.35	hole	2			$ 0.70
							Sub Total	**$ 2.91**

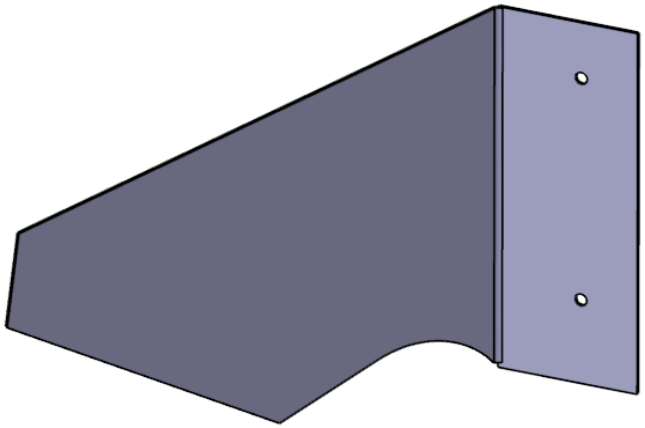

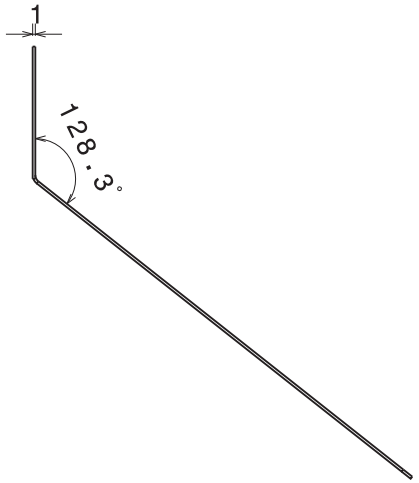

Vue de face
Echelle : 1:2

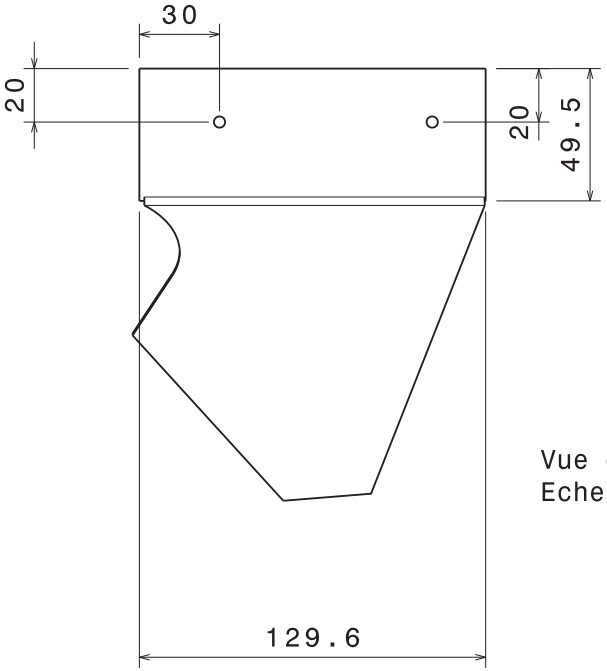

Vue de gauche
Echelle : 1:2

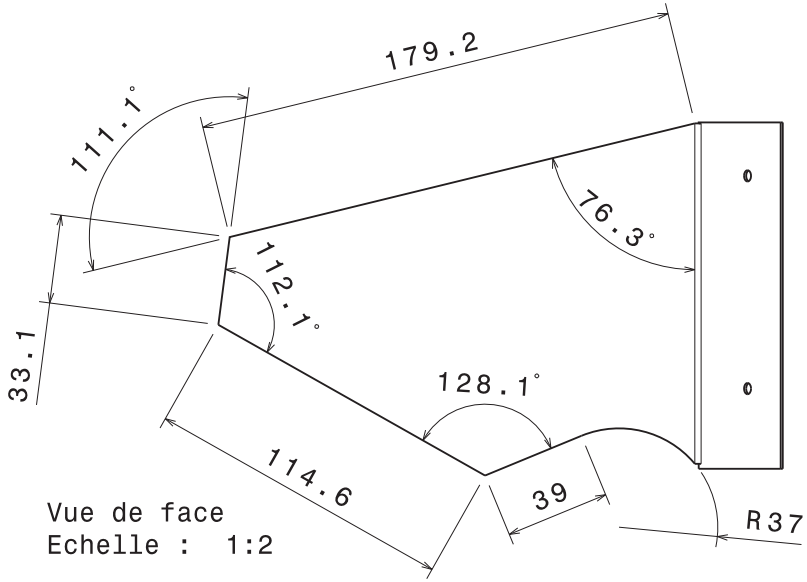

Vue de face
Echelle : 1:2

Tolérances générales ISO 268-mK

Taille A3		Ecurie Piston Sport Auto
Dessiné par Clément BOURQUARD	Date 15/02/2014	Désignation plaque ppf arriere droite
Coordonnées 06 33 03 95 75 clement.bourquard@ecl2015.ec-lyon.fr		Quantité 1 / Matériau Aluminium / Version v2.0
Date de livraison souhaitée 19/02/2014		Echelle 1:2 / Numéro du plan 14M131 / Feuille 1/1

University	Ecole Centrale de Lyon			**Car #**	81	**Part Cost**	$ 3.27
System	Miscellaneous	**FileLink1**				**Qty**	1
Assembly	Firewall	**FileLink2**		**FileLink1**			
Part	Firewall rear left plate	**FileLink3**		**FileLink2**		**Extended Cost**	$ 3.27
P/N Base	01003			**FileLink3**			
Suffix	AA						
Details							

ItemOrder	Material	Use	UnitCost	Size1	Unit1	Size2	Unit2	Area Name	Area	Length	Density	Quantity	Sub Total
10	Aluminium, Normal	Material for part	$ 4.20	0.232	m	0.135	m	Rectangular 232 mm x 135 mm	0.03132	0.001	2,710.00	1	$ 0.36
												Sub Total	**$ 0.36**

ItemOrder	Process	Use	UnitCost	Unit	Quantity	Multiplier	Mult. Val.	Sub Total
10	Machining Setup, Install and remove	Setup for laser cut	1.3		1			$ 1.30
20	Laser Cut		$ 0.01	cm	65.96	Material - Aluminium	1	$ 0.66
30	Sheet metal bends		$ 0.25	bend	1			$ 0.25
40	Drilled holes < 25.4 mm dia.		$ 0.35	hole	2			$ 0.70
							Sub Total	**$ 2.91**

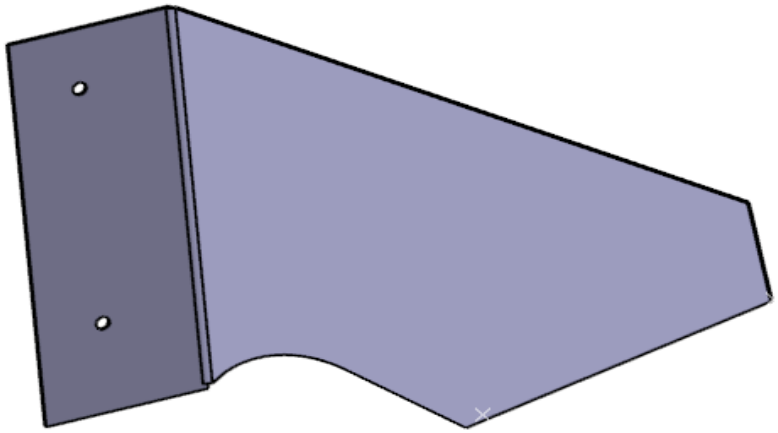

University	Ecole Centrale de Lyon			**Car #**	81	**Part Cost**	$ 9.05
System	Miscellaneous	**FileLink1**				**Qty**	1
Assembly	Firewall	**FileLink2**		**FileLink1**			
Part	Firewall right plate	**FileLink3**		**FileLink2**		**Extended Cost**	$ 9.05
P/N Base	01004			**FileLink3**			
Suffix	AA						
Details							

ItemOrder	Material	Use	UnitCost	Size1	Unit1	Size2	Unit2	Area Name	Area	Length	Density	Quantity	Sub Total
10	Aluminium, Normal	Material for part	$ 4.20	0.457	m	0.38	m	Rectangular 457 mm x 380 mm	0.17366	0.001	2,710.00	1	$ 1.98
												Sub Total	**$ 1.98**

ItemOrder	Process	Use	UnitCost	Unit	Quantity	Multiplier	Mult. Val.	Sub Total
10	Machining Setup, Install and remove	Setup for laser cut	1.3		1			$ 1.30
20	Laser Cut		$ 0.01	cm	167.13	Material - Aluminium	1	$ 1.67
30	Sheet metal bends		$ 0.25	bend	1			$ 0.25
40	Drilled holes < 25.4 mm dia.		$ 0.35	hole	11			$ 3.85
							Sub Total	**$ 7.07**

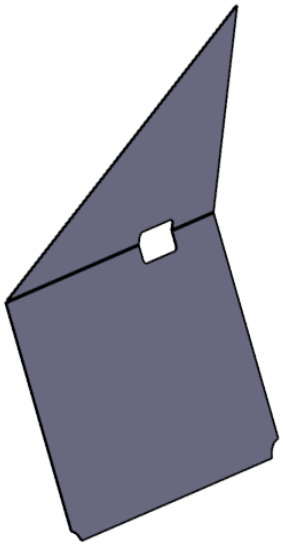

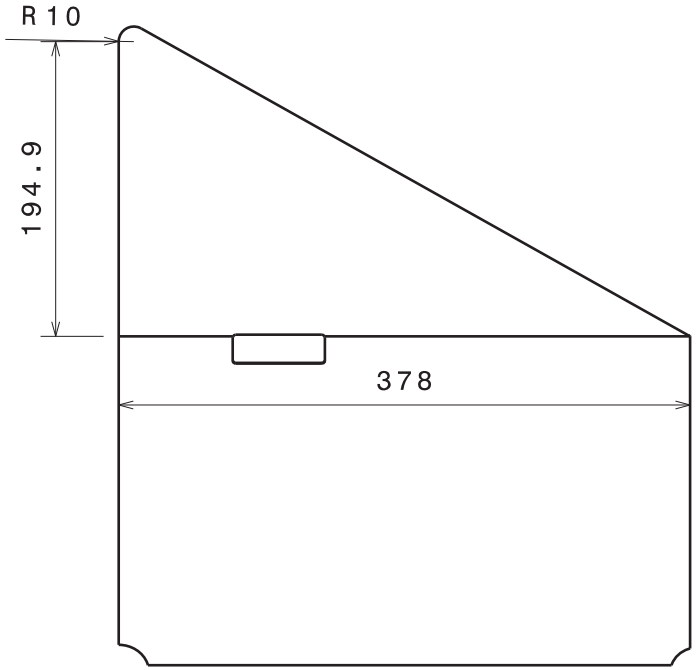

Vue de face
Echelle : 1:5

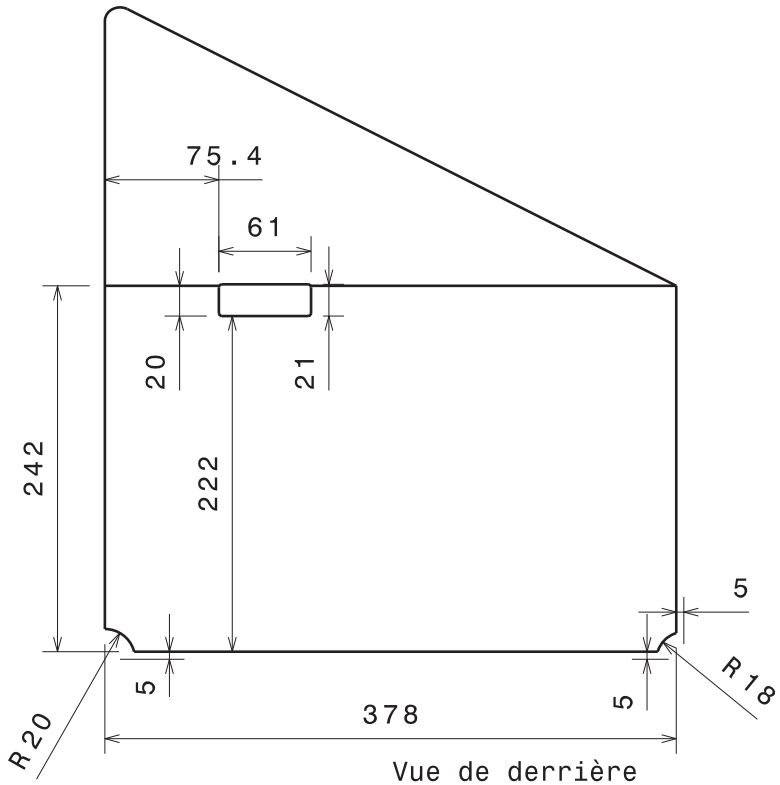

Vue de derrière
Echelle : 1:5

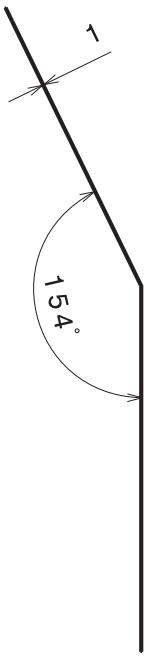

Vue de droite
Echelle : 1:5

Tolérance générale ISO 2768-mK

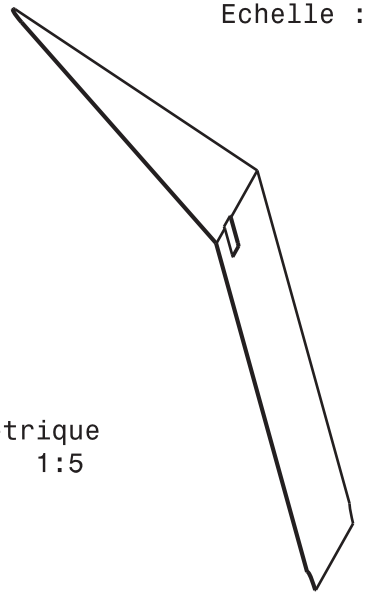

Vue isométrique
Echelle : 1:5

Taille A4		Ecurie Piston Sport Auto
Dessiné par Clément BOURQUARD	Date 09/02/2014	Désignation Plaque ppf Droite
Coordonnées 06 33 03 95 75 clement.bourquard@ecl2015.ec-lyon.fr		Quantité 1 / Matériau Aluminium / Version v1.0
Date de livraison souhaitée 13/02/2014		Echelle 1:5 / Numéro du plan 14M129 / Feuille 1/1

University	Ecole Centrale de Lyon			**Car #**	81	**Part Cost**	$ 9.05
System	Miscellaneous	**FileLink1**				**Qty**	1
Assembly	Firewall	**FileLink2**		**FileLink1**			
Part	Firewall left plate	**FileLink3**		**FileLink2**		**Extended Cost**	$ 9.05
P/N Base	01005			**FileLink3**			
Suffix	AA						
Details							

ItemOrder	Material	Use	UnitCost	Size1	Unit1	Size2	Unit2	Area Name	Area	Length	Density	Quantity	Sub Total
10	Aluminium, Normal	Material for part	$ 4.20	0.457	m	0.38	m	Rectangular 457 mm x 380 mm	0.17366	0.001	2,710.00	1	$ 1.98
												Sub Total	**$ 1.98**

ItemOrder	Process	Use	UnitCost	Unit	Quantity	Multiplier	Mult. Val.	Sub Total
10	Machining Setup, Install and remove	Setup for laser cut	1.3		1			$ 1.30
20	Laser Cut		$ 0.01	cm	167.13	Material - Aluminium	1	$ 1.67
30	Sheet metal bends		$ 0.25	bend	1			$ 0.25
40	Drilled holes < 25.4 mm dia.		$ 0.35	hole	11			$ 3.85
							Sub Total	**$ 7.07**

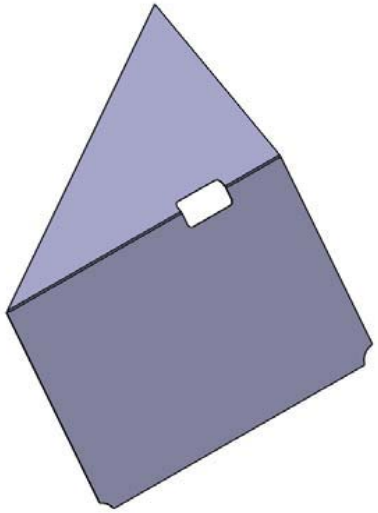

University	Ecole Centrale de Lyon			**Car #**	81	**Part Cost**	$ 2.93
System	Miscellaneous	**FileLink1**				**Qty**	1
Assembly	Firewall	**FileLink2**		**FileLink1**			
Part	Firewall pass through plate 1	**FileLink3**		**FileLink2**		**Extended Cost**	$ 2.93
P/N Base	01006			**FileLink3**			
Suffix	AA						
Details							

ItemOrder	Material	Use	UnitCost	Size1	Unit1	Size2	Unit2	Area Name	Area	Length	Density	Quantity	Sub Total
10	Aluminium, Normal	Material for part	$ 4.20	0.185	m	0.147	m	Rectangular 185 mm x 147 mm	0.02720	0.001	2,710.00	1	$ 0.31
												Sub Total	**$ 0.31**

ItemOrder	Process	Use	UnitCost	Unit	Quantity	Multiplier	Mult. Val.	Sub Total
10	Machining Setup, Install and remove	Setup for laser cut	1.3		1			$ 1.30
20	Laser Cut		$ 0.01	cm	62.48	Material - Aluminium	1	$ 0.62
30	Drilled holes < 25.4 mm dia.		$ 0.35	hole	2			$ 0.70
							Sub Total	**$ 2.62**

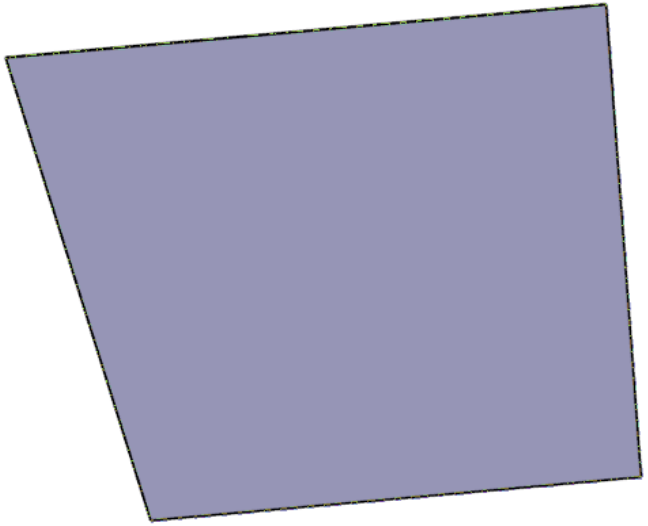

University	Ecole Centrale de Lyon			**Car #**	81	**Part Cost**	$ 3.22
System	Miscellaneous	**FileLink1**				**Qty**	1
Assembly	Firewall	**FileLink2**		**FileLink1**			
Part	Firewall pass through plate 2	**FileLink3**		**FileLink2**		**Extended Cost**	$ 3.22
P/N Base	01007			**FileLink3**			
Suffix	AA						
Details							

ItemOrder	Material	Use	UnitCost	Size1	Unit1	Size2	Unit2	Area Name	Area	Length	Density	Quantity	Sub Total
10	Aluminium, Normal	Material for part	$ 4.20	0.228	m	0.166	m	Rectangular 228 mm x 166 mm	0.037848	0.0015	2,710.00	1	$ 0.65
												Sub Total	**$ 0.65**

ItemOrder	Process	Use	UnitCost	Unit	Quantity	Multiplier	Mult. Val.	Sub Total
10	Machining Setup, Install and remove	Setup for laser cut	1.3		1			$ 1.30
20	Laser Cut		$ 0.01	cm	77.85	Material - Aluminium	1	$ 0.78
30	Sheet metal bends		$ 0.25	bend	2			$ 0.50
							Sub Total	**$ 2.58**

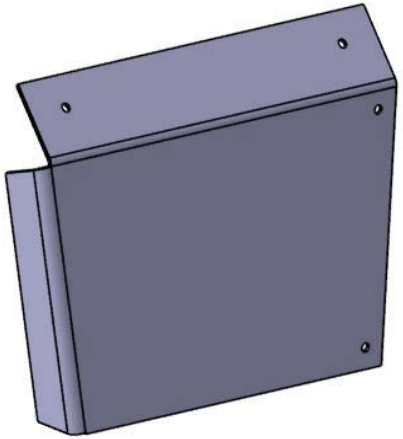

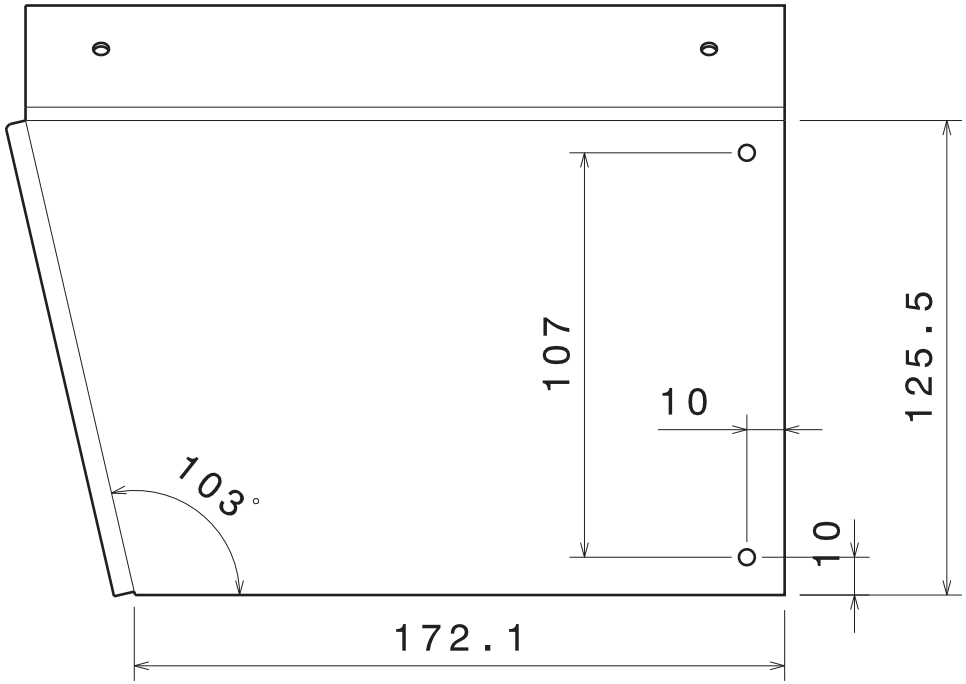

Vue de face
Echelle : 1:2

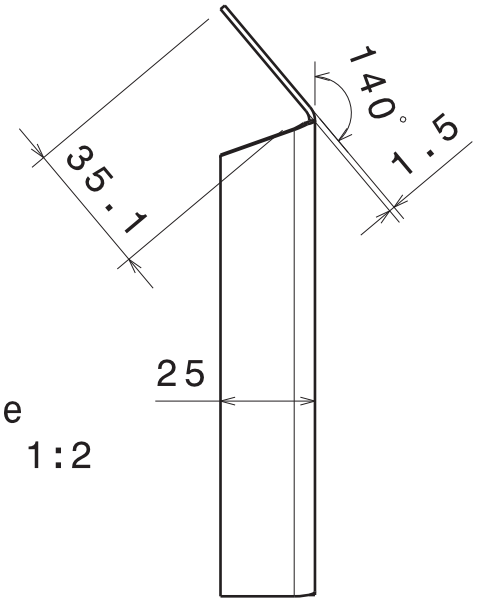

Vue de gauche
Echelle : 1:2

Vue de dessus
Echelle : 1:2

Tolérances générales ISO 2768-mK

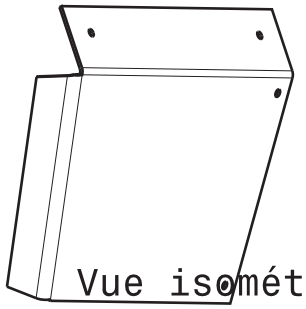

Vue isométrique
Echelle : 1:4

Taille A4		Ecurie Piston Sport Auto
Dessiné par Clément BOURQUARD	Date 09/02/2014	Désignation Plaque ppf passe cable 2
Coordonnées 06 33 03 95 75 clement.bourquard@ecl2015.ec-lyon.fr		Quantité 1 / Matériau Aluminium / Version v1.0
Date de livraison souhaitée 13/02/2014		Echelle 1:2 / Numéro du plan 14M134 / Feuille 1/1

280

University	Ecole Centrale de Lyon			**Car #**	81	**Part Cost**	$ 1.03
System	Miscellaneous	**FileLink1**				**Qty**	2
Assembly	Firewall	**FileLink2**		**FileLink1**			
Part	Tab 1	**FileLink3**		**FileLink2**		**Extended Cost**	$ 2.06
P/N Base	01008			**FileLink3**			
Suffix	AA						
Details							

ItemOrder	Material	Use	UnitCost	Size1	Unit1	Size2	Unit2	Area Name	Area	Length	Density	Quantity	Sub Total
10	Steel,Mild	Material for part	$ 2.25	0.035	m	0.03	m	Rectangular 35 mm x 30 mm	0.00105	0.0015	7,860.00	1	$ 0.03
												Sub Total	**$ 0.03**

ItemOrder	Process	Use	UnitCost	Unit	Quantity	Multiplier	Mult. Val.	Sub Total
10	Machining Setup, Install and remove	Setup for laser cut	1.3		1	2 parts cut from a single machine setup	0.5	$ 0.65
20	Laser Cut		$ 0.01	cm	11.75	Material - Steel	3	$ 0.35
							Sub Total	**$ 1.00**

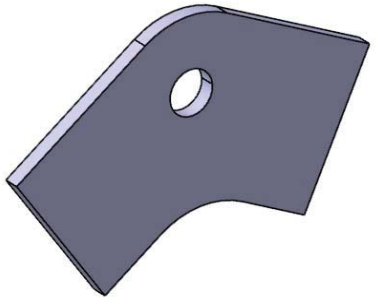

University	Ecole Centrale de Lyon			**Car #**	81	**Part Cost**	$ 1.04
System	Miscellaneous	**FileLink1**				**Qty**	2
Assembly	Firewall	**FileLink2**		**FileLink1**			
Part	Tab 2	**FileLink3**		**FileLink2**		**Extended Cost**	$ 2.09
P/N Base	01009			**FileLink3**			
Suffix	AA						
Details							

ItemOrder	Material	Use	UnitCost	Size1	Unit1	Size2	Unit2	Area Name	Area	Length	Density	Quantity	Sub Total
10	Steel,Mild	Material for part	$ 2.25	0.035	m	0.03	m	Rectangular 35 mm x 30 mm	0.00105	0.0015	7,860.00	1	$ 0.03
												Sub Total	**$ 0.03**

ItemOrder	Process	Use	UnitCost	Unit	Quantity	Multiplier	Mult. Val.	Sub Total
10	Machining Setup, Install and remove	Setup for laser cut	1.3		1	2 parts cut from a single machine setup	0.5	$ 0.65
20	Laser Cut		$ 0.01	cm	12.22	Material - Steel	3	$ 0.37
							Sub Total	**$ 1.02**

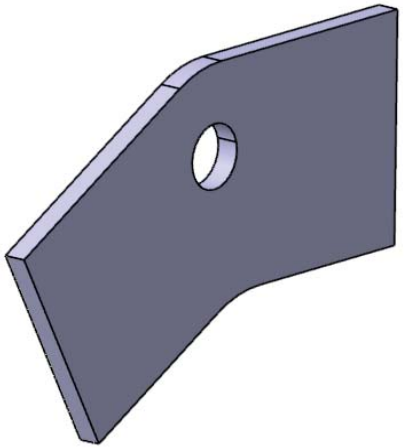

University	Ecole Centrale de Lyon			**Car #**	81	**Part Cost**	$ 0.70
System	Miscellaneous	**FileLink1**				**Qty**	4
Assembly	Firewall	**FileLink2**		**FileLink1**			
Part	Tab 3-4	**FileLink3**		**FileLink2**		**Extended Cost**	$ 2.80
P/N Base	01010			**FileLink3**			
Suffix	AA						
Details							

ItemOrder	Material	Use	UnitCost	Size1	Unit1	Size2	Unit2	Area Name	Area	Length	Density	Quantity	Sub Total
10	Steel,Mild	Material for part	$ 2.25	0.035	m	0.03	m	Rectangular 35 mm x 30 mm	0.00105	0.0015	7,860.00	1	$ 0.03
												Sub Total	**$ 0.03**

ItemOrder	Process	Use	UnitCost	Unit	Quantity	Multiplier	Mult. Val.	Sub Total
10	Machining Setup, Install and remove	Setup for laser cut	1.3		1	4 parts cut from a single machine setup	0.25	$ 0.33
20	Laser Cut		$ 0.01	cm	11.57	Material - Steel	3	$ 0.35
							Sub Total	**$ 0.67**

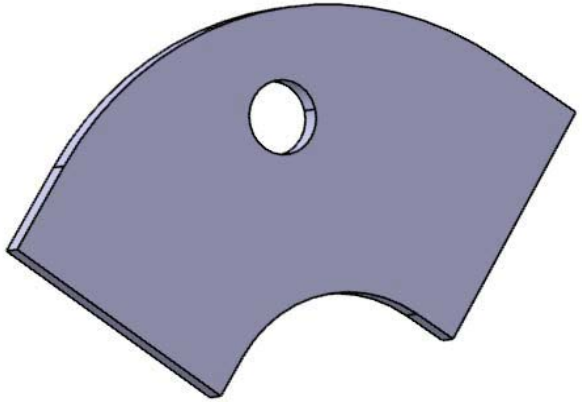

University	Ecole Centrale de Lyon			**Car #**	81	**Part Cost**	$ 0.71
System	Miscellaneous	**FileLink1**				**Qty**	2
Assembly	Firewall	**FileLink2**		**FileLink1**			
Part	Tab 5-9	**FileLink3**		**FileLink2**		**Extended Cost**	$ 1.41
P/N Base	01011			**FileLink3**			
Suffix	AA						
Details							

ItemOrder	Material	Use	UnitCost	Size1	Unit1	Size2	Unit2	Area Name	Area	Length	Density	Quantity	Sub Total
10	Steel,Mild	Material for part	$ 2.25	0.035	m	0.03	m	Rectangular 35 mm x 30 mm	0.00105	0.0015	7,860.00	1	$ 0.03
												Sub Total	**$ 0.03**

ItemOrder	Process	Use	UnitCost	Unit	Quantity	Multiplier	Mult. Val.	Sub Total
10	Machining Setup, Install and remove	Setup for laser cut	1.3		1	4 parts cut from a single machine setup	0.25	$ 0.33
20	Laser Cut		$ 0.01	cm	11.77	Material - Steel	3	$ 0.35
							Sub Total	**$ 0.68**

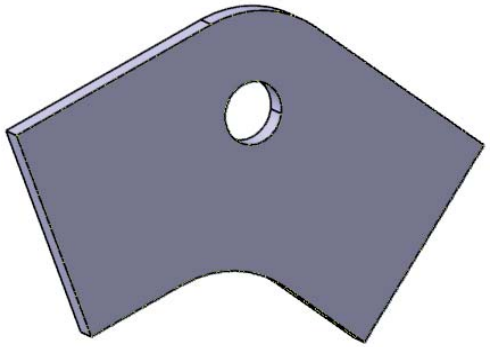

University	Ecole Centrale de Lyon			**Car #**	81	**Part Cost**	$ 0.70
System	Miscellaneous	**FileLink1**				**Qty**	4
Assembly	Firewall	**FileLink2**		**FileLink1**			
Part	Tab 6	**FileLink3**		**FileLink2**		**Extended Cost**	$ 2.80
P/N Base	01012			**FileLink3**			
Suffix	AA						
Details							

ItemOrder	Material	Use	UnitCost	Size1	Unit1	Size2	Unit2	Area Name	Area	Length	Density	Quantity	Sub Total
10	Steel,Mild	Material for part	$ 2.25	0.035	m	0.03	m	Rectangular 35 mm x 30 mm	0.00105	0.0015	7,860.00	1	$ 0.03
												Sub Total	**$ 0.03**

ItemOrder	Process	Use	UnitCost	Unit	Quantity	Multiplier	Mult. Val.	Sub Total
10	Machining Setup, Install and remove	Setup for laser cut	1.3		1	4 parts cut from a single machine setup	0.25	$ 0.33
20	Laser Cut		$ 0.01	cm	11.57	Material - Steel	3	$ 0.35
							Sub Total	**$ 0.67**

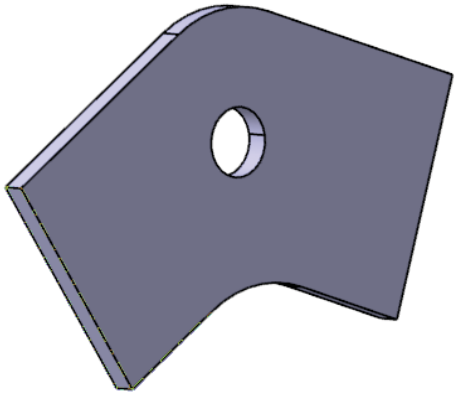

University	Ecole Centrale de Lyon			**Car #**	81	**Part Cost**	$ 0.71
System	Miscellaneous	**FileLink1**				**Qty**	4
Assembly	Firewall	**FileLink2**		**FileLink1**			
Part	Tab 7	**FileLink3**		**FileLink2**		**Extended Cost**	$ 2.85
P/N Base	01013			**FileLink3**			
Suffix	AA						
Details							

ItemOrder	Material	Use	UnitCost	Size1	Unit1	Size2	Unit2	Area Name	Area	Length	Density	Quantity	Sub Total
10	Steel,Mild	Material for part	$ 2.25	0.035	m	0.03	m	Rectangular 35 mm x 30 mm	0.00105	0.0015	7,860.00	1	$ 0.03
												Sub Total	**$ 0.03**

ItemOrder	Process	Use	UnitCost	Unit	Quantity	Multiplier	Mult. Val.	Sub Total
10	Machining Setup, Install and remove	Setup for laser cut	1.3		1	4 parts cut from a single machine setup	0.25	$ 0.33
20	Laser Cut		$ 0.01	cm	11.98	Material - Steel	3	$ 0.36
							Sub Total	**$ 0.68**

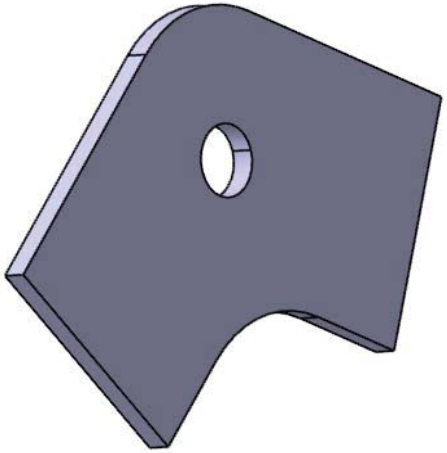

University	Ecole Centrale de Lyon			**Car #**	81	**Part Cost**	$ 0.64
System	Miscellaneous	**FileLink1**				**Qty**	4
Assembly	Firewall	**FileLink2**		**FileLink1**			
Part	Tab 8	**FileLink3**		**FileLink2**		**Extended Cost**	$ 2.57
P/N Base	01014			**FileLink3**			
Suffix	AA						
Details							

ItemOrder	Material	Use	UnitCost	Size1	Unit1	Size2	Unit2	Area Name	Area	Length	Density	Quantity	Sub Total
10	Steel,Mild	Material for part	$ 2.25	0.035	m	0.03	m	Rectangular 35 mm x 30 mm	0.00105	0.0015	7,860.00	1	$ 0.03
												Sub Total	**$ 0.03**

ItemOrder	Process	Use	UnitCost	Unit	Quantity	Multiplier	Mult. Val.	Sub Total
10	Machining Setup, Install and remove	Setup for laser cut	1.3		1	4 parts cut from a single machine setup	0.25	$ 0.33
20	Laser Cut		$ 0.01	cm	9.68	Material - Steel	3	$ 0.29
							Sub Total	**$ 0.62**

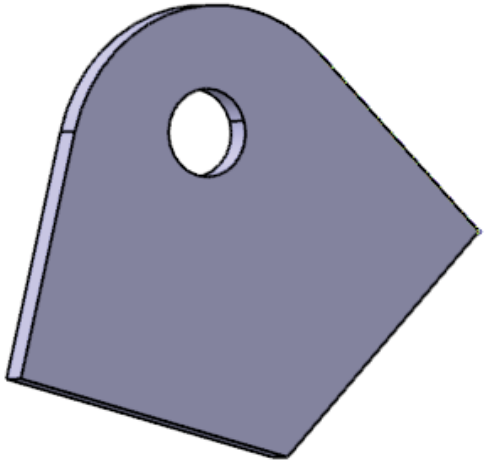

University	Ecole Centrale de Lyon			**Car #**	81	**Part Cost**	$ 7.50
System	Miscellaneous	**FileLink1**				**Qty**	1
Assembly	Firewall	**FileLink2**		**FileLink1**			
Part	Tab 10	**FileLink3**		**FileLink2**		**Extended Cost**	$ 7.50
P/N Base	01015			**FileLink3**			
Suffix	AA						
Details							

ItemOrder	Material	Use	UnitCost	Size1	Unit1	Size2	Unit2	Area Name	Area	Length	Density	Quantity	Sub Total
10	Steel,Mild	Material for part	$ 2.25	0.565	m	0.074	m	Rectangular 565 mm x 74 mm	0.04181	0.0015	7,860.00	1	$ 1.11
												Sub Total	**$ 1.11**

ItemOrder	Process	Use	UnitCost	Unit	Quantity	Multiplier	Mult. Val.	Sub Total
10	Machining Setup, Install and remove	Setup for laser cut	1.3		1			$ 1.30
20	Laser Cut		$ 0.01	cm	161.2	Material - Steel	3	$ 4.84
30	Sheet metal bends		$ 0.25	bend	1			$ 0.25
							Sub Total	**$ 6.39**

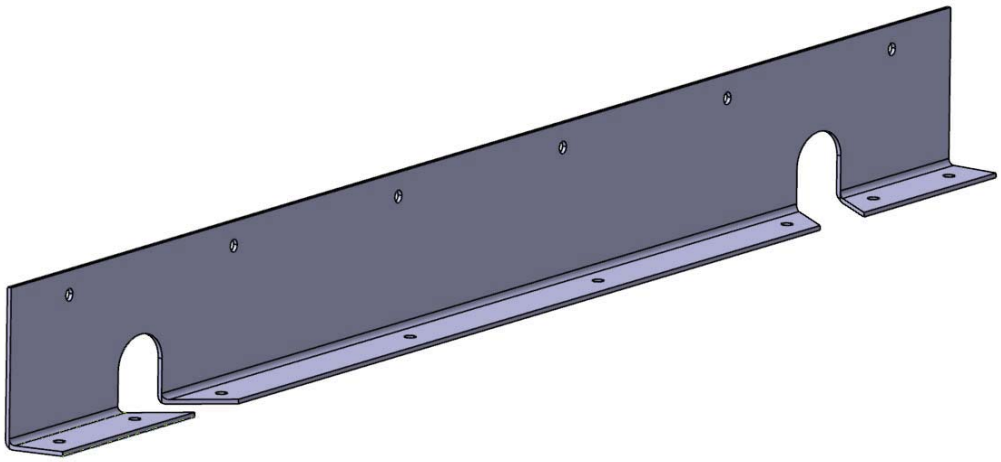

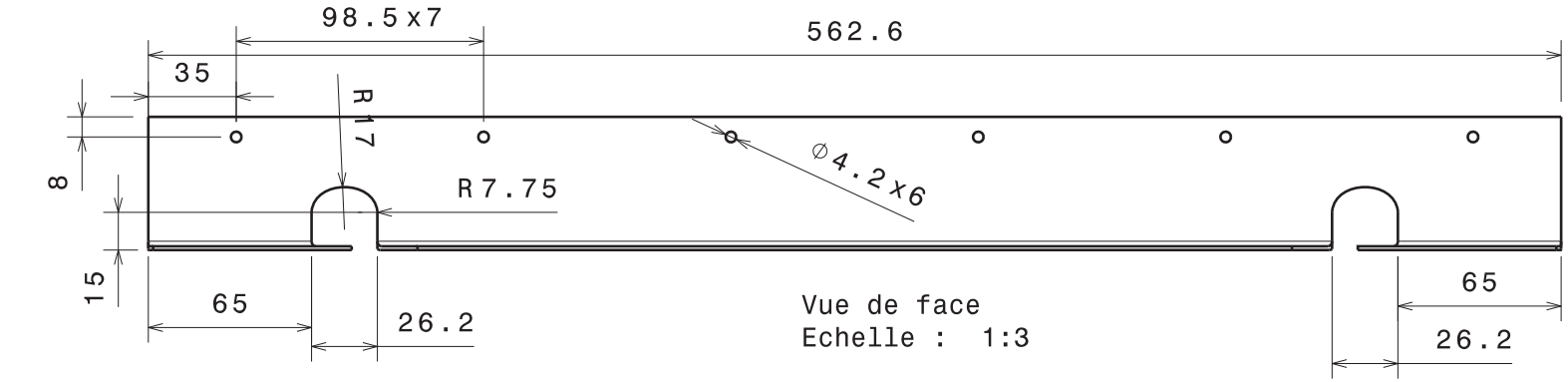

Vue de face
Echelle : 1:3

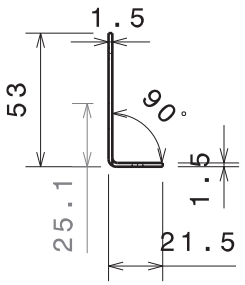

Vue de gauche
Echelle : 1:3

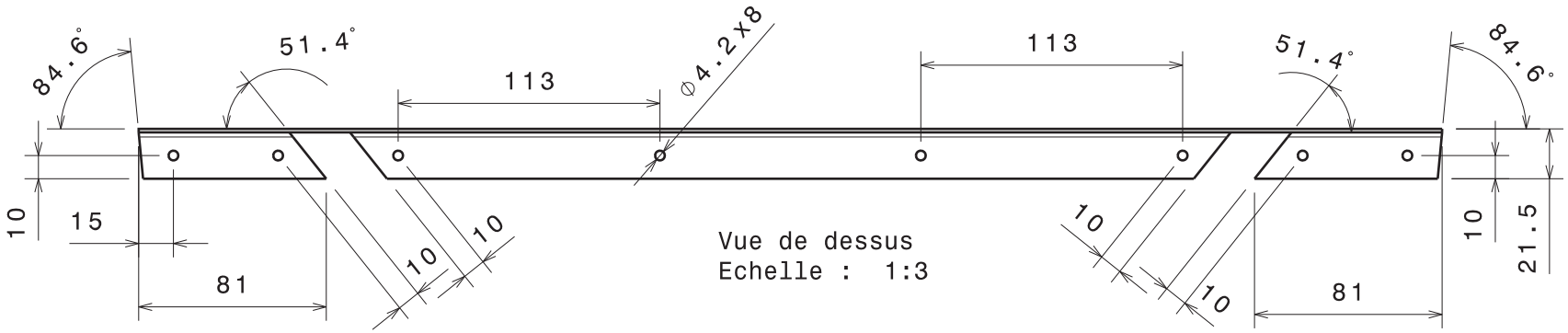

Vue de dessus
Echelle : 1:3

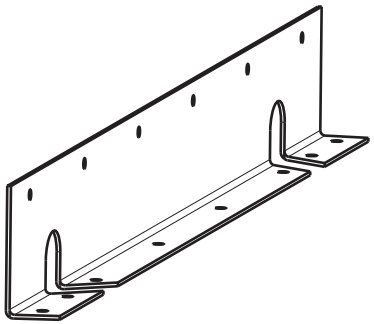

Vue isométrique
Echelle : 1:3

Tolérances générales ISO 2768-mK

Taille A4		Ecurie Piston Sport Auto
Dessiné par Clément BOURQUARD	Date 15/01/2014	Désignation chape ppf 10
Coordonnées 06 33 03 95 75 clement.bourquard@ecl2015.ec-lyon.fr		Quantité 1 / Matériau Acier S235 / Version v1.0
Date de livraison souhaitée 30/01/2014		Echelle 1:3 / Numéro du plan 14M095 / Feuille 1/1

University	Ecole Centrale de Lyon	**Car #**	81	**Asm Cost**	$ 58.41
System	Miscellaneous			**Qty**	1
Assembly	Harness	**FileLink1**			
P/N Base	A0002	**FileLink2**		**Extended Cost**	$ 58.41
Suffix	AA	**FileLink3**			
Details	Driver harness assembly				

ItemOrder	Part	Part Cost	Quantity	Sub Total
10	Harness tab	$ 1.78	2	$ 3.57
			Sub Total	**$ 3.57**

ItemOrder	Material	Use	UnitCost	Size1	Unit1	Size2	Unit2	Area Name	Area	Length	Density	Quantity	Sub Total
10	Harness, Driver	6-point safety harness	$ 45.00									1	$ 45.00
												Sub Total	**$ 45.00**

ItemOrder	Process	Use	UnitCost	Unit	Quantity	Multiplier	Mult. Val.	Sub Total
10	Weld	Weld harness tab to frame	$ 0.15	cm	6		1	$ 0.90
20	Assemble, 1kg, Loose	Assemble eyebolts	$ 0.06		2		1	$ 0.12
30	Wrench <= 25.4 mm	Tighten eyebolts	$ 1.50		2		1	$ 3.00
40	Reaction Tool <= 25,4mm	Tighten eyebolts	$ 0.25		2		1	$ 1.50
50	Assemble, 3kg, Loose	Assemble harness	$ 0.19		1		1	$ 0.19
							Sub Total	**$ 5.71**

ItemOrder	Fastener	Use	UnitCost	Size1	Unit1	Size2	Unit2	Quantity	Sub Total
10	Eyebolt	Attach harness	$ 1.59					2	$ 3.18
20	Nut, Grade 8.8 (SAE 5)	Attach harness	$ 0.10					2	$ 0.20
30	Washer, Grade AN	Attach harness	$ 0.04					2	$ 0.09
								Sub Total	**$ 3.47**

ItemOrder	Tooling	Use	UnitCost	Unit	Quantity	PVF	FractionIncluded	Sub Total
10	Welds - Welding Fixture	Harness tab	$ 500.00	point	4	3000	1	$ 0.67
							Sub Total	**$ 0.67**

University	Ecole Centrale de Lyon			**Car #**	81	**Part Cost**	$ 1.78
System	Miscellaneous	**FileLink1**				**Qty**	2
Assembly	Harness	**FileLink2**		**FileLink1**			
Part	Harness tab	**FileLink3**		**FileLink2**		**Extended Cost**	$ 3.57
P/N Base	02001			**FileLink3**			
Suffix	AA						
Details	Steel tab for harness eyebolt						

ItemOrder	Material	Use	UnitCost	Size1	Unit1	Size2	Unit2	Area Name	Area	Length	Density	Quantity	Sub Total
10	Steel, Mild	Material for tab	$ 2.25	0.025	m	0.03	m	Ractangular area 25 mm x 30mm	7.50E-04	0.01	7,800.00	4.50E-06	$ 0.08
												Sub Total	**$ 0.08**

ItemOrder	Process	Use	UnitCost	Unit	Quantity	Multiplier	Mult. Val.	Sub Total
10	Machining Setup, Install and remove	Install and remove part from laser machine	$ 1.30	unit	1	2 parts cut from a single machine setup	0.5	$ 1.30
20	Laser cut	Cutout shape and hole	$ 0.01	cm	13.5	Material - Steel	3	$ 0.41
							Sub Total	**$ 1.71**

Vue de face
Echelle : 1:1

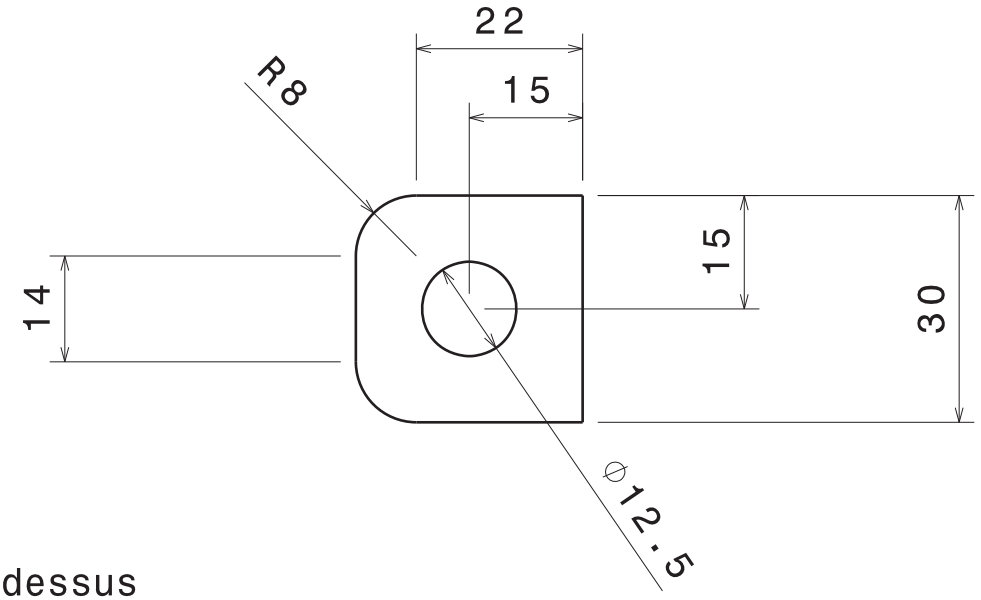

Vue de dessus
Echelle : 1:1

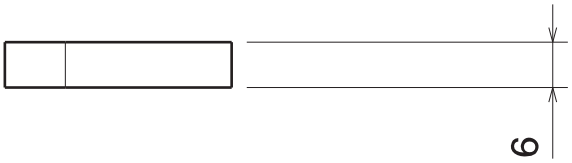

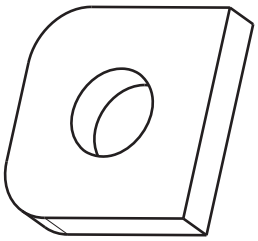

Vue isométrique
Echelle : 1:1

Acier laissé libre eu fabricant

Casser les angles vifs

Tolérances générales ISO 2768 - mK

Taille A4		Ecurie Piston Sport Auto	
Dessiné par Prunier Ludovic	Date 21/11/2013	Désignation Chape latérale harnais	
Coordonnées 06.31.80.81.08 ludovic.prunier@ecl2015.ec-lyon.fr		Quantité 2	Matériau Acier	Version v1.0
Vérifié par	Date	Echelle 1:1	Numéro du plan 14 M016	Feuille 1/1

University	Ecole Centrale de Lyon	Car #	81	Asm Cost	$ 30.27
System	Miscellaneous			Qty	1
Assembly	Headrest	FileLink1			
P/N Base	A0003	FileLink2		Extended Cost	$ 30.27
Suffix	AA	FileLink3			
Details	Headrest assembly				

ItemOrder	Part	Part Cost	Quantity	Sub Total
10	Headrest back plate	$ 4.41	1	$ 4.41
20	Side tab	$ 1.76	2	$ 3.52
30	Bottom tab	$ 1.73	1	$ 1.73
40	Upper plate	$ 5.42	1	$ 5.42
50	Bottom plate	$ 3.47	1	$ 3.47
			Sub Total	**$ 18.55**

ItemOrder	Material	Use	UnitCost	Size1	Unit1	Size2	Unit2	Area Name	Area	Length	Density	Quantity	Sub Total
10	Head Rest Padding	Headrest foam padding	$ 0.005	264	cm^3							1	$ 1.32
20	Fabric	Imitation leather fabric to cover headrest	$ 2.50	0.1	m^2							1	$ 0.25
30	Adhesive	Glue headrest padding to plate, cost included in process	$ -										$ -
												Sub Total	**$ 1.32**

ItemOrder	Process	Use	UnitCost	Unit	Quantity	Multiplier	Mult. Val.	Sub Total
10	Weld	Weld tabs to frame	$ 0.15	cm	12		1	$ 1.80
20	Assemble, 1kg, Loose	Assemble plate	$ 0.06		2		1	$ 0.12
30	Ratchet <= 6,35mm	Bolt plate to tab	$ 0.50		6		1	$ 3.00
40	Reaction Tool <= 6,35mm	Bolt plate to tab	$ 0.25		6		1	$ 1.50
50	Assemble, 1kg, Loose	Put support in position	$ 0.06		1		1	$ 0.06
60	Assemble, 1kg, Loose	Assemble bolts	$ 0.06		4		1	$ 0.24
70	Ratchet <= 6,35mm	Bolt plates to tab	$ 0.50		4		1	$ 2.00
80	Reaction Tool <= 6,35mm	Reaction tool for nuts	$ 0.25		4		1	$ 1.00
90	Cut (scissors, knife)	Cut headrest padding	$ 0.06	cm	107.3			$ 6.44
100	Cut (scissors, knife)	Cut headrest fabric	$ 0.06	cm	128.4			$ 7.70
110	Riveting	Headrest fabric	$ 0.25	unit	15		1	$ 3.75
120	Brush Apply	Glue foam to plate	$ 0.02	cm^2	315		1	$ 6.30
130	Assemble, 1kg, Line-on-line	Glue foam to plate	$ 0.13		1		1	$ 0.13
140	Assemble, 1kg, Line-on-line	Assemble fabric onto headrest	$ 0.13		1		1	$ 0.13
							Sub Total	**$ 9.72**

ItemOrder	Fastener	Use	UnitCost	Size1	Unit1	Size2	Unit2	Quantity	Sub Total
10	Bolt, Grade 8.8 (SAE 5)	assemble side plate to side fixing	$ 0.04	6	mm	16	mm	4	$ 0.16
20	Bolt, Grade 8.8 (SAE 5)	assemble bottom plate to bottom fixing	$ 0.04	6	mm	16	mm	2	$ 0.08
30	Bolt, Grade 8.8 (SAE 5)	assemble support to plates	$ 0.04	6	mm	16	mm	4	$ 0.16
40	Nut, Grade 8.8 (SAE 5)	For bolts	$ 0.03	6	mm			10	$ 0.30
50	Washer, Grade AN		$ 0.02	6	mm			20	$ 0.30
								Sub Total	**$ 1.00**

ItemOrder	Tooling	Use	UnitCost	Unit	Quantity	PVF	FractionIncluded	Sub Total
10	Welds - Welding Fixture	Weld tabs to frame	$ 500.00	point	6	3000	1	$ 1.00
							Sub Total	**$ 1.00**

University	Ecole Centrale de Lyon			**Car #**	81	**Part Cost**	$ 4.41
System	Miscellaneous	**FileLink1**				**Qty**	1
Assembly	Headrest	**FileLink2**		**FileLink1**			
Part	Headrest back plate	**FileLink3**		**FileLink2**		**Extended Cost**	$ 4.41
P/N Base	03001			**FileLink3**			
Suffix	AA						
Details							

ItemOrder	Material	Use	UnitCost	Size1	Unit1	Size2	Unit2	Area Name	Area	Length	Density	Quantity	Sub Total
10	Aluminum, Normal (per kg)	Support	$ 4.20	0.29	m	0.28	m	Rectangular area 29mm x 280mm	8.12E-02	2.00E-03	2,700.00	4.38E-01	$ 1.84
												Sub Total	**$ 1.84**

ItemOrder	Process	Use	UnitCost	Unit	Quantity	Multiplier	Mult. Val.	Sub Total
10	Machining Setup, Install and remove	Setup for laser cutting	$ 1.30		1			$ 1.30
20	Laser Cut	Cuout shape and holes	$ 0.01	cm	126.9	Material - Aluminum	1	$ 1.27
							Sub Total	**$ 2.57**

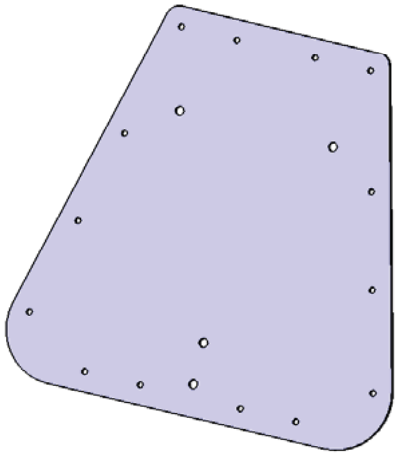

University	Ecole Centrale de Lyon			**Car #**	81	**Part Cost**	$ 0.88
System	Miscellaneous	**FileLink1**				**Qty**	2
Assembly	Headrest	**FileLink2**		**FileLink1**			
Part	Side tab	**FileLink3**		**FileLink2**		**Extended Cost**	$ 1.76
P/N Base	03002			**FileLink3**			
Suffix	AA						
Details							

ItemOrder	Material	Use	UnitCost	Size1	Unit1	Size2	Unit2	Area Name	Area	Length	Density	Quantity	Sub Total
10	Steel, Mild	Material for part	$ 2.25	0.0735	m	0.02	m	Rectangular area 73,5mm x 20mm	1.47E-03	3.00E-03	7,800.00	4.41E-06	$ 0.08
												Sub Total	**$ 0.08**

ItemOrder	Process	Use	UnitCost	Unit	Quantity	Multiplier	Mult. Val.	Sub Total
10	Machining Setup, Install and remove	Setup for laser cutting	$ 1.30		1	2 parts cut from a single machine setup	0.5	$ 0.65
20	Laser Cut	Cuout shape and holes	$ 0.01	cm	5.1	Material - Steel	3	$ 0.15
							Sub Total	**$ 0.80**

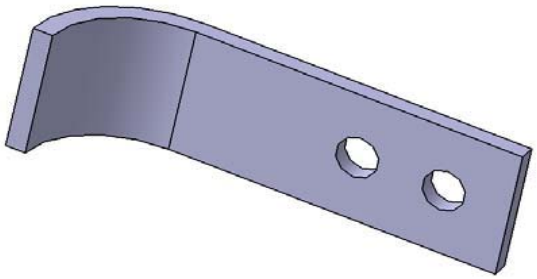

University	Ecole Centrale de Lyon			**Car #**	81	**Part Cost**	$ 1.73
System	Miscellaneous	**FileLink1**				**Qty**	1
Assembly	Headrest	**FileLink2**		**FileLink1**			
Part	Bottom tab	**FileLink3**		**FileLink2**		**Extended Cost**	$ 1.73
P/N Base	03003			**FileLink3**			
Suffix	AA						
Details							

ItemOrder	Material	Use	UnitCost	Size1	Unit1	Size2	Unit2	Area Name	Area	Length	Density	Quantity	Sub Total
10	Steel, Mild	Material for part	$ 2.25	0.06	m	0.06	m	Rectangular area 60mm x 60mm	3.60E-03	3.00E-03	7,800.00	1.08E-05	$ 0.19
												Sub Total	**$ 0.19**

ItemOrder	Process	Use	UnitCost	Unit	Quantity	Multiplier	Mult. Val.	Sub Total
10	Machining Setup, Install and remove	Setup for laser cutting	$ 1.30		1			$ 1.30
20	Laser Cut	Cuout shape and holes	$ 0.01	cm	8	Material - Steel	3	$ 0.24
							Sub Total	**$ 1.54**

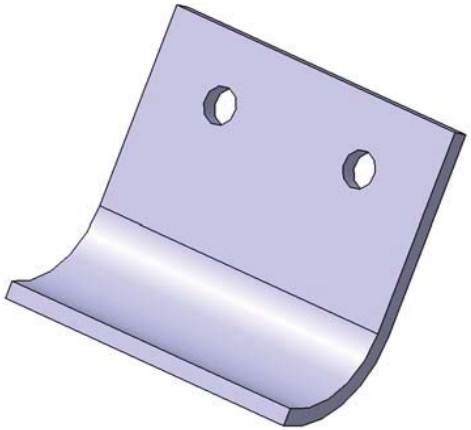

University	Ecole Centrale de Lyon			**Car #**	81	**Part Cost**	$ 5.42
System	Miscellaneous	**FileLink1**				**Qty**	1
Assembly	Headrest	**FileLink2**		**FileLink1**			
Part	Upper plate	**FileLink3**		**FileLink2**		**Extended Cost**	$ 5.42
P/N Base	03004			**FileLink3**			
Suffix	AA						
Details							

ItemOrder	Material	Use	UnitCost	Size1	Unit1	Size2	Unit2	Area Name	Area	Length	Density	Quantity	Sub Total
10	Steel, Mild	Material for part	$ 2.25	0.32	m	0.035	m	Rectangular area 3	1.12E-02	3.00E-03	7,800.00	3.36E-05	$ 0.59
												Sub Total	**$ 0.59**

ItemOrder	Process	Use	UnitCost	Unit	Quantity	Multiplier	Mult. Val.	Sub Total
10	Machining Setup, Install and remove	Setup for laser cutting	$ 1.30		1			$ 1.30
20	Laser Cut	Cuout shape and holes	$ 0.01	cm	101	Material - Steel	3	$ 3.03
30	Sheet metal bends	Bends	$ 0.25	bend	2			$ 0.50
							Sub Total	**$ 4.83**

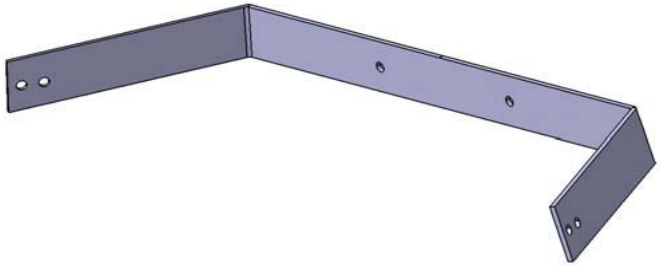

Vue de face
Echelle : 1:4

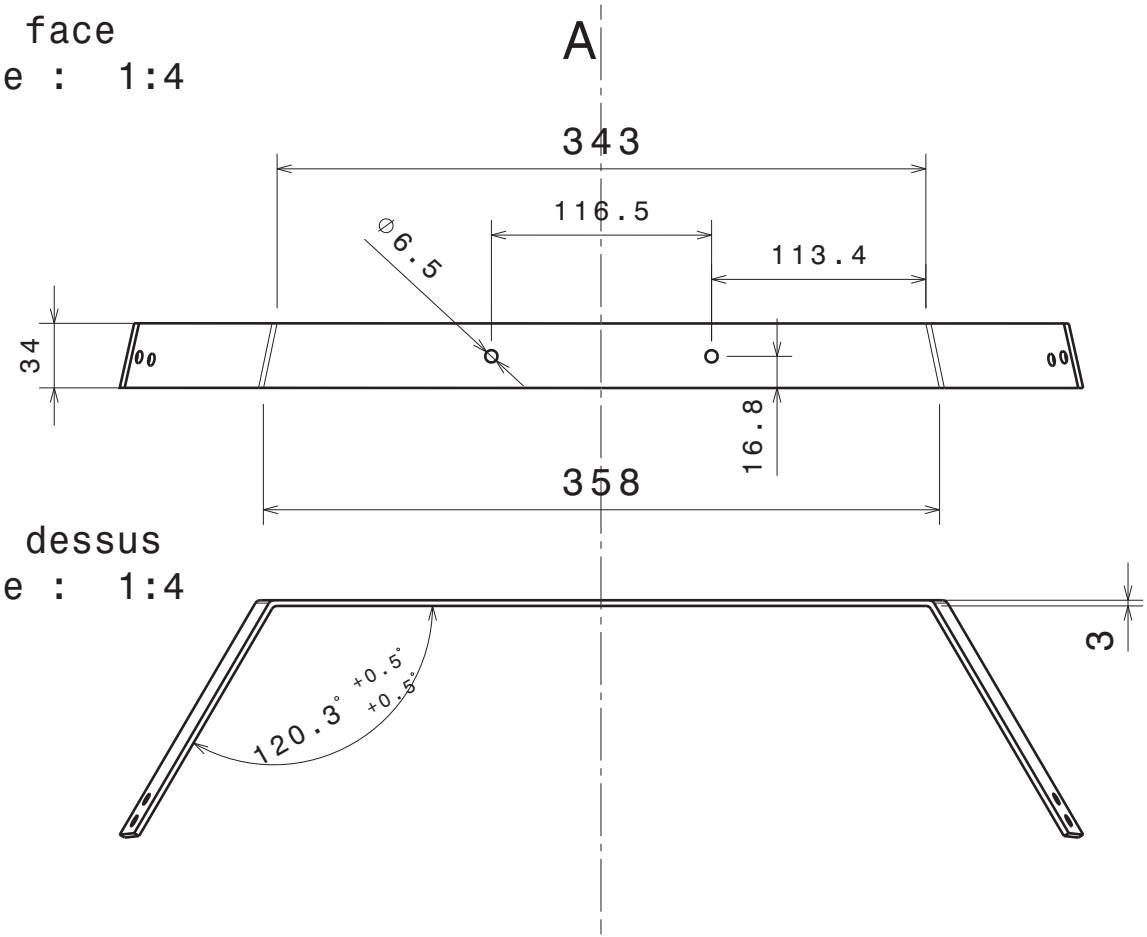

Vue de dessus
Echelle : 1:4

Vue auxiliaire
Echelle : 1:4

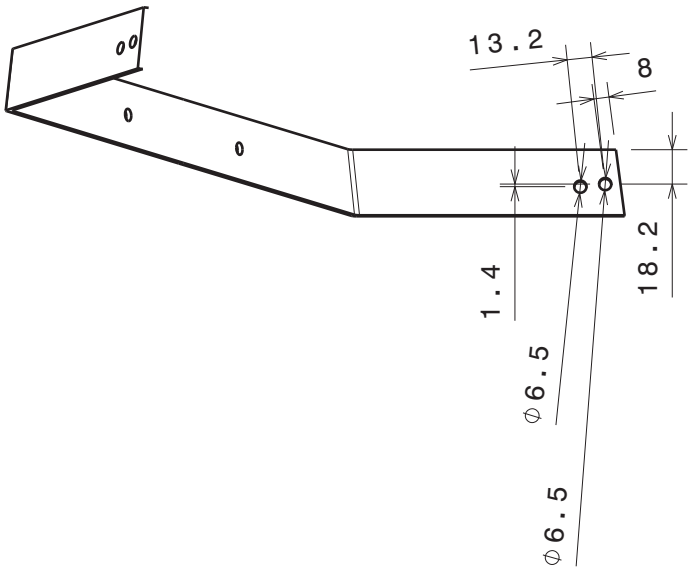

Acier laissé libre au fabricant

Tolérances générales ISO 2768 - mK

Casser les angles vifs

Plaque symétrique / au plan A

Taille A4		Ecurie Piston Sport Auto
Dessiné par Prunier Ludovic	Date 23/11/2013	Désignation Plaque maintien appui tete sup
Coordonnées 06.31.80.81.08 ludovic.prunier@ecl2015.ec-lyon.fr		Quantité 1 / Matériau Acier / Version v1.0
Vérifié par	Date	Echelle 1:4 / Numéro du plan 14 M068 / Feuille 1/1

University	Ecole Centrale de Lyon			**Car #**	81	**Part Cost**	$ 3.47
System	Miscellaneous	**FileLink1**				**Qty**	1
Assembly	Headrest	**FileLink2**		**FileLink1**			
Part	Bottom plate	**FileLink3**		**FileLink2**		**Extended Cost**	$ 3.47
P/N Base	03005			**FileLink3**			
Suffix	AA						
Details							

ItemOrder	Material	Use	UnitCost	Size1	Unit1	Size2	Unit2	Area Name	Area	Length	Density	Quantity	Sub Total
10	Steel, Mild		$ 2.25	0.14	m	0.06	m	Rectangular area 14mm x 60mm	8.40E-03	3.00E-03	7,800.00	2.52E-05	$ 0.44
												Sub Total	**$ 0.44**

ItemOrder	Process	Use	UnitCost	Unit	Quantity	Multiplier	Mult. Val.	Sub Total
10	Machining Setup, Install and remove	Setup for laser cutting	$ 1.30		1			$ 1.30
20	Laser Cut	Cuout shape and holes	$ 0.01	cm	41	Material - Steel	3	$ 1.23
30	Sheet metal bends	Bends	$ 0.25	bend	2			$ 0.50
							Sub Total	**$ 3.03**

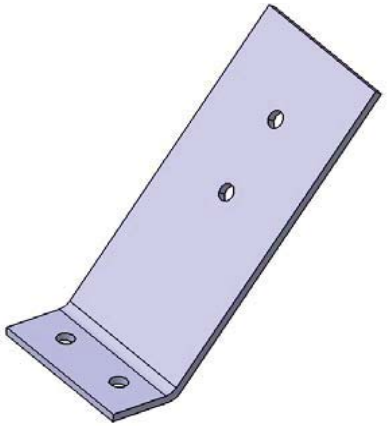

University	Ecole Centrale de Lyon	**Car #**	81	**Asm Cost**	$ 5.99
System	Miscellaneous			**Qty**	1
Assembly	Safety	**FileLink1**			
P/N Base	MS A0004	**FileLink2**		**Extended Cost**	$ 5.99
Suffix	AA	**FileLink3**			
Details					

ItemOrder	Part	Part Cost	Quantity	Sub Total
10	Roll Bar Padding	$ 2.87	2	$ 5.74
			Sub Total	**$ 5.74**

ItemOrder	Process	Use	UnitCost	Unit	Quantity	Multiplier	Mult. Val.	Sub Total
10	Assemble, 1 kg, Line-on-Line	Glue Roll Bar Padding on Roll Bar	$ 0.13	unit	2		1	$ 0.25
							Sub Total	**$ 0.25**

University	Ecole Centrale de Lyon			**Car #**	81	**Part Cost**	$ 2.87
System	Miscellaneous	**FileLink1**				**Qty**	2
Assembly	Safety	**FileLink2**		**FileLink1**			
Part	Roll Bar Padding	**FileLink3**		**FileLink2**		**Extended Cost**	$ 5.74
P/N Base	04001			**FileLink3**			
Suffix	AA						
Details							

ItemOrder	Material	Use	UnitCost	Size1	Unit1	Size2	Unit2	Area Name	Area	Length	Density	Quantity	Sub Total
10	Roll Hoop Padding		$ 0.05	30	cm							1	$ 0.05
20	Adhesive	Glue padding to Roll Hoop - cost included in process	$ -										$ -
												Sub Total	**$ 0.05**

ItemOrder	Process	Use	UnitCost	Unit	Quantity	Multiplier	Mult. Val.	Sub Total
10	Brush Apply	Apply glue to padding	$ 0.02	cm^2	141			$ 2.82
							Sub Total	**$ 2.82**

University	Ecole Centrale de Lyon	Car #	81	Asm Cost	$ 300.30
System	Miscellaneous			Qty	1
Assembly	Seat	FileLink1			
P/N Base	A0005	FileLink2		Extended Cost	$ 300.30
Suffix	AA	FileLink3			
Details	Seat assembly				

ItemOrder	Part	Part Cost	Quantity	Sub Total
10	Seat	$ 190.42	1	$ 190.42
20	Lower seat tab	$ 4.45	2	$ 8.90
30	Side seat tab	$ 1.85	2	$ 3.71
40	Rear seat mount	$ 33.68	1	$ 33.68
50	Lower seat mount	$ 3.10	2	$ 6.20
60	Side intermediate seat mount	$ 2.48	2	$ 4.97
70	Rear intermediate seat mount	$ 2.38	2	$ 4.75
			Sub Total	$ 252.63

ItemOrder	Material	Use	UnitCost	Size1	Unit1	Size2	Unit2	Area Name	Area	Length	Density	Quantity	Sub Total
10	Paint	Protect welded steel tabs from rust	$ 10.00	0.04	m^2							0.04	$ 0.40
20	Structural Foam	Place under seat to protect from chassis vibrations	$ 125.00	0.02	kg							1	$ 2.50
30	Tape	To fix and cover foam (cost included in process)	$ -										$ -
40	Head Rest Padding	Padding for upper backrest	$ 0.01	2100	cm^3							1	$ 10.50
50	Fabric	Upper backrest	$ 2.50	0.135	m^2							1	$ 0.34
60	Adhesive	Glue for backrest (cost included in process)	$ -										$ -
												Sub Total	$ 13.74

ItemOrder	Process	Use	UnitCost	Unit	Quantity	Multiplier	Mult. Val.	Sub Total
10	Weld	Weld 4 seat tabs to frame	$ 0.15	cm	32		1	$ 4.80
20	Aerosol Apply	Paint welded steel tabs to protect from rust	$ 5.25	m^2	0.04		1	$ 0.21
30	Non-metallic cutting <= 50.8 mm	Cut foam pieces to correct lengths	$ 0.70	cut	4	Material - Foam	0.33	$ 0.92
40	Assemble, 1kg, Line-on-Line	Place foam on tubes under seat	$ 0.13	unit	4		1	$ 0.50
50	Tape	To fix and cover foam under seat	$ 0.80	m	3		1	$ 2.40
60	Ratchet <= 6.35 mm	Bolt intermediate seat mounts to rear seat mount	$ 0.50	unit	8		1	$ 4.00
70	Reaction Tool <= 6.35 mm	Reaction tool for M6 nuts	$ 0.25	unit	8		1	$ 2.00
80	Ratchet <= 25.4 mm	Bolt rear seat mount to side seat tabs	$ 0.75	unit	4		1	$ 3.00
90	Reaction Tool <= 25.4 mm	Reaction tool for M8 nuts	$ 0.25	unit	4		1	$ 1.00
100	Ratchet <= 6.35 mm	Bolt lower seat mounts to lower seat tabs	$ 0.50	unit	4		1	$ 2.00
110	Reaction Tool <= 6.35 mm	Reaction tool for M6 nuts	$ 0.25	unit	4		1	$ 1.00
120	Assemble, 3 kg, Line-on-Line	Put seat into position	$ 0.38	unit	1		1	$ 0.38
130	Ratchet <= 25.4 mm	Bolt seat to seat mounts	$ 0.75	unit	6		1	$ 4.50
140	Liquid Apply - Spot	Glue fabric on backrest padding	$ 0.10	unit	10		1	$ 1.00
150	Assemble, 1 kg, Interference	Glue fabric on backrest padding	$ 0.19	unit	1		1	$ 0.19
160	Liquid Apply - Spot	Glue backrest padding on firewall	$ 0.10	unit	10		1	$ 1.00
170	Assemble, 1 kg, Interference	Glue backrest padding on firewall	$ 0.19	unit	1		1	$ 0.19
							Sub Total	$ 29.08

ItemOrder	Fastener	Use	UnitCost	Size1	Unit1	Size2	Unit2	Quantity	Sub Total
10	Bolt, Grade 8.8 (SAE 5)	Fix intermediate seat mounts to rear seat mount	$ 0.04	6	mm	16	mm	8	$ 0.32
20	Nut, Grade 8.8 (SAE 5)	Fix intermediate seat mounts to rear seat mount	$ 0.03	6	mm			8	$ 0.24
30	Washer, Grade 8.8 (SAE 5)	Fix intermediate seat mounts to rear seat mount	$ 0.01	6	mm			16	$ 0.16
40	Bolt, Grade 8.8 (SAE 5)	Fix rear seat mount to side seat tabs	$ 0.08	8	mm	20	mm	4	$ 0.32
50	Nut, Grade 8.8 (SAE 5)	Fix rear seat mount to side seat tabs	$ 0.04	8	mm			4	$ 0.16
60	Washer, Grade 8.8 (SAE 5)	Fix rear seat mount to side seat tabs	$ 0.01	8	mm			8	$ 0.08
70	Bolt, Grade 8.8 (SAE 5)	Fix lower seat mounts to lower tabs	$ 0.04	6	mm	16	mm	4	$ 0.16
80	Nut, Grade 8.8 (SAE 5)	Fix lower seat mounts to lower tabs	$ 0.03	6	mm			4	$ 0.12
90	Washer, Grade 8.8 (SAE 5)	Fix lower seat mounts to lower tabs	$ 0.01	6	mm			8	$ 0.08
100	Bolt, Grade 8.8 (SAE 5)	Fix seat to seat mounts (which have nutserts)	$ 0.08	8	mm	20	mm	6	$ 0.48
110	Washer, Grade 8.8 (SAE 5)	Self-Centering Washer for bolting in the seat	$ 0.01	8	mm			6	$ 0.06
								Sub Total	$ 2.18

ItemOrder	Tooling	Use	UnitCost	Unit	Quantity	PVF	FractionIncluded	Sub Total
10	Welds - Welding Fixture	Seat mount tabs	$ 500.00	point	16	3000	1	$ 2.67
							Sub Total	$ 2.67

University	Ecole Centrale de Lyon			**Car #**	81	**Part Cost**	$ 190.42
System	Miscellaneous	**FileLink1**				**Qty**	1
Assembly	Seat	**FileLink2**		**FileLink1**			
Part	Seat	**FileLink3**		**FileLink2**		**Extended Cost**	$ 190.42
P/N Base	05001			**FileLink3**			
Suffix	AA						
Details	Glass Fiber seat, cost as made						

ItemOrder	Material	Use	UnitCost	Size1	Unit1	Size2	Unit2	Area Name	Area	Length	Density	Quantity	Sub Total
10	Glass Fiber, 1 Ply (per kg)	Seat material	$ 100.00	0.2	kg							4	$ 80.00
20	Grommet, Elastomer	Grommet Seat Belt cutouts	$ 0.05									16	$ 0.80
30	Grommet, Elastomer	Grommet for seat rear edge	$ 0.05									1	$ 0.05
40	Rubber (per kg)	Rubber foam seat padding	$ 3.30	0.5	kg							1	$ 3.30
												Sub Total	**$ 84.15**

ItemOrder	Process	Use	UnitCost	Unit	Quantity	Multiplier	Mult. Val.	Sub Total
10	Lamination, Manual	Seat fabrication	$ 35.00	m^2	0.4	Repeat 4	4	$ 56.00
20	Resin application, Manual	Seat fabrication	$ 5.00	m^2	0.4	Repeat 4	4	$ 8.00
30	Cure, Oven	Seat fabrication	$ 20.00	m^2	0.4			$ 8.00
40	Non-metallic cutting > 76.2 mm	Cutout holes for harness	$ 1.40	cut	4			$ 5.60
50	Drilled holes < 25.4 mm dia.	Seat mount holes	$ 0.35	hole	6			$ 2.10
60	Assemble, 1 kg, Interference	Insert grommet strips in seat cutouts	$ 0.19	unit	16			$ 3.00
70	Assemble, 1 kg, Interference	Insert grommet strip on seat rear edge	$ 0.19	unit	1			$ 0.19
80	Cut (scissors, knife)	Cut out seat padding to right shapes	$ 0.06	cm	320			$ 19.20
90	Assemble, 1 kg, Loose	Stick velcro strips on seat	$ 0.06	unit	8			$ 0.50
100	Assemble, 1 kg, Loose	Stick velcro strips on padding	$ 0.06	unit	8			$ 0.50
110	Assemble, 1 kg, Loose	Attach padding to seat	$ 0.06	unit	4			$ 0.25
							Sub Total	**$ 103.34**

ItemOrder	Fastener	Use	UnitCost	Size1	Unit1	Size2	Unit2	Quantity	Sub Total
10	Hook and Loop, Loop Side	Adhesive velcro to put on seat	0.002	2	cm	20	cm	8	$ 0.64
20	Hook and Loop, Hook Side	Adhesive velcro to put on Seat Padding	0.003	2	cm	20	cm	8	$ 0.96
								Sub Total	**$ 1.60**

ItemOrder	Tooling	Use	UnitCost	Unit	Quantity	PVF	FracIncld	Sub Total
10	Lamination - Composite Tool	Seat	$ 10,000	m^2	0.4	3000	1	$ 1.33
							Sub Total	**$ 1.33**

University	Ecole Centrale de Lyon			**Car #**	81	**Part Cost**	$ 4.45
System	Miscellaneous	**FileLink1**				**Qty**	2
Assembly	Seat	**FileLink2**		**FileLink1**			
Part	Lower Seat Tab	**FileLink3**		**FileLink2**		**Extended Cost**	$ 8.90
P/N Base	05002			**FileLink3**			
Suffix	AA						
Details	Steel part welded to chassis						

ItemOrder	Material	Use	UnitCost	Size1	Unit1	Size2	Unit2	Area Name	Area	Length	Density	Quantity	Sub Total
10	Steel (per kg)	Material for tab	$ 2.25	120	mm	30	mm	Rectangular area 120mm x 30mm	3.60E-03	3.5E-03	8,010.00	1	$ 0.23
20	Steel (per kg)	Material for gusset	$ 2.25	60	mm	30	mm	Rectangular area 60mm x 30mm	1.80E-03	2.5E-03	8,010.00	1	$ 0.08
												Sub Total	**$ 0.31**

ItemOrder	Process	Use	UnitCost	Unit	Quantity	Multiplier	Mult. Val.	Sub Total
10	Machining Setup, Install and remove	Install and remove from laser machine	$ 1.30	unit	1			$ 1.30
20	Laser cut	cutout shape of tab	$ 0.01	cm	40.6	Material - Steel	3	$ 1.22
30	Laser cut	cutout shape of gusset	$ 0.01	cm	8.6	Material - Steel	3	$ 0.26
40	Sheet metal bend	bend	$ 0.25	bend	1			$ 0.25
50	Weld	Weld gusset	$ 0.15	cm	3			$ 0.45
							Sub Total	**$ 3.48**

ItemOrder	Tooling	Use	UnitCost	Unit	Quantity	PVF	FracIncld	Sub Total
10	Welds - Welding Fixture	Gusset	$ 500.00	point	4	3000	1	$ 0.67
							Sub Total	**$ 0.67**

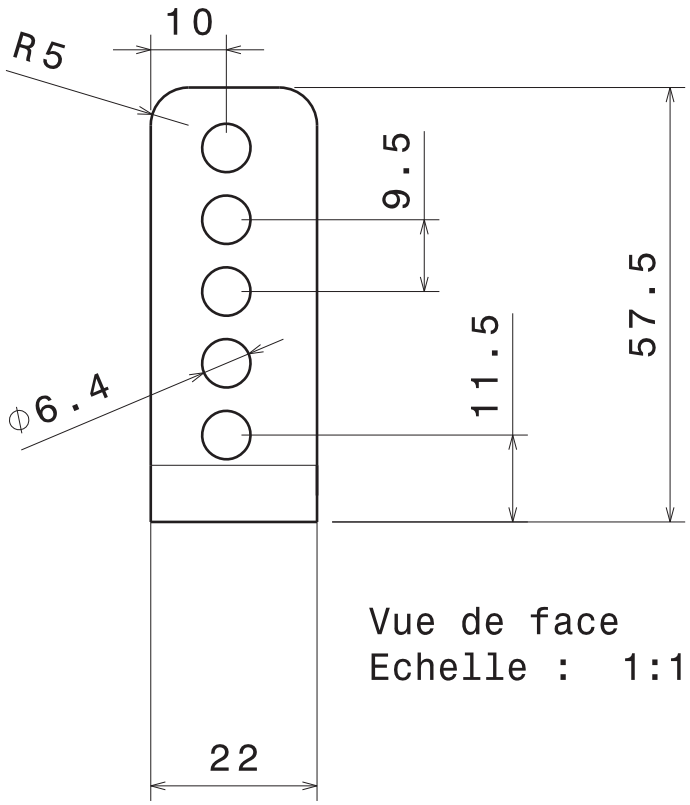

Vue de face
Echelle : 1:1

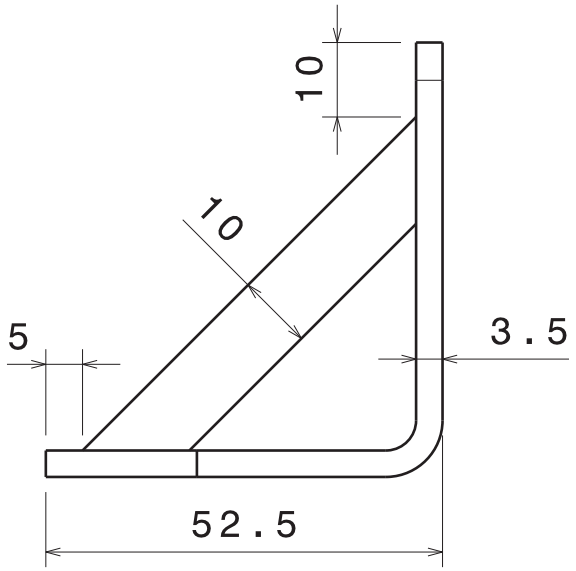

Vue de gauche
Echelle : 1:1

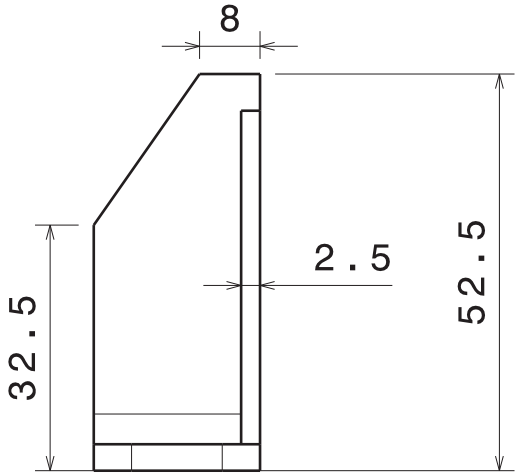

Vue de dessus
Echelle : 1:1

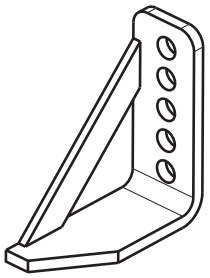

Vue isométrique
Echelle : 1:2

Casser les angles vifs

Rayon de pliage laissé libre au fabricant

Tolérances générales ISO 2768 - mK

Taille A4		Ecurie Piston Sport Auto
Dessiné par Antoine ROSSÉ	Date 03/12/2013	Désignation Chape Fixation Siege Avant Droite
Coordonnées 06 42 73 37 30 antoine.rosse@ecl2015.ec-lyon.fr	Quantité 1	Matériau Acier / Version v1.0
Date de livraison souhaitée 17/12/2013	Echelle 1:1	Numéro du plan 14 M057 / Feuille 1/1

University	Ecole Centrale de Lyon			**Car #**	81	**Part Cost**	$ 1.85
System	Miscellaneous	**FileLink1**				**Qty**	2
Assembly	Seat	**FileLink2**		**FileLink1**			
Part	Side Seat Tab	**FileLink3**		**FileLink2**		**Extended Cost**	$ 3.71
P/N Base	05003			**FileLink3**			
Suffix	AA						
Details	Steel part welded to chassis						

ItemOrder	Material	Use	UnitCost	Size1	Unit1	Size2	Unit2	Area Name	Area	Length	Density	Quantity	Sub Total
10	Steel (per kg)	Material for tab	$ 2.25	70	mm	40	mm	Rectangular area 70mm x 40mm	2.80E-03	4.0E-03	8,010.00	1	$ 0.20
												Sub Total	**$ 0.20**

ItemOrder	Process	Use	UnitCost	Unit	Quantity	Multiplier	Mult. Val.	Sub Total
10	Machining Setup, Install and remove	Install and remove from laser machine	$ 1.30	unit	1	2 parts made from a single machine setup	0.5	$ 0.65
20	Laser cut	cutout shape of tab	$ 0.01	cm	25.1	Material - Steel	3	$ 0.75
30	Sheet metal bend	bend	$ 0.25	bend	1			$ 0.25
							Sub Total	**$ 1.65**

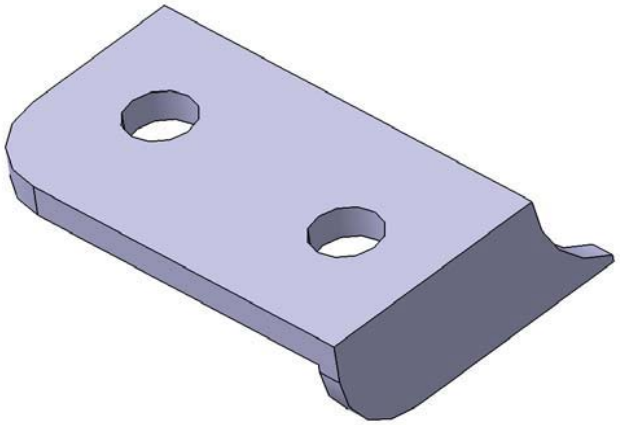

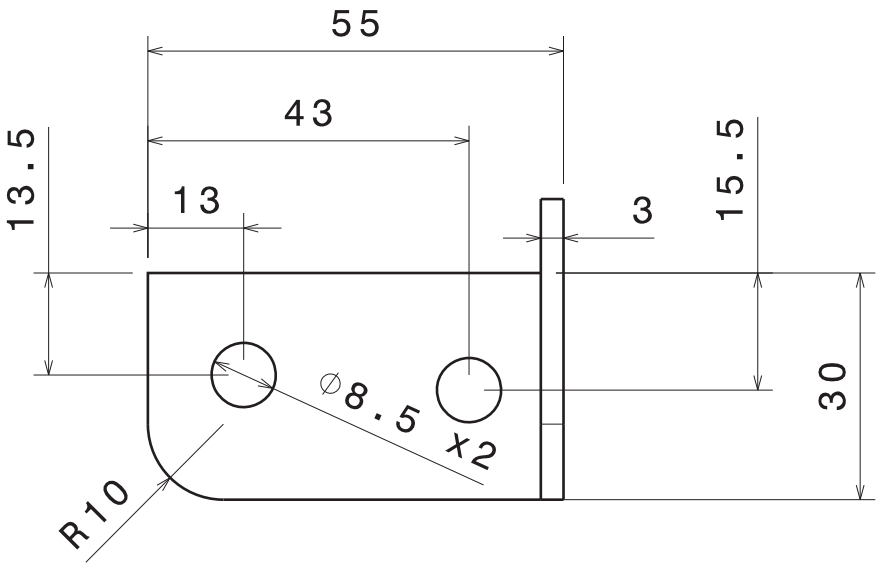

Vue de face
Echelle : 1:1

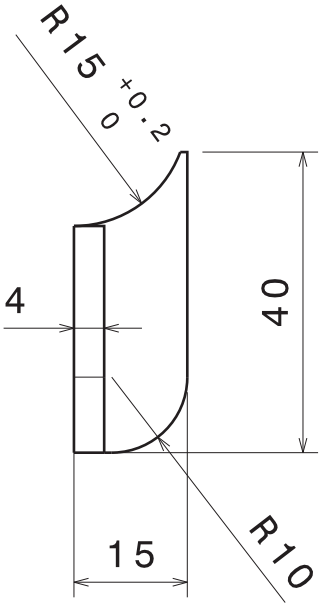

Vue de gauche
Echelle : 1:1

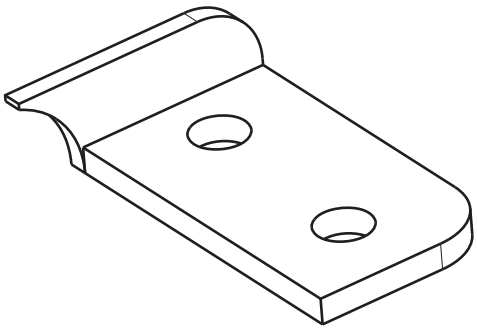

Vue isométrique
Echelle : 1:1

Tolérances générales ISO 2768 - mK

Taille A4		Ecurie Piston Sport Auto	
Dessiné par Antoine ROSSÉ	Date 03/12/2013	Désignation Chape fixation siege arriere droite	
Coordonnées 06 42 73 37 30 antoine.rosse@ecl2015.ec-lyon.fr		Quantité 01	Matériau Acier	Version v1.0
Date de livraison souhaitée 17/12/2013		Echelle 1:1	Numéro du plan 14 M059	Feuille 1/1

University	Ecole Centrale de Lyon			**Car #**	81	**Part Cost**	$ 33.68
System	Miscellaneous	**FileLink1**				**Qty**	1
Assembly	Seat	**FileLink2**		**FileLink1**			
Part	Rear seat mount	**FileLink3**		**FileLink2**		**Extended Cost**	$ 33.68
P/N Base	05004			**FileLink3**			
Suffix	AA						
Details	Steel part which supports the seat						

ItemOrder	Material	Use	UnitCost	Size1	Unit1	Size2	Unit2	Area Name	Area	Length	Density	Quantity	Sub Total
10	Steel (per kg)	Material for part and gussets	$ 2.25	650	mm	170	mm	Rectangular area 650mm x 170mm	1.11E-01	3.0E-03	8,010.00	1	$ 5.97
20	Paint	Protect from rust	$ 10.00	0.05	m^2							1	$ 0.50
												Sub Total	**$ 6.47**

ItemOrder	Process	Use	UnitCost	Unit	Quantity	Multiplier	Mult. Val.	Sub Total
10	Machining Setup, Install and remove	Install and remove from laser machine	$ 1.30	unit	1			$ 1.30
20	Laser cut	cutout shape of main part	$ 0.01	cm	299.6	Material - Steel	3	$ 8.99
30	Laser cut	cutout shape of gussets	$ 0.01	cm	182			$ 1.82
40	Weld	Weld gussets	$ 0.15	cm	90			$ 13.50
50	Aerosol Apply	Paint to protect from rust	$ 5.25	m^2	0.05			$ 0.26
							Sub Total	**$ 25.87**

ItemOrder	Tooling	Use	UnitCost	Unit	Quantity	PVF	FracIncld	Sub Total
10	Welds - Welding Fixture	Gusset	$ 500.00	point	8	3000	1	$ 1.33
							Sub Total	**$ 1.33**

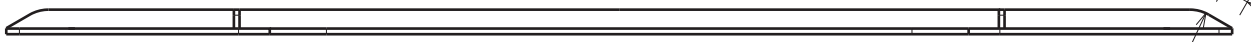

Vue de face
Echelle : 1:4

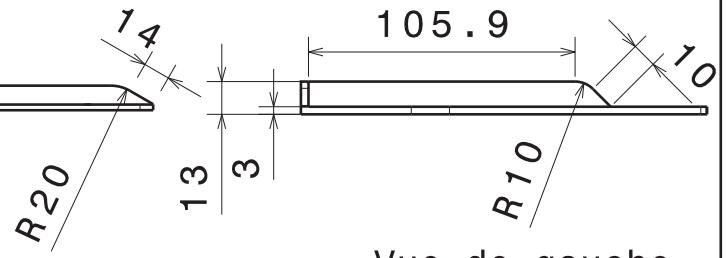

Vue de gauche
Echelle : 1:3

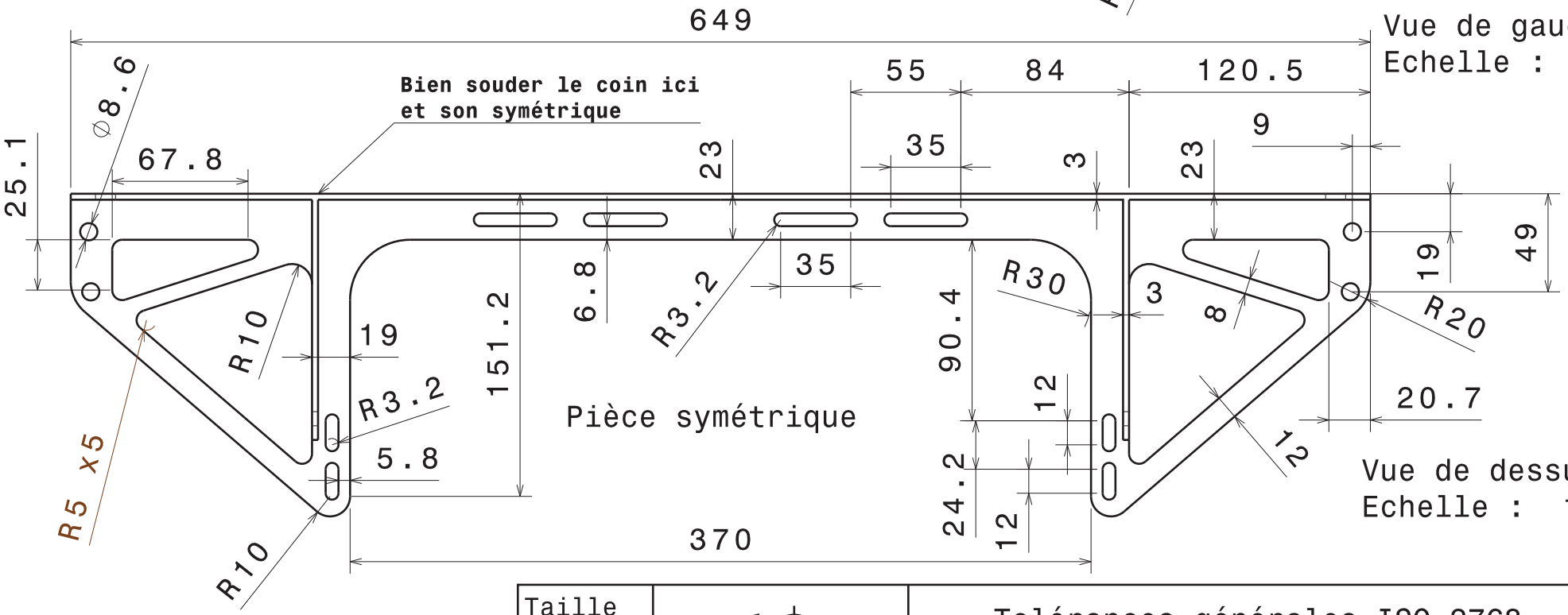

Vue de dessus
Echelle : 1:3

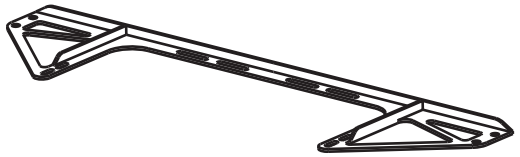

Vue isométrique
Echelle : 1:8

Taille A4		Tolérances générales ISO 2768 - mK Ecurie Piston Sport Auto
Dessiné par Antoine ROSSÉ	Date 03/03/2013	Désignation Support siège arrière V2
Coordonnées 06 42 73 37 30 antoine.rosse@ecl2015.ec-lyon.fr		Quantité 1 / Matériau Acier / Version v2.0
Date de livraison souhaitée		Echelle 1:3 / Numéro du plan 14 M134 / Feuille 1/1

University	Ecole Centrale de Lyon			**Car #**	81	**Part Cost**	$ 3.10
System	Miscellaneous	**FileLink1**				**Qty**	2
Assembly	Seat	**FileLink2**		**FileLink1**			
Part	Lower Seat Mount	**FileLink3**		**FileLink2**		**Extended Cost**	$ 6.20
P/N Base	05005			**FileLink3**			
Suffix	AA						
Details	Steel Lower seat mount						

ItemOrder	Material	Use	UnitCost	Size1	Unit1	Size2	Unit2	Area Name	Area	Length	Density	Quantity	Sub Total
10	Steel (per kg)	Material for part	$ 2.25	120	mm	30	mm	Rectangular area 120mm x 30mm	3.60E-03	3.5E-03	8,010.00	1	$ 0.23
20	Paint	Protect from rust	$ 10.00	0.01	m^2							0.01	$ 0.10
												Sub Total	**$ 0.33**

ItemOrder	Process	Use	UnitCost	Unit	Quantity	Multiplier	Mult. Val.	Sub Total
10	Machining Setup, Install and remove	Install and remove from laser machine	$ 1.30	unit	1	2 parts made from a single machine setup	0.5	$ 0.65
20	Laser cut	cutout shape outline and holes	$ 0.01	cm	40	Material - Steel	3	$ 1.20
30	Sheet metal bend	bend	$ 0.25	bend	1			$ 0.25
40	Aerosol Apply	Paint to protect from rust	$ 5.25	m^2	0.01			$ 0.05
50	Riveting	For nutsert (similar process to riveting)	$ 0.25	unit	1			$ 0.25
							Sub Total	**$ 2.40**

ItemOrder	Fastener	Use	UnitCost	Size1	Unit1	Size2	Unit2	Quantity	Sub Total
10	Nutsert (J-Nut)	To bolt seat to this part	0.369	8	mm			1	$ 0.37
								Sub Total	**$ 0.37**

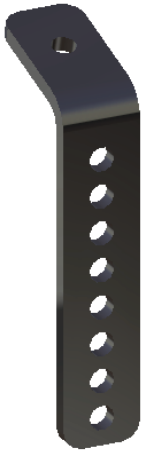

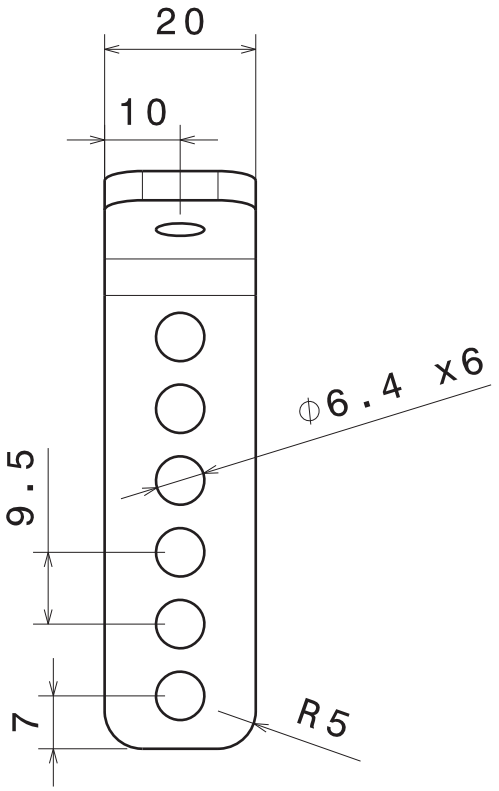

Vue de face
Echelle : 1:1

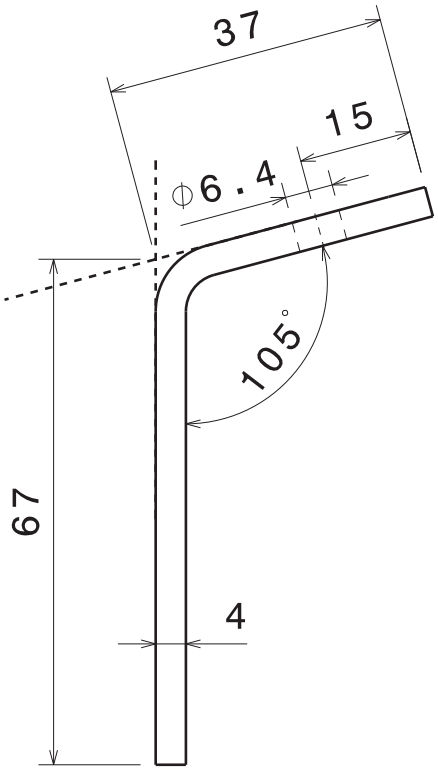

Vue de gauche
Echelle : 1:1

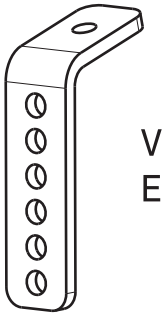

Vue isométrique
Echelle : 1:2

Rayon de pliage libre au fabricant

Tolérances générales ISO 2768 - mK

Taille A4		Ecurie Piston Sport Auto	
Dessiné par Antoine ROSSÉ	Date 03/12/2013	Désignation Support siège avant	
Coordonnées 06 42 73 37 30 antoine.rosse@ecl2015.ec-lyon.fr		Quantité 2	Matériau Acier	Version v1.0
Date de livraison souhaitée 07/01/2014		Echelle 1:1	Numéro du plan 14 M060	Feuille 1/1

University	Ecole Centrale de Lyon			**Car #**	81	**Part Cost**	$ 2.48
System	Miscellaneous	**FileLink1**				**Qty**	2
Assembly	Seat	**FileLink2**		**FileLink1**			
Part	Side intermediate seat mount	**FileLink3**		**FileLink2**		**Extended Cost**	$ 4.97
P/N Base	05006			**FileLink3**			
Suffix	AA						
Details	Part onto which side of seat is bolted						

ItemOrder	Material	Use	UnitCost	Size1	Unit1	Size2	Unit2	Area Name	Area	Length	Density	Quantity	Sub Total
10	Steel (per kg)	Material for part	$ 2.25	60	mm	40	mm	Rectangular area 60mm x 40mm	2.40E-03	2.5E-03	8,010.00	1	$ 0.11
20	Paint	Protect from rust	$ 10.00	0.01	m^2							0.01	$ 0.10
												Sub Total	**$ 0.21**

ItemOrder	Process	Use	UnitCost	Unit	Quantity	Multiplier	Mult. Val.	Sub Total
10	Machining Setup, Install and remove	Install and remove from laser machine	$ 1.30	unit	1	2 parts made from a single machine setup	0.5	$ 0.65
20	Laser cut	cutout shape of tab	$ 0.01	cm	23.5	Material - Steel	3	$ 0.71
30	Sheet metal bend	bend	$ 0.25	bend	1			$ 0.25
40	Aerosol Apply	Paint to protect from rust	$ 5.25	m^2	0.01			$ 0.05
50	Riveting	For nutsert (similar process to riveting)	$ 0.25	unit	1			$ 0.25
							Sub Total	**$ 1.91**

ItemOrder	Fastener	Use	UnitCost	Size1	Unit1	Size2	Unit2	Quantity	Sub Total
10	Nutsert (J-Nut)	To bolt seat to this part	0.369	8	mm			1	$ 0.37
								Sub Total	**$ 0.37**

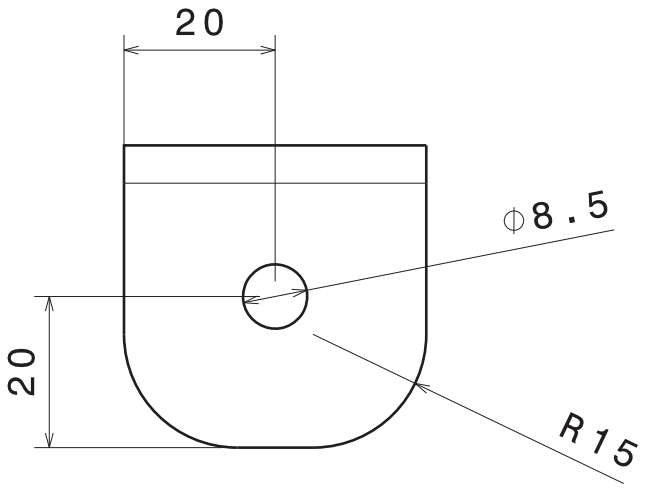

Vue de face
Echelle : 1:1

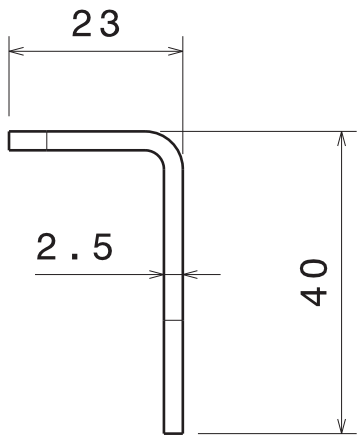

Vue de gauche
Echelle : 1:1

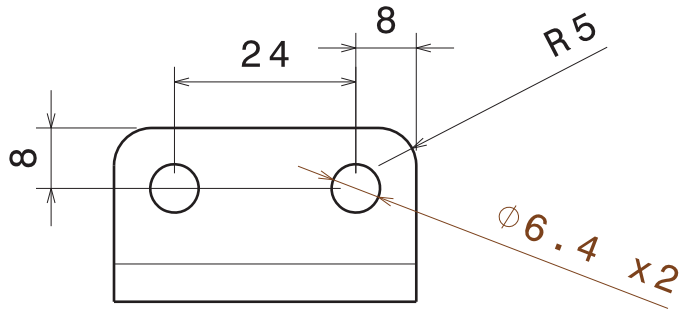

Vue de dessus
Echelle : 1:1

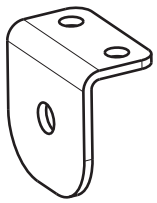

Vue isométrique
Echelle : 1:2

Rayon de pliage libre au fabricant

Tolérances générales ISO 2768 - mK

Taille A4		Ecurie Piston Sport Auto	
Dessiné par Antoine ROSSÉ	Date 06/01/2014	Désignation Support siège intermediaire cote	
Coordonnées 06 42 73 37 30 antoine.rosse@ecl2015.ec-lyon.fr		Quantité 2	Matériau Acier	Version v1.0
Date de livraison souhaitée 31/01/2014		Echelle 1:1	Numéro du plan 14 M084	Feuille 1/1

University	Ecole Centrale de Lyon			**Car #**	81	**Part Cost**	$ 2.38
System	Miscellaneous	**FileLink1**				**Qty**	1
Assembly	Seat	**FileLink2**		**FileLink1**			
Part	Rear intermediate seat mount	**FileLink3**		**FileLink2**		**Extended Cost**	$ 2.38
P/N Base	05007			**FileLink3**			
Suffix	AA						
Details	Part onto which back of seat is bolted						

ItemOrder	Material	Use	UnitCost	Size1	Unit1	Size2	Unit2	Area Name	Area	Length	Density	Quantity	Sub Total
10	Steel (per kg)	Material for part	$ 2.25	60	mm	40	mm	Rectangular area 60mm x 40mm	2.40E-03	2.5E-03	8,010.00	1	$ 0.11
20	Paint	Protect from rust	$ 10.00	0.01	m^2							1	$ 0.10
												Sub Total	**$ 0.21**

ItemOrder	Process	Use	UnitCost	Unit	Quantity	Multiplier	Mult. Val.	Sub Total
10	Machining Setup, Install and remove	Install and remove from laser machine	$ 1.30	unit	1	2 parts made from a single machine setup	0.5	$ 0.65
20	Laser cut	cutout shape of tab	$ 0.01	cm	23.5	Material - Steel	3	$ 0.71
30	Sheet metal bend	bend	$ 0.25	bend	1			$ 0.25
40	Aerosol Apply	Paint to protect from rust	$ 5.25	m^2	0.01			$ 0.05
50	Riveting	For nutsert (similar process to riveting)	$ 0.25	unit	1			$ 0.25
							Sub Total	**$ 1.91**

ItemOrder	Fastener	Use	UnitCost	Size1	Unit1	Size2	Unit2	Quantity	Sub Total
10	Nutsert (J-Nut)	To bolt seat to this part	0.369	8	mm			1	$ 0.37
								Sub Total	**$ 0.37**

Vue de face
Echelle : 1:1

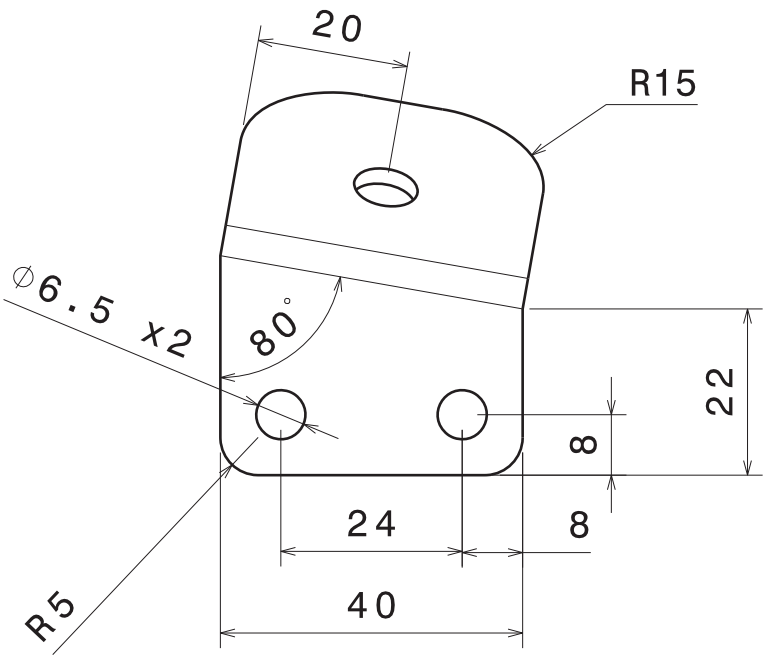

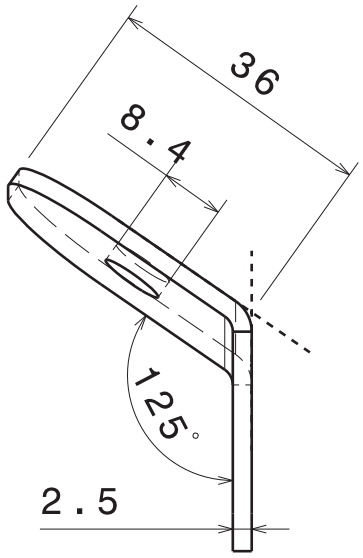

Vue de gauche
Echelle : 1:1

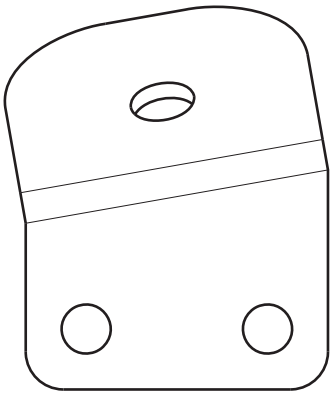

Vue de face de
la pièce symétrique
Scale: 1:1

2 pièces symétriques

Rayon de pliage libre au fabricant

Tolérances générales ISO 2768 - mK

Taille A4		Ecurie Piston Sport Auto	
Dessiné par Antoine ROSSÉ	Date 01/02/2014	Désignation Support siège intermediaire arriere	
Coordonnées 06 42 73 37 30 antoine.rosse@ecl2015.ec-lyon.fr		Quantité 1+1	Matériau Acier	Version v2.0
Date de livraison souhaitée 13/02/2014		Echelle 1:1	Numéro du plan 14 M085	Feuille 1/1

STEERING SYSTEM

EPSA TEAM

CAR # 81

University	Ecole Centrale de Lyon	**Car #**	81	**Asm Cost**	$ 126.81
System	Steering System			**Qty**	1
Assembly	Steering column	**FileLink1**			
P/N Base	A0001	**FileLink2**		**Extended Cost**	$ 126.81
Suffix	AA	**FileLink3**			
Details					

ItemOrder	Part	Part Cost	Quantity	Sub Total
10	Column Tab	$ 1.89	1	$ 1.89
20	Column Mount	$ 5.41	1	$ 5.41
30	Column Mount Washer	$ 1.47	1	$ 1.47
40	Gearshift connector mount	$ 2.09	1	$ 2.09
50	Steering Wheel Mount	$ 10.18	1	$ 10.18
60	Steering Wheel	$ 14.33	1	$ 14.33
70	First Column Tube	$ 5.50	1	$ 5.50
80	Second Column Tube	$ 1.10	1	$ 1.10
90	Third Column Tube	$ 1.74	1	$ 1.74
			Sub Total	**$ 43.71**

ItemOrder	Material	Use	UnitCost	Size1	Unit1	Size2	Unit2	Area Name	Area	Length	Density	Quantity	Sub Total
10	Steering Column Universal Joint	Universal Joints with plastic protections	$ 20.00	20	mm							2	$ 40.00
20	Paint	Steering wheel mount and column tab paint	$ 10.00	0.022	m^2							0.022	$ 0.22
30	Bearing, Spherical	Bearing for rotation of the second tube	$ 17.00	20	mm							1	$ 17.00
40	Bearing, Ball, Radial	Bearings for rotation of the first tube	$ 6.63	20	mm	11	mm					2	$ 13.26
50	Tape	To fix and cover foam (cost included in process)											
60	Foam, Expanding, Non-Structural	Foam to protect the pilote from the steering column	$ 15.00	0.05	kg							0.05	$ 0.75
												Sub Total	**$ 71.23**

ItemOrder	Process	Use	UnitCost	Unit	Quantity	Multiplier	Mult. Val.	Sub Total
10	Weld	steering wheel mount welding	$ 0.15	cm	13			$ 1.95
20	Aerosol apply	Steering wheel mount painting	$ 5.25	m^2	0.02			$ 0.11
30	Weld	Column Tab Welding	$ 0.15	cm	5.5			$ 0.83
40	Aerosol apply	Steering wheel mount painting	$ 5.25	m^2	0.002			$ 0.01
50	Assemble, 1 kg, Interference	Assemble of bearing ball in steering wheel mount and on first tube	$ 0.19	unit	2			$ 0.38
60	Assemble, 1 kg, Interference	Put retaining ring	$ 0.19	unit	1			$ 0.19
70	Assemble, 1 kg, Line-on-Line	Assemble column mount and column washer on column tab	$ 0.13	unit	1			$ 0.13

80	Assemble, 1 kg, Interference	Assemble the spherical bearing in the column mount	$ 0.19	unit	1			$ 0.19
90	Assemble, 1 kg, Line-on-Line	Assemble second tube in the spherical bearing	$ 0.13	unit	1			$ 0.13
100	Assemble, 1 kg, Line-on-Line	Assemble gearshift connector mount	$ 0.13	unit	1			$ 0.13
110	Ratchet <= 6.35 mm	Put the bolts on the column mount	$ 0.50	unit	2			$ 1.00
120	Reaction Tool <= 6.35 mm	Tighten the nut	$ 0.25	unit	2			$ 0.50
130	Drilled holes < 25.4 mm dia.	Holes on universal joints for pins	$ 0.35	hole	4			$ 1.40
140	Assemble, 1 kg, Line-on-Line	Assemble third tube and universal joints	$ 0.13	unit	3			$ 0.38
150	Assemble, 1 kg, Interference	Put pins into universal joints and tubes	$ 0.19	unit	4			$ 0.75
160	Ratchet <= 6.35 mm	Assemble the steering wheel, the quick release	$ 0.50	unit	3			$ 1.50
170	Reaction Tool <= 6.35 mm	Tighten the nut	$ 0.25	unit	3			$ 0.75
180	Assemble, 1 kg, Loose	Assemble the foam on the third tube	$ 0.06	unit	1			$ 0.06
							Sub Total	**$ 10.35**

ItemOrder	Fastener	Use	UnitCost	Size1	Unit1	Size2	Unit2	Quantity	Sub Total
10	Pin, Cotter, Straight		$ 0.05	5	mm			6	$ 0.30
20	Retaining Ring, External		$ 0.09	20	mm			1	$ 0.09
30	Bolt, Grade 8.8 (SAE 5)	Bolt linking to rack and wheels	$ 0.07	6	mm	30	mm	2	$ 0.14
40	Nut, Grade 8.8 (SAE 5)	Nuts for bolts	$ 0.03	6	mm			2	$ 0.06
50	Washer, Grade 8.8 (SAE 5)	Washers for bolts	$ 0.01	6	mm			2	$ 0.02
60	Bolt, Grade 8.8 (SAE 5)	Bolts for steering wheel	$ 0.06	5	mm	40	mm	3	$ 0.18
70	Nut, Grade 8.8 (SAE 5)	Nuts for bolts	$ 0.02	5	mm			3	$ 0.06
								Sub Total	**$ 0.85**

ItemOrder	Tooling	Use	UnitCost	Unit	Quantity	PVF	FractionIncluded	Sub Total
10	Welds-Welding Fixture	Column Tab Welding	$ 500.00	point	2	3000	1	$ 0.33
20	Welds-Welding Fixture	Steering Wheel Mount Welding	$ 500.00	point	2	3000	1	$ 0.33
							Sub Total	**$ 0.67**

University	Ecole Centrale de Lyon			**Car #**	81	**Part Cost**	$ 1.89
System	Steering System	**FileLink1**				**Qty**	1
Assembly	Steering Column	**FileLink2**		**FileLink1**			
Part	Column tab	**FileLink3**		**FileLink2**		**Extended Cost**	$ 1.89
P/N Base	01001			**FileLink3**			
Suffix	AA						
Details							

ItemOrder	Material	Use	UnitCost	Size1	Unit1	Size2	Unit2	Area Name	Area	Length	Density	Quantity	Sub Total
10	Steel, Mild (per kg)	Stock for column tab	$ 2.25	20	mm	60	mm	Rectangular area 20mm x 60mm	1.20E-03	0.004	7 860.00	1	$ 0.08
												Sub Total	**$ 0.08**

ItemOrder	Process	Use	UnitCost	Unit	Quantity	Multiplier	Mult. Val.	Sub Total
10	Machining Setup, Install and remove	Setup for laser cut	$ 1.30	unit	1			$ 1.30
20	Laser Cut	Outline and holes	$ 0.01	cm	17	Material - Steel	3	$ 0.51
							Sub Total	**$ 1.81**

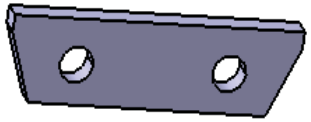

University	Ecole Centrale de Lyon			**Car #**	81	**Part Cost**	$ 5.41
System	Steering System	**FileLink1**				**Qty**	1
Assembly	Steering Column	**FileLink2**		**FileLink1**			
Part	Column Mount	**FileLink3**		**FileLink2**		**Extended Cost**	$ 5.41
P/N Base	01002			**FileLink3**			
Suffix	AA						
Details							

ItemOrder	Material	Use	UnitCost	Size1	Unit1	Size2	Unit2	Area Name	Area	Length	Density	Quantity	Sub Total
10	Aluminium, normal (per kg)	Material for column mount	$ 4.20	18	mm	45	mm	Rectangular area 18mm x 45mm	8.10E-04	0.105	2 710.00	1	$ 0.97
												Sub Total	**$ 0.97**

ItemOrder	Process	Use	UnitCost	Unit	Quantity	Multiplier	Mult. Val.	Sub Total
10	Machining Setup, Install and remove	Setup for machining and removal	$ 1.30	unit	1			$ 1.30
20	Machining	Material removal - side view profile	$ 0.04	cm^3	31	Material - Aluminum	1	$ 1.24
30	Drilled holes < 25.4 mm dia.	Holes for assembly	$ 0.35	hole	2			$ 0.70
40	Machining Setup, Change	Setup for machining	$ 0.65	unit	1			$ 0.65
50	Machining	Material removal - side view profile	$ 0.04	cm^3	5	Material - Aluminum	1	$ 0.20
60	Ream hole	Reamed hole for spherical bearing	$ 0.35	hole	1			$ 0.35
							Sub Total	**$ 4.44**

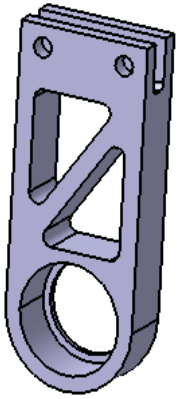

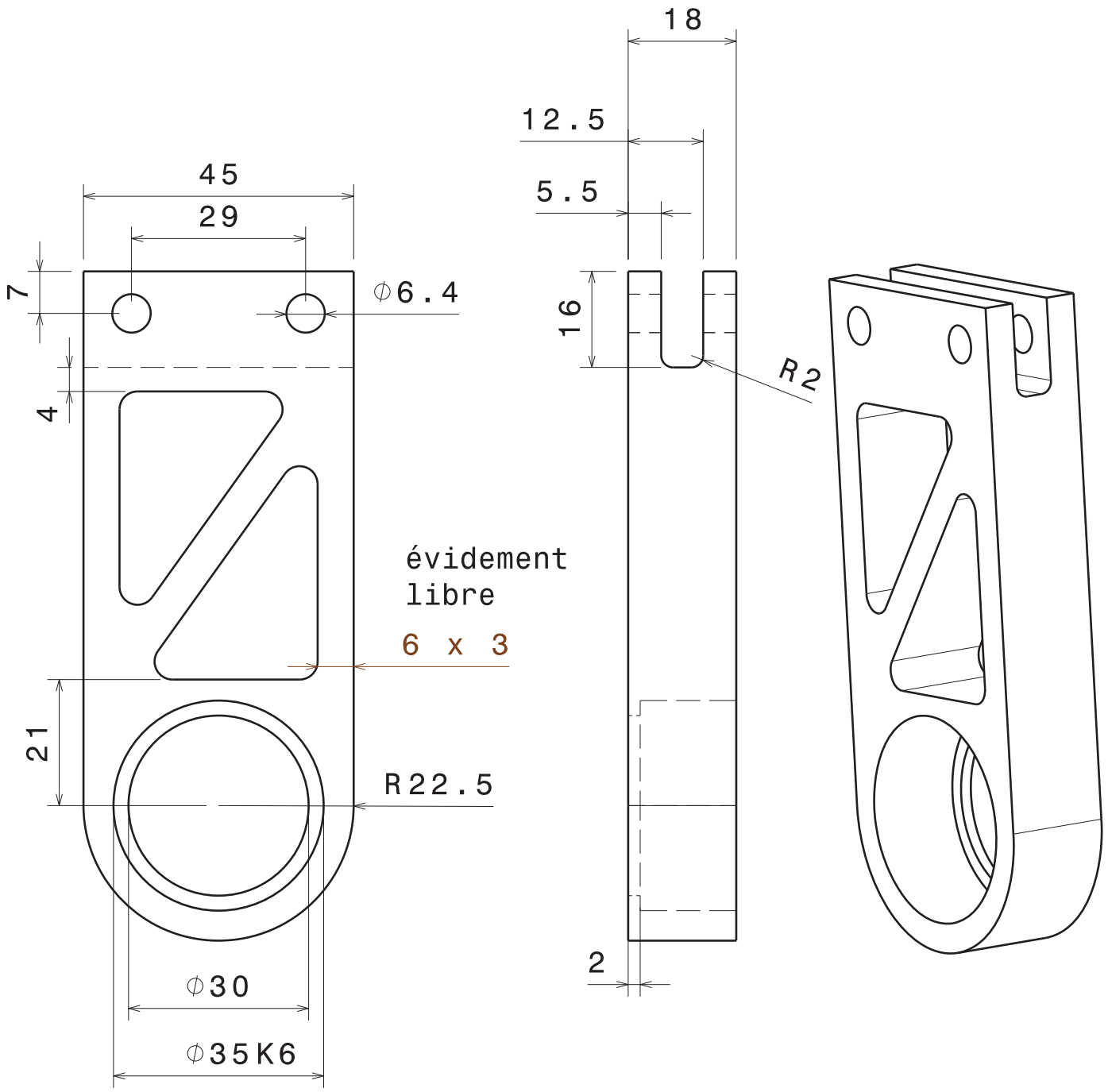

Casser les angles vifs. Tolérances générales ISO 2768 - mK

Taille A4		Ecurie Piston Sport Auto	
Dessiné par Mathieu Corbat	Date 18/11/2013	Désignation Chape de colonne	
Coordonnées 06 32 67 13 97 mathieu.corbat@ecl2015.ec-lyon.fr		Quantité 1	Matériau Aluminium 2017	Version 1.0
Vérifié par	Date	Echelle 1:1	Numéro du plan 14 B007	Feuille 1/1

University	Ecole Centrale de Lyon			**Car #**	81	**Part Cost**	$ 1.47
System	Steering System	**FileLink1**				**Qty**	1
Assembly	Steering Column	**FileLink2**		**FileLink1**			
Part	Column mount washer	**FileLink3**		**FileLink2**		**Extended Cost**	$ 1.47
P/N Base	01003			**FileLink3**			
Suffix	AA						
Details							

ItemOrder	Material	Use	UnitCost	Size1	Unit1	Size2	Unit2	Area Name	Area	Length	Density	Quantity	Sub Total
10	Aluminum, Normal (per kg)	Stock for column washer	$ 4.20	20	mm	50	mm	Rectangular area 20mm x 50mm	1.00E-03	0.002	2,710.00	1	$ 0.02
												Sub Total	**$ 0.02**

ItemOrder	Process	Use	UnitCost	Unit	Quantity	Multiplier	Mult. Val.	Sub Total
10	Machining Setup, Install and remove	Setup for laser cut	$ 1.30	unit	1			$ 1.30
20	Laser Cut	Outline and holes	$ 0.01	cm	15.4	Material - Aluminium	1	$ 0.15
							Sub Total	**$ 1.45**

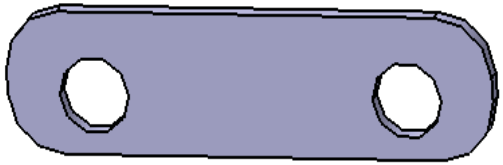

University	Ecole Centrale de Lyon			**Car #**	81	**Part Cost**	$ 2.09
System	Steering System	**FileLink1**				**Qty**	1
Assembly	Steering Column	**FileLink2**		**FileLink1**			
Part	Gearshift connector mount	**FileLink3**		**FileLink2**		**Extended Cost**	$ 2.09
P/N Base	01004			**FileLink3**			
Suffix	AA						
Details	Part which holds gearshift connector						

ItemOrder	Material	Use	UnitCost	Size1	Unit1	Size2	Unit2	Area Name	Area	Length	Density	Quantity	Sub Total
10	Aluminum, Normal (per kg)	Stock for part	$ 4.20	90	mm	90	mm	Rectangular area 90mm x 90mm	8.10E-03	0.002	2 710.00	1	$ 0.14
												Sub Total	**$ 0.14**

ItemOrder	Process	Use	UnitCost	Unit	Quantity	Multiplier	Mult. Val.	Sub Total
10	Machining Setup, Install and remove	Setup for laser cut	$ 1.30	unit	1			$ 1.30
20	Laser Cut	Outline and holes	$ 0.01	cm	15.4	Material - Aluminium	1	$ 0.15
30	Sheet metal bends	for edge bends	$ 0.25	bend	2			$ 0.50
							Sub Total	**$ 1.95**

University	Ecole Centrale de Lyon			**Car #**	81	**Part Cost**	$ 10.18
System	Steering System	**FileLink1**				**Qty**	1
Assembly	Steering Column	**FileLink2**		**FileLink1**			
Part	Steering Wheel Mount	**FileLink3**		**FileLink2**		**Extended Cost**	$ 10.18
P/N Base	01005			**FileLink3**			
Suffix	AA						
Details							

ItemOrder	Material	Use	UnitCost	Size1	Unit1	Size2	Unit2	Area Name	Area	Length	Density	Quantity	Sub Total
10	Steel, Mild (per kg)	Stock for column washer	$ 2.25	23.5	mm			Round area Radius 23,5	1.73E-03	0.036	7 860.00	1	$ 1.10
20	Tubing, Steel	Liaison with the frame	$ 2.25	10	mm	8.5	mm		8.70E-05	0.165	7 860.00	2	$ 0.51
												Sub Total	**$ 1.61**

ItemOrder	Process	Use	UnitCost	Unit	Quantity	Multiplier	Mult. Val.	Sub Total
10	Machining Setup, Install and remove	Setup for machining and removal	$ 1.30	unit	1			$ 1.30
20	Drilled holes < 25.4 mm dia.	Radius 9.5mm for column axis	$ 0.35	hole	1			$ 0.35
30	Machining	first hole for ball bearing	$ 0.04	cm^3	3	Material Steel	3	$ 0.36
40	Ream hole	Reamed hole for ball bearing	$ 0.35	hole	1			$ 0.35
50	Machining Setup, Change	Setup for last machining process	$ 0.65	unit	1			$ 0.65
60	Machining	Second hole for ball bearing	$ 0.04	cm^3	3	Material Steel	3	$ 0.36
70	Ream hole	Reamed hole for ball bearing	$ 0.35	hole	1			$ 0.35
80	Machining Setup, Install and remove	Setup for machining and removal	$ 1.30	unit	1			$ 1.30
90	Laser Cut	Preparation of the 2 tubes	$ 0.01	cm	26			$ 0.26
100	Weld	Welding of tubes on the machined part	$ 0.15	cm	13		1	$ 1.95
							Sub Total	**$ 7.23**

ItemOrder	Tooling	Use	UnitCost	Unit	Quantity	PVF	FracIncld	Sub Total
10	Welds-Welding Fixture	Steel mounts welding on frame	$ 500.00	point	8	3000	1	$ 1.33
							Sub Total	**$ 1.33**

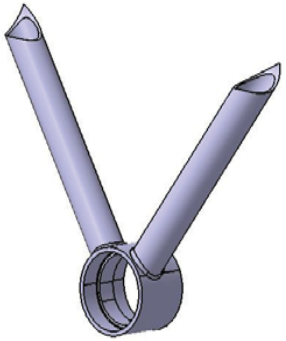

Prévu pour montage de roulements glissants. Le fourreau usiné une première fois (Boisard) puis soudé aux tubes en V (Giraudière). Un deuxième usinage pour les finitions, et le tout est soudé au chassis.

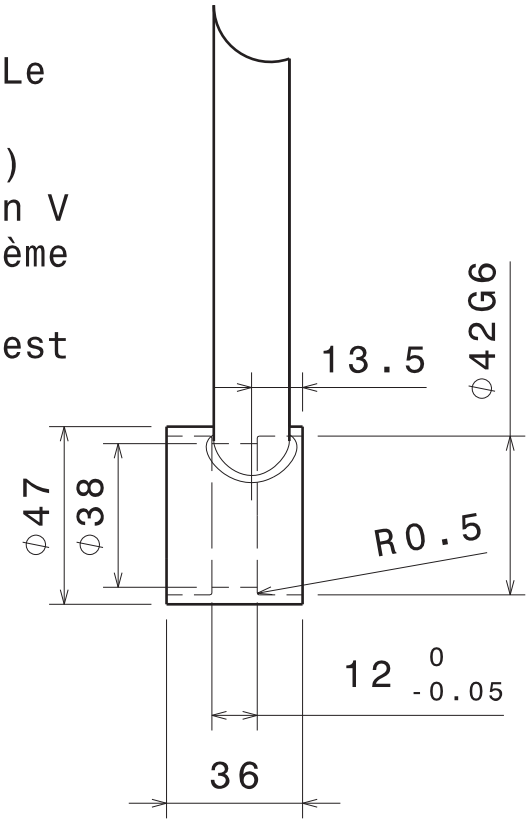

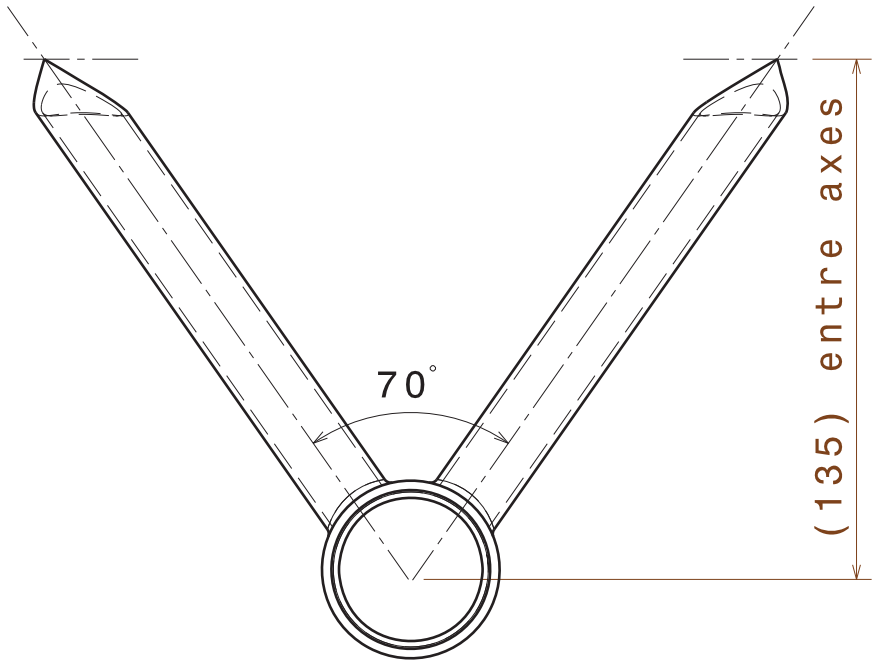

Casser les angles vifs. Tolérances générales ISO 2768 - mK

Taille A4		Ecurie Piston Sport Auto
Dessiné par Mathieu Corbat	Date 24/11/2013	Désignation: Fourreau de volant
Coordonnées 06 32 67 13 97 mathieu.corbat@ecl2015.ec-lyon.fr		Quantité 1 / Matériau Acier S235 / Version 1.0
Vérifié par	Date	Echelle 1:2 / Numéro du plan 14 B006 / Feuille 1/1

325

University	Ecole Centrale de Lyon			**Car #**	81	**Part Cost**	$ 14.33
System	Steering System	**FileLink1**				**Qty**	1
Assembly	Steering Column	**FileLink2**		**FileLink1**			
Part	Steering Wheel	**FileLink3**		**FileLink2**		**Extended Cost**	$ 14.33
P/N Base	01006			**FileLink3**			
Suffix	AA						
Details	Bought part, cost as made						

ItemOrder	Material	Use	UnitCost	Size1	Unit1	Size2	Unit2	Area Name	Area	Length	Density	Quantity	Sub Total
10	Steel, Mild (per kg)	Sheet for the structure 2 mm thickness	$ 2.25	250	mm	230		Rectangular area 250mm x 230mm	5.75E-02	0.002	7 860.00	1	$ 2.03
20	Foam, Expanding, Non-Structural (per kg)	Foam for torus form	$ 15.00	0.1	kg								$ 1.50
30	Fabric (per m^2)	steering wheel covering	$ 2.50	0.1	m^2								$ 0.25
												Sub Total	**$ 3.78**

ItemOrder	Process	Use	UnitCost	Unit	Quantity	Multiplier	Mult. Val.	Sub Total
10	Machining Setup, Install and remove	Setup for laser cut	$ 1.30	unit	1			$ 1.30
20	Laser Cut	Outline and holes for sheet	$ 0.01	cm	100			$ 1.00
30	Assemble, 1 kg, Line-on-Line	Assemble of foam	$ 0.13	unit				$ 0.13
40	Cut (scissors, knife)	Preparation of covering	$ 0.06	cm	100			$ 6.00
50	Liquid Applicator Gun	Apply of covering	$ 0.02	cm	100			$ 2.00
60	Assemble, 1 kg, Line-on-Line	Assemble of covering	$ 0.13	unit				$ 0.13
							Sub Total	**$ 10.55**

University	Ecole Centrale de Lyon			**Car #**	81	**Part Cost**	$ 5.50
System	Steering System	**FileLink1**				**Qty**	1
Assembly	Steering Column	**FileLink2**		**FileLink1**			
Part	First column tube	**FileLink3**		**FileLink2**		**Extended Cost**	$ 5.50
P/N Base	01007			**FileLink3**			
Suffix	AA						
Details							

ItemOrder	Material	Use	UnitCost	Size1	Unit1	Size2	Unit2	Area Name	Area	Length	Density	Quantity	Sub Total
10	Steel, Mild (per kg)	Stock for column washer	$ 2.25	12.5	mm			Round area Radius 12,5mm	4.90E-04	0.104	7 860.00	1	$ 0.90
												Sub Total	**$ 0.90**

ItemOrder	Process	Use	UnitCost	Unit	Quantity	Multiplier	Mult. Val.	Sub Total
10	Machining Setup, Install and remove	Setup for machining and removal	$ 1.30	unit	1			$ 1.30
20	Drilled holes < 25.4 mm dia.	Hole for bushing	$ 0.35	hole	1			$ 0.35
30	Machining	reduction of radius for bearings	$ 0.04	cm^3	13.4	Material Steel	3	$ 1.61
40	Machining Setup, Change	Setup for last machining process	$ 0.65	unit	1			$ 0.65
50	Machining	Hole for quick release welding	$ 0.04	cm^3	2.8	Material Steel	3	$ 0.34
60	Drilled holes < 25.4 mm dia.	Holes for assembly with pins	$ 0.35	hole	1			$ 0.35
							Sub Total	**$ 4.59**

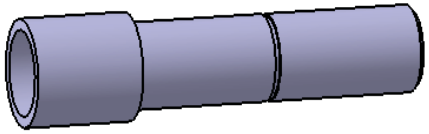

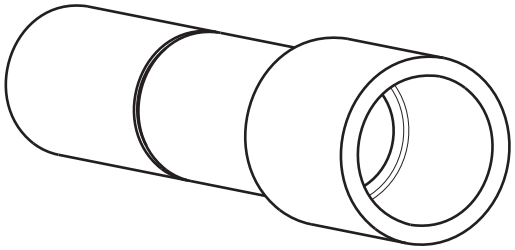

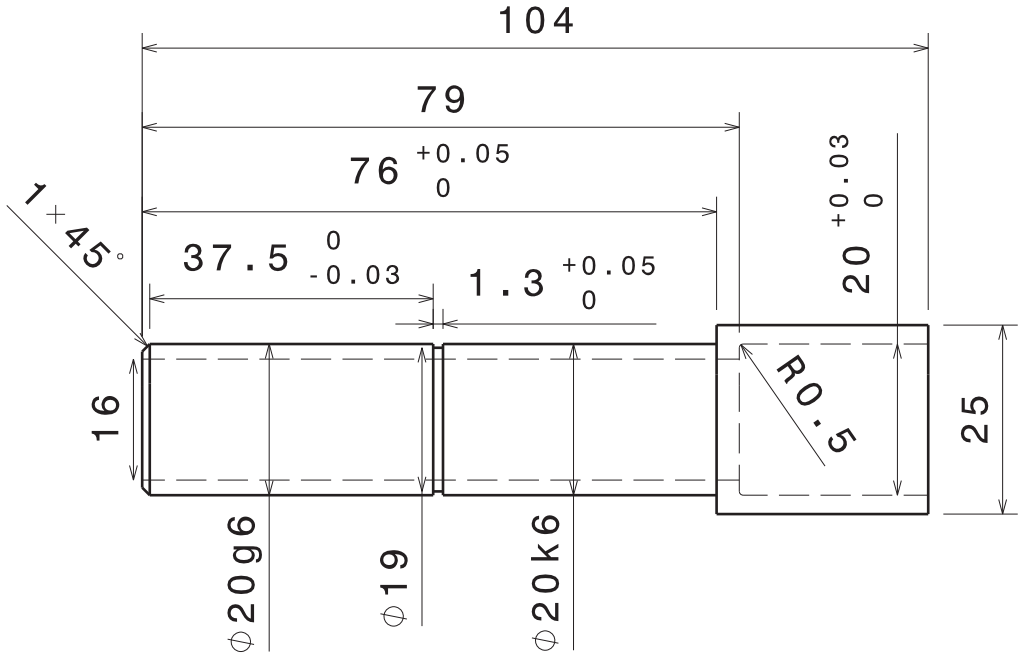

Ajustements de l'extérieur différents pour montage de roulements serrés mais insertion glissante sur le début de l'arbre.

Casser les angles vifs. Tolérances générales ISO 2768 - mK

Taille A4		Ecurie Piston Sport Auto
Dessiné par Mathieu Corbat	Date 24/11/2013	Désignation: Premier tube de colonne
Coordonnées 06 32 67 13 97 mathieu.corbat@ecl2015.ec-lyon.fr		Quantité 1 / Matériau Acier S235 / Version 1.0
Vérifié par	Date	Echelle 1:1 / Numéro du plan 14 B065 / Feuille 1/1

University	Ecole Centrale de Lyon			**Car #**	81	**Part Cost**	$ 1.10
System	Steering System	**FileLink1**				**Qty**	1
Assembly	Steering Column	**FileLink2**		**FileLink1**			
Part	Second column tube	**FileLink3**		**FileLink2**		**Extended Cost**	$ 1.10
P/N Base	01008			**FileLink3**			
Suffix	AA						
Details							

ItemOrder	Material	Use	UnitCost	Size1	Unit1	Size2	Unit2	Area Name	Area	Length	Density	Quantity	Sub Total
10	Tubing, Steel	Tube for steering column	$ 2.25	10	mm	8.5	mm		8.70E-05	0.066	7 860.00	1	$ 0.10
												Sub Total	**$ 0.10**

ItemOrder	Process	Use	UnitCost	Unit	Quantity	Multiplier	Mult. Val.	Sub Total
10	Tube cut	Cut to proper length	$ 0.15	cm	2			$ 0.30
20	Drilled holes < 25.4 mm dia.	Holes for assembly with pins	$ 0.35	hole	2			$ 0.70
							Sub Total	**$ 1.00**

University	Ecole Centrale de Lyon			**Car #**	81	**Part Cost**	$ 1.74
System	Steering System	**FileLink1**				**Qty**	1
Assembly	Steering Column	**FileLink2**		**FileLink1**			
Part	Third column tube	**FileLink3**		**FileLink2**		**Extended Cost**	$ 1.74
P/N Base	01009			**FileLink3**			
Suffix	AA						
Details							

ItemOrder	Material	Use	UnitCost	Size1	Unit1	Size2	Unit2	Area Name	Area	Length	Density	Quantity	Sub Total
10	Tubing, Steel	Tube for steering column	$ 2.25	10	mm	8.5	mm		8.70E-05	0.254	7 860.00	1	$ 0.39
												Sub Total	**$ 0.39**

ItemOrder	Process	Use	UnitCost	Unit	Quantity	Multiplier	Mult. Val.	Sub Total
10	Tube cut	Cut to proper length	$ 0.15	cm	2			$ 0.30
20	Drilled holes < 25.4 mm dia.	Holes for assembly with pins	$ 0.35	hole	3			$ 1.05
							Sub Total	**$ 1.35**

University	Ecole Centrale de Lyon	**Car #**	81	**Asm Cost**	$ 32.54
System	Steering System			**Qty**	1
Assembly	Quick Release	**FileLink1**			
P/N Base	A0002	**FileLink2**		**Extended Cost**	$ 32.54
Suffix	AA	**FileLink3**			
Details	Bought part, cost as made				

ItemOrder	Part	Part Cost	Quantity	Sub Total
10	Quick Release Mount	$ 5.99	1	$ 5.99
20	Quick Release Sliding Part	$ 11.04	1	$ 11.04
30	Quick Release Fixed Part	$ 9.74	1	$ 9.74
			Sub Total	**$ 26.78**

ItemOrder	Material	Use	UnitCost	Size1	Unit1	Size2	Unit2	Area Name	Area	Length	Density	Quantity	Sub Total
10	Spring, Compression (General)	Spring for sliding part (1) and balls (3)	$ 1.00									4	$ 4.00
20	Steel, Mild (per kg)	Balls locking grooves	$ 2.25	5	mm			Balls 5mm diameter			7 860.00	3.00	$ 0.01
												Sub Total	**$ 4.01**

ItemOrder	Process	Use	UnitCost	Unit	Quantity	Multiplier	Mult. Val.	Sub Total
10	Assemble, 1 kg, Line-on-Line	Assemble of Sliding, Fixed parts and spring	$ 0.13	unit	1			$ 0.13
20	Assemble, 1 kg, Interference	Assemble of springs and balls	$ 0.19	unit	1			$ 0.19
30	Weld	Welding of quick release mount on first column tube (steering column)	$ 0.15	cm	6.2			$ 0.93
							Sub Total	**$ 1.25**

ItemOrder	Fastener	Use	UnitCost	Size1	Unit1	Size2	Unit2	Quantity	Sub Total
10	Retaining Ring, Internal	Ring to lock the quick release close	$ 0.18	30	mm			1	$ 0.18
								Sub Total	**$ 0.18**

ItemOrder	Tooling	Use	UnitCost	Unit	Quantity	PVF	FractionIncluded	Sub Total
10	Welds-Welding Fixture	Steel mounts welding on frame	$ 500.00	point	2	3000	1	$ 0.33
							Sub Total	**$ 0.33**

University	Ecole Centrale de Lyon			**Car #**	81	**Part Cost**	$ 5.99
System	Steering System	**FileLink1**				**Qty**	1
Assembly	Quick Release	**FileLink2**		**FileLink1**			
Part	Quick Release Mount	**FileLink3**		**FileLink2**		**Extended Cost**	$ 5.99
P/N Base	02001			**FileLink3**			
Suffix	AA						
Details							

ItemOrder	Material	Use	UnitCost	Size1	Unit1	Size2	Unit2	Area Name	Area	Length	Density	Quantity	Sub Total
10	Steel, Mild (per kg)	Steel for machining the part	$ 2.25	12.5	mm			Cylinder area Radius 12,5mm	4.90E-04	0.073	7 860.00	1	$ 0.63
												Sub Total	**$ 0.633**

ItemOrder	Process	Use	UnitCost	Unit	Quantity	Multiplier	Mult. Val.	Sub Total
10	Machining Setup, Install and remove	Setup for machining	$ 1.30	unit	1			$ 1.30
20	Machining	Material removal	$ 0.04	cm^3	13	Material Steel	3	$ 1.56
30	Broach, External	Broach for external groove	$ 0.50	cm	5			$ 2.50
							Sub Total	**$ 5.36**

University	Ecole Centrale de Lyon			**Car #**	81	**Part Cost**	$ 11.04
System	Steering System	**FileLink1**				**Qty**	1
Assembly	Quick Release	**FileLink2**		**FileLink1**			
Part	Quick Release Sliding Part	**FileLink3**		**FileLink2**		**Extended Cost**	$ 11.04
P/N Base	02002			**FileLink3**			
Suffix	AA						
Details							

ItemOrder	Material	Use	UnitCost	Size1	Unit1	Size2	Unit2	Area Name	Area	Length	Density	Quantity	Sub Total
10	Aluminium, normal (per kg)	Material for column mount	$ 4.20	35.5	mm			Round Area Radius 35,5mm	3.90E-03	0.055	2 710.00	1	$ 2.44
												Sub Total	**$ 2.44**

ItemOrder	Process	Use	UnitCost	Unit	Quantity	Multiplier	Mult. Val.	Sub Total
10	Machining Setup, Install and remove	Setup for machining	$ 1.30	unit	1			$ 1.30
20	Machining	Material removal	$ 0.04	cm^3	120	Material - Aluminum	1	$ 4.80
30	Broach, Internal	Broach for internal groove	$ 0.50	cm	5			$ 2.50
40	Annodize		Free					
							Sub Total	**$ 8.60**

University	Ecole Centrale de Lyon			**Car #**	81	**Part Cost**	$ 9.74
System	Steering System	**FileLink1**				**Qty**	1
Assembly	Quick Release	**FileLink2**		**FileLink1**			
Part	Quick Release Fixed Part	**FileLink3**		**FileLink2**		**Extended Cost**	$ 9.74
P/N Base	02003			**FileLink3**			
Suffix	AA						
Details							

ItemOrder	Material	Use	UnitCost	Size1	Unit1	Size2	Unit2	Area Name	Area	Length	Density	Quantity	Sub Total
10	Aluminium, normal (per kg)	Material for column mount	$ 4.20	35.5	mm			Round Area Radius 35,5mm	3.90E-03	0.055	2 710.00	1	$ 2.44
												Sub Total	**$ 2.44**

ItemOrder	Process	Use	UnitCost	Unit	Quantity	Multiplier	Mult. Val.	Sub Total
10	Machining Setup, Install and remove	Setup for machining	$ 1.30	unit	1			$ 1.30
20	Machining	Material removal	$ 0.04	cm^3	150	Material - Aluminum	1	$ 6.00
30	Annodize		Free					
							Sub Total	**$ 7.30**

University	Ecole Centrale de Lyon	Car #	81	Asm Cost	$ 22.34
System	Steering System			Qty	2
Assembly	Tie Rod Assembly	FileLink1			
P/N Base	A0003	FileLink2		Extended Cost	$ 44.67
Suffix	AA	FileLink3			
Details					

ItemOrder	Part	Part Cost	Quantity	Sub Total
10	Tie Rod Insert	$ 2.41	2	$ 4.82
20	Upright Tapered Spacer	$ 1.66	2	$ 3.31
30	Rack Tapered Spacer	$ 1.67	2	$ 3.34
40	Rod Tube	$ 0.53	1	$ 0.53
			Sub Total	$ 12.01

ItemOrder	Material	Use	UnitCost	Size1	Unit1	Size2	Unit2	Area Name	Area	Length	Density	Quantity	Sub Total
10	Paint	Tie rod painting	$ 10.00	0.017	m^2							0.017	$ 0.17
20	Rod End, Industrial	Rod End for tie rod extremities	$ 1.94	6	mm							2	$ 3.88
												Sub Total	$ 4.05

ItemOrder	Process	Use	UnitCost	Unit	Quantity	Multiplier	Mult. Val.	Sub Total
10	Weld	Welding of inserts on tube	$ 0.15	cm	7.5			$ 1.13
20	Aerosol apply	Tie rod painting	$ 5.25	m^2	0.017		1	$ 0.09
30	Ratchet <= 6.35 mm	Put the nuts on the bolts	$ 0.50	unit	2			$ 1.00
40	Reaction Tool <= 6.35 mm	Tighten the nut	$ 0.25	unit	2			$ 0.50
50	Wrench <= 6.35 mm	Put the nuts on the rod ends	$ 1.00	unit	2			$ 2.00
60	Reaction Tool <= 6.35 mm	Tighten the nut	$ 0.25	unit	2			$ 0.50
							Sub Total	$ 5.21

ItemOrder	Fastener	Use	UnitCost	Size1	Unit1	Size2	Unit2	Quantity	Sub Total
10	Bolt, Grade 8.8 (SAE 5)	Bolt linking to rack and wheels	$ 0.12	6	mm	50	mm	2	$ 0.23
20	Nut, Grade 8.8 (SAE 5)	Nut to lock bearing	$ 0.03	6	mm			2	$ 0.06
30	Nut, Grade 8.8 (SAE 5)	Nuts for bolts	$ 0.03	6	mm			2	$ 0.06
40	Washer, Grade 8.8 (SAE 5)	Washers for bolts	$ 0.01					4	$ 0.04
								Sub Total	$ 0.39

ItemOrder	Tooling	Use	UnitCost	Unit	Quantity	PVF	FractionIncluded	Sub Total
10	Welds-Welding Fixture	Steel mounts welding on frame	$ 500.00	point	4	3000	1	$ 0.67
							Sub Total	$ 0.67

University	Ecole Centrale de Lyon			**Car #**	81	**Part Cost**	$ 2.41
System	Steering System	**FileLink1**				**Qty**	4
Assembly	Tie Rod Assembly	**FileLink2**		**FileLink1**			
Part	Tie Rod Inserts	**FileLink3**		**FileLink2**		**Extended Cost**	$ 9.65
P/N Base	03001			**FileLink3**			
Suffix	AA						
Details							

ItemOrder	Material	Use	UnitCost	Size1	Unit1	Size2	Unit2	Area Name	Area	Length	Density	Quantity	Sub Total
10	Steel, Mild (per kg)	Stock for column washer	$ 2.25	6	mm			Round area Radius 6mm	1.13E-04	0.020	7 860.00	1	$ 0.04
												Sub Total	**$ 0.04**

ItemOrder	Process	Use	UnitCost	Unit	Quantity	Multiplier	Mult. Val.	Sub Total
10	Machining Setup, Install and remove	Setup for machining and removal	$ 1.30	unit	1			$ 1.30
20	Machining	Reduction for rod assembly	$ 0.04	cm^3	0.5	Material Steel	3	$ 0.06
30	Tapping holes	Right-hand and left-hand (2 parts each)	$ 0.35	hole	1			$ 0.35
40	Machining Setup, Change	Setup for last machining process	$ 0.65	unit	1			$ 0.65
50	Machining	Surfaces for easy torquing	$ 0.04	cm^3	0.1	Material Steel	3	$ 0.01
							Sub Total	**$ 2.37**

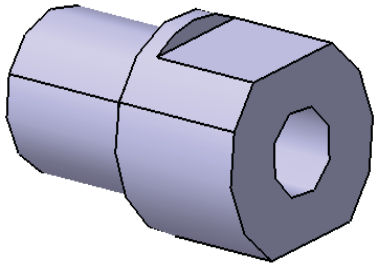

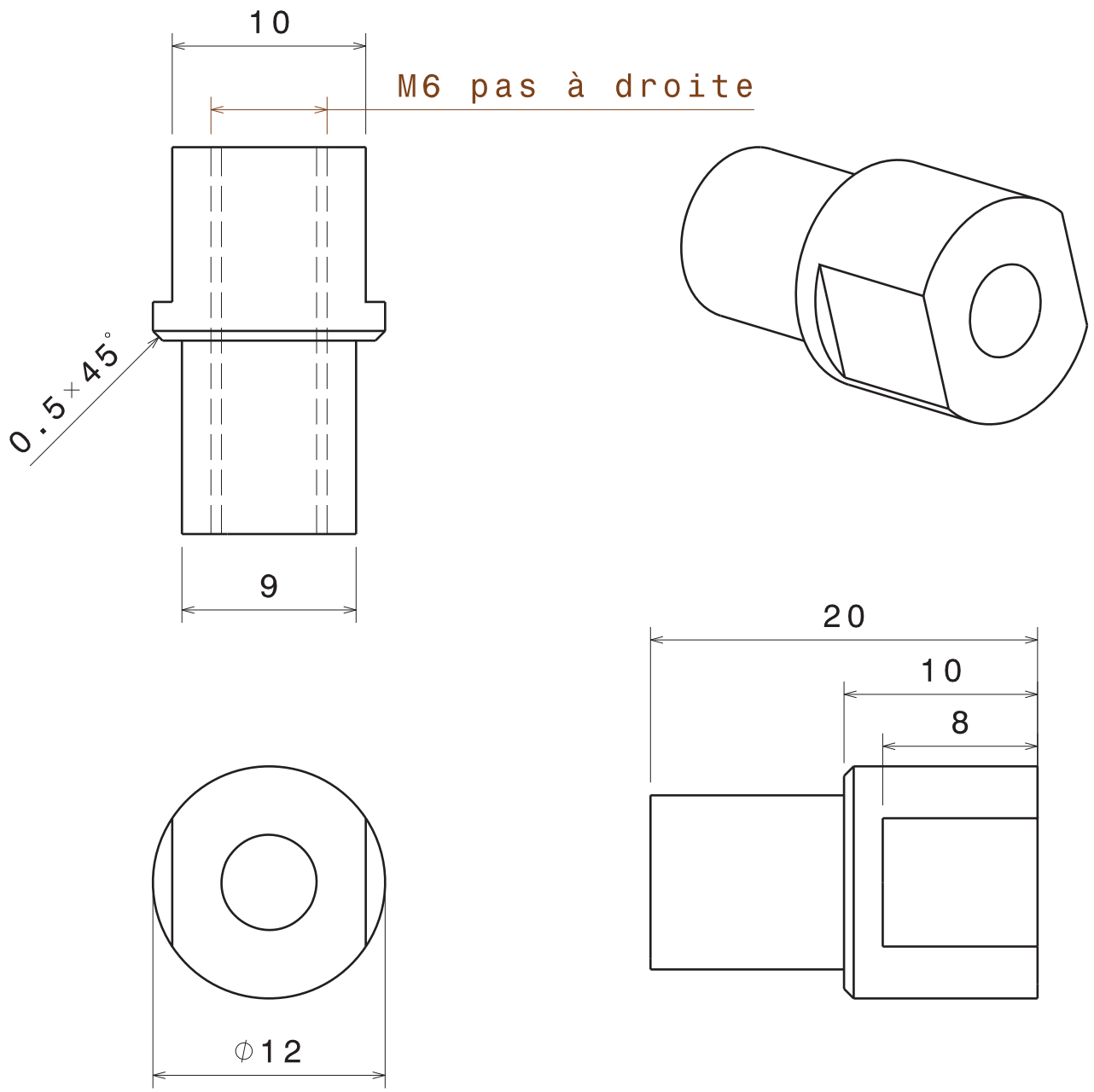

Casser les angles vifs. Tolérances générales ISO 2768 - mK

Taille A4		Ecurie Piston Sport Auto	
Dessiné par Mathieu Corbat	Date 11/11/2013	Désignation Insert direction (pas à droite)	
Coordonnées 06 32 67 13 97 mathieu.corbat@ecl2015.ec-lyon.fr		Quantité 2	Matériau Acier S235	Version 1.0
Vérifié par	Date	Echelle 3:1	Numéro du plan 14 M103	Feuille 1/1

University	Ecole Centrale de Lyon			**Car #**	81	**Part Cost**	$ 1.66
System	Steering System	**FileLink1**				**Qty**	4
Assembly	Tie Rod Assembly	**FileLink2**		**FileLink1**			
Part	Upright tapered spacer	**FileLink3**		**FileLink2**		**Extended Cost**	$ 6.63
P/N Base	03002			**FileLink3**			
Suffix	AA						
Details							

ItemOrder	Material	Use	UnitCost	Size1	Unit1	Size2	Unit2	Area Name	Area	Length	Density	Quantity	Sub Total
10	Aluminium, normal (per kg)	Material for column mount	$ 4.20	7	mm			Round area Radius 7mm	1.54E-04	0.004	2 710.00	1	$ 0.01
												Sub Total	**$ 0.01**

ItemOrder	Process	Use	UnitCost	Unit	Quantity	Multiplier	Mult. Val.	Sub Total
10	Machining Setup, Install and remove	Setup for machining and removal	$ 1.30	unit	1			$ 1.30
20	Machining	Material removal - side view profile	$ 0.04	cm^3	0.033	Material - Aluminum	1	$ 0.00
30	Drilled holes < 25.4 mm dia.	Holes for assembly	$ 0.35	hole	1			$ 0.35
							Sub Total	**$ 1.65**

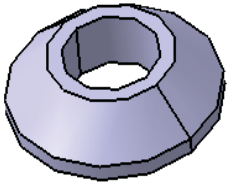

University	Ecole Centrale de Lyon			**Car #**	81	**Part Cost**	$ 1.67
System	Steering System	**FileLink1**				**Qty**	4
Assembly	Tie Rod Assembly	**FileLink2**		**FileLink1**			
Part	Rack tapered spacer	**FileLink3**		**FileLink2**		**Extended Cost**	$ 6.68
P/N Base	03003			**FileLink3**			
Suffix	AA						
Details							

ItemOrder	Material	Use	UnitCost	Size1	Unit1	Size2	Unit2	Area Name	Area	Length	Density	Quantity	Sub Total
10	Aluminium, normal (per kg)	Material for column mount	$ 4.20	7	mm			Round area Radius 7mm	1.54E-04	0.007	2 710.00	1	$ 0.01
												Sub Total	**$ 0.01**

ItemOrder	Process	Use	UnitCost	Unit	Quantity	Multiplier	Mult. Val.	Sub Total
10	Machining Setup, Install and remove	Setup for machining and removal	$ 1.30	unit	1			$ 1.30
20	Machining	Material removal - side view profile	$ 0.04	cm^3	0.23	Material - Aluminum	1	$ 0.01
30	Drilled holes < 25.4 mm dia.	Holes for assembly	$ 0.35	hole	1			$ 0.35
							Sub Total	**$ 1.66**

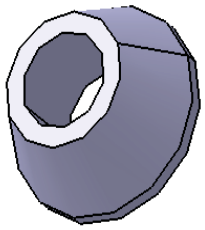

University	Ecole Centrale de Lyon			**Car #**	81	**Part Cost**	$ 0.53
System	Steering System	**FileLink1**				**Qty**	2
Assembly	Tie Rod Assembly	**FileLink2**		**FileLink1**			
Part	Rod tube	**FileLink3**		**FileLink2**		**Extended Cost**	$ 1.06
P/N Base	03004			**FileLink3**			
Suffix	AA						
Details							

ItemOrder	Material	Use	UnitCost	Size1	Unit1	Size2	Unit2	Area Name	Area	Length	Density	Quantity	Sub Total
10	Tubing, Steel	Tube for rod	$ 2.25	6	mm	4.5	mm		4.95E-05	0.402	7 860.00	1	$ 0.35
												Sub Total	**$ 0.35**

ItemOrder	Process	Use	UnitCost	Unit	Quantity	Multiplier	Mult. Val.	Sub Total
10	Tube cut	Cut to proper length	$ 0.15	cm	1.2			$ 0.18
							Sub Total	**$ 0.18**

University	Ecole Centrale de Lyon	Car #	81	Asm Cost	$ 61.66
System	Steering System			Qty	1
Assembly	Steering rack assembly	FileLink1			
P/N Base	A0004	FileLink2		Extended Cost	$ 61.66
Suffix	AA	FileLink3			
Details					

ItemOrder	Part	Part Cost	Quantity	Sub Total
10	Rack	$ 3.62	1	$ 3.62
20	Rack pinion	$ 10.32	1	$ 10.32
30	Rack housing	$ 11.85	1	$ 11.85
40	Lower Rack Mount	$ 4.09	2	$ 8.17
50	Upper rack mount	$ 2.43	2	$ 4.86
60	Rack stop	$ 4.04	2	$ 8.09
70	Rack protection	$ 6.61	1	$ 6.61
			Sub Total	$ 53.51

ItemOrder	Material	Use	UnitCost	Size1	Unit1	Size2	Unit2	Area Name	Area	Length	Density	Quantity	Sub Total
10	Grease Nipple, Straight	Nipple to grease the rack	$ 0.50	unit								1	$ 0.50
												Sub Total	$ 0.50

ItemOrder	Process	Use	UnitCost	Unit	Quantity	Multiplier	Mult. Val.	Sub Total
10	Weld	Welding of lower mount	$ 0.15	cm	7.5			$ 1.13
20	Assemble, 1 kg, Line-on-Line	Assemble the rack in the rack housing	$ 0.13	unit	1			$ 0.13
30	Assemble, 1 kg, Line-on-Line	Assemble the pinion, the grease nipple and the retaining ring in the rack housing	$ 0.13	unit	1			$ 0.13
40	Assemble, 1 kg, Line-on-Line	Assemble rack stop on the rack	$ 0.13	unit	2			$ 0.25
50	Ratchet <= 6.35 mm	Put the bolts to lock the rack stops	$ 0.50	unit	2			$ 1.00
60	Reaction Tool <= 6.35 mm	Tighten the nut	$ 0.25	unit	2			$ 0.50
70	Assemble, 1 kg, Interference	Assemble the rack on the lower mounts	$ 0.19	unit	1			$ 0.19
80	Assemble, 1 kg, Line-on-Line	Assemble the upper mounts	$ 0.13	unit	2			$ 0.25
90	Ratchet <= 6.35 mm	Put the bolts onto the mounts	$ 0.50	unit	2			$ 1.00
100	Reaction Tool <= 6.35 mm	Tighten the nut	$ 0.25	unit	2			$ 0.50
							Sub Total	$ 5.06

ItemOrder	Fastener	Use	UnitCost	Size1	Unit1	Size2	Unit2	Quantity	Sub Total
10	Bolt, Grade 8.8 (SAE 5)	Bolts betwen rack mounts	$ 0.09	6	mm	40	mm	4	$ 0.36

20	Nut, Grade 8.8 (SAE 5)	Nuts for bolts	$ 0.03	6	mm			4	$ 0.12
30	Washer, Grade 8.8 (SAE 5)	Washers for bolts	$ 0.01					8	$ 0.08
40	Bolt, Grade 8.8 (SAE 5)	Bolts for rack stops	$ 0.53	12	mm	50	mm	2	$ 1.06
50	Retaining Ring, Internal	ring retaining the pinion	$ 0.30	40.00	mm			1	$ 0.30
								Sub Total	**$ 1.92**

ItemOrder	Tooling	Use	UnitCost	Unit	Quantity	PVF	FractionIncluded	Sub Total
10	Welds-Welding Fixture	lower mounts welding on frame	$ 500.00	point	4	3000	1	$ 0.67
							Sub Total	**$ 0.67**

University	Ecole Centrale de Lyon			**Car #**	81	**Part Cost**	$ 3.62
System	Steering System	**FileLink1**				**Qty**	1
Assembly	Steering rack assembly	**FileLink2**		**FileLink1**			
Part	Rack	**FileLink3**		**FileLink2**		**Extended Cost**	$ 3.62
P/N Base	04001			**FileLink3**			
Suffix	AA						
Details	Bought part, cost as made						

ItemOrder	Material	Use	UnitCost	Size1	Unit1	Size2	Unit2	Area Name	Area	Length	Density	Quantity	Sub Total
10	Steel, Mild (per kg)	Stock for the rack	$ 2.25	10	mm			Round area Radius 10mm	3.14E-04	0.300	7 860.00	1	$ 1.67
												Sub Total	**$ 1.67**

ItemOrder	Process	Use	UnitCost	Unit	Quantity	Multiplier	Mult. Val.	Sub Total
10	Drilled holes < 25.4 mm dia.	Holes for tie rod assembling	$ 0.35	hole	2		1	$ 0.70
20	Broach, External	Teeth machining	$ 0.50	cm	2.5			$ 1.25
							Sub Total	**$ 1.95**

University	Ecole Centrale de Lyon			**Car #**	81	**Part Cost**	$ 10.32
System	Steering System	**FileLink1**				**Qty**	1
Assembly	Steering rack assembly	**FileLink2**		**FileLink1**			
Part	Rack pinion	**FileLink3**		**FileLink2**		**Extended Cost**	$ 10.32
P/N Base	04002			**FileLink3**			
Suffix	AA						
Details	Bought part, cost as made						

ItemOrder	Material	Use	UnitCost	Size1	Unit1	Size2	Unit2	Area Name	Area	Length	Density	Quantity	Sub Total
10	Steel, Mild (per kg)	Stock for the pinion	$ 2.25	25	mm			Round area Radius 25mm	2.00E-03	0.050	7 860.00	1	$ 1.77
												Sub Total	**$ 1.77**

ItemOrder	Process	Use	UnitCost	Unit	Quantity	Multiplier	Mult. Val.	Sub Total
10	Machining Setup, Install and remove		$ 1.30	unit	1			$ 1.30
20	Machining	Machining the form to insert the column	$ 0.04	cm^3	50	Steel	3.00	$ 6.00
30	Broach, External	Teeth machining	$ 0.50	cm	2.5			$ 1.25
							Sub Total	**$ 8.55**

University	Ecole Centrale de Lyon			**Car #**	81	**Part Cost**	$ 11.85
System	Steering System	**FileLink1**				**Qty**	1
Assembly	Steering rack assembly	**FileLink2**		**FileLink1**			
Part	Rack Housing	**FileLink3**		**FileLink2**		**Extended Cost**	$ 11.85
P/N Base	04003			**FileLink3**			
Suffix	AA						
Details	Bought part, cost as made						

ItemOrder	Material	Use	UnitCost	Size1	Unit1	Size2	Unit2	Area Name	Area	Length	Density	Quantity	Sub Total
10	Aluminium, normal (per kg)	Material for the rack houisng	$ 4.20	0.3	kg							1	$ 1.26
												Sub Total	**$ 1.26**

ItemOrder	Process	Use	UnitCost	Unit	Quantity	Multiplier	Mult. Val.	Sub Total
10	Die casting	Housing Casting	$ 4.00	kg	0.3			$ 1.20
20	Machining Setup, Install and remove		$ 1.30		1			$ 1.30
30	Machining	Machining making proper surfaces	$ 0.04	cm^3	18	Material - Aluminum	1	$ 0.72
40	Ream hole	Reamed hole for the rack translation	$ 0.35	hole	2			$ 0.70
							Sub Total	**$ 3.92**

ItemOrder	Tooling	Use	UnitCost	Unit	Quantity	PVF	FracIncld	Sub Total
10	Die casting -Die		$ 10 000.00	die	2	3000	1	$ 6.67
							Sub Total	**$ 6.67**

University	Ecole Centrale de Lyon			**Car #**	81	**Part Cost**	$ 4.09
System	Steering System	**FileLink1**				**Qty**	2
Assembly	Steering rack assembly	**FileLink2**		**FileLink1**			
Part	Lower rack mount	**FileLink3**		**FileLink2**		**Extended Cost**	$ 8.17
P/N Base	04004			**FileLink3**			
Suffix	AA						
Details							

ItemOrder	Material	Use	UnitCost	Size1	Unit1	Size2	Unit2	Area Name	Area	Length	Density	Quantity	Sub Total
10	Steel, Mild (per kg)	Stock	$ 2.25	60	mm	70	mm	Rectangular area 60mm x 70mm	4.20E-03	0.015	7,860.00	1	$ 1.08
												Sub Total	**$ 1.08**

ItemOrder	Process	Use	UnitCost	Unit	Quantity	Multiplier	Mult. Val.	Sub Total
10	Machining Setup, Install and remove	Setup for laser cut	$ 1.30	unit	1			$ 1.30
20	Laser Cut	Outline and holes	$ 0.01	cm	33.6	Material - Steel	3	$ 1.01
30	Drilled holes < 25.4 mm dia.	Holes	$ 0.35	hole	2			$ 0.70
							Sub Total	**$ 3.01**

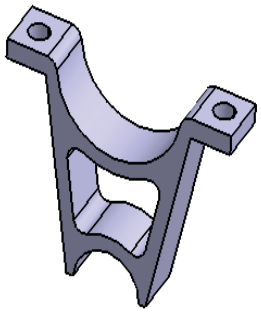

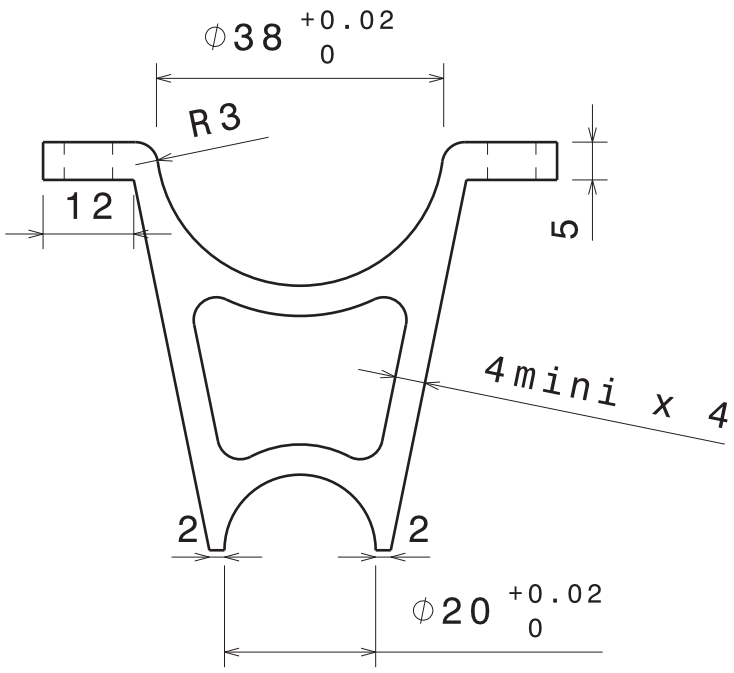

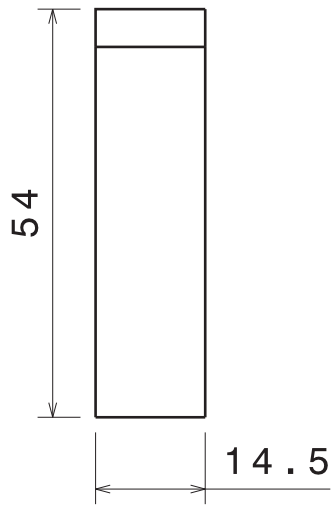

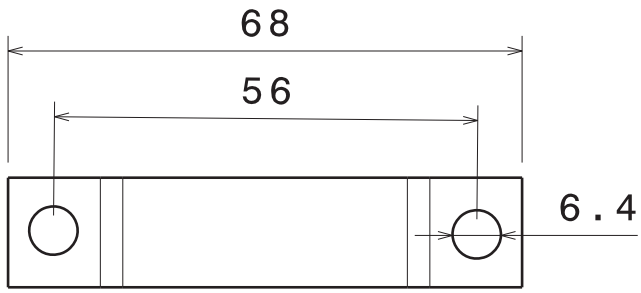

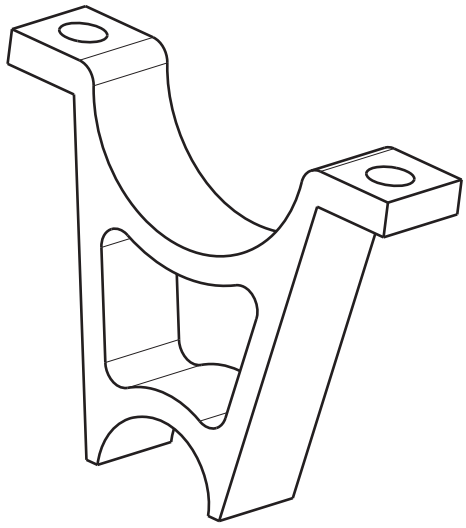

Casser les angles vifs. Tolérances générales ISO 2768 - mK

Taille A4		Ecurie Piston Sport Auto
Dessiné par Mathieu Corbat	Date 18/11/2013	Désignation: Chape crémaillère inférieure
Coordonnées 06 32 67 13 97 mathieu.corbat@ecl2015.ec-lyon.fr		Quantité 2 / Matériau Acier S235 / Version 1.0
Vérifié par	Date	Echelle 1:1 / Numéro du plan 14 B008 / Feuille 1/1

University	Ecole Centrale de Lyon			**Car #**	81	**Part Cost**	$ 2.43
System	Steering System	**FileLink1**				**Qty**	2
Assembly	Steering rack assembly	**FileLink2**		**FileLink1**			
Part	Upper Rack Mount	**FileLink3**		**FileLink2**		**Extended Cost**	$ 4.86
P/N Base	04005			**FileLink3**			
Suffix	AA						
Details							

ItemOrder	Material	Use	UnitCost	Size1	Unit1	Size2	Unit2	Area Name	Area	Length	Density	Quantity	Sub Total
10	Aluminium, normal (per kg)	Material for column mount	$ 4.20	68	mm	20	mm	Rectangular area 68mm x 20mm	1.36E-03	0.015	2 710.00	1	$ 0.22
												Sub Total	**$ 0.22**

ItemOrder	Process	Use	UnitCost	Unit	Quantity	Multiplier	Mult. Val.	Sub Total
10	Machining Setup, Install and remove	Setup for machining and removal	$ 1.30	unit	1			$ 1.30
20	Machining	Material removal - side view profile	$ 0.04	cm^3	5.2	Material - Aluminum	1	$ 0.21
30	Drilled holes < 25.4 mm dia.	Holes for assembly	$ 0.35	hole	2			$ 0.70
							Sub Total	**$ 2.21**

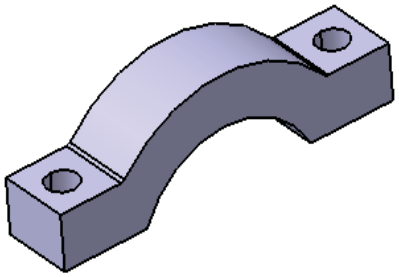

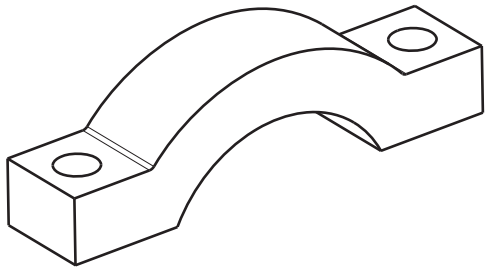

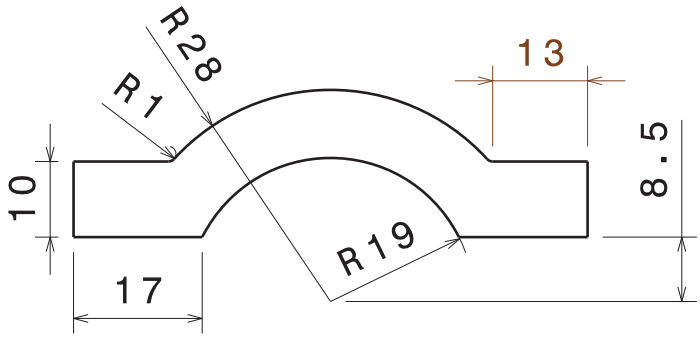

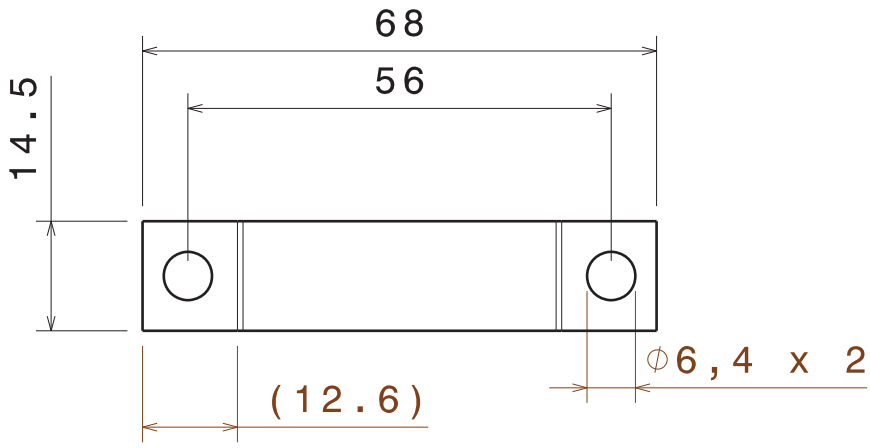

Casser les angles vifs. Tolérances générales ISO 2768 - mK

Taille A4		Ecurie Piston Sport Auto	
Dessiné par Mathieu Corbat	Date 11/11/2013	Désignation Chape Crémaillère Sup	
Coordonnées 06 32 67 13 97 mathieu.corbat@ecl2015.ec-lyon.fr		Quantité 2	Matériau Aluminium 2017	Version 1.0
Vérifié par	Date	Echelle 1:1	Numéro du plan 14 M106	Feuille 1/1

University	Ecole Centrale de Lyon			**Car #**	81	**Part Cost**	$ 4.04
System	Steering System	**FileLink1**				**Qty**	2
Assembly	Steering rack assembly	**FileLink2**		**FileLink1**			
Part	Rack Stop	**FileLink3**		**FileLink2**		**Extended Cost**	$ 8.09
P/N Base	04006			**FileLink3**			
Suffix	AA						
Details							

ItemOrder	Material	Use	UnitCost	Size1	Unit1	Size2	Unit2	Area Name	Area	Length	Density	Quantity	Sub Total
10	Aluminium, normal (per kg)	Material for column mount	$ 4.20	26	mm	28	mm	Rectangular area 26mm x 28mm	7.28E-04	0.040	2 710.00	1	$ 0.33
												Sub Total	**$ 0.33**

ItemOrder	Process	Use	UnitCost	Unit	Quantity	Multiplier	Mult. Val.	Sub Total
10	Machining Setup, Install and remove	Setup for machining and removal	$ 1.30	unit	1			$ 1.30
20	Machining	Material removal - side view profile	$ 0.04	cm^3	0.22	Material - Aluminum	1	$ 0.01
30	Drilled holes < 25.4 mm dia.	Hole for assembly	$ 0.35	hole	1			$ 0.35
40	Machining Setup, Change	Setup for last machining process	$ 0.65	unit	1			$ 0.65
50	Drilled holes < 25.4 mm dia.	Hole for assembly	$ 0.35	hole	1			$ 0.35
60	Machining	Hole for rack assembly	$ 0.04	cm^3	1.5	Material - Aluminum	1	$ 0.06
70	Machining Setup, Change	Setup for last machining process	$ 0.65	unit	1			$ 0.65
80	Machining	Hole for rod assembly	$ 0.04	cm^3	8.6	Material - Aluminum	1	$ 0.34
							Sub Total	**$ 3.71**

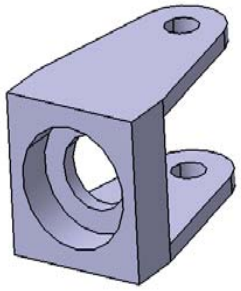

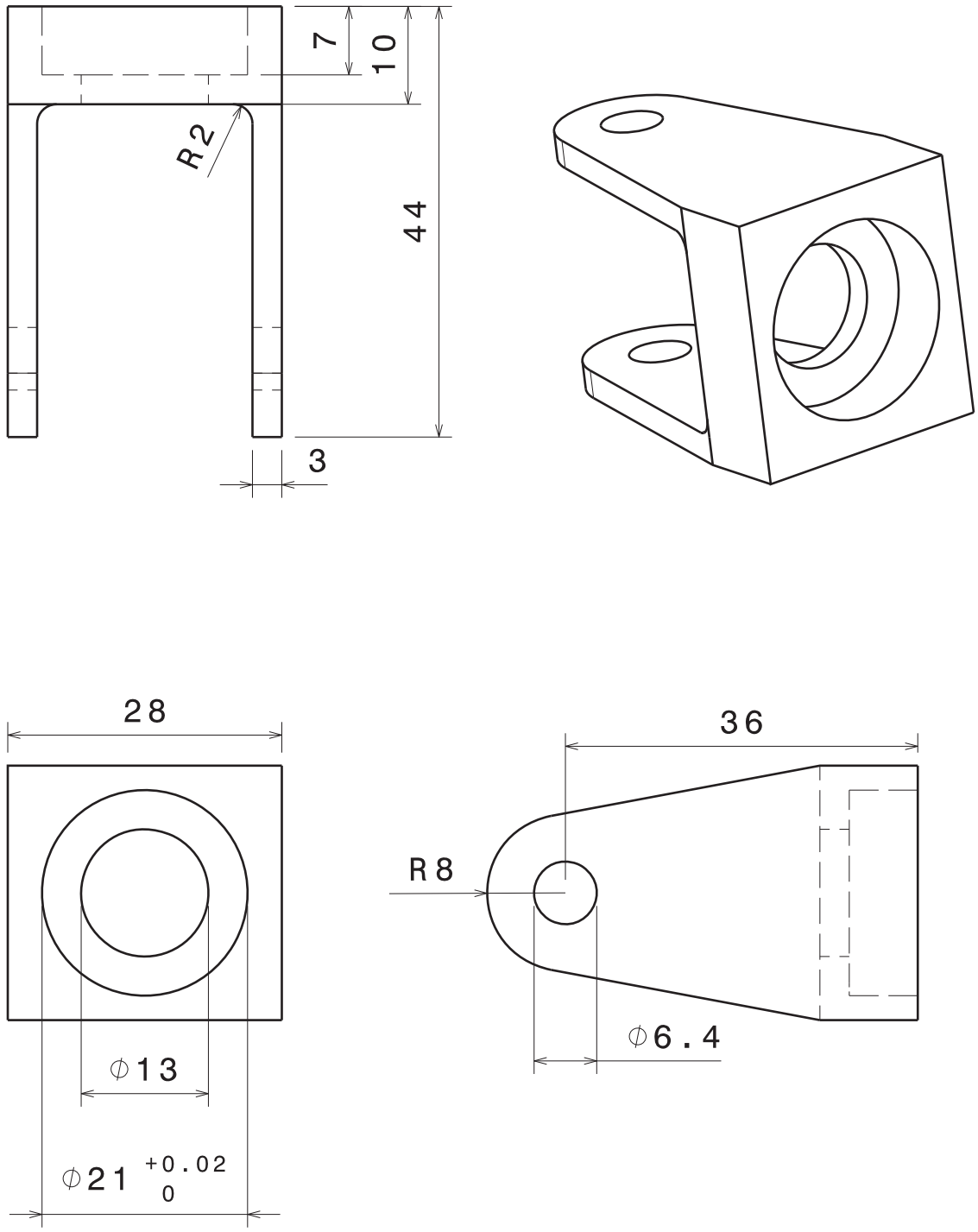

Casser les angles vifs. Tolérances générales ISO 2768 - mK

Taille A4		Ecurie Piston Sport Auto
Dessiné par Mathieu Corbat	Date 11/11/2013	Désignation: Butée direction
Coordonnées 06 32 67 13 97 mathieu.corbat@ecl2015.ec-lyon.fr		Quantité: 2 / Matériau: Aluminium 2017 / Version: 1.0
Vérifié par	Date	Echelle 3:2 / Numéro du plan 14 M105 / Feuille 1/1

University	Ecole Centrale de Lyon			**Car #**	81	**Part Cost**	$ 6.61
System	Steering System	**FileLink1**				**Qty**	1
Assembly	Steering Column	**FileLink2**		**FileLink1**			
Part	Steering rack assembly	**FileLink3**		**FileLink2**		**Extended Cost**	$ 6.61
P/N Base	04007			**FileLink3**			
Suffix	AA						
Details							

ItemOrder	Material	Use	UnitCost	Size1	Unit1	Size2	Unit2	Area Name	Area	Length	Density	Quantity	Sub Total
10	Aluminium, normal (per kg)	Sheet with 2 mm thickness	$ 4.20	300	mm	440	mm	Rectangular area 300mm x 440mm	1.32E-01	0.002	2,710.00	1	$ 3.00
20	Grommet, Elastomer	Grommet for seat rear edge	$ 0.05									5	$ 0.25
												Sub Total	**$ 3.25**

ItemOrder	Process	Use	UnitCost	Unit	Quantity	Multiplier	Mult. Val.	Sub Total
10	Machining Setup, Install and remove	Setup for machining and removal	$ 1.30	unit	1			$ 1.30
20	Laser Cut	Outline and holes	$ 0.01	cm	150			$ 1.50
30	Sheet metal bends	for edge bends	$ 0.25	bend	1			$ 0.25
40	Assemble, 1 kg, Loose	Attach elastomar on the edges	$ 0.06	unit	5			$ 0.31
							Sub Total	**$ 3.36**

SUSPENSION

EPSA TEAM CAR # 81

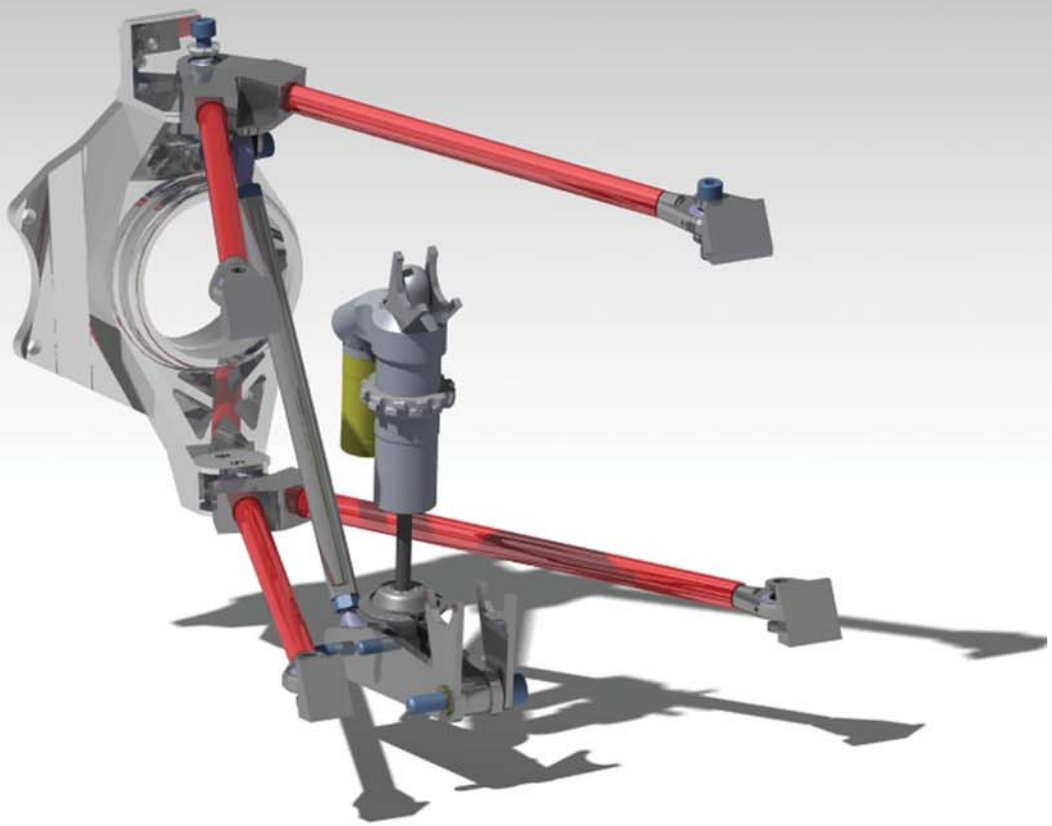

University	Ecole Centrale de Lyon	**Car #**	81	**Asm Cost**	$ 100.92
System	Suspension			**Qty**	2
Assembly	Lower Front A-Arms	**FileLink1**			
P/N Base	A0001	**FileLink2**		**Extended Cost**	$ 201.84
Suffix	AA	**FileLink3**			
Details	Steel A-Arms				

ItemOrder	Part	Part Cost	Quantity	Sub Total
10	Lower Front A arm mounts	$ 8.70	2	$ 17.39
20	Simple insert	$ 3.15	2	$ 6.30
30	Bearing support	$ 4.39	2	$ 8.78
40	Lower front double insert	$ 15.85	1	$ 15.85
50	Spacer	$ 1.33	4	$ 5.34
			Sub Total	**$ 53.67**

ItemOrder	Material	Use	UnitCost	Size1	Unit1	Size2	Unit2	Area Name	Area	Length	Density	Quantity	Sub Total
10	Steel, alloy	Lower steel tube 1	$ 2.25	0.015	m	0.013	m	Round 15mm x 1mm	4.40E-05	0.31	7,860.00	1	$ 0.24
20	Steel, alloy	Lower steel tube 2	$ 2.25	0.015	m	0.013	m	Round 15mm x 1mm	4.40E-05	0.296	7,860.00	1	$ 0.23
30	Bearing,spherical	Link to uprights	$ 6.92	8	mm							3	$ 20.76
40	Paint	Mounts and A-arms painting	$ 10.00	0.135	m^2							0.15	$ 1.50
50	Adhesive	Glue for bearings in inserts - cost included in process	$ -										$ -
												Sub Total	**$ 22.73**

ItemOrder	Process	Use	UnitCost	Unit	Quantity	Multiplier	Mult. Val.	Sub Total
10	Weld	Steel mounts welding	0.15	cm	22			$ 3.30
20	Aerosol apply	Steel mounts painting	$ 5.25	m^2	0.015			$ 0.08
30	Weld	Bearing supports welding on simple inserts	$ 0.15	cm	3			$ 0.45
40	Tube, cut	Lower steel tube 1	$ 0.15	cm	1.5			$ 0.23
50	Tube, cut	Lower steel tube 2	$ 0.15	cm	1.5			$ 0.23
60	Weld	Steel tubes welding on simple inserts	$ 0.15	cm	9			$ 1.35
70	Weld	Steel tubes welding on double inserts	$ 0.15	cm	5			$ 0.75
80	Brush apply	Glue applying on inserts bores	$ 0.02	cm^2	20			$ 0.40
90	Assemble, 1kg, Interference	Bearings in inserts bores installation	$ 0.19		3			$ 0.57
100	Ratchet <=6,35mm	M3 headless bolts installation	$ 0.50		2			$ 1.00
110	Ratchet <=6,35mm	M4 headless bolts installation	$ 0.50		4			$ 2.00
120	Aerosol apply	A-arms painting	$ 5.25	m^2	0.12			$ 0.63
130	Assemble, 3kg, Loose	A arms positioning on steel mounts	$ 0.19		1			$ 0.19
140	Assemble, 1kg, Line on line	Spacers installation	$ 0.13		4			$ 0.52
150	Ratchet <=25,4mm	M8 bolts installation	$ 1.00		2			$ 2.00
160	Reaction tool <=25,4mm	M8 nuts blocking	$ 0.25		2			$ 0.50
							Sub Total	**$ 14.19**

ItemOrder	Fastener	Use	UnitCost	Size1	Unit1	Size2	Unit2	Quantity	Sub Total
10	Bolt, Grade 8.8 (SAE 5)	Security headless bolts for double inserts	0.01	3	mm	5	mm	4	$ 0.04
20	Bolt, Grade 8.8 (SAE 5)	Security headless bolts for simple inserts	0.01	4	mm	4	mm	8	$ 0.08
30	Bolt, Grade 8.8 (SAE 5)	A arms fixing bolts	0.16	8	mm	40	mm	4	$ 0.64
40	Nut, Grade 8.8 (SAE 5)	A arms fixing nuts	0.04	8	mm			4	$ 0.16
50	Washer, Grade 8.8 (SAE 5)	A arms fixing washers	0.01	8	mm			8	$ 0.08
								Sub Total	**$ 1.00**

ItemOrder	Tooling	Use	UnitCost	Unit	Quantity	PVF	FractionIncluded	Sub Total
10	Welds - Welding Fixture	Welding processes	$ 500.00	point	56	3000	1	$ 9.33
							Sub Total	**$ 9.33**

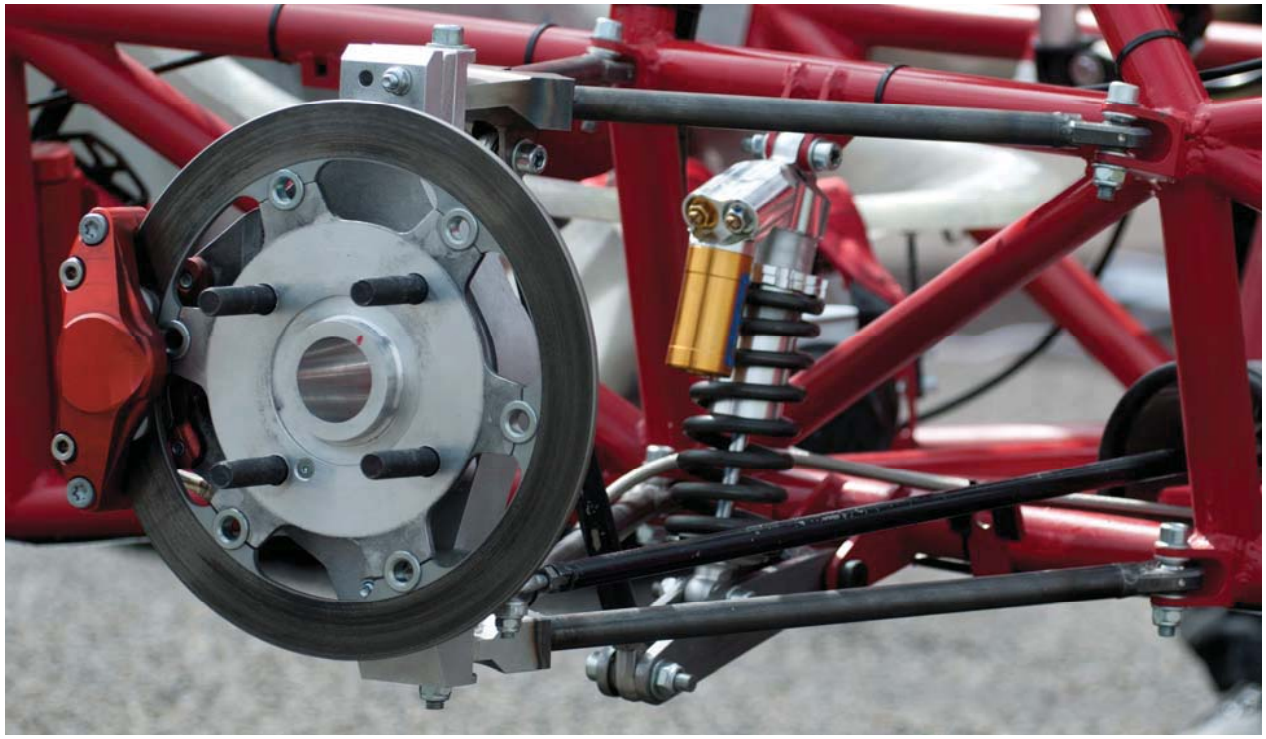

University	Ecole Centrale de Lyon			**Car #**	81	**Part Cost**	$ 8.70
System	Suspension	**FileLink1**				**Qty**	4
Assembly	Lower Front A-Arms	**FileLink2**		**FileLink1**			
Part	Lower Front A arm mounts	**FileLink3**		**FileLink2**		**Extended Cost**	$ 34.78
P/N Base	01001			**FileLink3**			
Suffix	AA						
Details	The two left and two right mounts are symetrical and have therefore the same manufacturing procedure						

ItemOrder	Material	Use	UnitCost	Size1	Unit1	Size2	Unit2	Area Name	Area	Length	Density	Quantity	Sub Total
10	Steel, Mild	Material for part	$ 2.25	0.030	m	0.041	m	Rectangular 30 mmx 41 mm	1.23E-03	0.028	7,860.00	1	$ 0.61
												Sub Total	**$ 0.61**

ItemOrder	Process	Use	UnitCost	Unit	Quantity	Multiplier	Mult. Val.	Sub Total
10	Machining Setup, Install and remove		$ 1.30		1			$ 1.30
20	Machining	Main shape contouring	$ 0.04	cm^3	12.5	Material - Steel	3	$ 1.50
30	Machining Setup Change		$ 0.65	unit	1			$ 0.65
40	Drilled holes < 25.4 mm dia.	A-arm fixing hole drilling	$ 0.35	hole	1	Hole length >4D	1.5	$ 0.53
50	Machining Setup, Install and remove		$ 1.30		1			$ 1.30
60	Machining	Central groove machinig	$ 0.04	cm^3	9.3	Material - Steel	3	$ 1.12
70	Machining Setup, Install and remove		$ 1.30		1			$ 1.30
80	Machining	Angle machining	$ 0.04	cm^3	3.3	Material - Steel	3	$ 0.40
							Sub Total	**$ 8.09**

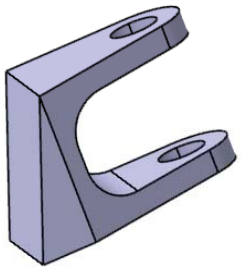

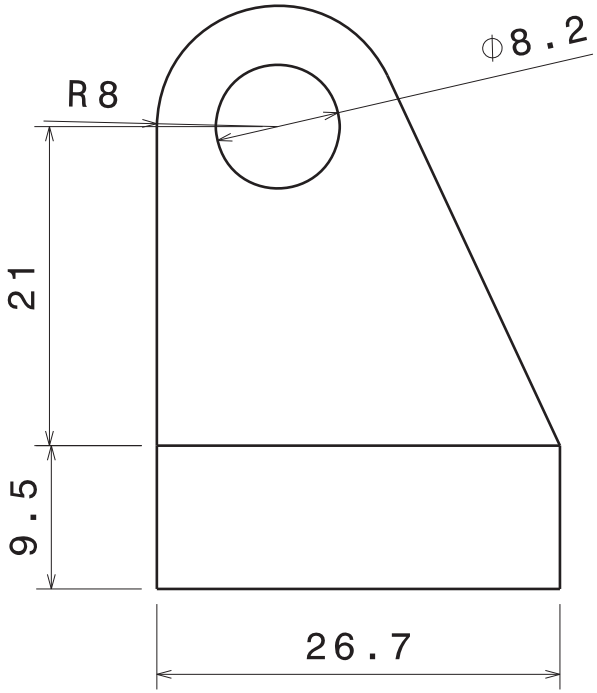

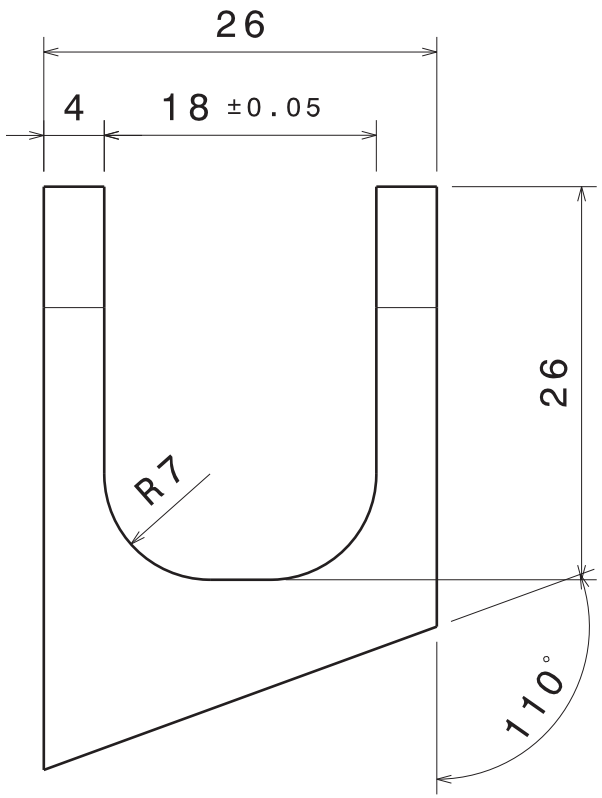

Tolérances générales ISO 2768 - mK

Taille A4		Ecurie Piston Sport Auto
Dessiné par Thomas Derouin	Date 14/01/2014	Désignation: Chape triangle av inf
Coordonnées 06 50 61 35 55 thomas.derouin@ecl2015.ec-lyon.fr		Quantité 2+2 / Matériau Acier S235 / Version 1.0
Date de livraison souhaitée 28/01/2014		Echelle 2:1 / Numéro du plan 14B062 / Feuille 1/1

University	Ecole Centrale de Lyon			**Car #**	81	**Part Cost**	$ 3.15
System	Suspension	**FileLink1**				**Qty**	4
Assembly	Lower Front A-Arms	**FileLink2**		**FileLink1**			
Part	Simple insert	**FileLink3**		**FileLink2**		**Extended Cost**	$ 12.61
P/N Base	01002			**FileLink3**			
Suffix	AA						
Details							

ItemOrder	Material	Use	UnitCost	Size1	Unit1	Size2	Unit2	Area Name	Area	Length	Density	Quantity	Sub Total
10	Steel, mild	Material for part	$ 2.25	0.017	m			Round 17 mm Diameter	2.27E-04	0.027	7,860.00	1	$ 0.11
												Sub Total	**$ 0.11**

ItemOrder	Process	Use	UnitCost	Unit	Quantity	Multiplier	Mult. Val.	Sub Total
10	Machining Setup, Install and remove		$ 1.30		1			$ 1.30
20	Machining	Main shape contouring	$ 0.04	cm^3	2.7	Material - Steel	3	$ 0.32
30	Machining Setup, Install and remove		$ 1.30		1			$ 1.30
40	Machining	Groove machining	$ 0.04	cm^3	1	Material - Steel	3	$ 0.12
							Sub Total	**$ 3.04**

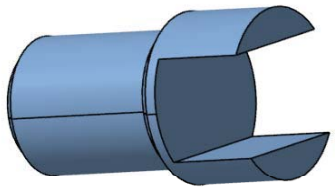

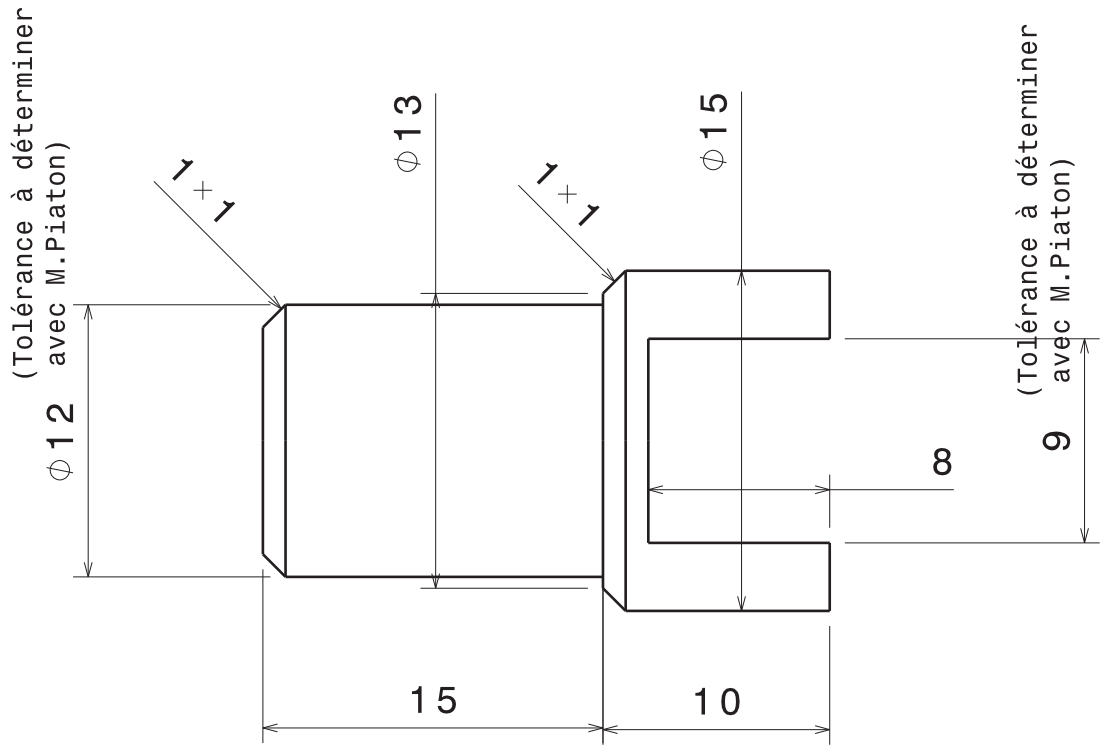

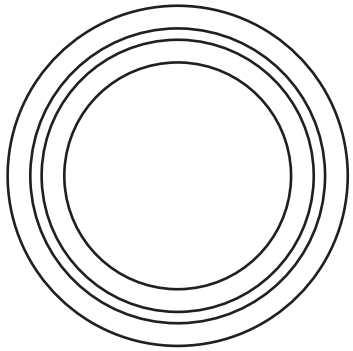

Tolérances générales ISO 2768 - mK

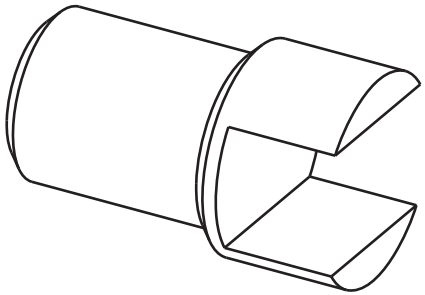

Taille A4		Ecurie Piston Sport Auto
Dessiné par Thomas Derouin	Date 08/01/14	Désignation Insert droit tube triangle
Coordonnées 06 50 61 35 55 thomas.derouin@ecl2015.ec-lyon.fr		Quantité 20 / Matériau Acier S235 / Version 0.9
Date de livraison souhaitée 21/01/14		Echelle 3:1 / Numéro du plan 14B051 / Feuille 1/1

University	Ecole Centrale de Lyon			**Car #**	81	**Part Cost**	$ 4.39
System	Suspension	**FileLink1**				**Qty**	4
Assembly	Lower Front A-Arms	**FileLink2**		**FileLink1**			
Part	Bearing support	**FileLink3**		**FileLink2**		**Extended Cost**	$ 17.56
P/N Base	01003			**FileLink3**			
Suffix	AA						
Details							

ItemOrder	Material	Use	UnitCost	Size1	Unit1	Size2	Unit2	Area Name	Area	Length	Density	Quantity	Sub Total
10	Steel, mild	Material for part	$ 2.25	0.041	m	0.032	m	Rectangular 41mm x 32 mm	1.31E-03	0.011	7,860.00	1	$ 0.26
												Sub Total	**$ 0.26**

ItemOrder	Process	Use	UnitCost	Unit	Quantity	Multiplier	Mult. Val.	Sub Total
10	Machining Setup, Install and remove		$ 1.30		1			$ 1.30
20	Machining	Main shape contouring	$ 0.04	cm^3	2.8	Material - Steel	3	$ 0.34
30	Machining	Bearing bore machining	$ 0.04	cm^3	3.5	Material - Steel	3	$ 0.42
40	Machining Setup, Install and remove		$ 1.30		1			$ 1.30
50	Drilled holes < 25.4 mm dia.		$ 0.35		2			$ 0.70
60	Threading, Internal (machining)		$ 0.10	cm	0.8			$ 0.08
							Sub Total	**$ 4.14**

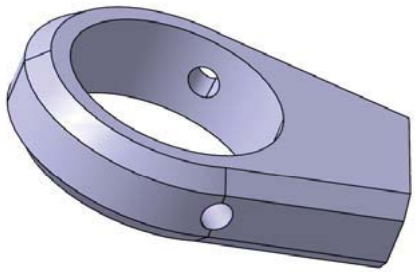

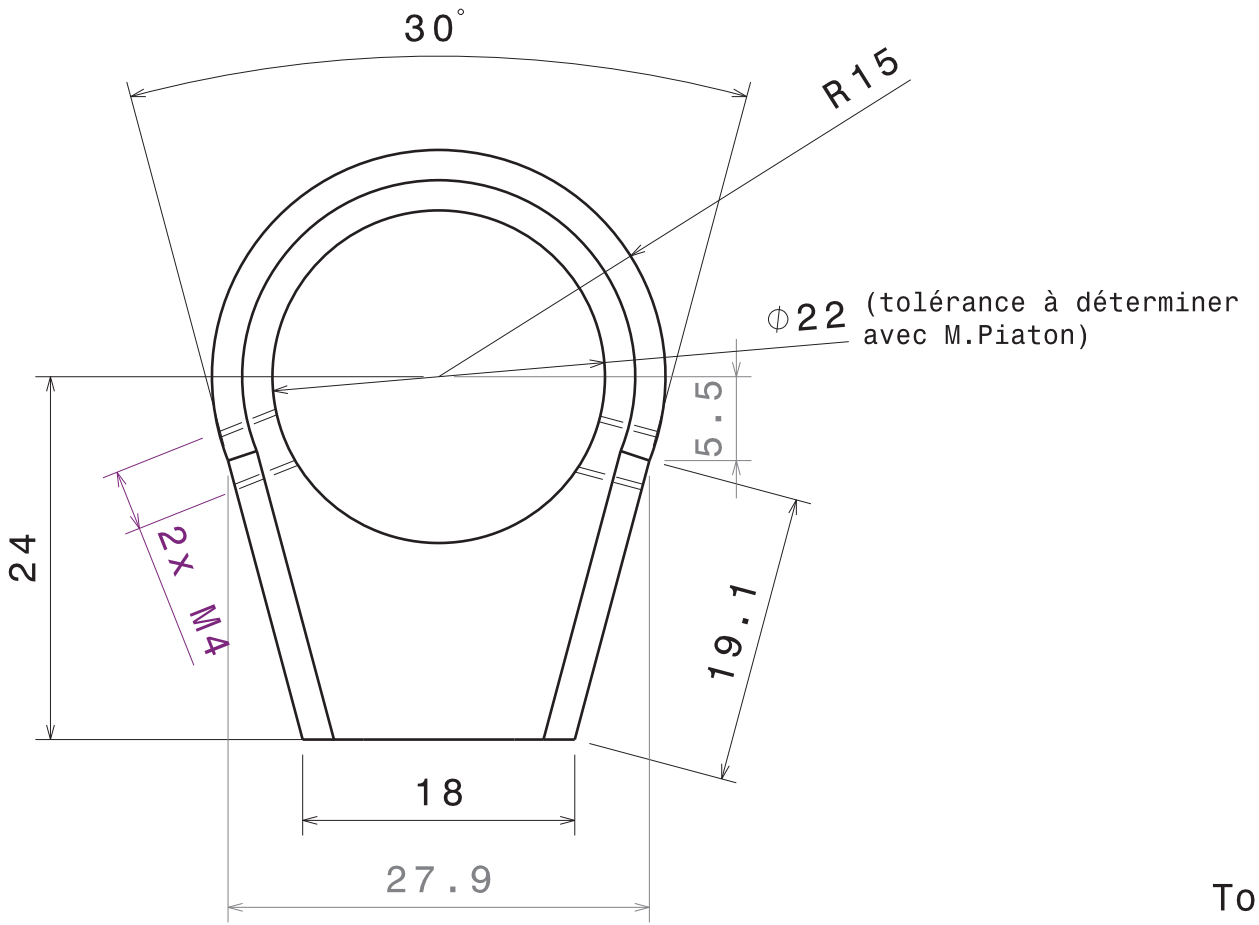

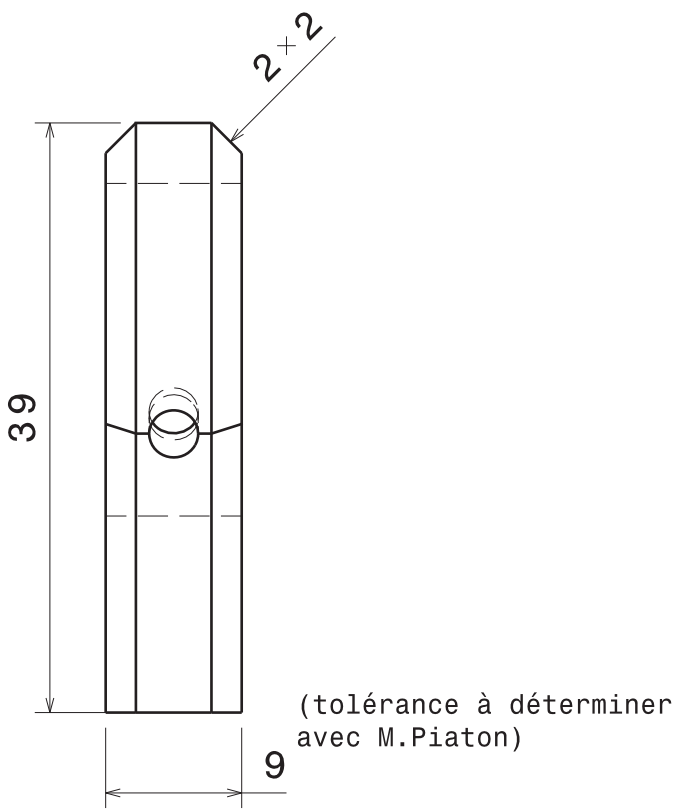

Tolérances générales ISO 2768 - mK

Taille A4		Ecurie Piston Sport Auto
Dessiné par Thomas Derouin	Date 08/01/14	Désignation: Support rotule
Coordonnées 06 50 61 35 55 thomas.derouin@ecl2015.ec-lyon.fr		Quantité 20 / Matériau Acier S235 / Version 0.9
Date de livraison souhaitée 21/01/14		Echelle 2:1 / Numéro du plan 14B018 / Feuille 1/1

University	Ecole Centrale de Lyon			**Car #**	81	**Part Cost**	$ 15.85
System	Suspension	**FileLink1**				**Qty**	2
Assembly	Lower Front A-Arms	**FileLink2**		**FileLink1**			
Part	Lower front double insert	**FileLink3**		**FileLink2**		**Extended Cost**	$ 31.70
P/N Base	01004			**FileLink3**			
Suffix	AA						
Details							

ItemOrder	Material	Use	UnitCost	Size1	Unit1	Size2	Unit2	Area Name	Area	Length	Density	Quantity	Sub Total
10	Steel,mild	Material for part	$ 2.25	0.063	m	0.062	m	Rectangular 63mmx62mm	3.91E-03	0.024	7,860.00	1	$ 1.66
												Sub Total	**$ 1.66**

ItemOrder	Process	Use	UnitCost	Unit	Quantity	Multiplier	Mult. Val.	Sub Total
10	Machining Setup, Install and remove		$ 1.30		1			$ 1.30
20	Machining	Main shape contouring	$ 0.04	cm^3	36.3	Material - Steel	3	$ 4.36
30	Machining Setup, Change		$ 0.65		1			$ 0.65
40	Machining	Main hole machining	$ 0.04	cm^3	3.5	Material - Steel	3	$ 0.42
50	Machining Setup, Install and remove		$ 1.30		1			$ 1.30
60	Machining	bottom side machining	$ 0.04	cm^3	5.2	Material - Steel	3	$ 0.62
70	Machining Setup, Install and remove		$ 1.30		1			$ 1.30
80	Machining	First tube hole machining	$ 0.04	cm^3	3.5	Material - Steel	3	$ 0.42
90	Machining Setup, Install and remove		$ 1.30		1			$ 1.30
100	Machining	Second tube hole machining	$ 0.04	cm^3	3.5	Material - Steel	3	$ 0.42
110	Machining Setup, Install and remove		$ 1.30		1			$ 1.30
120	Drilled holes < 25.4 mm dia.	M3 holes drilling	$ 0.35	hole	2			$ 0.70
130	Threading, Internal (machining)		$ 0.10	cm	1			$ 0.10
							Sub Total	**$ 14.19**

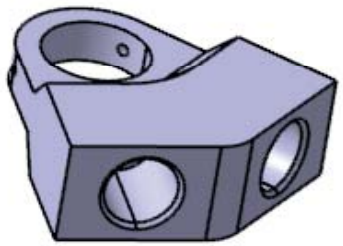

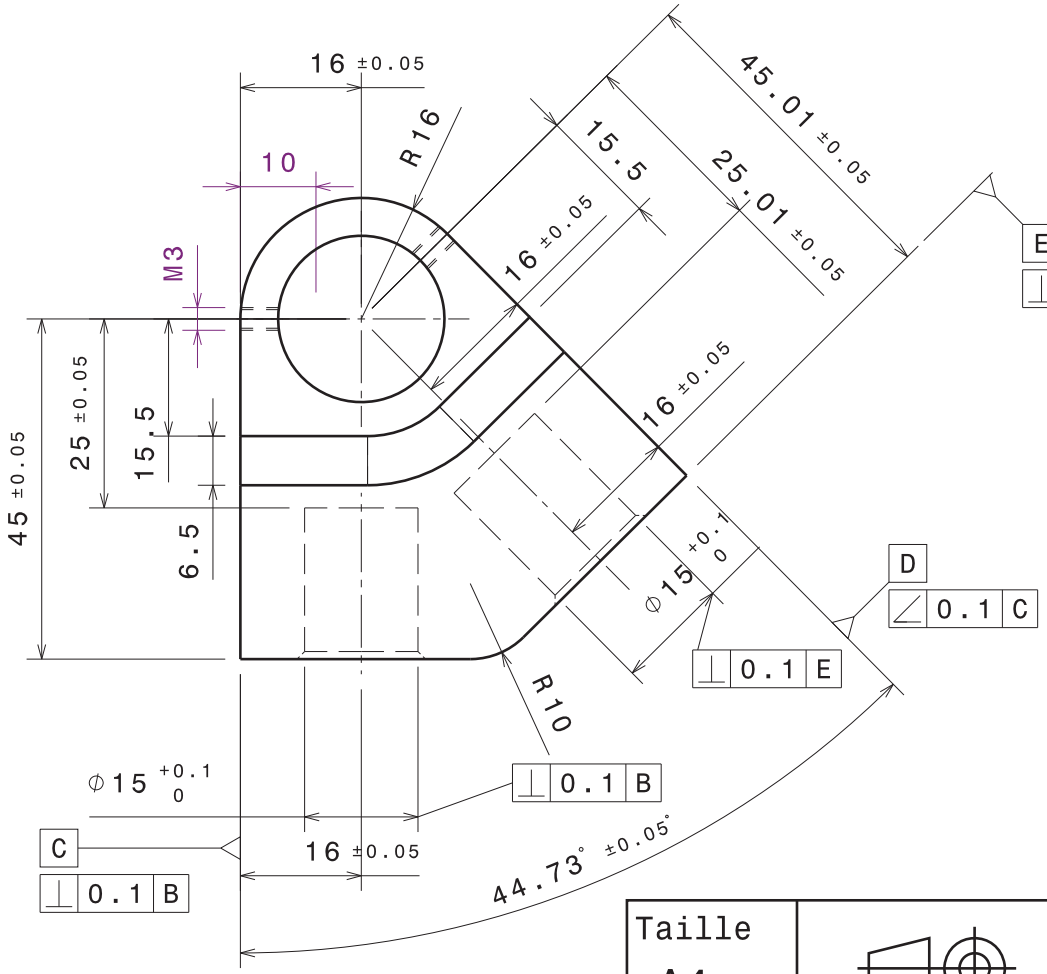

Vue de dessus
Echelle : 1:1

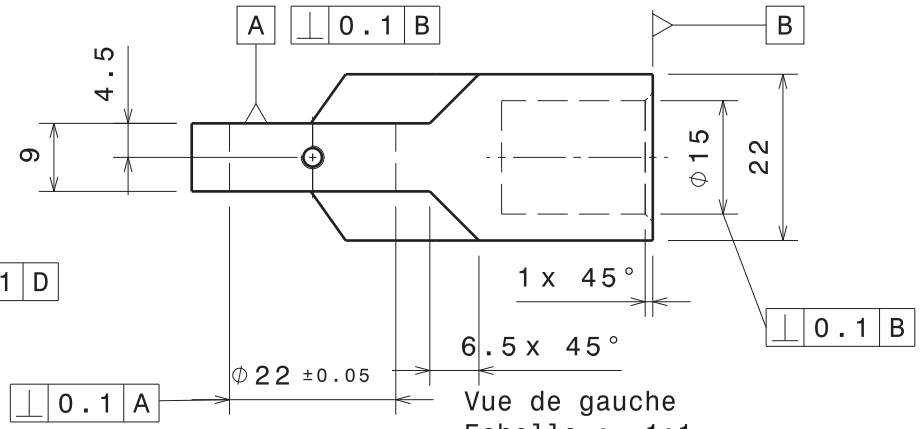

Vue de gauche
Echelle : 1:1

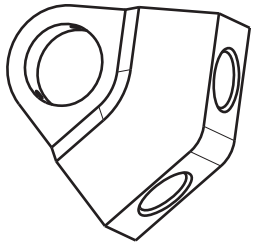

Vue isométrique
Echelle : 1:2

Tolérances sur les alésages de 22 et 15 à discuter

Tolérances générales ISO 2768-mK

Casser les angles vifs

Taille A4		Ecurie Piston Sport Auto	
Dessiné par Clément BOURQUARD	Date 20/11/2013	Désignation Insert triangle avant inf	
Coordonnées 06 33 03 95 75 clement.bourquard@ecl2015.ec-lyon.fr		Quantité 2	Matériau Acier S235	Version v1.0
Vérifié par	Date	Echelle 1:1	Numéro du plan 14B020	Feuille 1/1

University	Ecole Centrale de Lyon			**Car #**	81	**Part Cost**	$ 1.33
System	Suspension	**FileLink1**				**Qty**	8
Assembly	Lower Front A-Arms	**FileLink2**		**FileLink1**			
Part	Spacer	**FileLink3**		**FileLink2**		**Extended Cost**	$ 10.68
P/N Base	01005			**FileLink3**			
Suffix	AA						
Details							

ItemOrder	Material	Use	UnitCost	Size1	Unit1	Size2	Unit2	Area Name	Area	Length	Density	Quantity	Sub Total
10	Aluminum, Normal	Material for part	$ 4.20	0.018	m			Cylindrical diameter 18 mm	2.54E-04	0.005	2,710.00	1	$ 0.01
												Sub Total	**$ 0.01**

ItemOrder	Process	Use	UnitCost	Unit	Quantity	Multiplier	Mult. Val.	Sub Total
10	Machining Setup, Install and remove		$ 1.30		1			$ 1.30
20	Machining		$ 0.04	cm^3	0.5	Material - Aluminium	1	$ 0.02
							Sub Total	**$ 1.32**

University	Ecole Centrale de Lyon	**Car #**	81	**Asm Cost**	$ 121.73
System	Suspension			**Qty**	2
Assembly	Upper Front A-Arms	**FileLink1**			
P/N Base	A0002	**FileLink2**		**Extended Cost**	$ 243.45
Suffix	AA	**FileLink3**			
Details	Steel A-Arms				

ItemOrder	Part	Part Cost	Quantity	Sub Total
10	Upper Front A arm mounts	$ 9.09	2	$ 18.19
20	Simple insert	$ 3.15	2	$ 6.30
30	Bearing support	$ 4.39	2	$ 8.78
40	Lower front double insert	$ 35.86	1	$ 35.86
50	Spacer	$ 1.33	4	$ 5.34
			Sub Total	**$ 74.47**

ItemOrder	Material	Use	UnitCost	Size1	Unit1	Size2	Unit2	Area Name	Area	Length	Density	Quantity	Sub Total
10	Steel, alloy	Upper steel tube 1	$ 2.25	0.015	m	0.013	m	Round 15mm x 1mm	4.40E-05	0.31	7,860.00	1	$ 0.24
20	Steel, alloy	Upper steel tube 2	$ 2.25	0.015	m	0.013	m	Round 15mm x 1mm	4.40E-05	0.296	7,860.00	1	$ 0.23
30	Bearing,spherical	Link to uprights	$ 6.92	8	mm							3	$ 20.76
40	Paint	Mounts and A-arms painting	$ 10.00	0.135	m^2							0.15	$ 1.50
50	Adhesive	Glue for bearings in inserts - cost included in process	$ -										$ -
												Sub Total	**$ 22.73**

ItemOrder	Process	Use	UnitCost	Unit	Quantity	Multiplier	Mult. Val.	Sub Total
10	Weld	Steel mounts welding	0.15	cm	22			$ 3.30
20	Aerosol apply	Steel mounts painting	$ 5.25	m^2	0.015			$ 0.08
30	Weld	Bearing supports welding on simple inserts	$ 0.15	cm	3			$ 0.45
40	Tube, cut	Upper steel tube 1	$ 0.15	cm	1.5			$ 0.23
50	Tube, cut	Upper steel tube 2	$ 0.15	cm	1.5			$ 0.23
60	Weld	Steel tubes welding on simple inserts	$ 0.15	cm	9			$ 1.35
70	Weld	Steel tubes welding on double inserts	$ 0.15	cm	5			$ 0.75
80	Brush apply	Glue applying on inserts bores	$ 0.02	cm^2	20			$ 0.40
90	Assemble, 1kg, Interference	Bearings in inserts bores installation	$ 0.19		3			$ 0.57
100	Ratchet <=6,35mm	M3 headless bolts installation	$ 0.50		2			$ 1.00
110	Ratchet <=6,35mm	M4 headless bolts installation	$ 0.50		4			$ 2.00
120	Aerosol apply	A-arms painting	$ 5.25	m^2	0.12			$ 0.63
130	Assemble, 3kg, Loose	A arms positioning on steel mounts	$ 0.19		1			$ 0.19
140	Assemble, 1kg, Line on line	Spacers installation	$ 0.13		4			$ 0.52
150	Ratchet <=25,4mm	M8 bolts installation	$ 1.00		2			$ 2.00
160	Reaction tool <=25,4mm	M8 nuts blocking	$ 0.25		2			$ 0.50
							Sub Total	**$ 14.19**

ItemOrder	Fastener	Use	UnitCost	Size1	Unit1	Size2	Unit2	Quantity	Sub Total
10	Bolt, Grade 8.8 (SAE 5)	Security headless bolts for double inserts	0.01	3	mm	5	mm	4	$ 0.04
20	Bolt, Grade 8.8 (SAE 5)	Security headless bolts for simple inserts	0.01	4	mm	4	mm	8	$ 0.08
30	Bolt, Grade 8.8 (SAE 5)	A arms fixing bolts	0.16	8	mm	40	mm	4	$ 0.64
40	Nut, Grade 8.8 (SAE 5)	A arms fixing nuts	0.04	8	mm			4	$ 0.16
50	Washer, Grade 8.8 (SAE 5)	A arms fixing washers	0.01	8	mm			8	$ 0.08
								Sub Total	**$ 1.00**

ItemOrder	Tooling	Use	UnitCost	Unit	Quantity	PVF	FractionIncluded	Sub Total
10	Welds - Welding Fixture	Welding processes	$ 500.00	point	56	3000	1	$ 9.33
							Sub Total	**$ 9.33**

University	Ecole Centrale de Lyon			**Car #**	81	**Part Cost**	$ 9.09
System	Suspension	**FileLink1**				**Qty**	4
Assembly	Upper Front A-Arms	**FileLink2**		**FileLink1**			
Part	Upper Front A-Arms	**FileLink3**		**FileLink2**		**Extended Cost**	$ 36.38
P/N Base	02001			**FileLink3**			
Suffix	AA						
Details	The two left and two right mounts are symetrical and have therefore the same manufacturing procedure						

ItemOrder	Material	Use	UnitCost	Size1	Unit1	Size2	Unit2	Area Name	Area	Length	Density	Quantity	Sub Total
10	Steel, Mild	Material for part	$ 2.25	0.030	m	0.046	m	Rectangular 30 mmx 46 mm	0.00138	0.028	7,860.00	1	$ 0.68
												Sub Total	**$ 0.68**

ItemOrder	Process	Use	UnitCost	Unit	Quantity	Multiplier	Mult. Val.	Sub Total
10	Machining Setup, Install and remove		$ 1.30		1			$ 1.30
20	Machining	Main shape contouring	$ 0.04	cm^3	13.6	Material - Steel	3	$ 1.63
30	Machining Setup Change		$ 0.65	unit	1			$ 0.65
40	Drilled holes < 25.4 mm dia.		$ 0.35	hole	1	Hole length >4D	1.5	$ 0.53
50	Machining Setup, Install and remove		$ 1.30		1			$ 1.30
60	Machining	Central groove machinig	$ 0.04	cm^3	9.3	Material - Steel	3	$ 1.12
70	Machining Setup, Install and remove		$ 1.30		1			$ 1.30
80	Machining	Angle machining	$ 0.04	cm^3	4.9	Material - Steel	3	$ 0.59
							Sub Total	**$ 8.41**

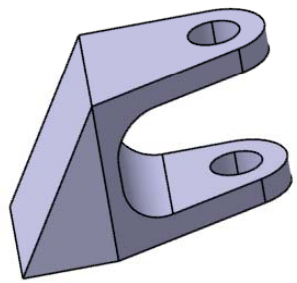

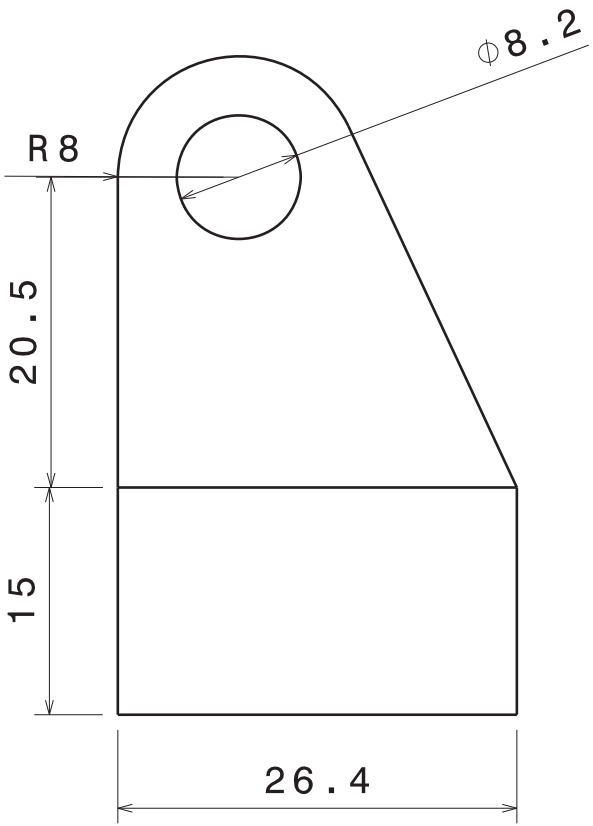

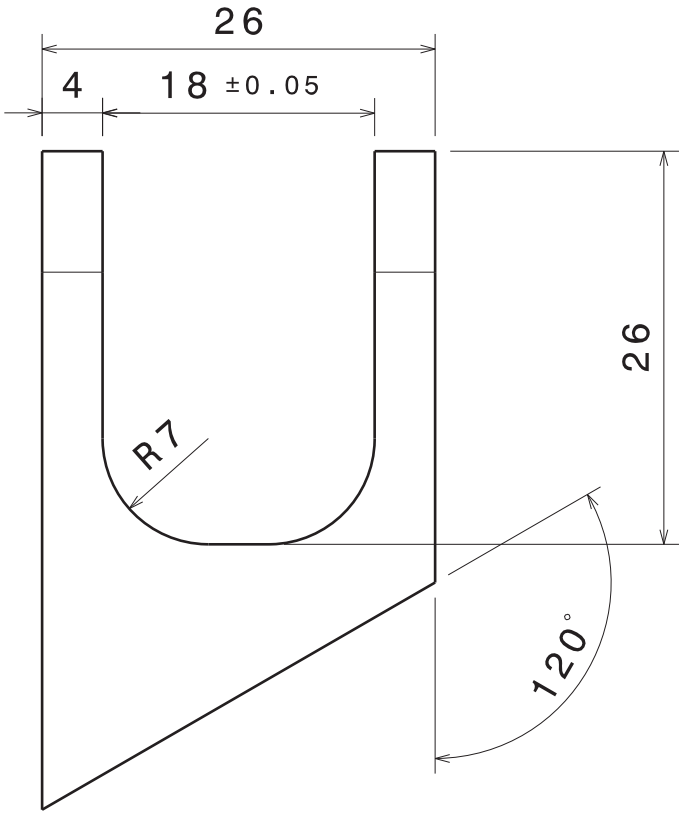

Tolérances générales ISO 2768 - mK

Taille A4		Ecurie Piston Sport Auto
Dessiné par Thomas Derouin	Date 14/01/2014	Désignation: Chape triangle av sup
Coordonnées 06 50 61 35 55 thomas.derouin@ecl2015.ec-lyon.fr		Quantité 2 + 2 / Matériau Acier S235 / Version 1.0
Date de livraison souhaitée 28/01/2014		Echelle 2:1 / Numéro du plan 14B061 / Feuille 1/1

University	Ecole Centrale de Lyon			**Car #**	81	**Part Cost**	$ 3.15
System	Suspension	**FileLink1**				**Qty**	4
Assembly	Upper Front A-Arms	**FileLink2**		**FileLink1**			
Part	Simple insert	**FileLink3**		**FileLink2**		**Extended Cost**	$ 12.61
P/N Base	02002			**FileLink3**			
Suffix	AA						
Details							

ItemOrder	Material	Use	UnitCost	Size1	Unit1	Size2	Unit2	Area Name	Area	Length	Density	Quantity	Sub Total
10	Steel, mild	Material for part	$ 2.25	0.017	m			Round 17 mm Diameter	2.27E-04	0.027	7,860.00	1	$ 0.11
												Sub Total	**$ 0.11**

ItemOrder	Process	Use	UnitCost	Unit	Quantity	Multiplier	Mult. Val.	Sub Total
10	Machining Setup, Install and remove		$ 1.30		1			$ 1.30
20	Machining	Main shape contouring	$ 0.04	cm^3	2.7	Material - Steel	3	$ 0.32
30	Machining Setup, Install and remove		$ 1.30		1			$ 1.30
40	Machining		$ 0.04	cm^3	1	Material - Steel	3	$ 0.12
							Sub Total	**$ 3.04**

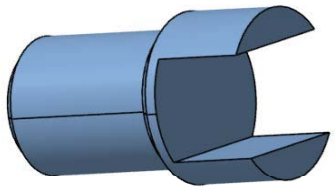

University	Ecole Centrale de Lyon			**Car #**	81	**Part Cost**	$ 4.39
System	Suspension	**FileLink1**				**Qty**	4
Assembly	Upper Front A-Arms	**FileLink2**		**FileLink1**			
Part	Bearing support	**FileLink3**		**FileLink2**		**Extended Cost**	$ 17.56
P/N Base	02003			**FileLink3**			
Suffix	AA						
Details							

ItemOrder	Material	Use	UnitCost	Size1	Unit1	Size2	Unit2	Area Name	Area	Length	Density	Quantity	Sub Total
10	Steel, mild	Material for part	$ 2.25	0.041	m	0.032	m	Rectangular 41mm x 32 mm	1.31E-03	0.011	7,860.00	1	$ 0.26
												Sub Total	**$ 0.26**

ItemOrder	Process	Use	UnitCost	Unit	Quantity	Multiplier	Mult. Val.	Sub Total
10	Machining Setup, Install and remove		$ 1.30		1			$ 1.30
20	Machining	Main shape contouring	$ 0.04	cm^3	2.8	Material - Steel	3	$ 0.34
30	Machining	Bearing bore machining	$ 0.04	cm^3	3.5	Material - Steel	3	$ 0.42
40	Machining Setup, Install and remove		$ 1.30		1			$ 1.30
50	Drilled holes < 25.4 mm dia.		$ 0.35		2			$ 0.70
60	Threading, Internal (machining)		$ 0.10	cm	0.8			$ 0.08
							Sub Total	**$ 4.14**

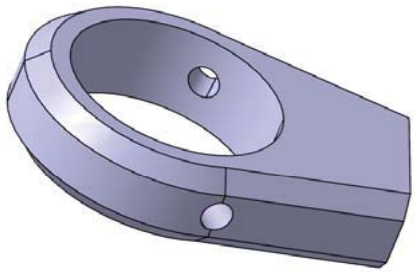

University	Ecole Centrale de Lyon			**Car #**	81	**Part Cost**	$ 35.86
System	Suspension	**FileLink1**				**Qty**	2
Assembly	Upper Front A-Arms	**FileLink2**		**FileLink1**			
Part	Upper front double insert	**FileLink3**		**FileLink2**		**Extended Cost**	$ 71.72
P/N Base	02004			**FileLink3**			
Suffix	AA						
Details							

ItemOrder	Material	Use	UnitCost	Size1	Unit1	Size2	Unit2	Area Name	Area	Length	Density	Quantity	Sub Total
10	Steel,mild	Material for part	$ 2.25	0.068	m	0.069	m	Rectangular 68mmx69mm	0.004692	0.045	7,860.00	1	$ 3.73
												Sub Total	**$ 3.73**

ItemOrder	Process	Use	UnitCost	Unit	Quantity	Multiplier	Mult. Val.	Sub Total
10	Machining Setup, Install and remove		$ 1.30		1			$ 1.30
20	Machining	Main shape contouring	$ 0.04	cm^3	141.8	Material - Steel	3	$ 17.02
30	Machining Setup, Install and remove		$ 1.30		1			$ 1.30
40	Machining		$ 0.04	cm^3	6.9	Material - Steel	3	$ 0.83
50	Machining Setup, Install and remove		$ 1.30		1			$ 1.30
60	Machining	First tube hole machining	$ 0.04	cm^3	3.5	Material - Steel	3	$ 0.42
70	Machining Setup, Install and remove		$ 1.30		1			$ 1.30
80	Machining	Second tube hole machining	$ 0.04	cm^3	3.5	Material - Steel	3	$ 0.42
90	Machining Setup, Install and remove		1.3		1			$ 1.30
100	Machining	Angle machining	0.04	cm^3	9.6	Material - Steel	3	$ 1.15
110	Machining Setup, Install and remove		$ 1.30		1			$ 1.30
120	Machining	Main hole machining	$ 0.04	cm^3	4	Material - Steel	3	$ 0.48
130	Machining Setup, Install and remove		$ 1.30		1			$ 1.30
140	Machining	Suspension rod support machining	$ 0.04	cm^3	0.7	Material - Steel	3	$ 0.08
150	Drilled holes < 25.4 mm dia.	Suspension rod support hole drilling	$ 0.35		1	Hole Length >4D	1.5	$ 0.53
160	Machining Setup, Install and remove		$ 1.30		1			$ 1.30
170	Drilled holes < 25.4 mm dia.	M3 holes drilling	$ 0.35	hole	2			$ 0.70
180	Threading, Internal (machining)		$ 0.10	cm	1			$ 0.10
							Sub Total	**$ 32.13**

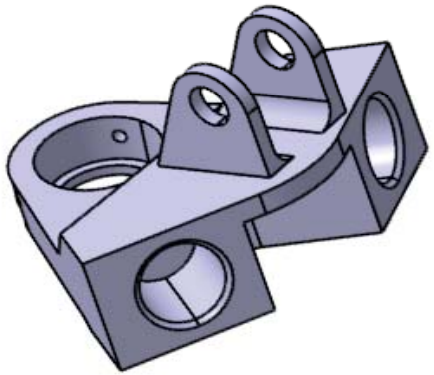

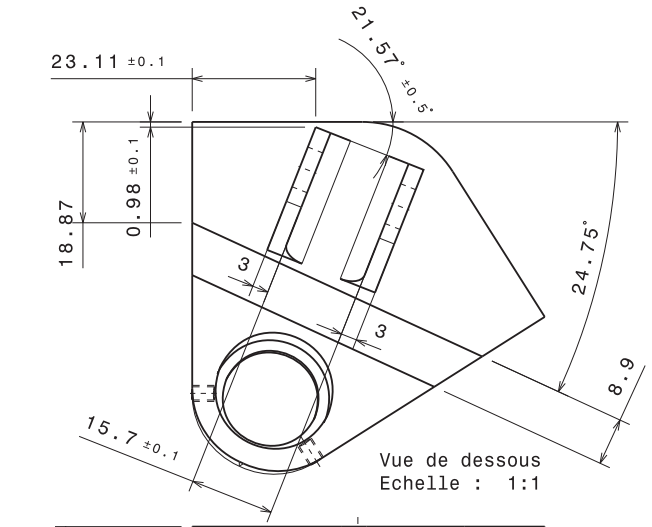

Vue de dessous
Echelle : 1:1

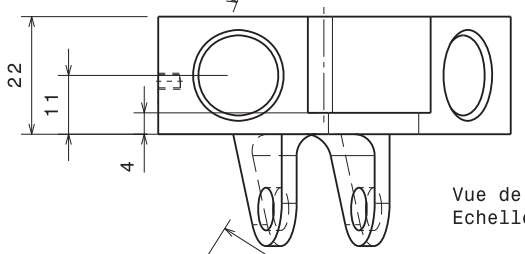

Vue de face
Echelle : 1:1

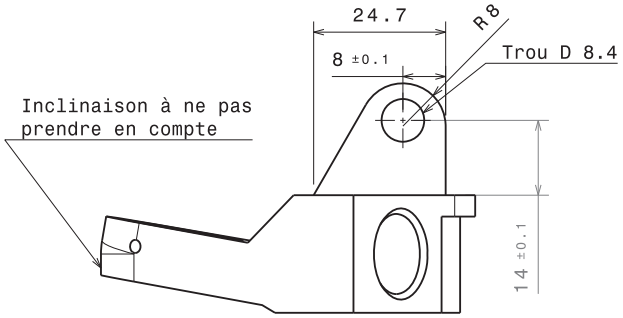

Vue de face
Echelle : 1:1

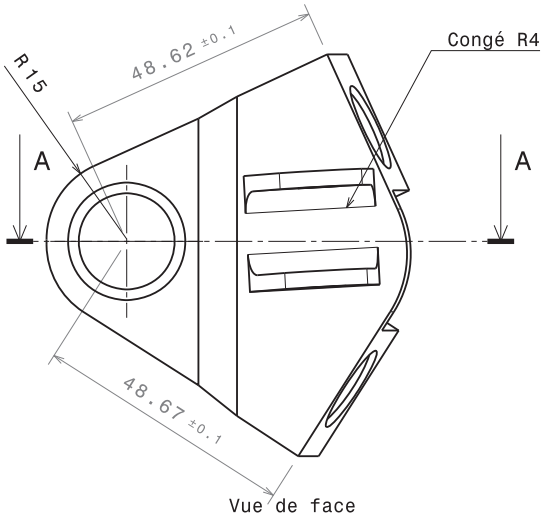

Vue de face
Echelle : 1:1

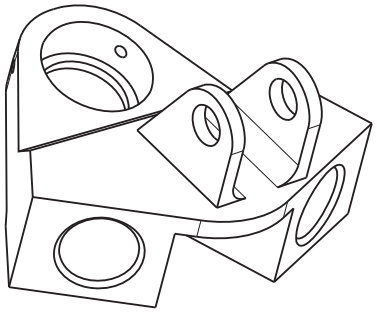

Vue isométrique
Echelle : 1:1

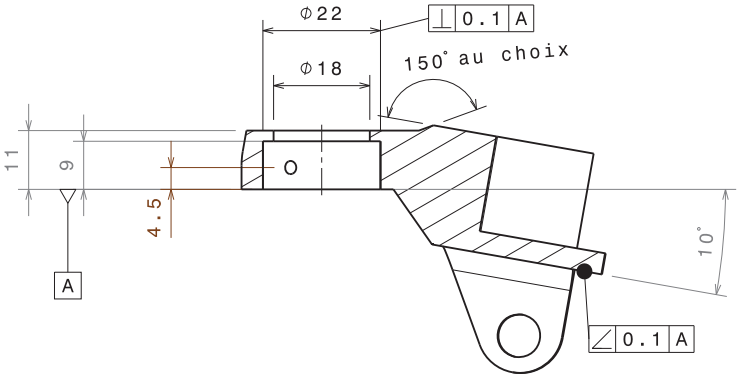

Coupe A-A
Echelle : 1:1

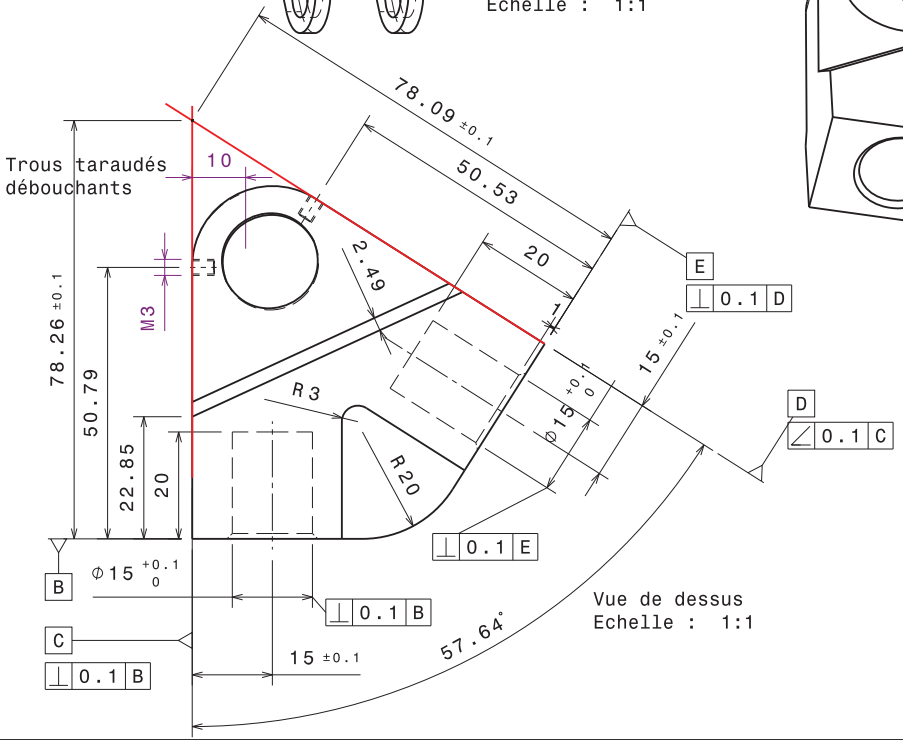

Vue de dessus
Echelle : 1:1

Tolérances sur les alésages
de 15 et 22 à discuter

Tolérances générales ISO 2768-mK

Taille A3		Ecurie Piston Sport Auto
Dessiné par Clément BOURQUARD	Date 01/12/2013	Désignation: insert triangle av sup 1
Coordonnées 06 33 03 95 75 clement.bourquard@ecl2015.ec-lyon.fr		Quantité: 1 / Matériau: Acier S235 / Version: v2.0
Date de livraison souhaitée 15/01/2014		Echelle 1:1 / Numéro du plan 14B019 / Feuille 1/1

University	Ecole Centrale de Lyon			**Car #**	81	**Part Cost**	$ 1.33
System	Suspension	**FileLink1**				**Qty**	8
Assembly	Upper Front A-Arms	**FileLink2**		**FileLink1**			
Part	Spacer	**FileLink3**		**FileLink2**		**Extended Cost**	$ 10.68
P/N Base	02005			**FileLink3**			
Suffix	AA						
Details							

ItemOrder	Material	Use	UnitCost	Size1	Unit1	Size2	Unit2	Area Name	Area	Length	Density	Quantity	Sub Total
10	Aluminum, Normal	Material for part	$ 4.20	0.018	m			Cylindrical diameter 18 mm	2.54E-04	0.005	2,710.00	1	$ 0.01
												Sub Total	**$ 0.01**

ItemOrder	Process	Use	UnitCost	Unit	Quantity	Multiplier	Mult. Val.	Sub Total
10	Machining Setup, Install and remove		$ 1.30		1			$ 1.30
20	Machining		$ 0.04	cm^3	0.5	Material - Aluminium	1	$ 0.02
							Sub Total	**$ 1.32**

University	Ecole Centrale de Lyon	**Car #**	81	**Asm Cost**	$ 98.05
System	Suspension			**Qty**	2
Assembly	Lower Rear A-Arms	**FileLink1**			
P/N Base	A0003	**FileLink2**		**Extended Cost**	$ 196.10
Suffix	AA	**FileLink3**			
Details	Steel A-Arms				

ItemOrder	Part	Part Cost	Quantity	Sub Total
10	Lower Rear A arm Front mounts	$ 8.63	1	$ 8.63
20	Lower Rear A arm Rear mounts	$ 10.56	1	$ 10.56
30	Simple insert	$ 3.15	2	$ 6.30
40	Bearing support	$ 4.39	2	$ 8.78
50	Lower rear double insert	$ 15.85	1	$ 15.85
60	Spacer	$ 1.33	4	$ 5.34
			Sub Total	**$ 55.46**

ItemOrder	Material	Use	UnitCost	Size1	Unit1	Size2	Unit2	Area Name	Area	Length	Density	Quantity	Sub Total
10	Steel, alloy	Lower steel tube 1	$ 2.25	0.015	m	0.013	m	Round 15mm x 1mm	4.40E-05	0.31	7,860.00	1	$ 0.24
20	Steel, alloy	Lower steel tube 2	$ 2.25	0.015	m	0.013	m	Round 15mm x 1mm	4.40E-05	0.296	7,860.00	1	$ 0.23
30	Bearing,spherical	Link to uprights	$ 6.92	8	mm							3	$ 20.76
40	Paint	Mounts and A-arms painting	$ 10.00	0.135	m^2							0.15	$ 1.50
50	Adhesive	Glue for bearings in inserts - cost included in process	$ -										$ -
												Sub Total	**$ 22.73**

ItemOrder	Process	Use	UnitCost	Unit	Quantity	Multiplier	Mult. Val.	Sub Total
10	Weld	Steel mounts welding	0.15	cm	22			$ 3.30
20	Aerosol apply	Steel mounts painting	$ 5.25	m^2	0.015			$ 0.08
30	Weld	Bearing supports welding on simple inserts	$ 0.15	cm	3			$ 0.45
40	Tube, cut	Lower steel tube 1	$ 0.15	cm	1.5			$ 0.23
50	Tube, cut	Lower steel tube 2	$ 0.15	cm	1.5			$ 0.23
60	Weld	Steel tubes welding on simple inserts	$ 0.15	cm	9			$ 1.35
70	Weld	Steel tubes welding on double inserts	$ 0.15	cm	5			$ 0.75
80	Brush apply	Glue applying on inserts bores	$ 0.02	cm^2	20			$ 0.40
90	Assemble, 1kg, Interference	Bearings in inserts bores installation	$ 0.19		3			$ 0.57
100	Ratchet <=6,35mm	M3 headless bolts installation	$ 0.50		2			$ 1.00
110	Ratchet <=6,35mm	M4 headless bolts installation	$ 0.50		4			$ 2.00
120	Aerosol apply	A-arms painting	$ 5.25	m^2	0.12			$ 0.63
130	Assemble, 3kg, Loose	A arms positioning on steel mounts	$ 0.19		1			$ 0.19
140	Assemble, 1kg, Line on line	Spacers installation	$ 0.13		4			$ 0.52
150	Ratchet <=25,4mm	M8 bolts installation	$ 1.00		2			$ 2.00
160	Reaction tool <=25,4mm	M8 nuts blocking	$ 0.25		2			$ 0.50
							Sub Total	**$ 14.19**

ItemOrder	Fastener	Use	UnitCost	Size1	Unit1	Size2	Unit2	Quantity	Sub Total
10	Bolt, Grade 8.8 (SAE 5)	Security headless bolts for double inserts	0.01	3	mm	5	mm	4	$ 0.04
20	Bolt, Grade 8.8 (SAE 5)	Security headless bolts for simple inserts	0.01	4	mm	4	mm	8	$ 0.08
30	Bolt, Grade 8.8 (SAE 5)	A arms fixing bolts	0.16	8	mm	40	mm	4	$ 0.64
40	Nut, Grade 8.8 (SAE 5)	A arms fixing nuts	0.04	8	mm			4	$ 0.16
50	Washer, Grade 8.8 (SAE 5)	A arms fixing washers	0.01	8	mm			8	$ 0.08
								Sub Total	**$ 1.00**

ItemOrder	Tooling	Use	UnitCost	Unit	Quantity	PVF	FractionIncluded	Sub Total
10	Welds - Welding Fixture	Welding processes	$ 500.00	point	28	3000	1	$ 4.67
							Sub Total	**$ 4.67**

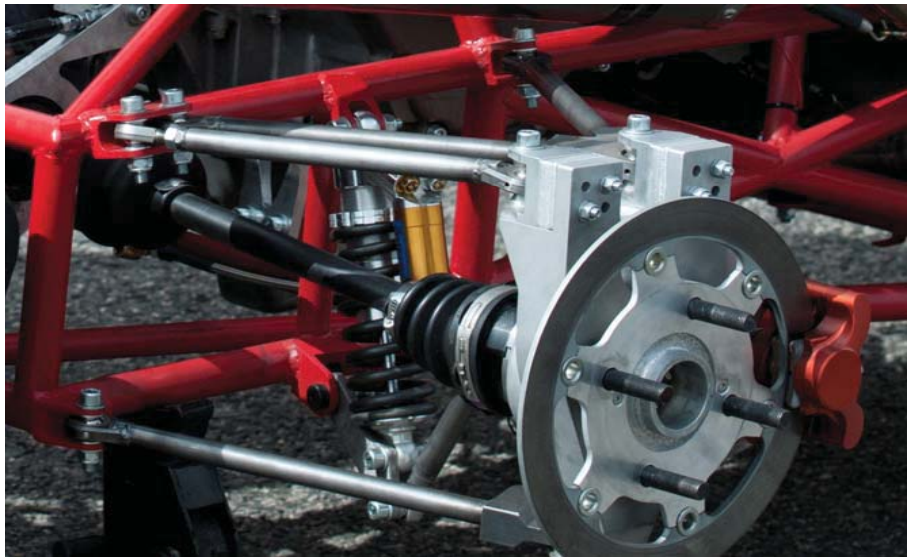

University	Ecole Centrale de Lyon			**Car #**	81	**Part Cost**	$ 8.63
System	Suspension	**FileLink1**				**Qty**	2
Assembly	Lower Rear A-Arms	**FileLink2**		**FileLink1**			
Part	Lower Rear A arm Front mounts	**FileLink3**		**FileLink2**		**Extended Cost**	$ 17.25
P/N Base	03001			**FileLink3**			
Suffix	AA						
Details	The two left and two right mounts are symetrical and have therefore the same manufacturing procedure						

ItemOrder	Material	Use	UnitCost	Size1	Unit1	Size2	Unit2	Area Name	Area	Length	Density	Quantity	Sub Total
10	Steel, Mild	Material for part	$ 2.25	0.033	m	0.036	m	Rectangular 33 mmx 36 mm	0.00119	0.028	7,860.00	1	$ 0.59
												Sub Total	**$ 0.59**

ItemOrder	Process	Use	UnitCost	Unit	Quantity	Multiplier	Mult. Val.	Sub Total
10	Machining Setup, Install and remove		$ 1.30		1			$ 1.30
20	Machining	Main shape contouring	$ 0.04	cm^3	14.2	Material - Steel	3	$ 1.70
30	Machining Setup Change		$ 0.65	unit	1			$ 0.65
40	Drilled holes < 25.4 mm dia.	A-arm fixing hole drilling	$ 0.35	hole	1	Hole length >4D	1.5	$ 0.53
50	Machining Setup, Install and remove		$ 1.30		1			$ 1.30
60	Machining	Central groove machining	$ 0.04	cm^3	9.3	Material - Steel	3	$ 1.12
70	Machining Setup, Install and remove		$ 1.30		1			$ 1.30
80	Machining	Angle machining	$ 0.04	cm^3	1.2	Material - Steel	3	$ 0.14
							Sub Total	**$ 8.04**

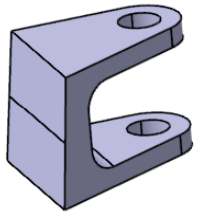

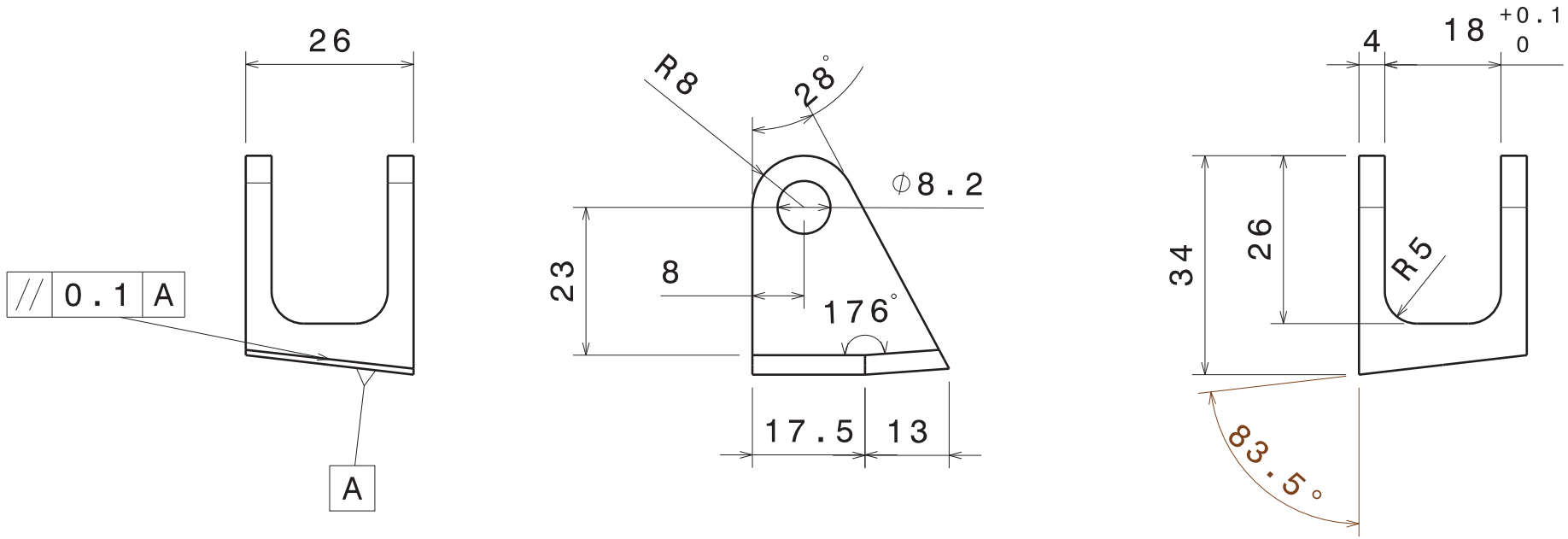

Tolérances générales ISO 2768 - mK

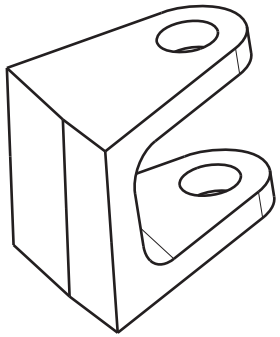

Taille A4		Ecurie Piston Sport Auto
Dessiné par Thomas Derouin	Date 15/12/2013	Désignation: Chape triangle ar inf av
Coordonnées 06 50 61 35 55 thomas.derouin@ecl2015.ec-lyon.fr		Quantité 1+1 / Matériau Acier S235 / Version 1.0
Vérifié par	Date	Echelle 1:1 / Numéro du plan 14B059 / Feuille 1/1

University	Ecole Centrale de Lyon			**Car #**	81	**Part Cost**	$ 10.56
System	Suspension	**FileLink1**				**Qty**	2
Assembly	Lower Rear A-Arms	**FileLink2**		**FileLink1**			
Part	Lower Rear A arm Rear mounts	**FileLink3**		**FileLink2**		**Extended Cost**	$ 21.13
P/N Base	03002			**FileLink3**			
Suffix	AA						
Details	The two left and two right mounts are symetrical and have therefore the same manufacturing procedure						

ItemOrder	Material	Use	UnitCost	Size1	Unit1	Size2	Unit2	Area Name	Area	Length	Density	Quantity	Sub Total
10	Steel, Mild	Material for part	$ 2.25	0.033	m	0.036	m	Rectangular 33 mmx 36 mm	0.00119	0.028	7,860.00	1	$ 0.59
												Sub Total	**$ 0.59**

ItemOrder	Process	Use	UnitCost	Unit	Quantity	Multiplier	Mult. Val.	Sub Total
10	Machining Setup, Install and remove		$ 1.30		1			$ 1.30
20	Machining	Main shape contouring	$ 0.04	cm^3	16.2		3	$ 1.94
30	Machining Setup Change		$ 0.65	unit	1			$ 0.65
40	Drilled holes < 25.4 mm dia.	A-arm fixing hole drilling	$ 0.35	hole	1	Hole length >4D	1.5	$ 0.53
50	Machining Setup, Install and remove		$ 1.30		1			$ 1.30
60	Machining	Central groove machining	$ 0.04	cm^3	10.8		3	$ 1.30
70	Machining Setup, Install and remove		$ 1.30		1			$ 1.30
80	Machining	First tube cavity	$ 0.04	cm^3	1.8		3	$ 0.22
90	Machining Setup, Install and remove		$ 1.30		1			$ 1.30
100	Machining	Second tube cavity	$ 0.04	cm^3	1.2		3	$ 0.14
							Sub Total	**$ 9.98**

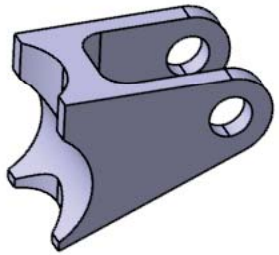

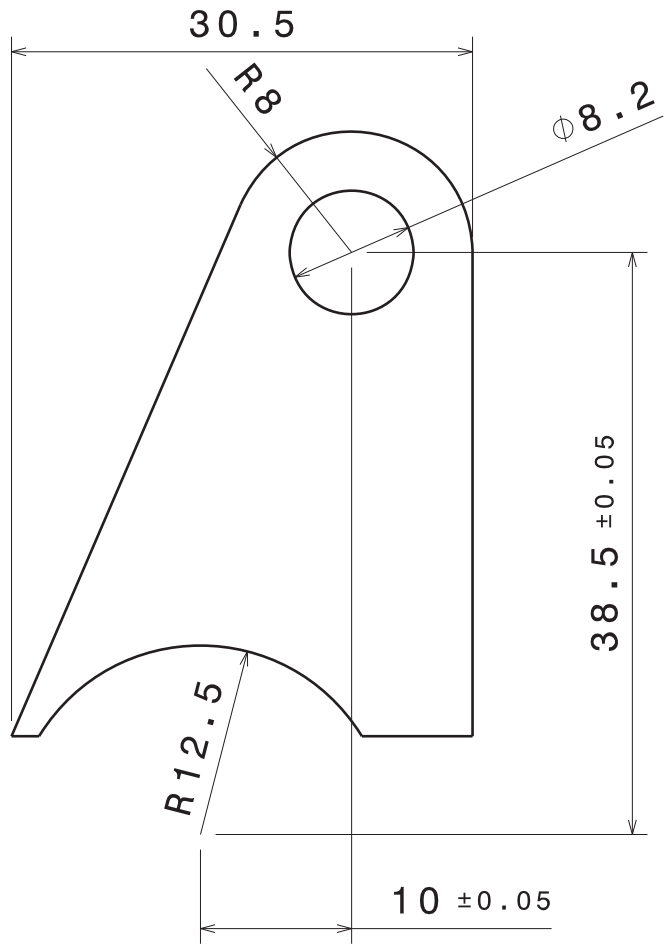

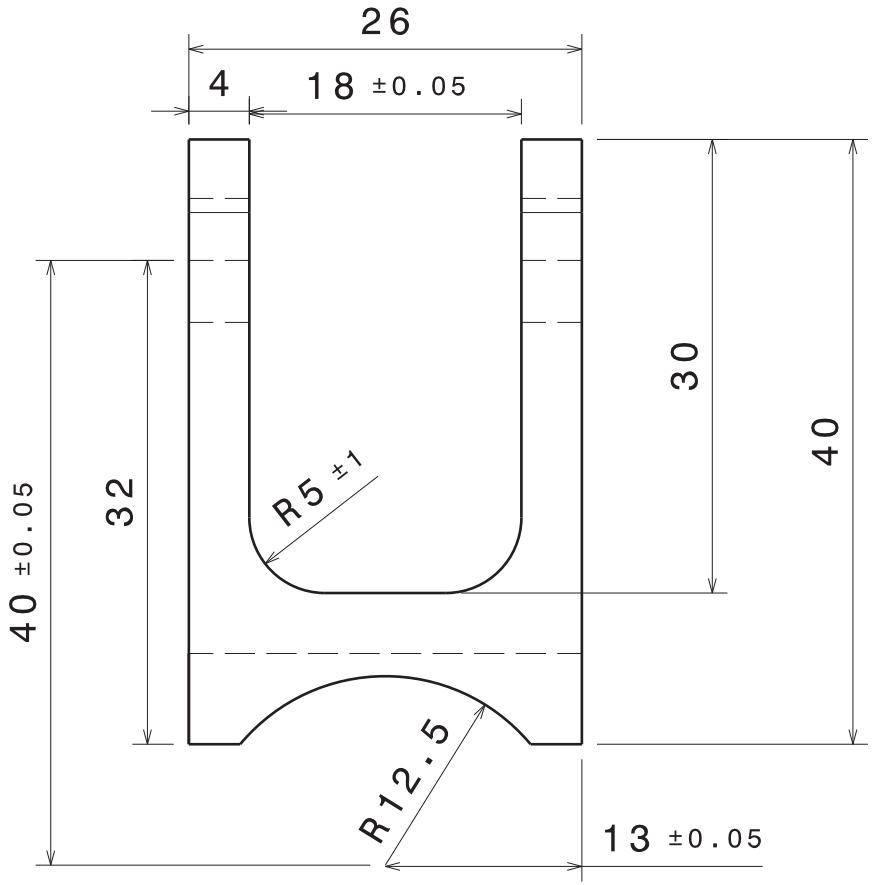

Tolérances générales ISO 2768 - mK

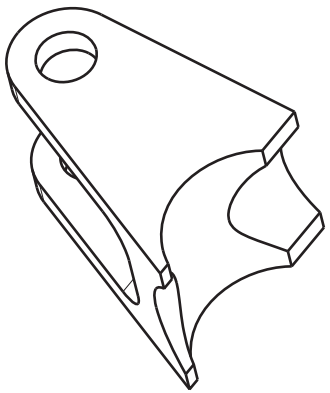

Taille A4		Ecurie Piston Sport Auto
Dessiné par Thomas Derouin	Date 24/11/2013	Désignation Chape triangle ar inf ar
Coordonnées 06 50 61 35 55 thomas.derouin@ecl2015.ec-lyon.fr		Quantité 2 / Matériau Acier S235 / Version 1.0
Vérifié par	Date	Echelle 2:1 / Numéro du plan 14B058 / Feuille 1/1

University	Ecole Centrale de Lyon			**Car #**	81	**Part Cost**	$ 3.15
System	Suspension	**FileLink1**				**Qty**	4
Assembly	Lower Rear A-Arms	**FileLink2**		**FileLink1**			
Part	Simple insert	**FileLink3**		**FileLink2**		**Extended Cost**	$ 12.61
P/N Base	03003			**FileLink3**			
Suffix	AA						
Details							

ItemOrder	Material	Use	UnitCost	Size1	Unit1	Size2	Unit2	Area Name	Area	Length	Density	Quantity	Sub Total
10	Steel, mild	Material for part	$ 2.25	0.017	m			Round 17 mm Diameter	2.27E-04	0.027	7,860.00	1	$ 0.11
												Sub Total	**$ 0.11**

ItemOrder	Process	Use	UnitCost	Unit	Quantity	Multiplier	Mult. Val.	Sub Total
10	Machining Setup, Install and remove		$ 1.30		1			$ 1.30
20	Machining	Main shape contouring	$ 0.04	cm^3	2.7	Material - Steel	3	$ 0.32
30	Machining Setup, Install and remove		$ 1.30		1			$ 1.30
40	Machining	Groove machining	$ 0.04	cm^3	1	Material - Steel	3	$ 0.12
							Sub Total	**$ 3.04**

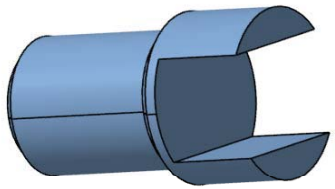

University	Ecole Centrale de Lyon			**Car #**	81	**Part Cost**	$ 4.39
System	Suspension	**FileLink1**				**Qty**	4
Assembly	Lower Rear A-Arms	**FileLink2**		**FileLink1**			
Part	Bearing support	**FileLink3**		**FileLink2**		**Extended Cost**	$ 17.56
P/N Base	03004			**FileLink3**			
Suffix	AA						
Details							

ItemOrder	Material	Use	UnitCost	Size1	Unit1	Size2	Unit2	Area Name	Area	Length	Density	Quantity	Sub Total
10	Steel, mild	Material for part	$ 2.25	0.041	m	0.032	m	Rectangular 41mm x 32 mm	1.31E-03	0.011	7,860.00	1	$ 0.26
												Sub Total	**$ 0.26**

ItemOrder	Process	Use	UnitCost	Unit	Quantity	Multiplier	Mult. Val.	Sub Total
10	Machining Setup, Install and remove		$ 1.30		1			$ 1.30
20	Machining	Main shape contouring	$ 0.04	cm^3	2.8	Material - Steel	3	$ 0.34
30	Machining	Bearing bore machining	$ 0.04	cm^3	3.5	Material - Steel	3	$ 0.42
40	Machining Setup, Install and remove		$ 1.30		1			$ 1.30
50	Drilled holes < 25.4 mm dia.		$ 0.35		2			$ 0.70
60	Threading, Internal (machining)		$ 0.10	cm	0.8			$ 0.08
							Sub Total	**$ 4.14**

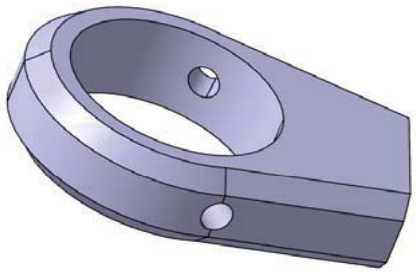

University	Ecole Centrale de Lyon			**Car #**	81	**Part Cost**	$ 15.85
System	Suspension	**FileLink1**				**Qty**	2
Assembly	Lower Rear A-Arms	**FileLink2**		**FileLink1**			
Part	Lower rear double insert	**FileLink3**		**FileLink2**		**Extended Cost**	$ 31.70
P/N Base	03005			**FileLink3**			
Suffix	AA						
Details							

ItemOrder	Material	Use	UnitCost	Size1	Unit1	Size2	Unit2	Area Name	Area	Length	Density	Quantity	Sub Total
10	Steel,mild	Material for part	$ 2.25	0.063	m	0.062	m	Rectangular 63mmx62mm	3.91E-03	0.024	7,860.00	1	$ 1.66
												Sub Total	**$ 1.66**

ItemOrder	Process	Use	UnitCost	Unit	Quantity	Multiplier	Mult. Val.	Sub Total
10	Machining Setup, Install and remove		$ 1.30		1			$ 1.30
20	Machining	Main shape contouring	$ 0.04	cm^3	36.3	Material - Steel	3	$ 4.36
30	Machining Setup, Change		$ 0.65		1			$ 0.65
40	Machining	Main hole machining	$ 0.04	cm^3	3.5	Material - Steel	3	$ 0.42
50	Machining Setup, Install and remove		$ 1.30		1			$ 1.30
60	Machining	bottom side machining	$ 0.04	cm^3	5.2	Material - Steel	3	$ 0.62
70	Machining Setup, Install and remove		$ 1.30		1			$ 1.30
80	Machining	First tube hole machining	$ 0.04	cm^3	3.5	Material - Steel	3	$ 0.42
90	Machining Setup, Install and remove		$ 1.30		1			$ 1.30
100	Machining	Second tube hole machining	$ 0.04	cm^3	3.5	Material - Steel	3	$ 0.42
110	Machining Setup, Install and remove		$ 1.30		1			$ 1.30
120	Drilled holes < 25.4 mm dia.	M3 holes drilling	$ 0.35	hole	2			$ 0.70
130	Threading, Internal (machining)		$ 0.10	cm	1			$ 0.10
							Sub Total	**$ 14.19**

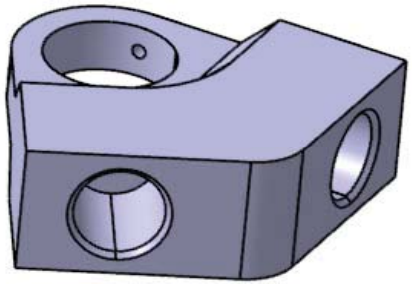

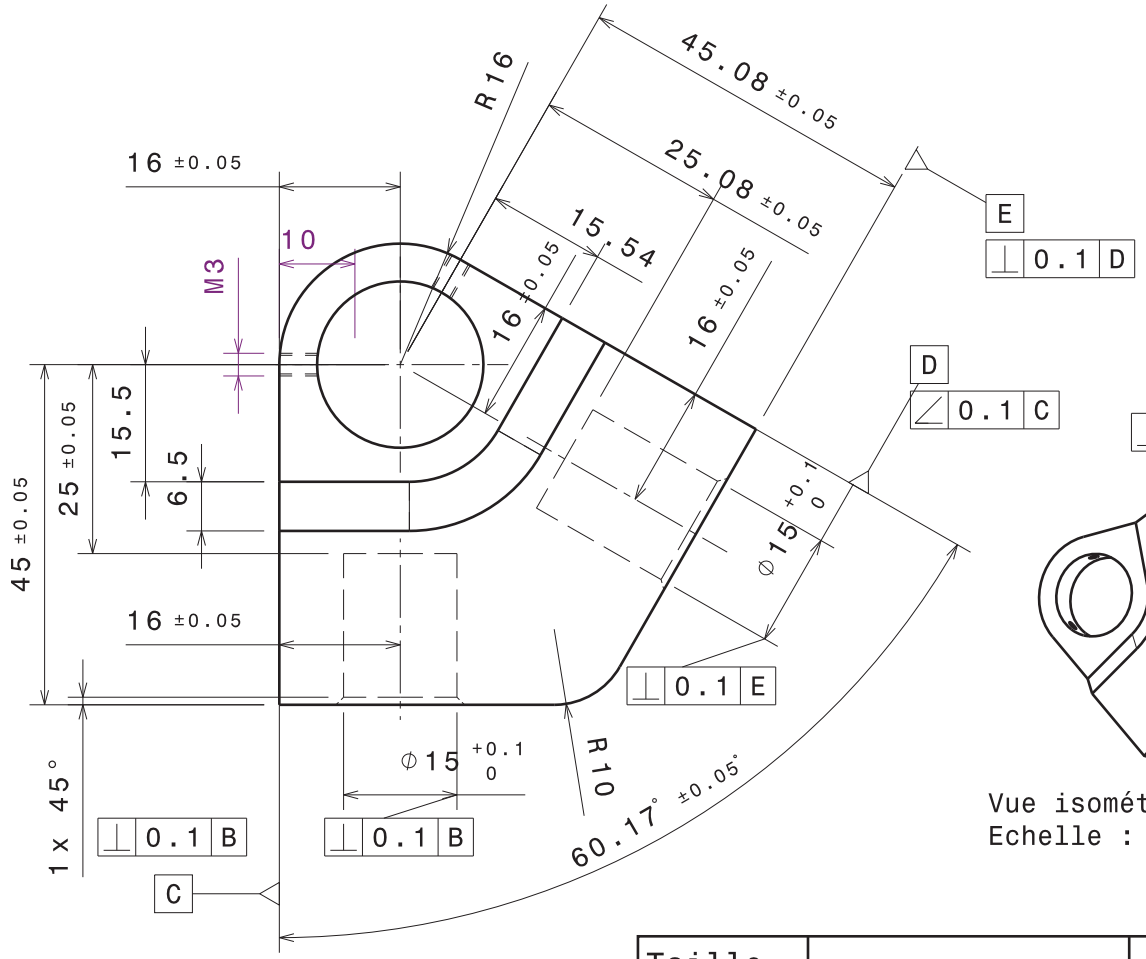

Vue de dessus
Echelle : 1:1

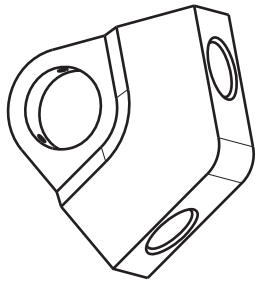

Vue isométrique
Echelle : 1:2

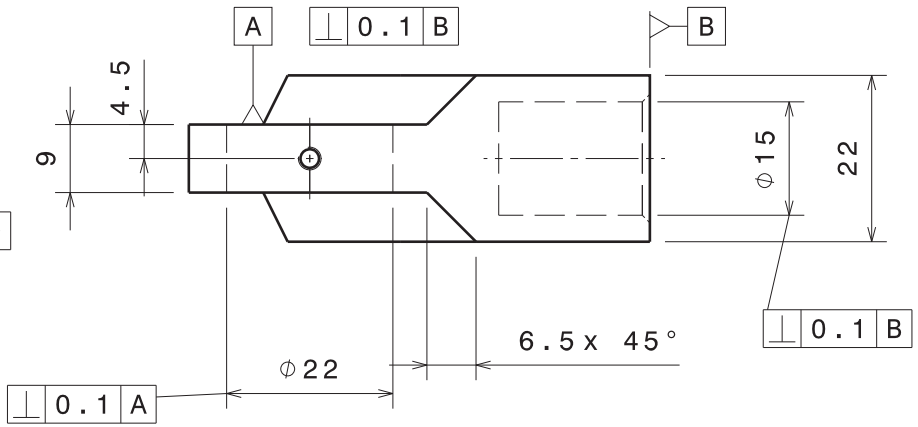

Vue de gauche
Echelle : 1:1

Tolérances sur les alésages
de 22 et 15 à discuter

Tolérances générales ISO2768-mK

Casser les angles vifs

Taille A4		Ecurie Piston Sport Auto
Dessiné par Clément BOURQUARD	Date 20/11/2013	Désignation Insert triangle arrière inf
Coordonnées 06 33 03 95 75 clement.bourquard@ecl2015.ec-lyon.fr		Quantité 2 / Matériau Acier S235 / Version v2.0
Vérifié par	Date	Echelle 1:1 / Numéro du plan 14B023 / Feuille 1/1

University	Ecole Centrale de Lyon			**Car #**	81	**Part Cost**	$ 1.33
System	Suspension	**FileLink1**				**Qty**	8
Assembly	Lower Rear A-Arms	**FileLink2**		**FileLink1**			
Part	Spacer	**FileLink3**		**FileLink2**		**Extended Cost**	$ 10.68
P/N Base	03006			**FileLink3**			
Suffix	AA						
Details							

ItemOrder	Material	Use	UnitCost	Size1	Unit1	Size2	Unit2	Area Name	Area	Length	Density	Quantity	Sub Total
10	Aluminum, Normal	Material for part	$ 4.20	0.018	m			Cylindrical diameter 18 mm	2.54E-04	0.005	2,710.00	1	$ 0.01
												Sub Total	**$ 0.01**

ItemOrder	Process	Use	UnitCost	Unit	Quantity	Multiplier	Mult. Val.	Sub Total
10	Machining Setup, Install and remove		$ 1.30		1			$ 1.30
20	Machining		$ 0.04	cm^3	0.5	Material - Aluminium	1	$ 0.02
							Sub Total	**$ 1.32**

University	Ecole Centrale de Lyon	**Car #**	81	**Asm Cost**	$ 164.85
System	Suspension			**Qty**	2
Assembly	Upper Rear A-Arms / Pullrods	**FileLink1**			
P/N Base	A0004	**FileLink2**		**Extended Cost**	$ 329.70
Suffix	AA	**FileLink3**			
Details	Steel A-Arms				

ItemOrder	Part	Part Cost	Quantity	Sub Total
10	Upper Rear A arm Front mounts	$ 8.79	1	$ 8.79
20	Upper Rear A arm Rear mounts	$ 11.14	1	$ 11.14
30	Simple insert	$ 3.15	2	$ 6.30
40	Bearing support	$ 4.39	2	$ 8.78
50	Upper rear double insert	$ 36.27	1	$ 36.27
70	Pullrod insert	$ 3.15	4	$ 12.61
80	Spacer	$ 1.33	4	$ 5.34
			Sub Total	**$ 89.24**

ItemOrder	Material	Use	UnitCost	Size1	Unit1	Size2	Unit2	Area Name	Area	Length	Density	Quantity	Sub Total
10	Steel, alloy	Lower steel tube 1	$ 2.25	0.015	m	0.013	m	Round 15mm x 1mm	4.40E-05	0.31	7,860.00	1	$ 0.24
20	Steel, alloy	Lower steel tube 2	$ 2.25	0.015	m	0.013	m	Round 15mm x 1mm	4.40E-05	0.296	7,860.00	1	$ 0.23
30	Bearing,spherical	Link to frame and uprights	$ 6.92	8	mm							4	$ 27.68
40	Rod End, Industrial	Pullrods installation on mounts	$ 7.00	8	mm							1	$ 7.00
50	Paint	Mounts and A-arms painting	$ 10.00	0.14	m^2							1	$ 10.00
60	Adhesive	Glue for bearings in inserts - cost included *in process*	$ -										$ -
												Sub Total	**$ 45.15**

ItemOrder	Process	Use	UnitCost	Unit	Quantity	Multiplier	Mult. Val.	Sub Total
10	Weld	Steel mounts welding on frame	0.15	cm	28		1	$ 4.20
20	Aerosol apply	Steel mounts painting	$ 5.25	m^2	0.014		1	$ 0.07
30	Weld	Bearing supports welding on simple inserts or pullrod inserts	$ 0.15	cm	5		1	$ 0.75
40	Tube, cut	Upper steel tubes 1 and 2	$ 0.15	cm	1.5	repeat 2	2	$ 0.45
50	Tube, cut	Upper steel tube 3 (pullrod)	$ 0.15	cm	1.5			$ 0.23
60	Weld	Steel tubes welding on simple inserts or pullrod inserts	$ 0.15	cm	20		1	$ 3.00
70	Weld	Steel tubes welding on double inserts	$ 0.15	cm	10		1	$ 1.50
80	Brush apply	Glue applying on inserts bores	$ 0.02	cm^2	25		1	$ 0.50
90	Assemble, 1kg, Interference	Bearings in inserts bores installation	$ 0.19		4		1	$ 0.76
100	Ratchet <=6,35mm	M3 headless bolts installation	$ 0.50		2		1	$ 1.00
110	Ratchet <=6,35mm	M4 headless bolts installation	$ 0.50		6		1	$ 3.00
120	Aerosol apply	A-arms painting	$ 5.25	m^2	0.09		1	$ 0.47
130	Assemble, 1kg, Line on line	M8 nuts positioning on pullrods	$ 0.13		1		1	$ 0.13
140	Weld	M8 nuts welding on pullrods	$ 0.15	cm	5		1	$ 0.75
150	Hand, Loose <= 25.4 mm	M8 nuts installation on rod bearings	$ 0.50		1		1	$ 0.50
160	Assemble, 1kg, Loose	Rod bearings positioning on pullrods	$ 0.06		1		1	$ 0.06
170	Hand, Loose <= 25.4 mm	Rod bearings installation on pullrods	$ 0.50		1		1	$ 0.50
180	Wrench <= 25.4 mm	M8 nuts installation on rod bearings	$ 1.50		1		1	$ 1.50
190	Assemble, 3kg, Loose	A arms positioning on steel mounts	$ 0.19		1		1	$ 0.19

200	Assemble, 1kg, Loose	Pullrod positioning on steel mounts	$ 0.06		1		1	$ 0.06
210	Assemble, 1kg, Line on line	Spacers installation	$ 0.13		6		1	$ 0.78
220	Ratchet <=25,4mm	M8 bolts installation	$ 1.00		3		1	$ 3.00
230	Reaction tool <=25,4mm	M8 nuts blocking	$ 0.25		3		1	$ 0.75
							Sub Total	**$ 24.15**

ItemOrder	Fastener	Use	UnitCost	Size1	Unit1	Size2	Unit2	Quantity	Sub Total
10	Bolt, Grade 8.8 (SAE 5)	Security headless bolts for double inserts	0.01	3	mm	5	mm	4	$ 0.04
20	Bolt, Grade 8.8 (SAE 5)	Security headless bolts for simple inserts	0.01	4	mm	4	mm	12	$ 0.12
30	Bolt, Grade 8.8 (SAE 5)	A arms fixing bolts	0.16	8	mm	40	mm	6	$ 0.96
40	Nut, Grade 8.8 (SAE 5)	A arms fixing nuts	0.04	8	mm			6	$ 0.24
50	Nut, Grade 8.8 (SAE 5)	Pullrods rod bearing nuts	0.04	8	mm			4	$ 0.16
60	Washer, Grade 8.8 (SAE 5)	A arms fixing washers	0.01	8	mm			12	$ 0.12
								Sub Total	**$ 1.64**

ItemOrder	Tooling	Use	UnitCost	Unit	Quantity	PVF	FractionIncluded	Sub Total
10	Welds - Welding Fixture	Welding processes	$ 500.00	point	28	3000	1	$ 4.67
							Sub Total	**$ 4.67**

University	Ecole Centrale de Lyon			**Car #**	81	**Part Cost**	$ 8.79
System	Suspension	**FileLink1**				**Qty**	2
Assembly	Upper Rear A-Arms / Pullrods	**FileLink2**		**FileLink1**			
Part	Upper Rear A arm Front mounts	**FileLink3**		**FileLink2**		**Extended Cost**	$ 17.58
P/N Base	04001			**FileLink3**			
Suffix	AA						
Details	The two left and two right mounts are symetrical and have therefore the same manufacturing procedure						

ItemOrder	Material	Use	UnitCost	Size1	Unit1	Size2	Unit2	Area Name	Area	Length	Density	Quantity	Sub Total
10	Steel, Mild	Material for part	$ 2.25	0.032	m	0.039	m	Rectangular 32 mmx 39 mm	0.00125	0.028	7,860.00	1	$ 0.62
												Sub Total	**$ 0.62**

ItemOrder	Process	Use	UnitCost	Unit	Quantity	Multiplier	Mult. Val.	Sub Total
10	Machining Setup, Install and remove		$ 1.30		1			$ 1.30
20	Machining	Main shape contouring	$ 0.04	cm^3	13.7	Material - Steel	3	$ 1.64
30	Machining Setup Change		$ 0.65	unit	1			$ 0.65
40	Drilled holes < 25.4 mm dia.	A-arm fixing hole drilling	$ 0.35	hole	1	Hole length >4D	1.5	$ 0.53
50	Machining Setup, Install and remove		$ 1.30		1			$ 1.30
60	Machining	Central groove machinig	$ 0.04	cm^3	11.5	Material - Steel	3	$ 1.38
70	Machining Setup, Install and remove		$ 1.30		1			$ 1.30
80	Machining	Tube cavities machining	$ 0.04	cm^3	0.6	Material - Steel	3	$ 0.07
							Sub Total	**$ 8.17**

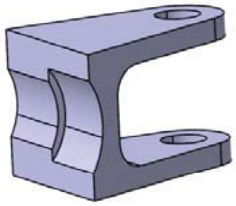

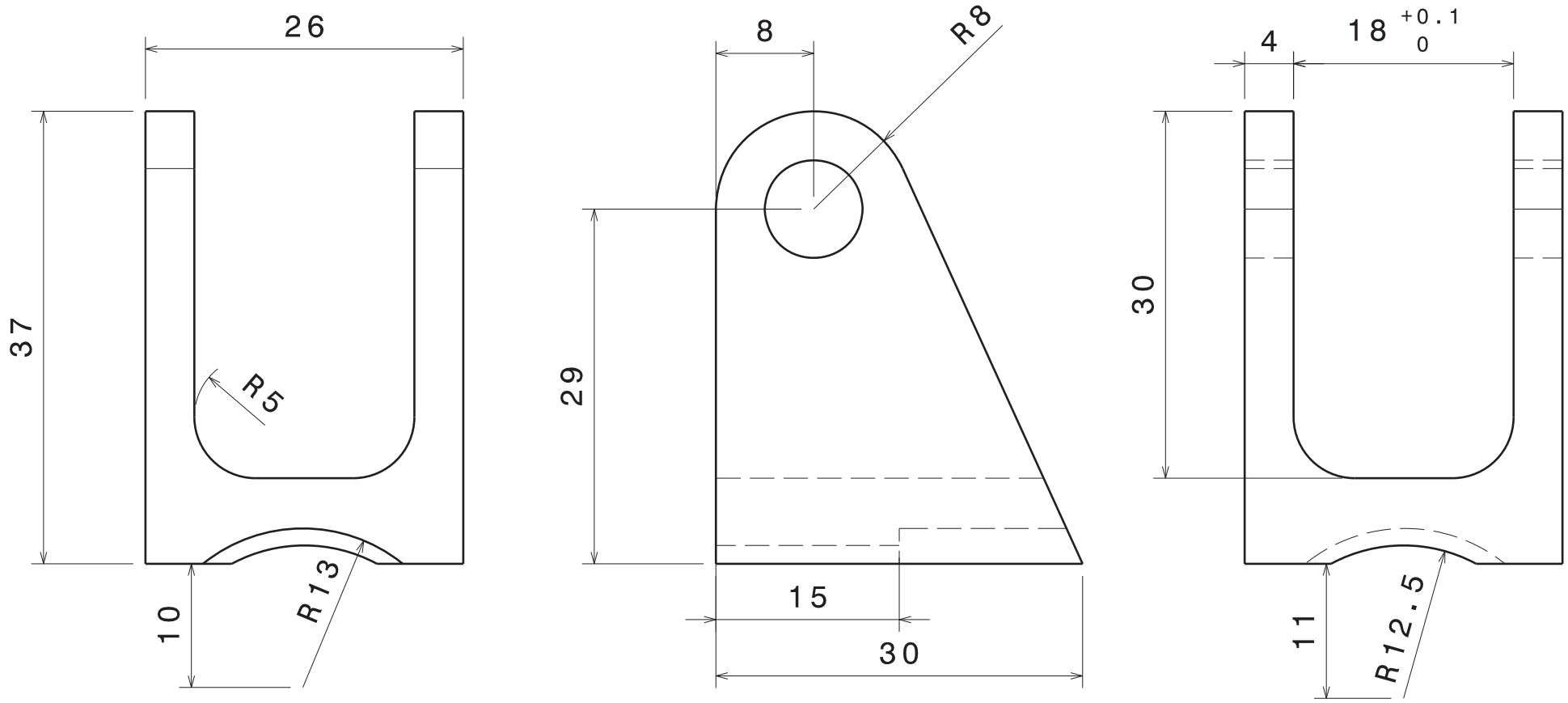

Tolérances générales ISO 2768 - mK

Taille A4		Ecurie Piston Sport Auto
Dessiné par Thomas Derouin	Date 15/12/2013	Désignation: Chape triangle ar sup av
Coordonnées 06 50 61 35 55 thomas.derouin@ecl2015.ec-lyon.fr		Quantité 2 / Matériau Acier S235 / Version 1.0
Date de livraison souhaitée 14/01/2014		Echelle 2:1 / Numéro du plan 14B060 / Feuille 1/1

University	Ecole Centrale de Lyon			**Car #**	81	**Part Cost**	$ 11.14
System	Suspension	**FileLink1**				**Qty**	2
Assembly	Upper Rear A-Arms / Pullrods	**FileLink2**		**FileLink1**			
Part	Upper Rear A arm Rear mounts	**FileLink3**		**FileLink2**		**Extended Cost**	$ 22.28
P/N Base	04002			**FileLink3**			
Suffix	AA						
Details	The two left and two right mounts are symetrical and have therefore the same manufacturing procedure						

ItemOrder	Material	Use	UnitCost	Size1	Unit1	Size2	Unit2	Area Name	Area	Length	Density	Quantity	Sub Total
10	Steel, Mild	Material for part	$ 2.25	0.040	m	0.052	m	Rectangular 40 mmx 52 mm	0.00208	0.028	7,860.00	1	$ 1.03
												Sub Total	**$ 1.03**

ItemOrder	Process	Use	UnitCost	Unit	Quantity	Multiplier	Mult. Val.	Sub Total
10	Machining Setup, Install and remove		$ 1.30		1			$ 1.30
20	Machining	Main shape contouring	$ 0.04	cm^3	8.8	Material - Steel	3	$ 1.06
30	Machining Setup Change		$ 0.65	unit	1			$ 0.65
40	Drilled holes < 25.4 mm dia.	A-arm fixing hole drilling	$ 0.35	hole	2	Hole length >4D	1.5	$ 1.05
50	Machining Setup, Install and remove		$ 1.30		1			$ 1.30
60	Machining	Central groove machinig	$ 0.04	cm^3	27.6	Material - Steel	3	$ 3.31
70	Machining Setup, Install and remove		$ 1.30		1			$ 1.30
80	Machining	Tube cavity machining	$ 0.04	cm^3	1.2	Material - Steel	3	$ 0.14
							Sub Total	**$ 10.11**

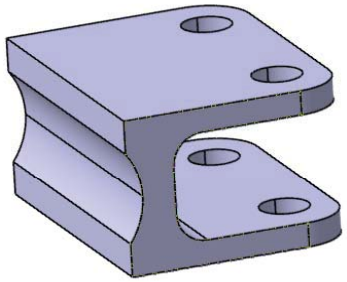

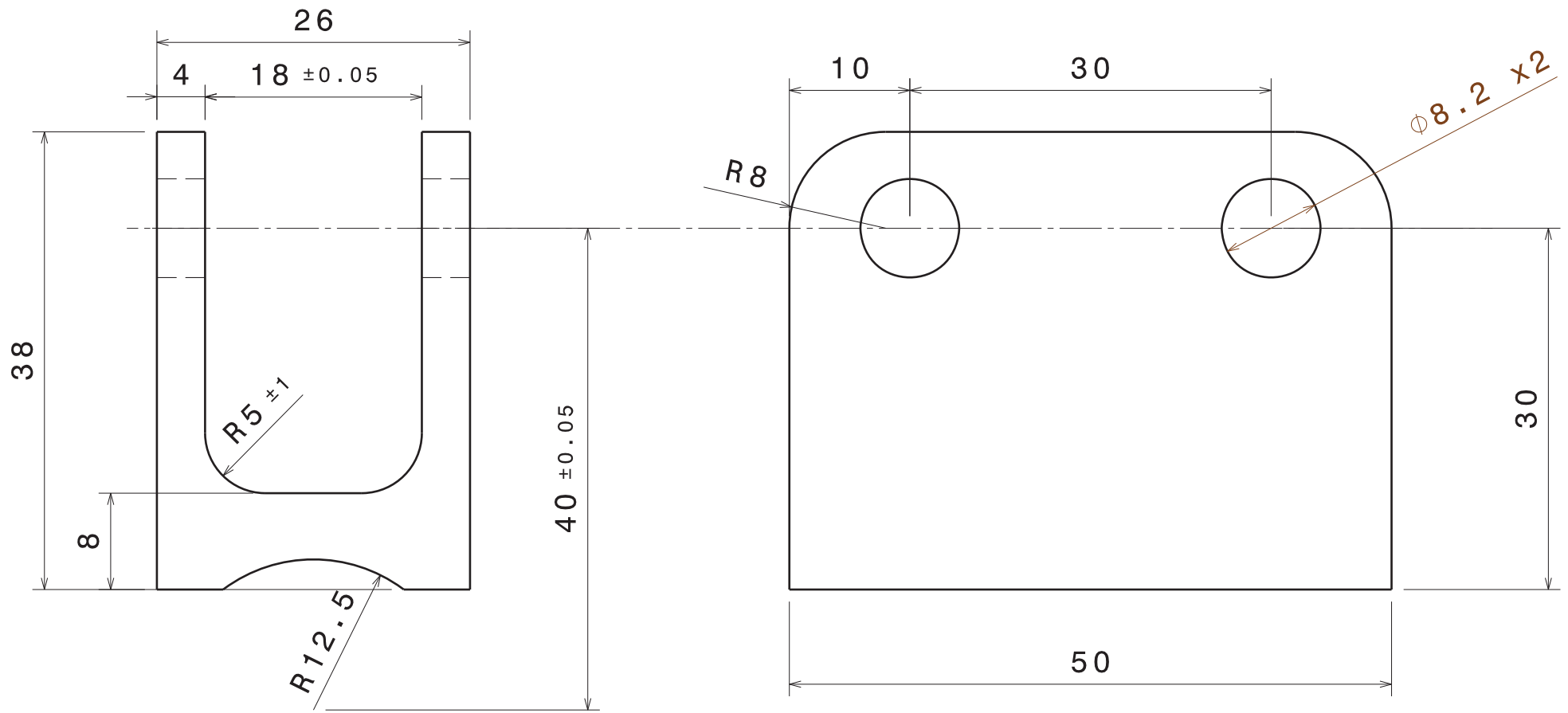

Tolérances générales ISO 2768 - mK

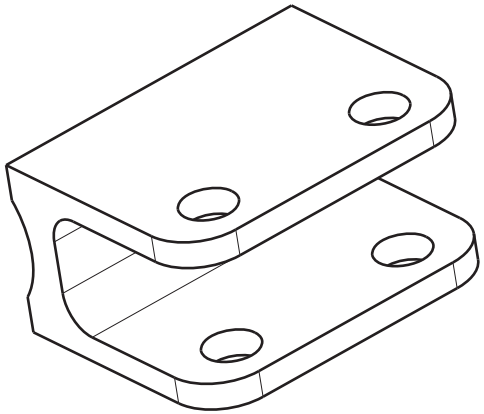

Taille A4		Ecurie Piston Sport Auto
Dessiné par Thomas Derouin	Date 24/11/2013	Désignation: Chape triangle ar sup ar
Coordonnées 06 50 61 35 55 thomas.derouin@ecl2015.ec-lyon.fr		Quantité 2 / Matériau Acier S235 / Version 1.0
Vérifié par	Date	Echelle 2:1 / Numéro du plan 14B057 / Feuille 1/1

390

University	Ecole Centrale de Lyon			**Car #**	81	**Part Cost**	$ 3.15
System	Suspension	**FileLink1**				**Qty**	4
Assembly	Upper Rear A-Arms / Pullrods	**FileLink2**		**FileLink1**			
Part	Simple insert	**FileLink3**		**FileLink2**		**Extended Cost**	$ 12.61
P/N Base	04003			**FileLink3**			
Suffix	AA						
Details							

ItemOrder	Material	Use	UnitCost	Size1	Unit1	Size2	Unit2	Area Name	Area	Length	Density	Quantity	Sub Total
10	Steel, mild	Material for part	$ 2.25	0.017	m			Round 17 mm Diameter	2.27E-04	0.027	7,860.00	1	$ 0.11
												Sub Total	**$ 0.11**

ItemOrder	Process	Use	UnitCost	Unit	Quantity	Multiplier	Mult. Val.	Sub Total
10	Machining Setup, Install and remove		$ 1.30		1			$ 1.30
20	Machining	Main shape contouring	$ 0.04	cm^3	2.7	Material - Steel	3	$ 0.32
30	Machining Setup, Install and remove		$ 1.30		1			$ 1.30
40	Machining	Groove machining	$ 0.04	cm^3	1	Material - Steel	3	$ 0.12
							Sub Total	**$ 3.04**

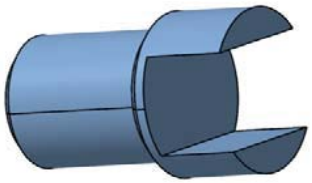

University	Ecole Centrale de Lyon			**Car #**	81	**Part Cost**	$ 4.39
System	Suspension	**FileLink1**				**Qty**	6
Assembly	Upper Rear A-Arms / Pullrods	**FileLink2**		**FileLink1**			
Part	Bearing support	**FileLink3**		**FileLink2**		**Extended Cost**	$ 26.35
P/N Base	04004			**FileLink3**			
Suffix	AA						
Details							

ItemOrder	Material	Use	UnitCost	Size1	Unit1	Size2	Unit2	Area Name	Area	Length	Density	Quantity	Sub Total
10	Steel, mild	Material for part	$ 2.25	0.041	m	0.032	m	Rectangular 41mm x 32 mm	1.31E-03	0.011	7,860.00	1	$ 0.26
												Sub Total	**$ 0.26**

ItemOrder	Process	Use	UnitCost	Unit	Quantity	Multiplier	Mult. Val.	Sub Total
10	Machining Setup, Install and remove		$ 1.30		1			$ 1.30
20	Machining	Main shape contouring	$ 0.04	cm^3	2.8	Material - Steel	3	$ 0.34
30	Machining	Bearing bore machining	$ 0.04	cm^3	3.5	Material - Steel	3	$ 0.42
40	Machining Setup, Install and remove		$ 1.30		1			$ 1.30
50	Drilled holes < 25.4 mm dia.		$ 0.35		2			$ 0.70
60	Threading, Internal (machining)		$ 0.10	cm	0.8			$ 0.08
							Sub Total	**$ 4.14**

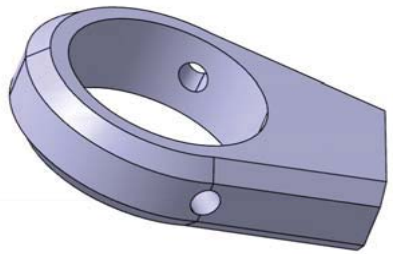

University	Ecole Centrale de Lyon			**Car #**	81	**Part Cost**	$ 36.27
System	Suspension	**FileLink1**				**Qty**	2
Assembly	Upper Rear A-Arms / Pullrods	**FileLink2**		**FileLink1**			
Part	Upper front double insert	**FileLink3**		**FileLink2**		**Extended Cost**	$ 72.55
P/N Base	04005			**FileLink3**			
Suffix	AA						
Details							

ItemOrder	Material	Use	UnitCost	Size1	Unit1	Size2	Unit2	Area Name	Area	Length	Density	Quantity	Sub Total
10	Steel,mild		$ 2.25	0.068	m	0.069	m	Rectangular 68mmx69mm	0.004692	0.046	7,860.00	1	$ 3.82
												Sub Total	**$ 3.82**

ItemOrder	Process	Use	UnitCost	Unit	Quantity	Multiplier	Mult. Val.	Sub Total
10	Machining Setup, Install and remove		$ 1.30		1			$ 1.30
20	Machining	Main shape contouring	$ 0.04	cm^3	144	Material - Steel	3	$ 17.28
30	Machining Setup, Install and remove		$ 1.30		1			$ 1.30
40	Machining	bottom side machining	$ 0.04	cm^3	5.4	Material - Steel	3	$ 0.65
50	Machining Setup, Install and remove		$ 1.30		1			$ 1.30
60	Machining	First tube hole machining	$ 0.04	cm^3	3.5	Material - Steel	3	$ 0.42
70	Machining Setup, Install and remove		$ 1.30		1			$ 1.30
80	Machining	Second tube hole machining	$ 0.04	cm^3	3.5	Material - Steel	3	$ 0.42
90	Machining Setup, Install and remove		1.3		1			$ 1.30
100	Machining	Angle machining	0.04	cm^3	11.9	Material - Steel	3	$ 1.43
110	Machining Setup, Install and remove		$ 1.30		1			$ 1.30
120	Machining	Main hole machining	$ 0.04	cm^3	4	Material - Steel	3	$ 0.48
130	Machining Setup, Install and remove		$ 1.30		1			$ 1.30
140	Machining	Suspension rod support machining	$ 0.04	cm^3	1.2	Material - Steel	3	$ 0.14
150	Drilled holes < 25.4 mm dia.	Suspension rod support hole drilling	$ 0.35		1	Hole length >2D	1.25	$ 0.44
160	Machining Setup, Install and remove		$ 1.30		1			$ 1.30
170	Drilled holes < 25.4 mm dia.	M3 holes drilling	$ 0.35	hole	2			$ 0.70
180	Threading, Internal (machining)		$ 0.10	cm	1			$ 0.10
							Sub Total	**$ 32.46**

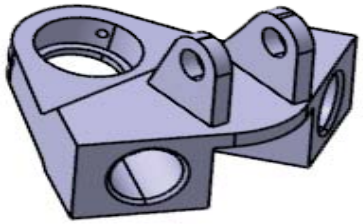

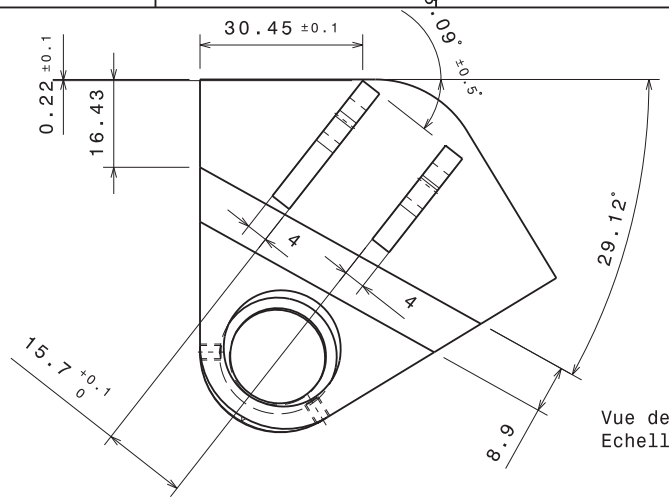

Vue de dessous
Echelle : 1:1

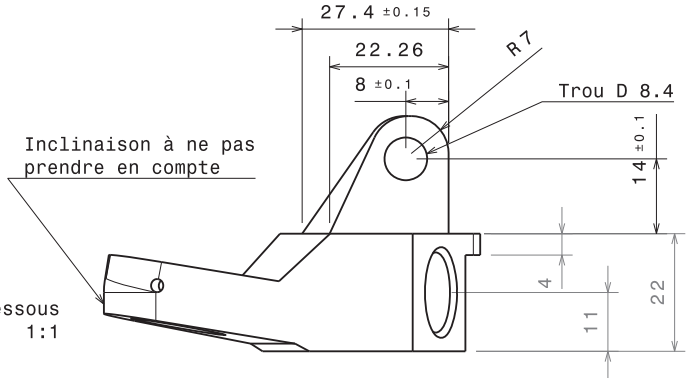

Vue de face
Echelle : 1:1

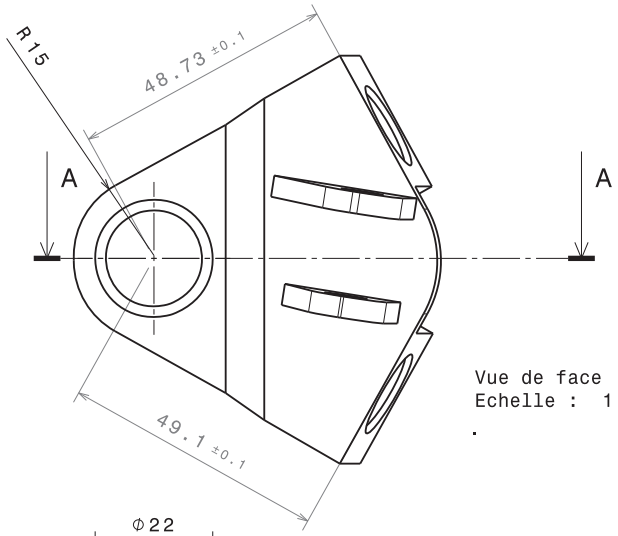

Vue de face
Echelle : 1:1

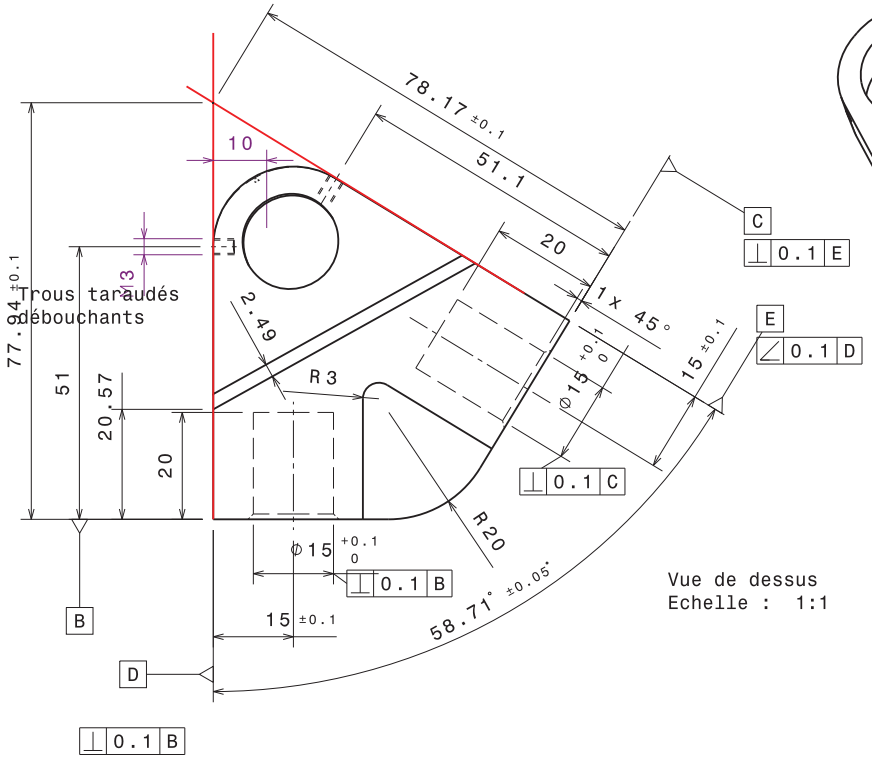

Vue de dessus
Echelle : 1:1

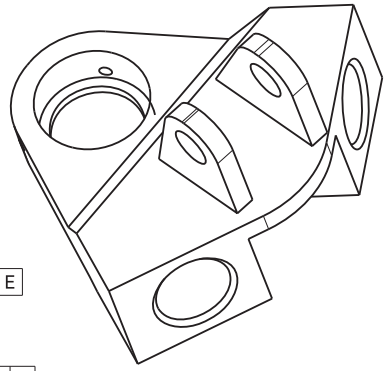

Vue isométrique
Echelle : 1:1

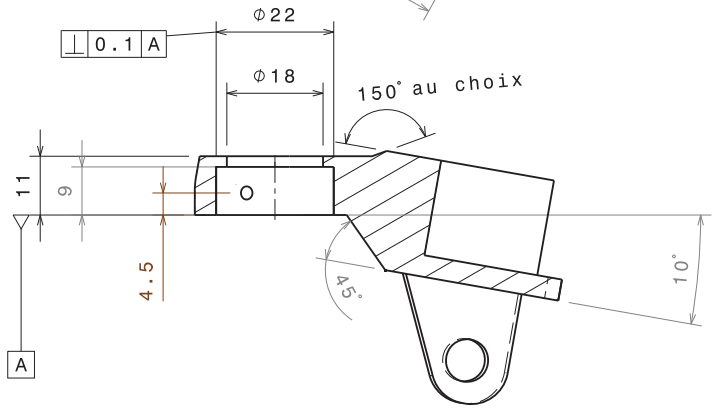

Coupe A-A
Echelle : 1:1

Tolérances générales ISO 2768-mK

Tolérances sur les alésages de 22 et 15 à discuter

Taille A3		Ecurie Piston Sport Auto
Dessiné par Clément BOURQUARD	Date 28/11/2013	Désignation: Insert triangle arr sup 1
Coordonnées 06 33 03 95 75 clement.bourquard@ecl2015.ec-lyon.fr		Quantité: 1 / Matériau: Acier S235 / Version: v2.0
Date de livraison souhaitée 15/01/2014		Echelle 1:1 / Numéro du plan 14B022 / Feuille 1/1

University	Ecole Centrale de Lyon			**Car #**	81	**Part Cost**	$ 3.15
System	Suspension	**FileLink1**				**Qty**	4
Assembly	Upper Rear A-Arms / Pullrods	**FileLink2**		**FileLink1**			
Part	Pullrod insert	**FileLink3**		**FileLink2**		**Extended Cost**	$ 12.61
P/N Base	04006			**FileLink3**			
Suffix	AA						
Details							

ItemOrder	Material	Use	UnitCost	Size1	Unit1	Size2	Unit2	Area Name	Area	Length	Density	Quantity	Sub Total
10	Steel, mild	Material for part	$ 2.25	0.017	m			Round 17 mm Diameter	2.27E-04	0.027	7,860.00	1	$ 0.11
												Sub Total	**$ 0.11**

ItemOrder	Process	Use	UnitCost	Unit	Quantity	Multiplier	Mult. Val.	Sub Total
10	Machining Setup, Install and remove		$ 1.30		1			$ 1.30
20	Machining	Main shape contouring	$ 0.04	cm^3	2.7	Material - Steel	3	$ 0.32
30	Machining Setup, Install and remove		$ 1.30		1			$ 1.30
40	Machining	Groove machining	$ 0.04	cm^3	1	Material - Steel	3	$ 0.12
							Sub Total	**$ 3.04**

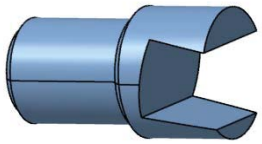

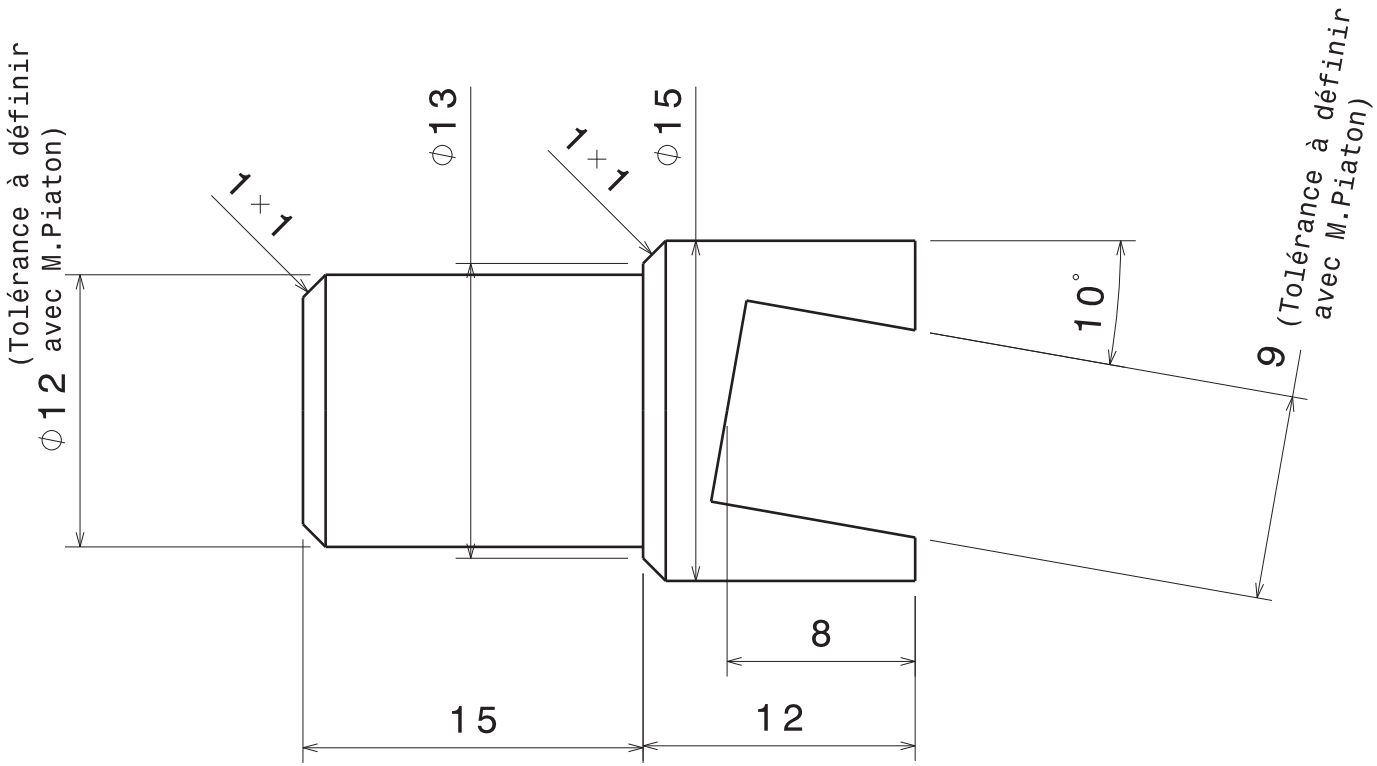

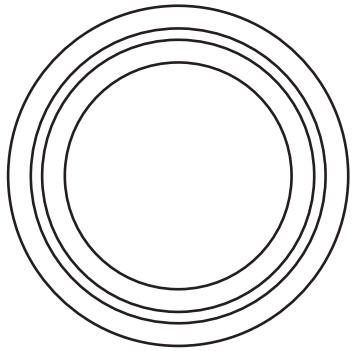

Tolérances générales ISO 2768 - mK

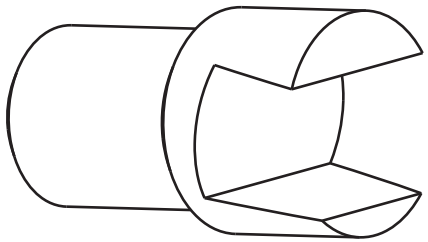

Taille A4		Ecurie Piston Sport Auto
Dessiné par Thomas Derouin	Date 08/01/14	Désignation Insert coudé tube triangle
Coordonnées 06 50 61 35 55 thomas.derouin@ecl2015.ec-lyon.fr		
Date de livraison souhaitée 21/01/14		

Quantité	Matériau	Version
6	Acier S235	0.9
Echelle 3:1	Numéro du plan 14B052	Feuille 1/1

University	Ecole Centrale de Lyon			**Car #**	81	**Part Cost**	$ 1.33
System	Suspension	**FileLink1**				**Qty**	12
Assembly	Upper Rear A-Arms / Pullrods	**FileLink2**		**FileLink1**			
Part	Spacer	**FileLink3**		**FileLink2**		**Extended Cost**	$ 16.01
P/N Base	04007			**FileLink3**			
Suffix	AA						
Details							

ItemOrder	Material	Use	UnitCost	Size1	Unit1	Size2	Unit2	Area Name	Area	Length	Density	Quantity	Sub Total
10	Aluminum, Normal	Material for part	$ 4.20	0.018	m			Cylindrical diameter 18 mm	2.54E-04	0.005	2,710.00	1	$ 0.01
												Sub Total	**$ 0.01**

ItemOrder	Process	Use	UnitCost	Unit	Quantity	Multiplier	Mult. Val.	Sub Total
10	Machining Setup, Install and remove		$ 1.30		1			$ 1.30
20	Machining		$ 0.04	cm^3	0.5	Material - Aluminium	1	$ 0.02
							Sub Total	**$ 1.32**

University	Ecole Centrale de Lyon	**Car #**	81	**Asm Cost**	$ 338.89
System	Suspension			**Qty**	2
Assembly	Front suspension	**FileLink1**			
P/N Base	A0005	**FileLink2**		**Extended Cost**	$ 677.77
Suffix	AA	**FileLink3**			
Details	Assembly of the Front suspension				

ItemOrder	Part	Part Cost	Quantity	Sub Total
10	Dampers	$ 305.00	1	$ 305.00
20	Springs	$ 25.00	1	$ 25.00
30	Front suspension mount	$ 3.96	1	$ 3.96
			Sub Total	**$ 333.96**

ItemOrder	Material	Use	UnitCost	Size1	Unit1	Size2	Unit2	Area Name	Area	Length	Density	Quantity	Sub Total
10	Paint	Front suspension mount red paint	$ 10.00	0.004	m^2							1	$ 0.04
												Sub Total	**$ 0.04**

ItemOrder	Process	Use	UnitCost	Unit	Quantity	Multiplier	Mult. Val.	Sub Total
10	Weld	Welding the suspension mounts on the frame	$ 0.15	cm	4.712	Repeat 2	2	$ 1.41
20	Aerosol apply	Painting of suspension mount in red	$ 5.25	m^2	0.004			$ 0.02
30	Assemble, 1 kg, Loose	Attaching springs to dampers	$ 0.06	unit	1			$ 0.06
40	Assemble, 1 kg, Loose	Put the damper in place	$ 0.06	unit	1			$ 0.06
50	Ratchet <= 25.4 mm	Bolt damper to suspension mount	$ 0.75	unit	1			$ 0.75
60	Reaction Tool <= 25.4 mm	Thigten the M8 nuts	$ 0.25	unit	1			$ 0.25
70	Assemble, 1 kg, Loose	Put the damper in place	$ 0.06	unit	1			$ 0.06
80	Ratchet <= 25.4 mm	Bolt damper to rocker	$ 0.75	unit	1			$ 0.75
90	Reaction Tool <= 25.4 mm	Thigten the M8 nuts	$ 0.25	unit	1			$ 0.25
							Sub Total	**$ 3.61**

ItemOrder	Fastener	Use	UnitCost	Size1	Unit1	Size2	Unit2	Quantity	Sub Total
10	Bolt, Grade 8.8 (SAE 5)		$ 0.21	8	mm	50	mm	1	$ 0.21
20	Bolt, Grade 8.8 (SAE 5)		$ 0.24	8	mm	55	mm	1	$ 0.24
30	Nut, Grade 8.8 (SAE 5)		$ 0.04	8	mm			2	$ 0.08
40	Washer, Grade 8.8 (SAE 5)		$ 0.01	8	mm			8	$ 0.08
								Sub Total	**$ 0.61**

ItemOrder	Tooling	Use	UnitCost	Unit	Quantity	PVF	FractionIncluded	Sub Total
10	Welds-welding Fixture	Welding of the mounts the frame	$ 500.00	point	4	3000	1	$ 0.67
							Sub Total	**$ 0.67**

University	Ecole Centrale de Lyon			**Car #**	81	**Part Cost**	$ 305.00
System	Suspension	**FileLink1**				**Qty**	2
Assembly	Front suspension	**FileLink2**		**FileLink1**			
Part	Dampers	**FileLink3**		**FileLink2**		**Extended Cost**	$ 610.00
P/N Base	05001			**FileLink3**			
Suffix	AA						
Details	Damper, Ohlins TTX 25						

ItemOrder	Material	Use	UnitCost	Size1	Unit1	Size2	Unit2	Area Name	Area	Length	Density	Quantity	Sub Total
10	Damper, Ohlins TTX 25	Dampers	$ 305.00									1	$ 305.00
												Sub Total	**$ 305.00**

University	Ecole Centrale de Lyon			**Car #**	81	**Part Cost**	$ 25.00
System	Suspension	**FileLink1**				**Qty**	2
Assembly	Front suspension	**FileLink2**		**FileLink1**			
Part	Springs	**FileLink3**		**FileLink2**		**Extended Cost**	$ 50.00
P/N Base	05002			**FileLink3**			
Suffix	AA						
Details							

ItemOrder	Material	Use	UnitCost	Size1	Unit1	Size2	Unit2	Area Name	Area	Length	Density	Quantity	Sub Total
10	Suspension Springs, Coil Spring, Steel	Spring for the dampers	$ 25.00									1	$ 25.00
												Sub Total	**$ 25.00**

University	Ecole Centrale de Lyon			**Car #**	81	**Part Cost**	$ 3.96
System	Suspension	**FileLink1**				**Qty**	2
Assembly	Front suspension	**FileLink2**		**FileLink1**			
Part	Suspension mount	**FileLink3**		**FileLink2**		**Extended Cost**	$ 7.91
P/N Base	05003			**FileLink3**			
Suffix	AA						
Details							

ItemOrder	Material	Use	UnitCost	Size1	Unit1	Size2	Unit2	Area Name	Area	Length	Density	Quantity	Sub Total
10	Steel, Mild	Sheet metal for the suspension mount	$ 2.25	42	mm	45	mm	Rectangular area 42mm x 45mm	1.89E-03	0.004	7860	2	$ 0.27
												Sub Total	**$ 0.27**

ItemOrder	Process	Use	UnitCost	Unit	Quantity	Multiplier	Mult. Val.	Sub Total
10	Machining Setup, Install and remove	Install and remove part from laser machine	$ 1.30	unit	1	Repeat 2	2	$ 2.60
20	Laser cut		$ 0.01	cm	18.13	Repeat 2 and Material Steel	6	$ 1.09
							Sub Total	**$ 3.69**

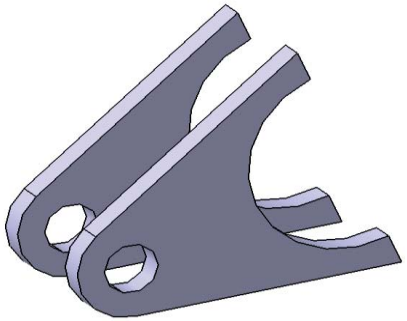

University	Ecole Centrale de Lyon	**Car #**	81	**Asm Cost**	$ 20.89
System	Suspension			**Qty**	2
Assembly	Front rocker	**FileLink1**			
P/N Base	A0006	**FileLink2**		**Extended Cost**	$ 41.79
Suffix	AA	**FileLink3**			
Details	Assembly of the Front rocker				

ItemOrder	Part	Part Cost	Quantity	Sub Total
10	Sheets metal of the Rocker	$ 6.49	1	$ 6.49
20	Cylinder	$ 1.98	1	$ 1.98
30	Bushing	$ 1.32	2	$ 2.64
40	Rocker mount	$ 4.42	1	$ 4.42
			Sub Total	**$ 15.53**

ItemOrder	Process	Use	UnitCost	Unit	Quantity	Multiplier	Mult. Val.	Sub Total
10	Weld	Welding of the rocker mounts on the frame	$ 0.15	cm	9.42			$ 1.41
20	Aerosol apply	Painting of the rocker mount in red	$ 5.25	m^2	0.008			$ 0.04
30	Weld	Welding of the cylinder on the two sheets metal of the rocker	$ 0.15	cm	6.28	Repeat 2	2	$ 1.88
40	Brush Apply	Varnishing of the rocker and the cylinders	$ 0.02	cm^2	0.024			$ 0.00
50	Assemble, 1 kg, Interference	Insert 2 bronze bushings into the rocker	$ 0.19	unit	2			$ 0.38
60	Assemble, 1 kg, Loose	Put the rocker in place	$ 0.06	unit	1.00			$ 0.06
70	Ratchet <= 25.4 mm	Bolt rocker to rocker mount	$ 0.75	unit	1.00			$ 0.75
80	Reaction Tool <= 25.4 mm	Thigten the M8 nuts	$ 0.25	unit	1.00			$ 0.25
							Sub Total	**$ 3.36**

ItemOrder	Fastener	Use	UnitCost	Size1	Unit1	Size2	Unit2	Quantity	Sub Total
10	Nut, Grade 8.8 (SAE 5)		$ 0.04	8	mm			1	$ 0.04
20	Washer, Grade 8.8 (SAE 5)		$ 0.01	8	mm			1	$ 0.01
30	Bolt, Grade 8.8 (SAE 5)	Hexagon socket headless screw	$ 0.26	8	mm	60	mm	1	$ 0.26
								Sub Total	**$ 0.31**

ItemOrder	Tooling	Use	UnitCost	Unit	Quantity	PVF	FractionIncluded	Sub Total
10	Welds-welding Fixture	Welding of the cylinder on the steel sheet	$ 500.00	point	12	3000	1	$ 2.00
							Sub Total	**$ 2.00**

University	Ecole Centrale de Lyon			**Car #**	81	**Part Cost**	$ 6.49
System	Suspension	**FileLink1**				**Qty**	2
Assembly	Front rocker	**FileLink2**		**FileLink1**			
Part	Sheets metal of the Rocker	**FileLink3**		**FileLink2**		**Extended Cost**	$ 12.97
P/N Base	06001			**FileLink3**			
Suffix	AA						
Details							

ItemOrder	Material	Use	UnitCost	Size1	Unit1	Size2	Unit2	Area Name	Area	Length	Density	Quantity	Sub Total
10	Steel, Mild	Sheet metal for the rocker	$ 2.25	162	mm	36.23	mm	Rectangular area 162mm x 36,23 mm	5.87E-03	0.006	7860	2	$ 1.25
												Sub Total	**$ 1.25**

ItemOrder	Process	Use	UnitCost	Unit	Quantity	Multiplier	Mult. Val.	Sub Total
10	Machining Setup, Install and remove	Install and remove parts from laser machine	$ 1.30	unit	1	Repeat 2	2	$ 2.60
20	Laser cut		$ 0.01	cm	44	Repeat 2 and Material Steel	6	$ 2.64
							Sub Total	**$ 5.24**

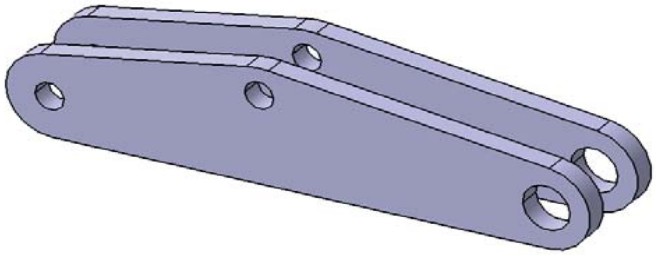

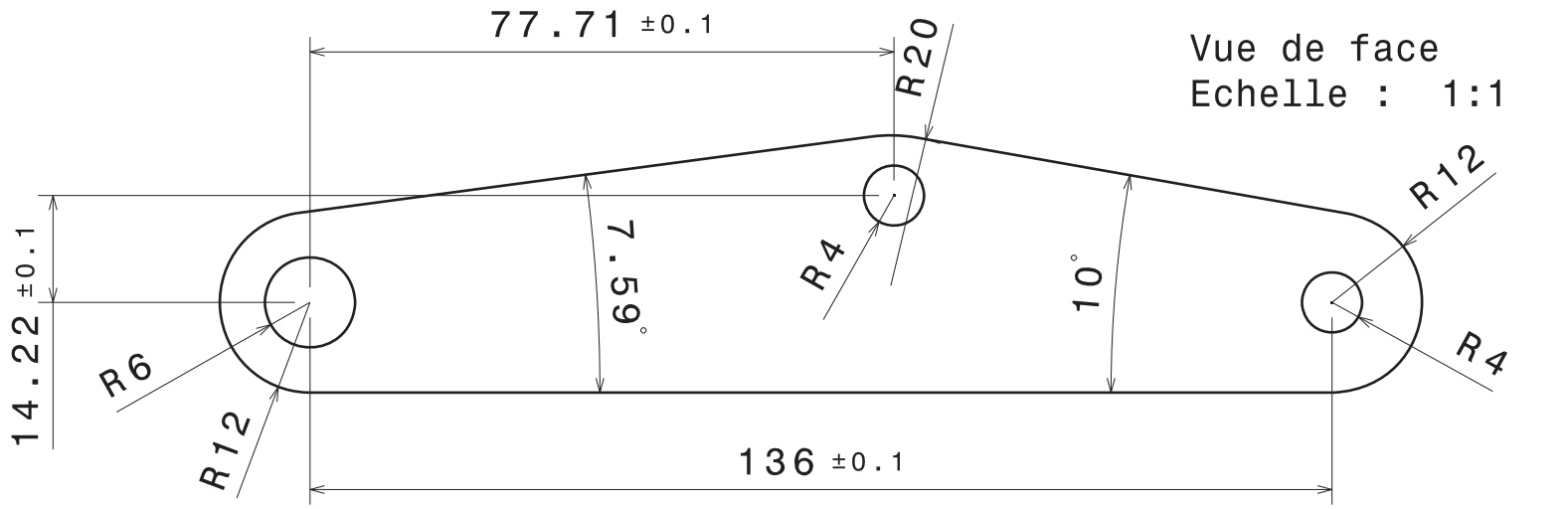

Vue de face
Echelle : 1:1

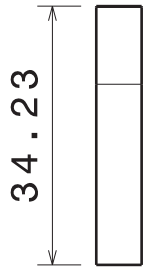

Vue de gauche
Echelle : 1:1

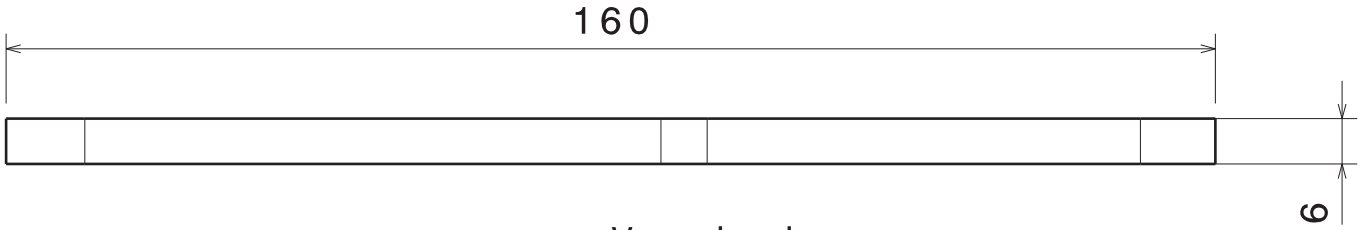

Vue de dessus
Echelle : 1:1

Tolérance générale : 2768-mk

Taille A4		Ecurie Piston Sport Auto
Dessiné par Yoann GIMBERT	Date 03/12/2013	Désignation Plaque Basculeur Avant
Coordonnées 06.24.20.21.67 yoann.gimbert@ecl2015.ec-lyon.fr		Quantité 4 / Matériau Acier S235 / Version v1.0
Date de livraison souhaitée 14/01/2014		Echelle 1:1 / Numéro du plan 14 M065 / Feuille 1/1

University	Ecole Centrale de Lyon			**Car #**	81	**Part Cost**	$ 1.98
System	Suspension	**FileLink1**				**Qty**	2
Assembly	Front rocker	**FileLink2**		**FileLink1**			
Part	Cylinder	**FileLink3**		**FileLink2**		**Extended Cost**	$ 3.97
P/N Base	06002			**FileLink3**			
Suffix	AA						
Details	Cylinder to assure the pivot linkage						

ItemOrder	Material	Use	UnitCost	Size1	Unit1	Size2	Unit2	Area Name	Area	Length	Density	Quantity	Sub Total
10	Steel, Mild	Stock material for cylinder	$ 2.25	11	mm			Round Area radius 11mm	3.80E-04	1.77E-02	7860	1	$ 0.12
												Sub Total	**$ 0.12**

ItemOrder	Process	Use	UnitCost	Unit	Quantity	Multiplier	Mult. Val.	Sub Total
10	Machining Setup, Install and remove	Install and remove parts	$ 1.30	unit	1			$ 1.30
20	Machining	Outer profile	$ 0.04	cm^3	1.80	Material steel	3	$ 0.22
30	Drilled holes < 25.4 mm dia.	Hole for the pivot	$ 0.35	hole	1			$ 0.35
							Sub Total	**$ 1.87**

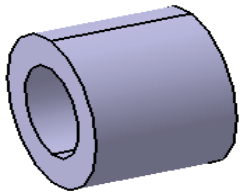

University	Ecole Centrale de Lyon			**Car #**	81	**Part Cost**	$ 1.32
System	Suspension	**FileLink1**				**Qty**	4
Assembly	Front rocker	**FileLink2**		**FileLink1**			
Part	Bushing	**FileLink3**		**FileLink2**		**Extended Cost**	$ 5.28
P/N Base	06003			**FileLink3**			
Suffix	AA						
Details							

ItemOrder	Material	Use	UnitCost	Size1	Unit1	Size2	Unit2	Area Name	Area	Length	Density	Quantity	Sub Total
10	Bronze (per kg)	Stock material for bushings	$ 2.20	5	mm			Round area, radius 5mm	7.85E-05	0.01	6400	1	$ 0.01
												Sub Total	**$ 0.01**

ItemOrder	Process	Use	UnitCost	Unit	Quantity	Multiplier	Mult. Val.	Sub Total
10	Machining Setup, Install and remove	Setup machining (turning) and removal	$ 1.30	unit	1			$ 1.30
20	Machining	Machining of the bushing (turning)	$ 0.04	cm^3	0.26	Material Bronze	1.33	$ 0.01
							Sub Total	**$ 1.31**

University	Ecole Centrale de Lyon			**Car #**	81	**Part Cost**	$ 4.42
System	Suspension	**FileLink1**				**Qty**	2
Assembly	Front rocker	**FileLink2**		**FileLink1**			
Part	Rocker mount	**FileLink3**		**FileLink2**		**Extended Cost**	$ 8.84
P/N Base	06004			**FileLink3**			
Suffix	AA						
Details							

ItemOrder	Material	Use	UnitCost	Size1	Unit1	Size2	Unit2	Area Name	Area	Length	Density	Quantity	Sub Total
10	Steel, Mild	Sheet metal for the rocker mount	$ 2.25	44	mm	67	mm	Rectangular area 44mm x 67mm	2.95E-03	0.004	7860	2	$ 0.42
												Sub Total	**$ 0.42**

ItemOrder	Process	Use	UnitCost	Unit	Quantity	Multiplier	Mult. Val.	Sub Total
10	Machining Setup, Install and remove	Install and remove part from laser machine	$ 1.30	unit	1	Repeat 2	2	$ 2.60
20	Laser cut	Cut out the outline	$ 0.01	cm	23.41	Repeat 2 and Material Steel	6	$ 1.40
							Sub Total	**$ 4.00**

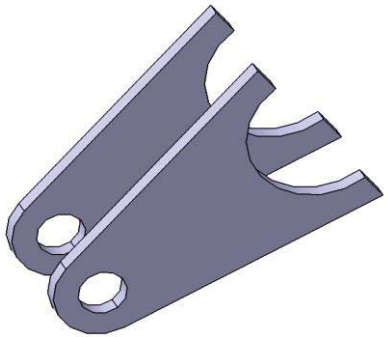

University	Ecole Centrale de Lyon	**Car #**	81	**Asm Cost**	$ 18.82
System	Suspension			**Qty**	2
Assembly	Front tie-rod	**FileLink1**			
P/N Base	A0007	**FileLink2**		**Extended Cost**	$ 37.63
Suffix	AA	**FileLink3**			
Details	Assembly of the Front tie-od which actuates the suspensions				

ItemOrder	Part	Part Cost	Quantity	Sub Total
10	Rod tube	$ 0.44	1	$ 0.44
20	Tie rod right hand insert	$ 2.47	1	$ 2.47
30	Tie rod left hand insert	$ 2.47	1	$ 2.47
			Sub Total	**$ 5.38**

ItemOrder	Material	Use	UnitCost	Size1	Unit1	Size2	Unit2	Area Name	Area	Length	Density	Quantity	Sub Total
10	Rod End, Industrial	Right-hand rod End for tie-rod extremities	$ 2.50	8	mm							1	$ 2.50
20	Rod End, Industrial	Left-hand rod End for tie-rod extremities	$ 2.50	8	mm							1	$ 2.50
												Sub Total	**$ 5.00**

ItemOrder	Process	Use	UnitCost	Unit	Quantity	Multiplier	Mult. Val.	Sub Total
10	Weld	Welding of inserts on tube	$ 0.15	cm	4.71	repeat 2	2	$ 1.41
20	Aerosol apply	Painting of tie-rod in red	$ 5.25	m^2	0.009			$ 0.05
30	Wrench <= 25.4 mm	Put the nuts on the rod ends	$ 1.50	unit	2			$ 3.00
40	Reaction Tool <= 25.4 mm	Tighten the M8 nut to lock the rod end in the insert	$ 0.25	unit	2			$ 0.50
50	Assemble, 1 kg, Loose	Put the tie-rod in place	$ 0.06	unit	1			$ 0.06
60	Ratchet <= 25.4 mm	Bolt tie-rod to upper front double insert	$ 0.75	unit	1			$ 0.75
70	Reaction Tool <= 25.4 mm	Thigten the M8 nuts	$ 0.25	unit	1			$ 0.25
80	Assemble, 1 kg, Loose	Put the tie rod in place	$ 0.06	unit	1			$ 0.06
90	Ratchet <= 25.4 mm	Bolt tie rod to rocker	$ 0.75	unit	1			$ 0.75
100	Reaction Tool <= 25.4 mm	Thigten the M8 nuts	$ 0.25	unit	1			$ 0.25
							Sub Total	**$ 7.08**

ItemOrder	Fastener	Use	UnitCost	Size1	Unit1	Size2	Unit2	Quantity	Sub Total
10	Nut, Grade 8.8 (SAE 5)	Left-hand thread	$ 0.04	8	mm			1	$ 0.04
20	Nut, Grade 8.8 (SAE 5)	right-hand thread	$ 0.04	8	mm			1	$ 0.04
30	Bolt, Grade 8.8 (SAE 5)	Bolt tie-rod to upper front double insert	$ 0.21	8	mm	50	mm	1	$ 0.21
40	Bolt, Grade 8.8 (SAE 5)	Bolt tie rod to rocker	$ 0.24	8	mm	55	mm	1	$ 0.24
50	Nut, Grade 8.8 (SAE 5)		$ 0.04	8	mm			2	$ 0.08
60	Washer, Grade 8.8 (SAE 5)		$ 0.01	8	mm			8	$ 0.08
								Sub Total	**$ 0.69**

ItemOrder	Tooling	Use	UnitCost	Unit	Quantity	PVF	FractionIncluded	Sub Total
10	Welds-Welding Fixture	Steel mounts welding on frame	$ 500.00	point	4	3000	1	$ 0.67
							Sub Total	**$ 0.67**

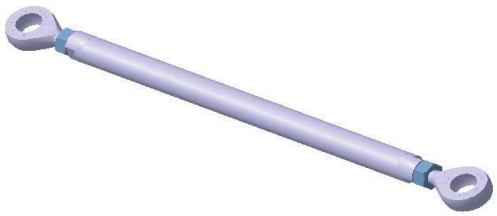

University	Ecole Centrale de Lyon			**Car #**	81	**Part Cost**	$ 0.44
System	Suspension	**FileLink1**				**Qty**	2
Assembly	Front tie-rod	**FileLink2**		**FileLink1**			
Part	Rod tube	**FileLink3**		**FileLink2**		**Extended Cost**	$ 0.89
P/N Base	07001			**FileLink3**			
Suffix	AA						
Details							

ItemOrder	Material	Use	UnitCost	Size1	Unit1	Size2	Unit2	Area Name	Area	Length	Density	Quantity	Sub Total
10	Tubing, Steel	Tube for tie-rod	$ 2.25	6	mm	7.5	mm		6.36E-05	0.195	7860	1	$ 0.22
												Sub Total	**$ 0.22**

ItemOrder	Process	Use	UnitCost	Unit	Quantity	Multiplier	Mult. Val.	Sub Total
10	Tube cut	Cut to proper length	$ 0.15	cm	1.5			$ 0.23
							Sub Total	**$ 0.23**

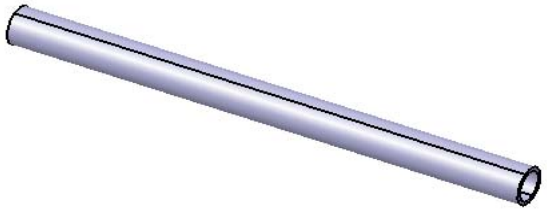

University	Ecole Centrale de Lyon			**Car #**	81	**Part Cost**	$ 2.47
System	Suspension	**FileLink1**				**Qty**	2
Assembly	Front tie-rod	**FileLink2**		**FileLink1**			
Part	Tie rod right-hand insert	**FileLink3**		**FileLink2**		**Extended Cost**	$ 4.94
P/N Base	07002			**FileLink3**			
Suffix	AA						
Details	Insert to attach the rod end on the tie-rod						

ItemOrder	Material	Use	UnitCost	Size1	Unit1	Size2	Unit2	Area Name	Area	Length	Density	Quantity	Sub Total
10	Steel, Mild	Stock material for tie-rod right-hand thread insert	$ 2.25	7	mm			Round area radius 7mm	1.54E-04	0.027	7860	1	$ 0.07
												Sub Total	**$ 0.07**

ItemOrder	Process	Use	UnitCost	Unit	Quantity	Multiplier	Mult. Val.	Sub Total
10	Machining Setup, Install and remove	Setup for tie-rod right-hand thread insert machining and removal	$ 1.30	unit	1			$ 1.30
20	Machining	Outer profile	$ 0.04	cm^3	0.69	Material Steel	3	$ 0.08
30	Tapping holes	Right-hand thread	$ 0.35	hole	1			$ 0.35
40	Machining Setup, Change	Setup for last machining process	$ 0.65	unit	1			$ 0.65
50	Machining	Surfaces for easy torquing	$ 0.04	cm^3	0.11	Material Steel	3	$ 0.01
							Sub Total	**$ 2.40**

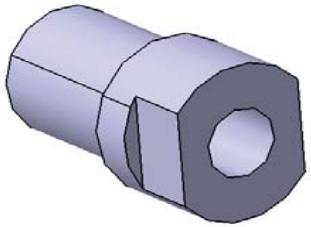

University	Ecole Centrale de Lyon			**Car #**	81	**Part Cost**	$ 2.47
System	Suspension	**FileLink1**				**Qty**	2
Assembly	Front tie-rod	**FileLink2**		**FileLink1**			
Part	Tie rod left-hand insert	**FileLink3**		**FileLink2**		**Extended Cost**	$ 4.94
P/N Base	07003			**FileLink3**			
Suffix	AA						
Details	Insert to attach the rod end on the tie-rod						

ItemOrder	Material	Use	UnitCost	Size1	Unit1	Size2	Unit2	Area Name	Area	Length	Density	Quantity	Sub Total
10	Steel, Mild	Stock material for tie-rod left-hand thread insert	$ 2.25	7	mm			Round area radius 7mm	1.54E-04	0.027	7860	1	$ 0.07
												Sub Total	**$ 0.07**

ItemOrder	Process	Use	UnitCost	Unit	Quantity	Multiplier	Mult. Val.	Sub Total
10	Machining Setup, Install and remove	Setup for tie-rod left-hand thread insert machining and removal	$ 1.30	unit	1			$ 1.30
20	Machining	Outer profile	$ 0.04	cm^3	0.69	Material Steel	3	$ 0.08
30	Tapping holes	Left-hand thread	$ 0.35	hole	1			$ 0.35
40	Machining Setup, Change	Setup for last machining process	$ 0.65	unit	1			$ 0.65
50	Machining	Surfaces for easy torquing	$ 0.04	cm^3	0.11	Material Steel	3	$ 0.01
							Sub Total	**$ 2.40**

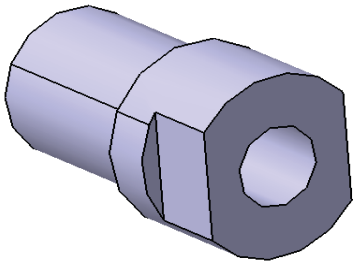

University	Ecole Centrale de Lyon	**Car #**	81	**Asm Cost**	$ 344.08
System	Suspension			**Qty**	2
Assembly	Rear suspension	**FileLink1**			
P/N Base	SU A0008	**FileLink2**		**Extended Cost**	$ 688.16
Suffix	AA	**FileLink3**			
Details	Assembly of the rear suspension				

ItemOrder	Part	Part Cost	Quantity	Sub Total
10	Dampers	$ 305.00	1	$ 305.00
20	Springs	$ 25.00	1	$ 25.00
30	Rear suspenson mount	$ 7.15	1	$ 7.15
			Sub Total	**$ 337.15**

ItemOrder	Material	Use	UnitCost	Size1	Unit1	Size2	Unit2	Area Name	Area	Length	Density	Quantity	Sub Total
10	Paint	Rear suspension mount paint	$ 10.00	0.004	m^2							1	$ 0.04
												Sub Total	**$ 0.04**

ItemOrder	Process	Use	UnitCost	Unit	Quantity	Multiplier	Mult. Val.	Sub Total
10	Weld	Welding the suspension mounts on the frame	$ 0.15	cm	12.48	Repeat 2	2	$ 3.74
20	Aerosol apply	Painting of suspension mount in red	$ 5.25	m^2	0.004			$ 0.02
30	Assemble, 1 kg, Loose	Attaching springs to dampers	$ 0.06	unit	1			$ 0.06
40	Assemble, 1 kg, Loose	Put the damper in place	$ 0.06	unit	1			$ 0.06
50	Ratchet <= 25.4 mm	Bolt damper to suspension mount	$ 0.75	unit	1			$ 0.75
60	Reaction Tool <= 25.4 mm	Thigten the M8 nuts	$ 0.25	unit	1			$ 0.25
70	Assemble, 1 kg, Loose	Put the damper in place	$ 0.06	unit	1			$ 0.06
80	Ratchet <= 25.4 mm	Bolt damper to rocker	$ 0.75	unit	1			$ 0.75
90	Reaction Tool <= 25.4 mm	Thigten the M8 nuts	$ 0.25	unit	1			$ 0.25
							Sub Total	**$ 5.95**

ItemOrder	Fastener	Use	UnitCost	Size1	Unit1	Size2	Unit2	Quantity	Sub Total
10	Bolt, Grade 8.8 (SAE 5)		$ 0.21	8	mm	50	mm	1	$ 0.21
20	Bolt, Grade 8.8 (SAE 5)		$ 0.24	8	mm	55	mm	1	$ 0.24
30	Nut, Grade 8.8 (SAE 5)		$ 0.04	8	mm			2	$ 0.08
40	Washer, Grade 8.8 (SAE 5)		$ 0.01	8	mm			8	$ 0.08
								Sub Total	**$ 0.61**

ItemOrder	Tooling	Use	UnitCost	Unit	Quantity	PVF	FractionIncluded	Sub Total
10	welds-welding Fixture	welding of the mounts the frame	$ 500.00	point	2	3000	1	$ 0.33
							Sub Total	**$ 0.33**

University	Ecole Centrale de Lyon			**Car #**	81	**Part Cost**	$ 305.00
System	Suspension	**FileLink1**				**Qty**	2
Assembly	Rear suspension	**FileLink2**		**FileLink1**			
Part	Dampers	**FileLink3**		**FileLink2**		**Extended Cost**	$ 610.00
P/N Base	SU 08001			**FileLink3**			
Suffix	AA						
Details	Damper, Ohlins TTX 25						

ItemOrder	Material	Use	UnitCost	Size1	Unit1	Size2	Unit2	Area Name	Area	Length	Density	Quantity	Sub Total
10	Damper, Ohlins TTX 25	Dampers	$ 305.00									1	$ 305.00
												Sub Total	**$ 305.00**

University	Ecole Centrale de Lyon			**Car #**	81	**Part Cost**	$ 25.00
System	Suspension	**FileLink1**				**Qty**	2
Assembly	Rear suspension	**FileLink2**		**FileLink1**			
Part	Springs	**FileLink3**		**FileLink2**		**Extended Cost**	$ 50.00
P/N Base	SU 08002			**FileLink3**			
Suffix	AA						
Details							

ItemOrder	Material	Use	UnitCost	Size1	Unit1	Size2	Unit2	Area Name	Area	Length	Density	Quantity	Sub Total
10	Suspension Springs, Coil Spring, Steel	Spring for the dampers	$ 25.00									1	$ 25.00
												Sub Total	**$ 25.00**

University	Ecole Centrale de Lyon			**Car #**	81	**Part Cost**	$ 7.15
System	Suspension	**FileLink1**				**Qty**	2
Assembly	Rear suspension	**FileLink2**		**FileLink1**			
Part	Suspension mount	**FileLink3**		**FileLink2**		**Extended Cost**	$ 14.30
P/N Base	SU 08003			**FileLink3**			
Suffix	AA						
Details							

ItemOrder	Material	Use	UnitCost	Size1	Unit1	Size2	Unit2	Area Name	Area	Length	Density	Quantity	Sub Total
10	Steel, Mild	Stock material for the suspension mount	$ 2.25	41.1	mm	29.88	mm	Rectangular area 41,1mm x 29,99mm	1.23E-03	0.026	7860	1	$ 0.56
												Sub Total	**$ 0.56**

ItemOrder	Process	Use	UnitCost	Unit	Quantity	Multiplier	Mult. Val.	Sub Total
10	Machining Setup, Install and remove	Install and remove part from laser machine	$ 1.30	unit	1			$ 1.30
20	Machining	Main shape contouring	$ 0.04	cm^3	14.8	Material Steel	3	$ 1.78
30	Drilled holes < 25.4 mm dia.	Hole for the pivot	$ 0.35	hole	1	Machine - Hole Length >= 4D	1.5	$ 0.53
40	Machining Setup Change		$ 0.65	unit	1			$ 0.65
50	Machining	Central groove machining	$ 0.04	cm^3	5.20	Material Steel	3	$ 0.62
60	Machining Setup Change		$ 0.65	unit	1			$ 0.65
70	Machining	First tube cavity	$ 0.04	cm^3	3.1	Material Steel	3	$ 0.37
80	Machining Setup Change		$ 0.65	unit	1			$ 0.65
90	Machining	Second tube cavity	$ 0.04	cm^3	0.34	Material Steel	3	$ 0.04
							Sub Total	**$ 6.59**

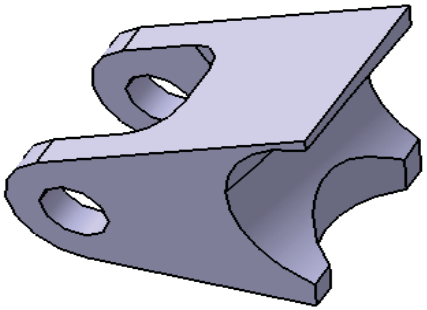

University	Ecole Centrale de Lyon	**Car #**	81	**Asm Cost**	$ 33.25
System	Suspension			**Qty**	2
Assembly	Rear Rocker	**FileLink1**			
P/N Base	A0009	**FileLink2**		**Extended Cost**	$ 66.50
Suffix	AA	**FileLink3**			
Details	Assembly of the rear rocker				

ItemOrder	Part	Part Cost	Quantity	Sub Total
10	Sheets metal of the Rocker	$ 5.42	1	$ 5.42
20	Cylinder	$ 1.98	1	$ 1.98
30	Bushing	$ 2.65	2	$ 5.30
40	Rocker mount	$ 13.20	1	$ 13.20
			Sub Total	**$ 25.90**

ItemOrder	Process	Use	UnitCost	Unit	Quantity	Multiplier	Mult. Val.	Sub Total
10	Weld	Welding of the rocker mounts on the frame	$ 0.15	cm	15.61			$ 2.34
20	Aerosol apply	Painting of the rocker mount in red	$ 5.25	m^2	0.009			$ 0.05
30	Weld	Welding of the cylinder on the two sheets metal of the rocker	$ 0.15	cm	6.28	Repeat 2	2	$ 1.88
40	Brush Apply	Varnishing of the rocker	$ 0.02	cm^2	0.016			$ 0.00
50	Assemble, 1 kg, Interference	Insert 2 bronze bushings into the rocker	$ 0.19	unit	2			$ 0.38
60	Assemble, 1 kg, Loose	Put the rocker in place	$ 0.06	unit	1.00			$ 0.06
70	Ratchet <= 25.4 mm	Bolt rocker to rocker mount	$ 0.75	unit	1.00			$ 0.75
80	Reaction Tool <= 25.4 mm	Thigten the M8 nuts	$ 0.25	unit	1.00			$ 0.25
							Sub Total	**$ 5.71**

ItemOrder	Fastener	Use	UnitCost	Size1	Unit1	Size2	Unit2	Quantity	Sub Total
10	Nut, Grade 8.8 (SAE 5)		$ 0.04	8	mm			1	$ 0.04
20	Washer, Grade 8.8 (SAE 5)		$ 0.01	8	mm			1	$ 0.01
30	Bolt, Grade 8.8 (SAE 5)	Hexagon socket headless screw	$ 0.26	8	mm	60	mm	1	$ 0.26
								Sub Total	**$ 0.31**

ItemOrder	Tooling	Use	UnitCost	Unit	Quantity	PVF	FractionInclu	Sub Total
10	Welds-welding Fixture	Welding of the cylinder on the steel sheet	$ 500.00	point	8	3000	1	$ 1.33
							Sub Total	**$ 1.33**

University	Ecole Centrale de Lyon			**Car #**	81	**Part Cost**	$ 5.42
System	Suspension	**FileLink1**				**Qty**	2
Assembly	Rear rocker	**FileLink2**		**FileLink1**			
Part	Sheets metal of the rocker	**FileLink3**		**FileLink2**		**Extended Cost**	$ 10.83
P/N Base	09001			**FileLink3**			
Suffix	AA						
Details							

ItemOrder	Material	Use	UnitCost	Size1	Unit1	Size2	Unit2	Area Name	Area	Length	Density	Quantity	Sub Total
10	Steel, Mild	Sheet metal for the rocker	$ 2.25	108	mm	36	mm	Rectangular area 108mm x 36mm	3.88E-03	0.006	7860	2	$ 0.82
												Sub Total	**$ 0.82**

ItemOrder	Process	Use	UnitCost	Unit	Quantity	Multiplier	Mult. Val.	Sub Total
10	Machining Setup, Install and remove	Install and remove parts from laser machine	$ 1.30	unit	1	Repeat 2	2	$ 2.60
20	laser cut	Cut out the outline	$ 0.01	cm	33.21	Repeat 2 and Material Steel	6	$ 1.99
							Sub Total	**$ 4.59**

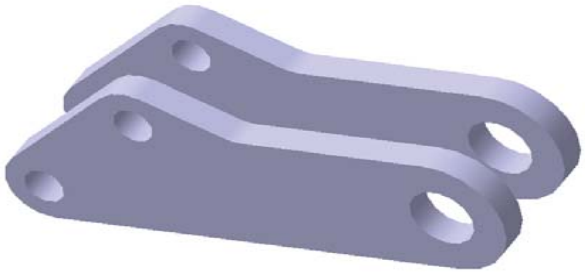

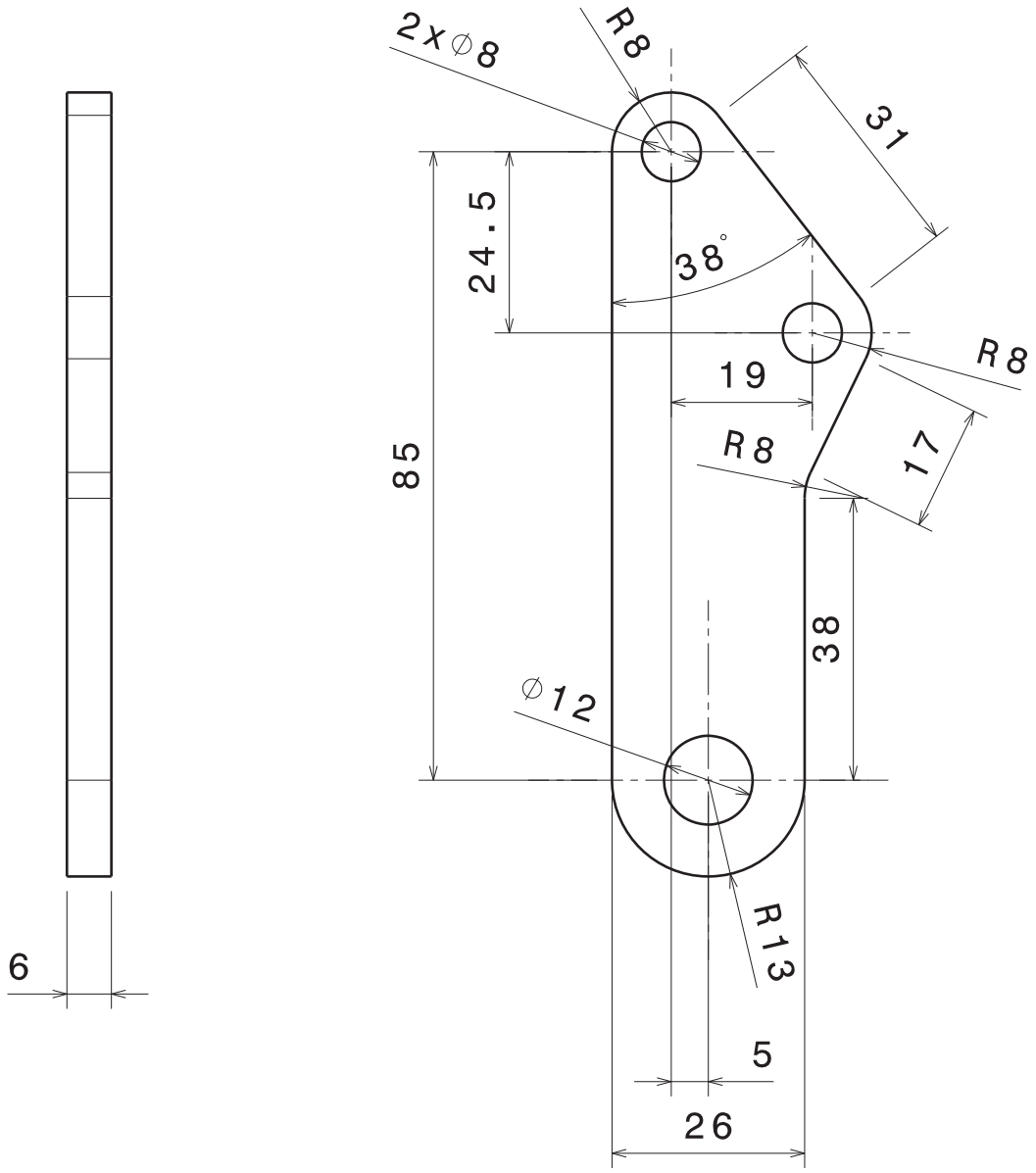

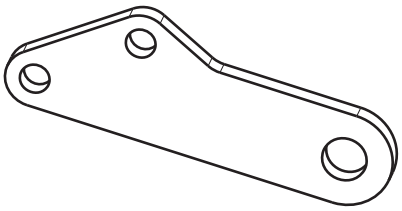

Tolérances générales : 2768-mK

Taille A4		Ecurie Piston Sport Auto	
Dessiné par Jordan Rosso	Date 03/12/2013	Désignation Basculeur arrière	
Coordonnées 06 31 62 69 55 jordan.rosso@ecl2015.ec-lyon.fr		Quantité 4	Matériau Acier S235	Version v1.0
Date de livraison souhaitée 14/01/2014		Echelle 1:1	Numéro du plan 14M066	Feuille 1/1

University	Ecole Centrale de Lyon			**Car #**	81	**Part Cost**	$ 1.98
System	Suspension	**FileLink1**				**Qty**	2
Assembly	Rear rocker	**FileLink2**		**FileLink1**			
Part	Cylinder	**FileLink3**		**FileLink2**		**Extended Cost**	$ 3.97
P/N Base	09002			**FileLink3**			
Suffix	AA						
Details	Cylinder to assure the pivot linkage						

ItemOrder	Material	Use	UnitCost	Size1	Unit1	Size2	Unit2	Area Name	Area	Length	Density	Quantity	Sub Total
10	Steel, Mild	Stock material for cylinder	$ 2.25	11	mm			Round Area radius 11mm	3.80E-04	1.77E-02	7860	1	$ 0.12
												Sub Total	**$ 0.12**

ItemOrder	Process	Use	UnitCost	Unit	Quantity	Multiplier	Mult. Val.	Sub Total
10	Machining Setup, Install and remove	Install and remove parts	$ 1.30	unit	1			$ 1.30
20	Machining	Outer profile	$ 0.04	cm^3	1.80	Material steel	3	$ 0.22
30	Drilled holes < 25.4 mm dia.	Hole for the pivot	$ 0.35	hole	1			$ 0.35
							Sub Total	**$ 1.87**

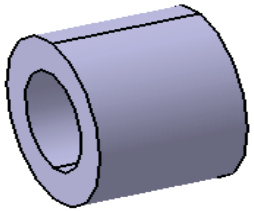

University	Ecole Centrale de Lyon			**Car #**	81	**Part Cost**	$ 1.32
System	Suspension	**FileLink1**				**Qty**	4
Assembly	Rear rocker	**FileLink2**		**FileLink1**			
Part	Bushing	**FileLink3**		**FileLink2**		**Extended Cost**	$ 5.28
P/N Base	09003			**FileLink3**			
Suffix	AA						
Details							

ItemOrder	Material	Use	UnitCost	Size1	Unit1	Size2	Unit2	Area Name	Area	Length	Density	Quantity	Sub Total
10	Bronze (per kg)	Stock material for bushings	$ 2.20	5	mm			Round area, radius 5mm	7.85E-05	0.01	6400	1	$ 0.01
												Sub Total	**$ 0.01**

ItemOrder	Process	Use	UnitCost	Unit	Quantity	Multiplier	Mult. Val.	Sub Total
10	Machining Setup, Install and remove	Setup machining (turning) and removal	$ 1.30	unit	1			$ 1.30
20	Machining	Machining of the bushing (turning)	$ 0.04	cm^3	0.26	Material Bronze	1.33	$ 0.01
							Sub Total	**$ 1.31**

University	Ecole Centrale de Lyon			**Car #**	81	**Part Cost**	$ 13.20
System	Suspension	**FileLink1**				**Qty**	2
Assembly	Rear rocker	**FileLink2**		**FileLink1**			
Part	Rocker mount	**FileLink3**		**FileLink2**		**Extended Cost**	$ 26.41
P/N Base	09004			**FileLink3**			
Suffix	AA						
Details							

ItemOrder	Material	Use	UnitCost	Size1	Unit1	Size2	Unit2	Area Name	Area	Length	Density	Quantity	Sub Total
10	Steel, Mild	Stock material for the rocker mount	$ 2.25	32	mm	58.7	mm	Rectangular area 32mm x 58,7mm	1.88E-03	4.17E-02	7860	1	$ 1.39
												Sub Total	**$ 1.39**

ItemOrder	Process	Use	UnitCost	Unit	Quantity	Multiplier	Mult. Val.	Sub Total
10	Machining Setup, Install and remove	Install and remove part from laser machine	$ 1.30	unit	1			$ 1.30
20	Machining	Main shape contouring	$ 0.04	cm^3	30.72	Material Steel	3	$ 3.00
30	Drilled holes < 25.4 mm dia.	Hole for the pivot	$ 0.35	hole	1	Machine - Hole Length >= 4D	1.5	$ 0.53
40	Machining Setup Change		$ 0.65	unit	1			$ 0.65
50	Machining	Central groove machining	$ 0.04	cm^3	27.32	Material Steel	3	$ 3.28
60	Machining Setup Change		$ 0.65	unit	1			$ 0.65
70	Machining	First tube cavity	$ 0.04	cm^3	2.22	Material Steel	3	$ 0.27
80	Machining Setup Change		$ 0.65	unit	1			$ 0.65
90	Machining	Second tube cavity	$ 0.04	cm^3	4.15	Material Steel	3	$ 0.50
100	Machining Setup Change		$ 0.65	unit	1			$ 0.65
110	Drilled holes < 25.4 mm dia.	Hole for material removal	$ 0.35	hole	1			$ 0.35
							Sub Total	**$ 11.82**

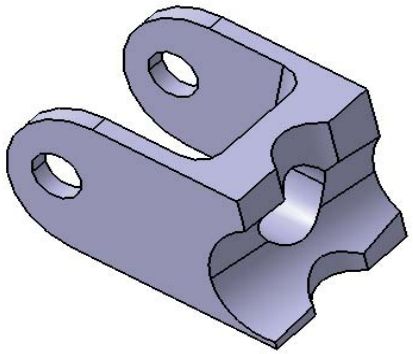

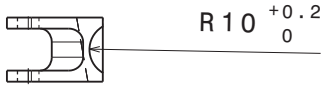

Vue de dessous
Echelle : 1:2

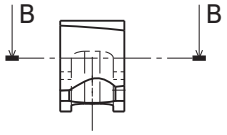

Vue de droite
Echelle : 1:2

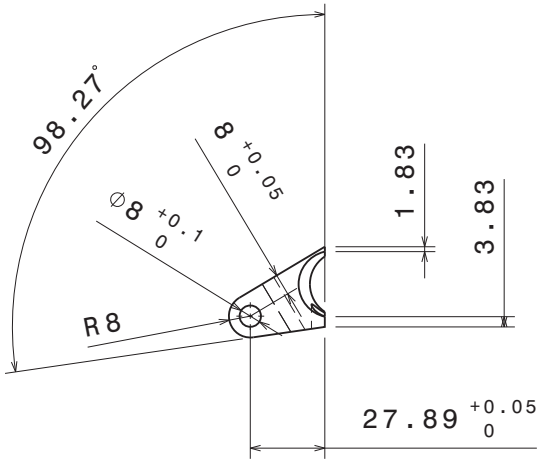

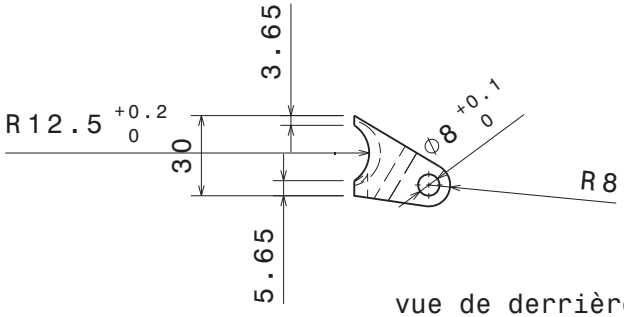

vue de derrière

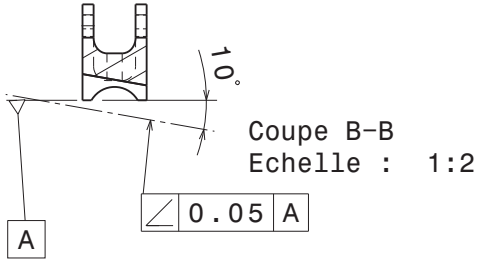

Coupe B-B
Echelle : 1:2

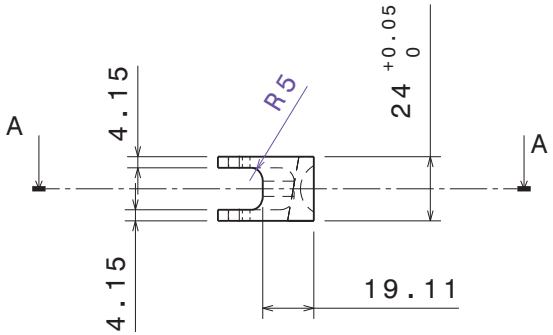

Vue de dessus
Echelle : 1:2

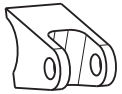

Vue isométrique
Echelle : 1:2

Casser les angles vifs

Tolérances générales ISO 2768-mk

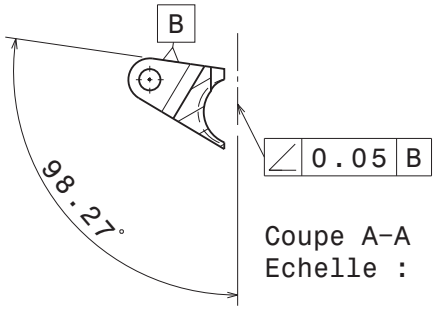

Coupe A-A
Echelle : 1:2

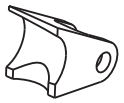

Vue isométrique
Echelle : 1:2

Taille A3		Ecurie Piston Sport Auto
Dessiné par Aurélien Poissonnier	Date 26/11/2013	Désignation Chape amortisseur arrière gauche
Coordonnées 06 98 44 59 45 aurélien.poissonnier@ecl2015.ec-lyon.fr		Quantité 1 / Matériau Acier S235 / Version v1.0
Vérifié par	Date	Echelle 1:2 / Numéro du plan 14 B003 / Feuille 1/1

University	Ecole Centrale de Lyon	**Car #**	81	**Asm Cost**	$ 18.82
System	Suspension			**Qty**	2
Assembly	Rear tie-rod	**FileLink1**			
P/N Base	A0010	**FileLink2**		**Extended Cost**	$ 37.63
Suffix	AA	**FileLink3**			
Details	Assembly of the Front tie-od which actuates the suspensions				

ItemOrder	Part	Part Cost	Quantity	Sub Total
10	Rod tube	$ 0.44	1	$ 0.44
20	Tie rod right hand insert	$ 2.47	1	$ 2.47
30	Tie rod left hand insert	$ 2.47	1	$ 2.47
			Sub Total	**$ 5.38**

ItemOrder	Material	Use	UnitCost	Size1	Unit1	Size2	Unit2	Area Name	Area	Length	Density	Quantity	Sub Total
10	Rod End, Industrial	Right-hand rod End for tie-rod extremities	$ 2.50	8	mm							1	$ 2.50
20	Rod End, Industrial	Left-hand rod End for tie-rod extremities	$ 2.50	8	mm							1	$ 2.50
												Sub Total	**$ 5.00**

ItemOrder	Process	Use	UnitCost	Unit	Quantity	Multiplier	Mult. Val.	Sub Total
10	Weld	Welding of inserts on tube	$ 0.15	cm	4.71	repeat 2	2	$ 1.41
20	Aerosol apply	Painting of tie-rod in red	$ 5.25	m^2	0.009			$ 0.05
30	Wrench <= 25.4 mm	Put the nuts on the rod ends	$ 1.50	unit	2			$ 3.00
40	Reaction Tool <= 25.4 mm	Tighten the M8 nut to lock the rod end in the insert	$ 0.25	unit	2			$ 0.50
50	Assemble, 1 kg, Loose	Put the tie-rod in place	$ 0.06	unit	1			$ 0.06
60	Ratchet <= 25.4 mm	Bolt tie-rod to upper front double insert	$ 0.75	unit	1			$ 0.75
70	Reaction Tool <= 25.4 mm	Thigten the M8 nuts	$ 0.25	unit	1			$ 0.25
80	Assemble, 1 kg, Loose	Put the tie rod in place	$ 0.06	unit	1			$ 0.06
90	Ratchet <= 25.4 mm	Bolt tie rod to rocker	$ 0.75	unit	1			$ 0.75
100	Reaction Tool <= 25.4 mm	Thigten the M8 nuts	$ 0.25	unit	1			$ 0.25
							Sub Total	**$ 7.08**

ItemOrder	Fastener	Use	UnitCost	Size1	Unit1	Size2	Unit2	Quantity	Sub Total
10	Nut, Grade 8.8 (SAE 5)	Left-hand thread	$ 0.04	8	mm			1	$ 0.04
20	Nut, Grade 8.8 (SAE 5)	right-hand thread	$ 0.04	8	mm			1	$ 0.04
30	Bolt, Grade 8.8 (SAE 5)	Bolt tie-rod to upper front double insert	$ 0.21	8	mm	50	mm	1	$ 0.21
40	Bolt, Grade 8.8 (SAE 5)	Bolt tie rod to rocker	$ 0.24	8	mm	55	mm	1	$ 0.24
50	Nut, Grade 8.8 (SAE 5)		$ 0.04	8	mm			2	$ 0.08
60	Washer, Grade 8.8 (SAE 5)		$ 0.01	8	mm			8	$ 0.08
								Sub Total	**$ 0.69**

ItemOrder	Tooling	Use	UnitCost	Unit	Quantity	PVF	FractionIncluded	Sub Total
10	Welds-Welding Fixture	Steel mounts welding on frame	$ 500.00	point	4	3000	1	$ 0.67
							Sub Total	**$ 0.67**

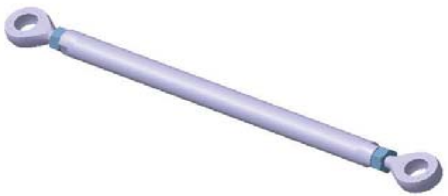

University	Ecole Centrale de Lyon			**Car #**	81	**Part Cost**	$ 0.44
System	Suspension	**FileLink1**				**Qty**	2
Assembly	Rear tie-rod	**FileLink2**		**FileLink1**			
Part	Rod tube	**FileLink3**		**FileLink2**		**Extended Cost**	$ 0.89
P/N Base	10001			**FileLink3**			
Suffix	AA						
Details							

ItemOrder	Material	Use	UnitCost	Size1	Unit1	Size2	Unit2	Area Name	Area	Length	Density	Quantity	Sub Total
10	Tubing, Steel	Tube for tie-rod	$ 2.25	6	mm	7.5	mm		6.36E-05	0.20	7860	1	$ 0.22
												Sub Total	**$ 0.22**

ItemOrder	Process	Use	UnitCost	Unit	Quantity	Multiplier	Mult. Val.	Sub Total
10	Tube cut	Cut to proper length	$ 0.15	cm	1.5			$ 0.23
							Sub Total	**$ 0.23**

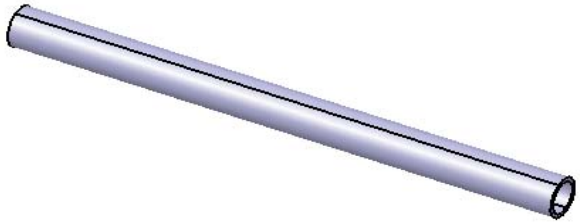

University	Ecole Centrale de Lyon			**Car #**	81	**Part Cost**	$ 2.47
System	Suspension	**FileLink1**				**Qty**	2
Assembly	Rear tie-rod	**FileLink2**		**FileLink1**			
Part	Tie rod right-hand insert	**FileLink3**		**FileLink2**		**Extended Cost**	$ 4.94
P/N Base	10002			**FileLink3**			
Suffix	AA						
Details	Insert to attach the rod end on the tie-rod						

ItemOrder	Material	Use	UnitCost	Size1	Unit1	Size2	Unit2	Area Name	Area	Length	Density	Quantity	Sub Total
10	Steel, Mild	Stock material for tie-rod right-hand thread insert	$ 2.25	7	mm			Round area radius 7mm	1.54E-04	0.027	7860	1	$ 0.07
												Sub Total	**$ 0.07**

ItemOrder	Process	Use	UnitCost	Unit	Quantity	Multiplier	Mult. Val.	Sub Total
10	Machining Setup, Install and remove	Setup for tie-rod right-hand thread insert machining and removal	$ 1.30	unit	1			$ 1.30
20	Machining	Outer profile	$ 0.04	cm^3	0.69	Material Steel	3	$ 0.08
30	Tapping holes	Right-hand thread	$ 0.35	hole	1			$ 0.35
40	Machining Setup, Change	Setup for last machining process	$ 0.65	unit	1			$ 0.65
50	Machining	Surfaces for easy torquing	$ 0.04	cm^3	0.11	Material Steel	3	$ 0.01
							Sub Total	**$ 2.40**

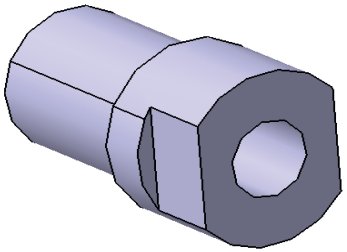

University	Ecole Centrale de Lyon			**Car #**	81	**Part Cost**	$ 2.47
System	Suspension	**FileLink1**				**Qty**	2
Assembly	Rear tie-rod	**FileLink2**		**FileLink1**			
Part	Tie rod left-hand insert	**FileLink3**		**FileLink2**		**Extended Cost**	$ 4.94
P/N Base	10003			**FileLink3**			
Suffix	AA						
Details	Insert to attach the rod end on the tie-rod						

ItemOrder	Material	Use	UnitCost	Size1	Unit1	Size2	Unit2	Area Name	Area	Length	Density	Quantity	Sub Total
10	Steel, Mild	Stock material for tie-rod left-hand thread insert	$ 2.25	7	mm			Round area radius 7mm	1.54E-04	0.027	7860	1	$ 0.07
												Sub Total	**$ 0.07**

ItemOrder	Process	Use	UnitCost	Unit	Quantity	Multiplier	Mult. Val.	Sub Total
10	Machining Setup, Install and remove	Setup for tie-rod left-hand thread insert machining and removal	$ 1.30	unit	1			$ 1.30
20	Machining	Outer profile	$ 0.04	cm^3	0.69	Material Steel	3	$ 0.08
30	Tapping holes	Left-hand thread	$ 0.35	hole	1			$ 0.35
40	Machining Setup, Change	Setup for last machining process	$ 0.65	unit	1			$ 0.65
50	Machining	Surfaces for easy torquing	$ 0.04	cm^3	0.11	Material Steel	3	$ 0.01
							Sub Total	**$ 2.40**

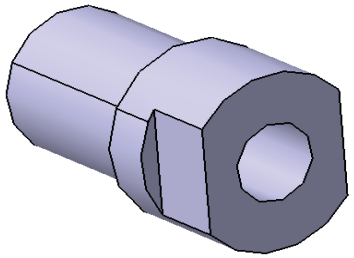

University	Ecole Centrale de Lyon	**Car #**	81	**Asm Cost**	$	189.36
System	Suspension			**Qty**		2
Assembly	Front Uprights Assembly	**FileLink1**				
P/N Base	A0011	**FileLink2**		**Extended Cost**	$	378.71
Suffix	AA	**FileLink3**				
Details						

ItemOrder	Part	Part Cost	Quantity	Sub Total
10	Front Uprights	$ 161.71	1	$ 161.71
20	Steering Tab	$ 5.74	1	$ 5.74
30	Upper Tab	$ 5.88	1	$ 5.88
40	Camber adjustment shims	$ 1.85	1	$ 1.85
50	Lower Spacer	$ 1.33	2	$ 2.67
60	Upper Spacer	$ 1.37	2	$ 2.74
			Sub Total	**$ 180.60**

ItemOrder	Process	Use	UnitCost	Unit	Quantity	Multiplier	Mult. Val.	Sub Total
10	Assemble, 3 kg, Interference	Assemble with front hub	$ 0.56	Unit	1		1	$ 0.56
20	Assemble, 1 kg, Line-on-Line	Steering tab assemble	$ 0.13	Unit	1		1	$ 0.13
30	Ratchet <= 25.4 mm	Bolt steering tab and upright	$ 0.75	Unit	2		1	$ 1.50
40	Reaction Tool <= 25.4 mm	Bolt steering tab and upright	$ 0.25	Unit	2		1	$ 0.50
50	Assemble, 1 kg, Line-on-Line	Camber adjustment shims assemble	$ 0.13	Unit	1		1	$ 0.13
60	Assemble, 1 kg, Line-on-Line	Upper Tab assemble	$ 0.13	Unit	1		1	$ 0.13
70	Ratchet <= 25.4 mm	Bolt upper tab and upright	$ 0.75	Unit	2		1	$ 1.50
80	Reaction Tool <= 25.4 mm	Bolt upper tab and upright	$ 0.25	Unit	2		1	$ 0.50
90	Assemble, 1 kg, Loose	Upper and Lower spacers assemble	$ 0.06	Unit	4		1	$ 0.24
100	Assemble, 5 kg, Line-on-Line	Assembe with the frame	$ 0.63	Unit	1		1	$ 0.63
110	Ratchet <= 25.4 mm	Bolt upright with Front A arms	$ 0.75	Unit	2		1	$ 1.50
120	Reaction Tool <= 25.4 mm	Bolt upright with Front A arms	$ 0.25	Unit	2		1	$ 0.50
							Sub Total	**7.82**

ItemOrder	Fastener	Use	UnitCost	Size1	Unit1	Size2	Unit2	Quantity	Sub Total
10	Bolt, Grade 8.8 (SAE 5)	Upper tab fixing bolts	$ 0.12	6	mm	50	mm	2	$ 0.24
20	Bolt, Grade 8.8 (SAE 5)	Steering tab fixing bolts	$ 0.07	6	mm	30	mm	2	$ 0.14
30	Bolt, Grade 8.8 (SAE 5)	Upright and A arms fixing bolts	$ 0.14	8	mm	35	mm	2	$ 0.28
40	Nut, Grade 8.8 (SAE 5)	Upper tab and steering tab nuts	$ 0.03	6	mm			4	$ 0.12
50	Nut, Grade 8.8 (SAE 5)	Upright and A arms nuts	$ 0.04	8	mm			2	$ 0.08
60	Washer, Grade 8.8 (SAE 5)	Upper tab and steering tab washers	$ 0.01	6	mm			4	$ 0.04
70	Washer, Grade 8.8 (SAE 5)	Upright and A arms washers	$ 0.01	8	mm			4	$ 0.04
								Sub Total	**$ 0.94**

University	Ecole Centrale de Lyon			**Car #**	81	**Part Cost**	$ 161.71
System	Suspension	**FileLink1**				**Qty**	2
Assembly	Front Uprights Assembly	**FileLink2**		**FileLink1**			
Part	Front Uprights	**FileLink3**		**FileLink2**		**Extended Cost**	$ 323.42
P/N Base	11001			**FileLink3**			
Suffix	AA						
Details							

ItemOrder	Material	Use	UnitCost	Size1	Unit1	Size2	Unit2	Area Name	Area	Length	Density	Quantity	Sub Total
10	Aluminum, Premium (per kg)	Front Uprights	$ 4.20	9.37	kg			Rectangular area 265 x 145 mm	3.84E-02	0.09	2 710.00	1	$ 39.36
												Sub Total	**$ 39.36**

ItemOrder	Process	Use	UnitCost	Unit	Quantity	Multiplier	Mult. Val.	Sub Total
10	Machining Setup, Install and remove		$ 1.30	Unit	1			$ 1.30
20	Machining	Material removal - outer profile and slot	$ 0.04	cm^3	2560	Material - Aluminum	1	$ 102.40
30	Machining Setup, Change		$ 0.65		1			$ 0.65
40	Machining	Stock removal	$ 0.04	cm^3	450	Material - Aluminum	1	$ 18.00
							Sub Total	**$ 122.35**

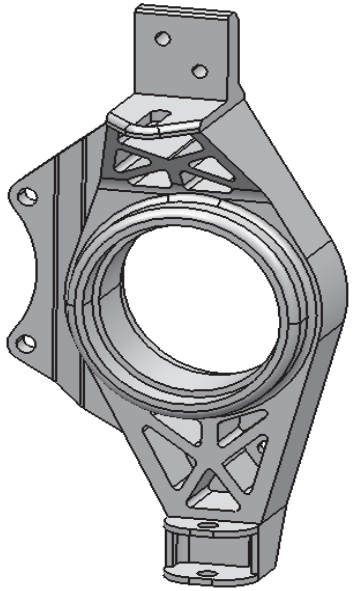

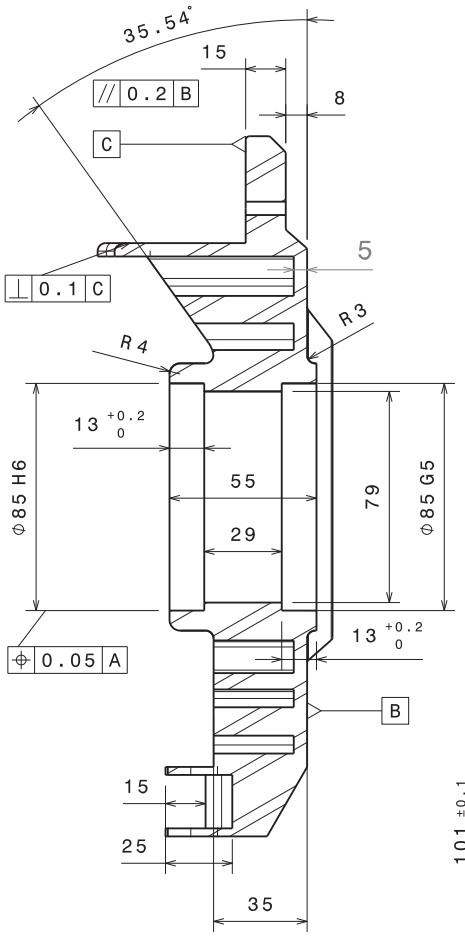

Coupe A-A
Echelle : 1:2

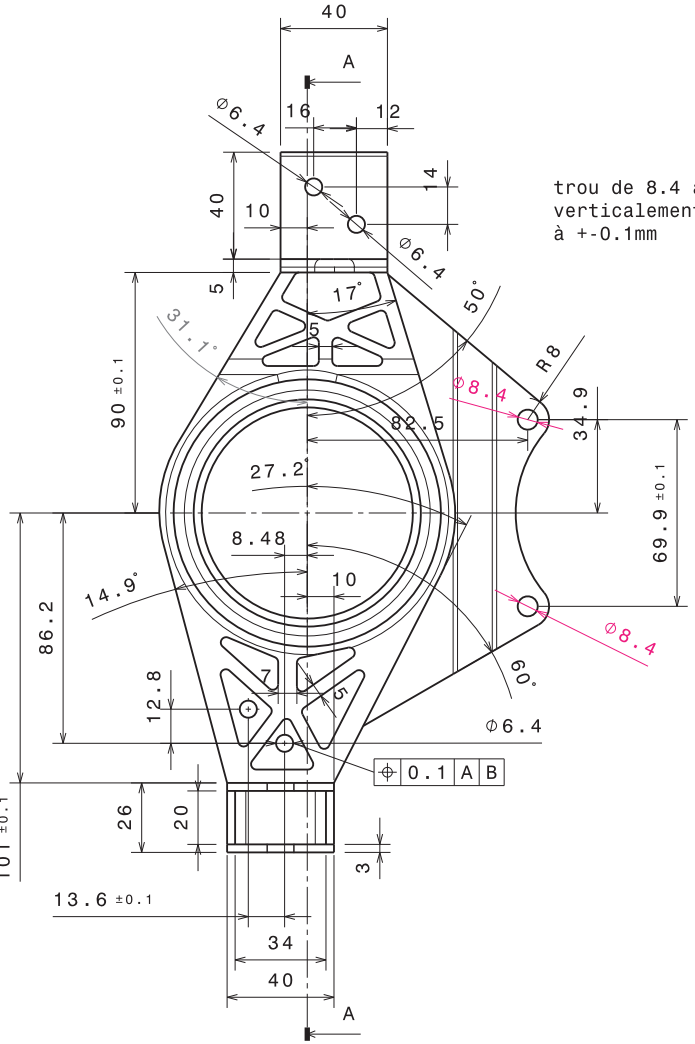

trou de 8.4 aligné
verticalement au premier
à +-0.1mm

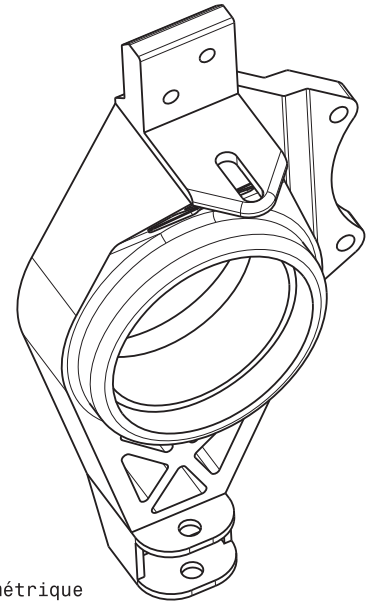

Vue isométrique
Echelle : 1:2

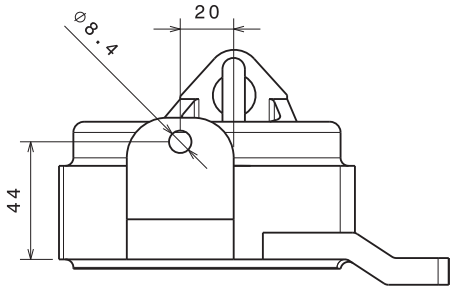

PLANS A VERIFIER AVEC M. PIATON, SUSCEPTIBLE D'EVOLUER

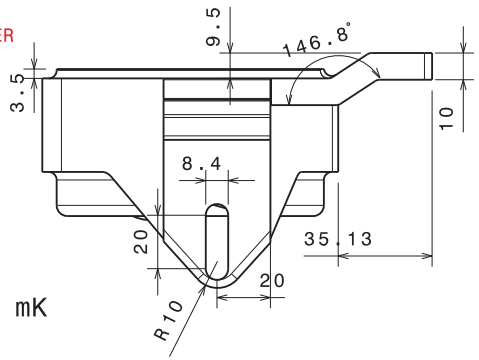

Tolérances générales ISO 2768 - mK

Taille A3		Ecurie Piston Sport Auto
Dessiné par: Pierre-Olivier LE MAREC	Date: 03/12/2013	Désignation: porte moyeu avant droit
Coordonnées: 0621106190, pierre-olivier.le-marec@ecl2015.ec-lyon.fr		Quantité: 1 / Matériau: Aluminium 7075 / Version: 0.9
Date de livraison souhaitée: XXX		Echelle 1:2 / Numéro du plan: 14B043 / Feuille 1/1

University	Ecole Centrale de Lyon			**Car #**	81	**Part Cost**	$ 5.74
System	Suspension	**FileLink1**				**Qty**	2
Assembly	Front Uprights Assembly	**FileLink2**		**FileLink1**			
Part	Steering tab	**FileLink3**		**FileLink2**		**Extended Cost**	$ 11.48
P/N Base	11002			**FileLink3**			
Suffix	AA						
Details							

ItemOrder	Material	Use	UnitCost	Size1	Unit1	Size2	Unit2	Area Name	Area	Length	Density	Quantity	Sub Total
10	Aluminum, Normal (per kg)	Steering tab	$ 4.20	0.18	kg			Rectangular area 82 x 29 mm	2.38E-03	0.03	2 710.00	1	$ 0.76
												Sub Total	**$ 0.76**

ItemOrder	Process	Use	UnitCost	Unit	Quantity	Multiplier	Mult. Val.	Sub Total
10	Machining Setup, Install and remove		$ 1.30	Unit	1			$ 1.30
20	Machining	Material removal - outer profile and slot	$ 0.04	cm^3	52.4	Material - Aluminum	1	$ 2.10
30	Machining Setup, Change		$ 0.65	Unit	1			$ 0.65
40	Machining	Material removal - lateral side	$ 0.04	cm^3	2.4	Material - Aluminum	1	$ 0.10
50	Machining Setup, Change		$ 0.65	Unit	1			$ 0.65
60	Machining	Stock removal	$ 0.04	cm^3	4.76	Material - Aluminum	1	$ 0.19
							Sub Total	**$ 4.98**

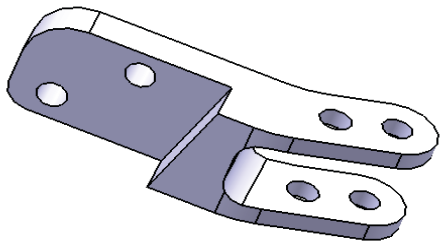

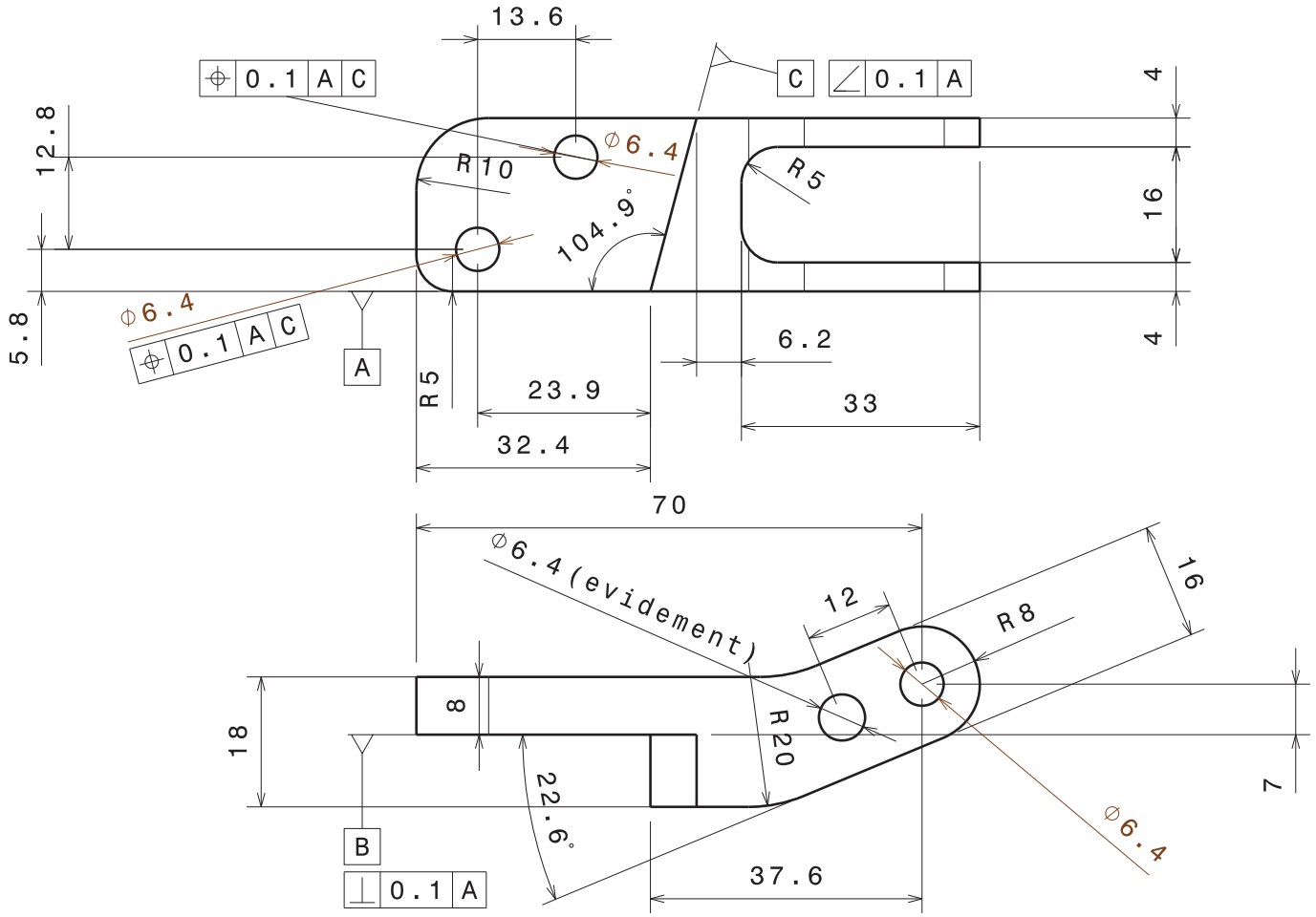

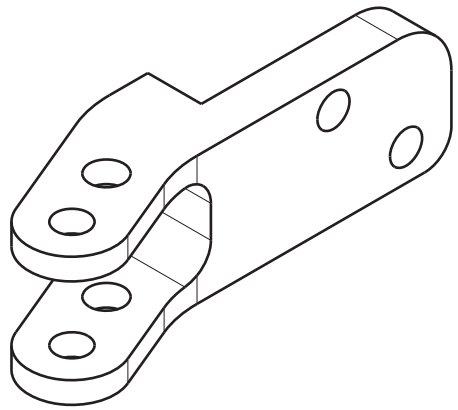

Taille A4		Ecurie Piston Sport Auto
Dessiné par Pierre-Olivier LE MAREC	Date 25/11/2013	Désignation chape bielette de direction (gauche+droite)
Coordonnées 0621106190 pierre-olivier.le-marec@ecl2015.ec-lyon.fr		Quantité 1+1 / Matériau Aluminium 2017 / Version XXX
Vérifié par	Date	Echelle 1:1 / Numéro du plan 14B049/14B050 / Feuille 1/1

University	Ecole Centrale de Lyon			**Car #**	81	**Part Cost**	$ 5.88
System	Suspension	**FileLink1**				**Qty**	2
Assembly	Front Uprights Assembly	**FileLink2**		**FileLink1**			
Part	Upper tab	**FileLink3**		**FileLink2**		**Extended Cost**	$ 11.77
P/N Base	11003			**FileLink3**			
Suffix	AA						
Details							

ItemOrder	Material	Use	UnitCost	Size1	Unit1	Size2	Unit2	Area Name	Area	Length	Density	Quantity	Sub Total
10	Aluminum, Normal (per kg)	Upper tab	$ 4.20	0.21	kg			Rectangular area 40 x 44 mm	1.76E-03	0.044	2 710.00	1	$ 0.88
												Sub Total	**$ 0.88**

ItemOrder	Process	Use	UnitCost	Unit	Quantity	Multiplier	Mult. Val.	Sub Total
10	Machining Setup, Install and remove		$ 1.30	Unit	1			$ 1.30
20	Machining	Material removal - outer profile and slot	$ 0.04	cm^3	33.9	Material - Aluminum	1	$ 1.36
30	Machining Setup, Change		$ 0.65	Unit	1			$ 0.65
40	Machining	Stock removal	$ 0.04	cm^3	3.87	Material - Aluminum	1	$ 0.15
50	Machining Setup, Change		$ 0.65	Unit	1			$ 0.65
60	Machining	Material removal - lateral side	$ 0.04	cm^3	22.3	Material - Aluminum	1	$ 0.89
							Sub Total	**$ 5.00**

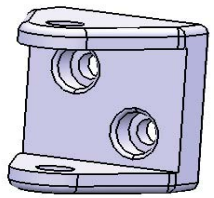

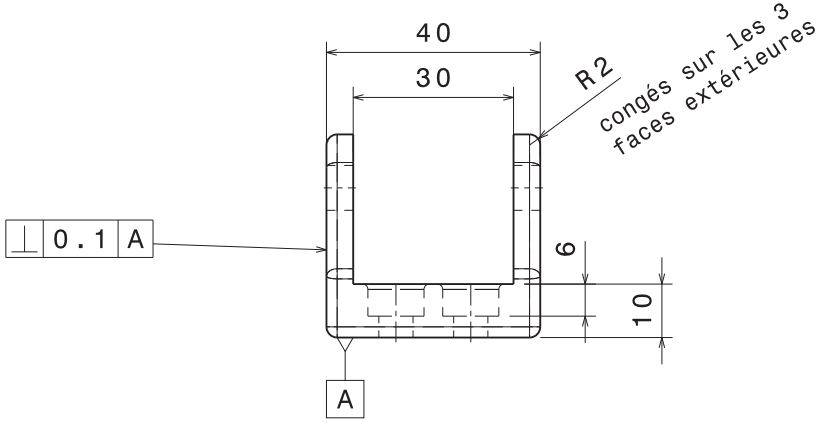

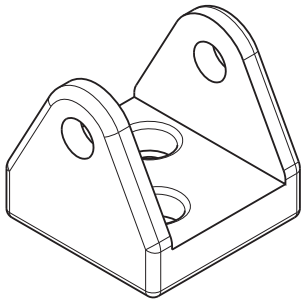

Vue isométrique
Echelle : 1:1

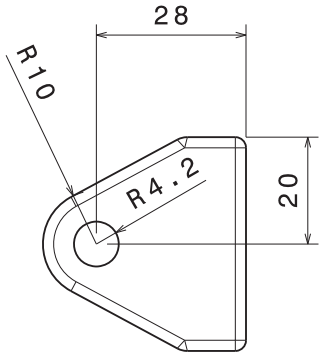

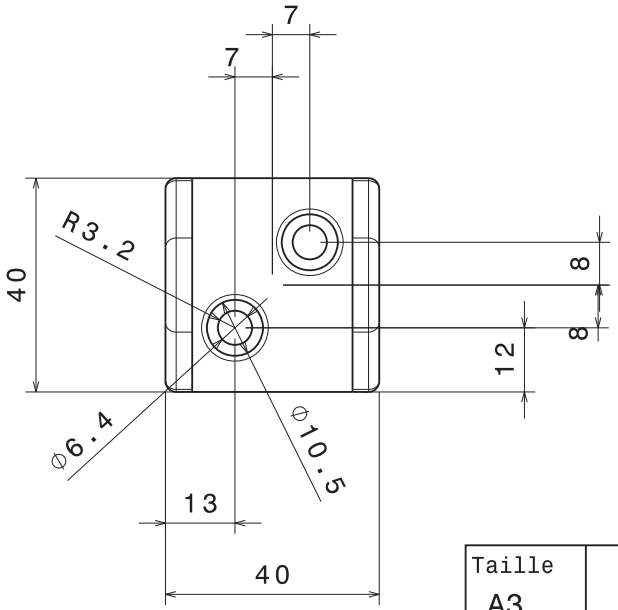

tolérances générales ISO 2768 - mK

TAILLE DU BRUT : 38 mm x 40 mm x 40 mm

Taille A3		Ecurie Piston Sport Auto
Dessiné par Pierre-Olivier LE MAREC	Date 25/11/2013	Désignation chape sup porte moyeu
Coordonnées 0621106190 pierre-olivier.le-marec@ecl2015.ec-lyon.fr		Quantité 8 / Matériau Aluminium 2017 / Version XXX
Vérifié par	Date	Echelle 1:1 / Numéro du plan 14 B048 / Feuille 1/1

University	Ecole Centrale de Lyon			**Car #**	81	**Part Cost**	$ 1.85
System	Suspension	**FileLink1**				**Qty**	2
Assembly	Front Uprights Assembly	**FileLink2**		**FileLink1**			
Part	Camber adjustment shims	**FileLink3**		**FileLink2**		**Extended Cost**	$ 3.69
P/N Base	11004			**FileLink3**			
Suffix	AA						
Details							

ItemOrder	Material	Use	UnitCost	Size1	Unit1	Size2	Unit2	Area Name	Area	Length	Density	Quantity	Sub Total
10	Aluminum, Normal (per kg)	Camber adjustment shims	$ 4.20	0.07	kg			Rectangular area 42 x 42 mm	1.76E-03	0.015	2 710.00	1	$ 0.30
												Sub Total	**$ 0.30**

ItemOrder	Process	Use	UnitCost	Unit	Quantity	Multiplier	Mult. Val.	Sub Total
10	Machining Setup, Install and remove		$ 1.30		1			$ 1.30
20	Laser Cut	Camber adjustment shims	$ 0.01	cm	24.6	Material - Aluminum	1	$ 0.25
							Sub Total	**$ 1.55**

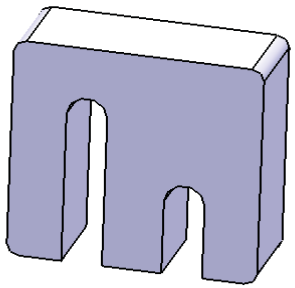

University	Ecole Centrale de Lyon			**Car #**	81	**Part Cost**	$ 1.33
System	Suspension	**FileLink1**				**Qty**	4
Assembly	Front Upright	**FileLink2**		**FileLink1**			
Part	Lower Spacer	**FileLink3**		**FileLink2**		**Extended Cost**	$ 5.34
P/N Base	11005			**FileLink3**			
Suffix	AA						
Details							

ItemOrder	Material	Use	UnitCost	Size1	Unit1	Size2	Unit2	Area Name	Area	Length	Density	Quantity	Sub Total
10	Aluminum, Normal		$ 4.20	3.45E-03	kg			Cylindrical diameter 16 mm	2.54E-04	0.005	2 710.00	1	$ 0.01
												Sub Total	**$ 0.01**

ItemOrder	Process	Use	UnitCost	Unit	Quantity	Multiplier	Mult. Val.	Sub Total
10	Machining Setup, Install and remove		$ 1.30		1			$ 1.30
20	Machining		$ 0.04	cm^3	0.5	Material - Aluminum	1	$ 0.02
							Sub Total	**$ 1.32**

University	Ecole Centrale de Lyon			**Car #**	81	**Part Cost**	$ 1.37
System	Suspension	**FileLink1**				**Qty**	4
Assembly	Front Upright	**FileLink2**		**FileLink1**			
Part	Upper Spacer	**FileLink3**		**FileLink2**		**Extended Cost**	$ 5.49
P/N Base	11006			**FileLink3**			
Suffix	AA						
Details							

ItemOrder	Material	Use	UnitCost	Size1	Unit1	Size2	Unit2	Area Name	Area	Length	Density	Quantity	Sub Total
10	Aluminum, Normal		$ 4.20	7.59E-03	kg			Cylindrical diameter 16 mm	2.54E-04	0.011	2 710.00	1	$ 0.03
												Sub Total	**$ 0.03**

ItemOrder	Process	Use	UnitCost	Unit	Quantity	Multiplier	Mult. Val.	Sub Total
10	Machining Setup, Install and remove		$ 1.30		1			$ 1.30
20	Machining		$ 0.04	cm^3	1	Material - Aluminum	1	$ 0.04
							Sub Total	**$ 1.34**

University	Ecole Centrale de Lyon	**Car #**	81	**Asm Cost**	$ 176.67
System	Suspension			**Qty**	2
Assembly	Rear Uprights Assembly	**FileLink1**			
P/N Base	A0012	**FileLink2**		**Extended Cost**	$ 353.34
Suffix	AA	**FileLink3**			
Details					

ItemOrder	Part	Part Cost	Quantity	Sub Total
10	Rear Uprights	$ 142.90	1	$ 142.90
20	Upper Tab	$ 5.88	2	$ 11.77
30	Camber adjustment shims	$ 1.85	2	$ 3.69
40	Lower Spacer	$ 1.33	2	$ 2.67
50	Upper Spacer	$ 1.37	4	$ 5.49
			Sub Total	**$ 166.52**

ItemOrder	Process	Use	UnitCost	Unit	Quantity	Multiplier	Mult. Val.	Sub Total
10	Assemble, 3 kg, Interference	Assemble with front hub	$ 0.56	Unit	1		1	$ 0.56
20	Assemble, 1 kg, Line-on-Line	Camber adjustment shims assemble	$ 0.13	Unit	2		1	$ 0.26
30	Assemble, 1 kg, Line-on-Line	Upper Tab assemble	$ 0.13	Unit	2		1	$ 0.26
40	Ratchet <= 25.4 mm	Bolt upper tab and upright	$ 0.75	Unit	4		1	$ 3.00
50	Reaction Tool <= 25.4 mm	Bolt upper tab and upright	$ 0.25	Unit	4		1	$ 1.00
60	Assemble, 1 kg, Loose	Upper and Lower spacers assemble	$ 0.06	Unit	6		1	$ 0.36
70	Assemble, 5 kg, Line-on-Line	Assembe with the frame	$ 0.63	Unit	1		1	$ 0.63
80	Ratchet <= 25.4 mm	Bolt upright with Front A arms	$ 0.75	Unit	3		1	$ 2.25
90	Reaction Tool <= 25.4 mm	Bolt upright with Front A arms	$ 0.25	Unit	3		1	$ 0.75
							Sub Total	**9.07**

ItemOrder	Fastener	Use	UnitCost	Size1	Unit1	Size2	Unit2	Quantity	Sub Total
10	Bolt, Grade 8.8 (SAE 5)	Upper tab fixing bolts	$ 0.12	6	mm	50	mm	4	$ 0.48
20	Bolt, Grade 8.8 (SAE 5)	Upright and A arms fixing bolts	$ 0.14	8	mm	35	mm	3	$ 0.42
30	Nut, Grade 8.8 (SAE 5)	Upright and A arms nuts	$ 0.04	8	mm			3	$ 0.12
40	Washer, Grade 8.8 (SAE 5)	Upright and A arms washers	$ 0.01	8	mm			6	$ 0.06
								Sub Total	**$ 1.08**

University	Ecole Centrale de Lyon			**Car #**	81	**Part Cost**	$ 142.90
System	Suspension	**FileLink1**				**Qty**	2
Assembly	Rear Uprights Assembly	**FileLink2**		**FileLink1**			
Part	Rear Uprights	**FileLink3**		**FileLink2**		**Extended Cost**	$ 285.81
P/N Base	12001			**FileLink3**			
Suffix	AA						
Details							

ItemOrder	Material	Use	UnitCost	Size1	Unit1	Size2	Unit2	Area Name	Area	Length	Density	Quantity	Sub Total
10	Aluminum, Premium (per kg)	Front Uprights	$ 4.20	8.70	kg			Rectangular area 252 x 177 mm	4.46E-02	0.072	2 710.00	1	$ 36.55
												Sub Total	**$ 36.55**

ItemOrder	Process	Use	UnitCost	Unit	Quantity	Multiplier	Mult. Val.	Sub Total
10	Machining Setup, Install and remove		$ 1.30	Unit	1			$ 1.30
20	Machining	Material removal - outer profile and slot	$ 0.04	cm^3	2500	Material - Aluminum	1	$ 100.00
30	Machining Setup, Change		$ 0.65		1			$ 0.65
40	Machining	Stock removal	$ 0.04	cm^3	110	Material - Aluminum	1	$ 4.40
							Sub Total	**$ 106.35**

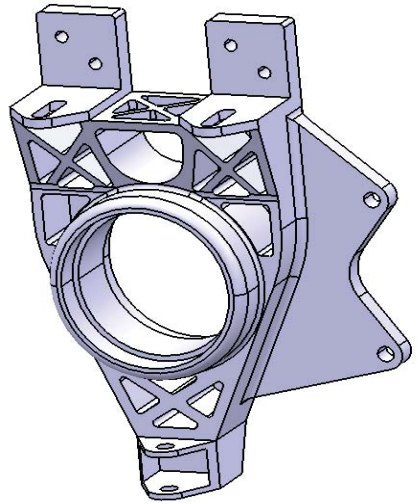

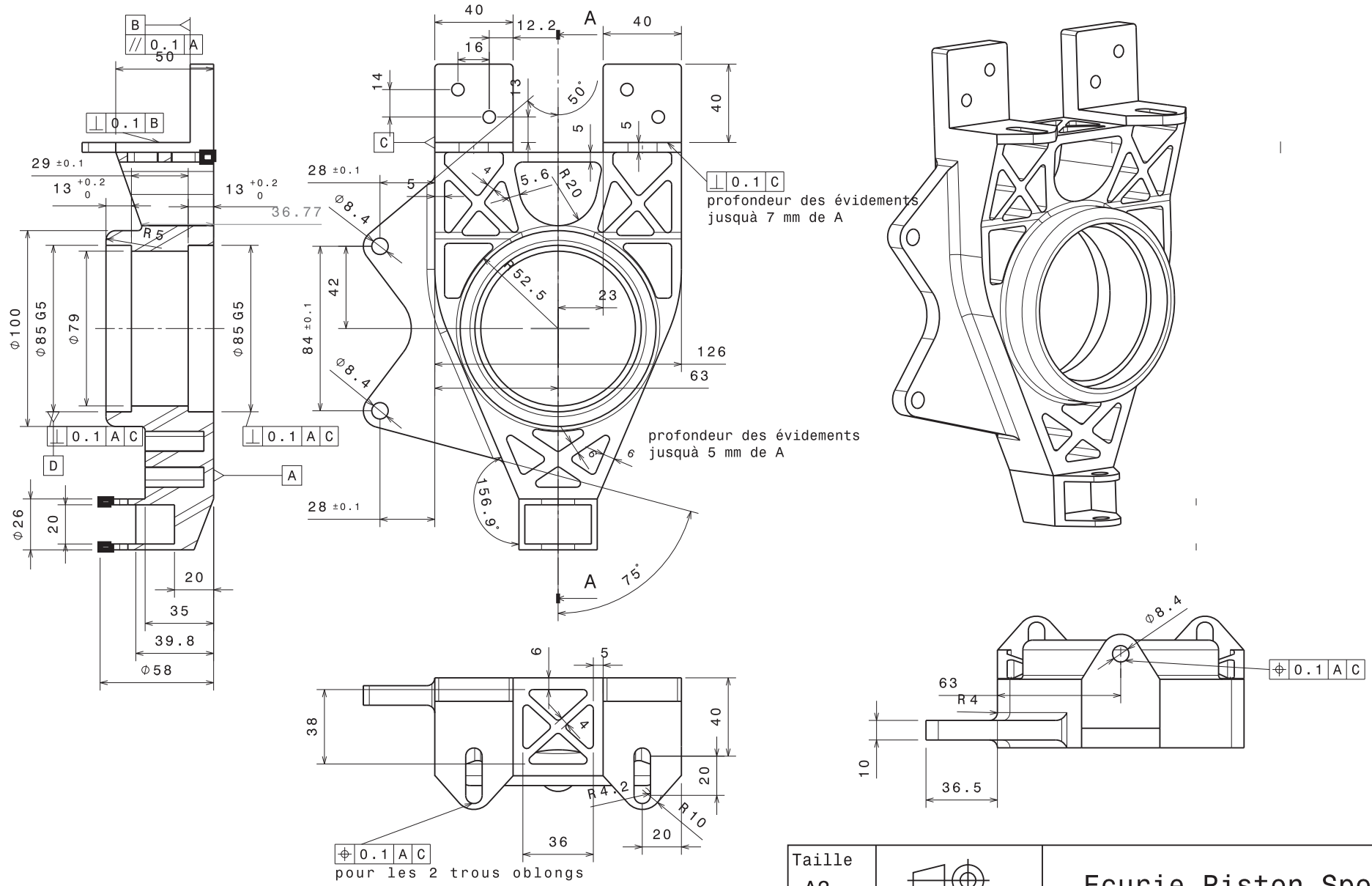

PLANS A VERIFIER AVEC M. PIATON, SUSCEPTIBLE D'EVOLUER

Tolérances générales ISO 2768 - mK

Taille A3		Ecurie Piston Sport Auto
Dessiné par: Pierre-Olivier LE MAREC	Date: 03/12/2013	Désignation: porte moyeu arrière droit
Coordonnées: pierre-olivier.le-marec@ecl2015.ec-lyon.fr 0621106190		Quantité: 1 / Matériau: aluminium 7075 / Version: 0.9
Vérifié par	Date	Echelle 1:2 / Numéro du plan 14B045 / Feuille 1/1

University	Ecole Centrale de Lyon			**Car #**	81	**Part Cost**	$ 5.88
System	Suspension	**FileLink1**				**Qty**	4
Assembly	Rear Uprights Assembly	**FileLink2**		**FileLink1**			
Part	Upper tab	**FileLink3**		**FileLink2**		**Extended Cost**	$ 23.54
P/N Base	12002			**FileLink3**			
Suffix	AA						
Details							

ItemOrder	Material	Use	UnitCost	Size1	Unit1	Size2	Unit2	Area Name	Area	Length	Density	Quantity	Sub Total
10	Aluminum, Normal (per kg)	Upper tab	$ 4.20	0.21	kg			Rectangular area 40 x 44 mm	1.76E-03	0.044	2 710.00	1	$ 0.88
												Sub Total	**$ 0.88**

ItemOrder	Process	Use	UnitCost	Unit	Quantity	Multiplier	Mult. Val.	Sub Total
10	Machining Setup, Install and remove		$ 1.30	Unit	1			$ 1.30
20	Machining	Material removal - outer profile and slot	$ 0.04	cm^3	33.9	Material - Aluminum	1	$ 1.36
30	Machining Setup, Change		$ 0.65	Unit	1			$ 0.65
40	Machining	Stock removal	$ 0.04	cm^3	3.87	Material - Aluminum	1	$ 0.15
50	Machining Setup, Change		$ 0.65	Unit	1			$ 0.65
60	Machining	Material removal - lateral side	$ 0.04	cm^3	22.3	Material - Aluminum	1	$ 0.89
							Sub Total	**$ 5.00**

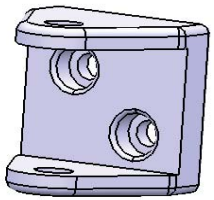

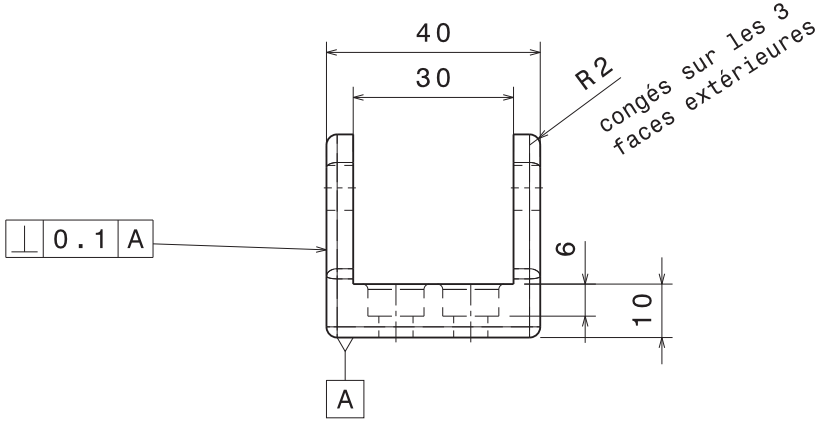

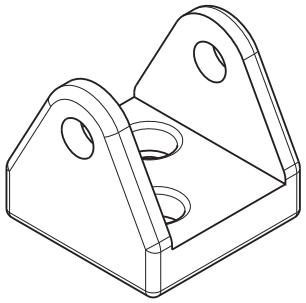

Vue isométrique
Echelle : 1:1

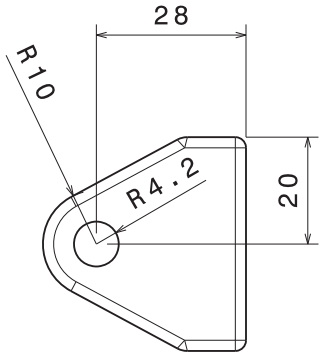

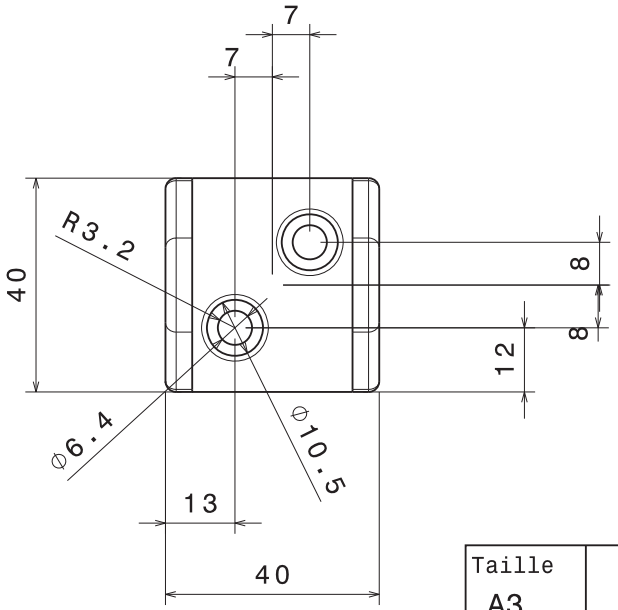

tolérances générales ISO 2768 - mK

TAILLE DU BRUT : 38 mm x 40 mm x 40 mm

Taille A3		Ecurie Piston Sport Auto
Dessiné par: Pierre-Olivier LE MAREC	Date: 25/11/2013	Désignation: chape sup porte moyeu
Coordonnées: 0621106190, pierre-olivier.le-marec@ecl2015.ec-lyon.fr		Quantité: 8 / Matériau: Aluminium 2017 / Version: XXX
Vérifié par	Date	Echelle 1:1 / Numéro du plan 14 B048 / Feuille 1/1

University	Ecole Centrale de Lyon			**Car #**	81	**Part Cost**	$ 1.85
System	Suspension	**FileLink1**				**Qty**	4
Assembly	Rear Uprights Assembly	**FileLink2**		**FileLink1**			
Part	Camber adjustment shims	**FileLink3**		**FileLink2**		**Extended Cost**	$ 3.69
P/N Base	12003			**FileLink3**			
Suffix	AA						
Details							

ItemOrder	Material	Use	UnitCost	Size1	Unit1	Size2	Unit2	Area Name	Area	Length	Density	Quantity	Sub Total
10	Aluminum, Normal (per kg)	Camber adjustment shims	$ 4.20	0.07	kg			Rectangular area 42 x 42 mm	1.76E-03	0.015	2 710.00	1	$ 0.30
												Sub Total	**$ 0.30**

ItemOrder	Process	Use	UnitCost	Unit	Quantity	Multiplier	Mult. Val.	Sub Total
10	Machining Setup, Install and remove		$ 1.30	Unit	1			$ 1.30
10	Laser Cut	Camber adjustment shims	$ 0.01	cm	24.6	Material - Aluminum	1	$ 0.25
							Sub Total	**$ 1.55**

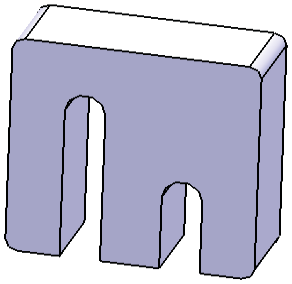

University	Ecole Centrale de Lyon			**Car #**	81	**Part Cost**	$ 1.33
System	Suspension	**FileLink1**				**Qty**	4
Assembly	Rear Uprights Assembly	**FileLink2**		**FileLink1**			
Part	Lower Spacer	**FileLink3**		**FileLink2**		**Extended Cost**	$ 2.67
P/N Base	12004			**FileLink3**			
Suffix	AA						
Details							

ItemOrder	Material	Use	UnitCost	Size1	Unit1	Size2	Unit2	Area Name	Area	Length	Density	Quantity	Sub Total
10	Aluminum, Normal		$ 4.20	3.45E-03	kg			Cylindrical diameter 16 mm	2.54E-04	0.005	2 710.00	1	$ 0.01
												Sub Total	**$ 0.01**

ItemOrder	Process	Use	UnitCost	Unit	Quantity	Multiplier	Mult. Val.	Sub Total
10	Machining Setup, Install and remove		$ 1.30		1			$ 1.30
20	Machining		$ 0.04	cm^3	0.5	Material - Aluminum	1	$ 0.02
							Sub Total	**$ 1.32**

University	Ecole Centrale de Lyon			**Car #**	81	**Part Cost**	$ 1.37
System	Suspension	**FileLink1**				**Qty**	8
Assembly	Rear Uprights Assembly	**FileLink2**		**FileLink1**			
Part	Upper Spacer	**FileLink3**		**FileLink2**		**Extended Cost**	$ 5.49
P/N Base	12005			**FileLink3**			
Suffix	AA						
Details							

ItemOrder	Material	Use	UnitCost	Size1	Unit1	Size2	Unit2	Area Name	Area	Length	Density	Quantity	Sub Total
10	Aluminum, Normal		$ 4.20	7.59E-03	kg			Cylindrical diameter 16 mm	2.54E-04	0.011	2 710.00	1	$ 0.03
												Sub Total	**$ 0.03**

ItemOrder	Process	Use	UnitCost	Unit	Quantity	Multiplier	Mult. Val.	Sub Total
10	Machining Setup, Install and remove		$ 1.30		1			$ 1.30
20	Machining		$ 0.04	cm^3	1	Material - Aluminum	1	$ 0.04
							Sub Total	**$ 1.34**

WHEELS AND TIRES

EPSA TEAM CAR # 81

University	Ecole Cenrale de Lyon	**Car #**	81	**Asm Cost**	$ 209.91
System	Wheels and Tires			**Qty**	4
Assembly	Wheel Assembly	**FileLink1**			
P/N Base	A0001	**FileLink2**		**Extended Cost**	$ 839.64
Suffix	AA	**FileLink3**			
Details	Complete wheel assembly				

ItemOrder	Part	Part Cost	Quantity	Sub Total
10	Wheels	$ 115.00	1	$ 115.00
20	Tires	$ 85.00	1	$ 85.00
30	Valve stem	$ 1.00	1	$ 1.00
			Sub Total	**$ 201.00**

ItemOrder	Material	Use	UnitCost	Size1	Unit1	Size2	Unit2	Area Name	Area	Length	Density	Quantity	Sub Total
10	Wheel Weights (and Balancing)		$ 4.00									1	$ 4.00
												Sub Total	**$ 4.00**

ItemOrder	Process	Use	UnitCost	Unit	Quantity	Multiplier	Mult. Val.	Sub Total
10	Assemble, 5kg, loose	Fix Wheels on Hub	$ 0.31	unit	1		1	$ 0.31
20	Ratchet <=25.4mm	Tighten Lug Nuts	$ 0.75	labor	4		1	$ 3.00
							Sub Total	**$ 3.31**

ItemOrder	Fastener	Use	UnitCost	Size1	Unit1	Size2	Unit2	Quantity	Sub Total
10	Nut, Lug	Lug Nuts	$ 0.40					4	$ 1.60
								Sub Total	**$ 1.60**

University	Ecole Centrale de Lyon			**Car #**	81	**Part Cost**	$ 115.00
System	Wheels and Tires	**FileLink1**				**Qty**	4
Assembly	Wheel Assembly	**FileLink2**		**FileLink1**			
Part	Wheel	**FileLink3**		**FileLink2**		**Extended Cost**	$ 460.00
P/N Base	01001			**FileLink3**			
Suffix	AA						
Details	Oz racing 13x7' aluminium						

ItemOrder	Material	Use	UnitCost	Size1	Unit1	Size2	Unit2	Area Name	Area	Length	Density	Quantity	Sub Total
10	Wheel, 13", 1 Piece OEM, Aluminum	Wheels	$ 115.00									1	$ 115.00
												Sub Total	**$ 115.00**

University	Ecole Centrale de Lyon			**Car #**	81	**Part Cost**	$ 85.00
System	Wheels and Tires	**FileLink1**				**Qty**	4
Assembly	Wheel Assembly	**FileLink2**		**FileLink1**			
Part	Tire	**FileLink3**		**FileLink2**		**Extended Cost**	$ 340.00
P/N Base	01002			**FileLink3**			
Suffix	AA						
Details	Hoosier, R25B, 13"-20.5 x 7.0						

ItemOrder	Material	Use	UnitCost	Size1	Unit1	Size2	Unit2	Area Name	Area	Length	Density	Quantity	Sub Total
10	Hoosier, R25B, 13"-20.5 x 7.0		$ 85.00									1	$ 85.00
												Sub Total	**$ 85.00**

University	Ecole Centrale de Lyon			**Car #**	81	**Part Cost**	$ 1.00
System	Wheels and Tires	**FileLink1**				**Qty**	4
Assembly	Wheel Assembly	**FileLink2**		**FileLink1**			
Part	Valve stem	**FileLink3**		**FileLink2**		**Extended Cost**	$ 4.00
P/N Base	01003			**FileLink3**			
Suffix	AA						
Details	Purchased Valve Stem						

ItemOrder	Material	Use	UnitCost	Size1	Unit1	Size2	Unit2	Area Name	Area	Length	Density	Quantity	Sub Total
10	Valve stem (and inflation tire)		1		unit							1	$ 1.00
												Sub Total	**$ 1.00**

University	Ecole Centrale de Lyon	**Car #**	81	**Asm Cost**	$ 371.37
System	Wheels and Tires			**Qty**	2
Assembly	Front Hubs	**FileLink1**			
P/N Base	A0002	**FileLink2**		**Extended Cost**	$ 742.75
Suffix	AA	**FileLink3**			
Details					

ItemOrder	Part	Part Cost	Quantity	Sub Total
10	Front Hub	$ 91.31	1	$ 91.31
20	Bearings	$ 122.59	2	$ 245.18
			Sub Total	**$ 336.49**

ItemOrder	Material	Use	UnitCost	Size1	Unit1	Size2	Unit2	Area Name	Area	Length	Density	Quantity	Sub Total
10	Locknut/L.P.///Steel/	Bearing Nuts	$ 9.13	60	mm							1	$ 18.26
												Sub Total	**$ 18.26**

ItemOrder	Process	Use	UnitCost	Unit	Quantity	Multiplier	Mult. Val.	Sub Total
10	Assemble, 1 kg, Interference	Wheel studs and hub assemble	$ 0.19	Unit	4			$ 0.76
20	Assemble, 1 kg, Interference	Bearings assemble	$ 0.19	Unit	2			$ 0.38
30	Wrench > 25.4 mm	Bearing nuts	$ 2.00	Unit	1			$ 2.00
							Sub Total	**$ 3.14**

ItemOrder	Fastener	Use	UnitCost	Size1	Unit1	Size2	Unit2	Quantity	Sub Total
10	Stud, Grade 12.9	Wheel studs	$ 3.37	12	mm	150	mm	4	$ 13.48
								Sub Total	**$ 13.48**

University	Ecole Centrale de Lyon			**Car #**	81	**Part Cost**	$ 91.31
System	Wheels and tires	**FileLink1**				**Qty**	2
Assembly	Front Hubs	**FileLink2**		**FileLink1**			
Part	Front hub	**FileLink3**		**FileLink2**		**Extended Cost**	$ 182.63
P/N Base	02001			**FileLink3**			
Suffix	AA						
Details							

ItemOrder	Material	Use	UnitCost	Size1	Unit1	Size2	Unit2	Area Name	Area	Length	Density	Quantity	Sub Total
10	Aluminum, Premium (per kg)	Front Hub	$ 4.20	4.59	kg			Round 140 mm diameter	1.54E-02	0.110	2 710.00	1	$ 19.26
												Sub Total	**$ 19.26**

ItemOrder	Process	Use	UnitCost	Unit	Quantity	Multiplier	Mult. Val.	Sub Total
10	Machining Setup, Install and remove		$ 1.30	Unit	1			$ 1.30
20	Machining	Turning	$ 0.04	cm^3	1620	Material - Aluminum	1	$ 64.80
30	Machining Setup, Change		$ 0.65		1			$ 0.65
40	Machining	Milling	$ 0.04	cm^3	119	Material - Aluminum	1	$ 4.76
50	Threading, Internal (machining)		$ 0.10	cm	3			$ 0.30
60	Threading, External (machining)		$ 0.10	cm	2.4			$ 0.24
							Sub Total	**$ 72.05**

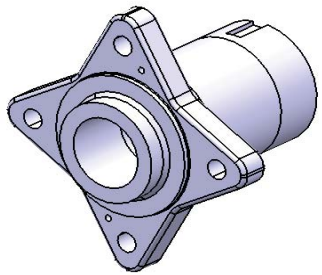

Respecter les 90 ° entre les 4 trous

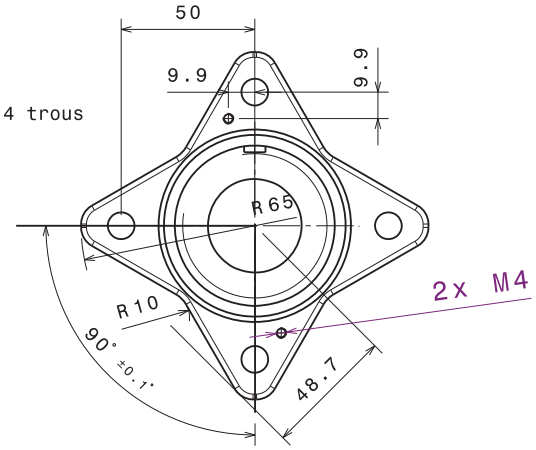

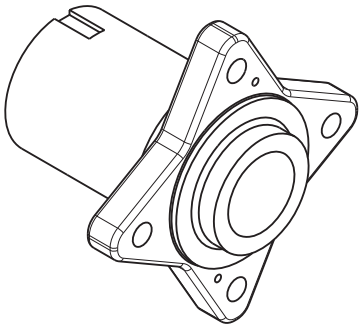

Diamètre à définir avec M.Piaton

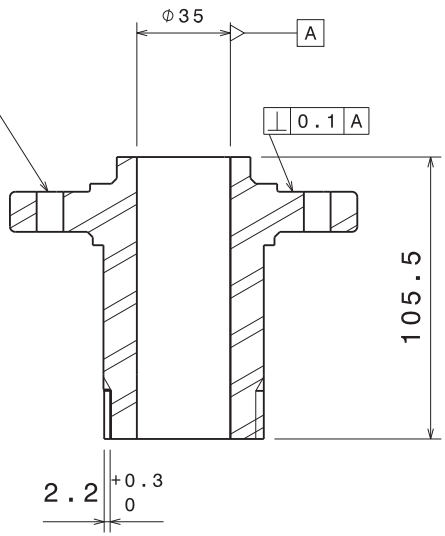

Coupe A-A

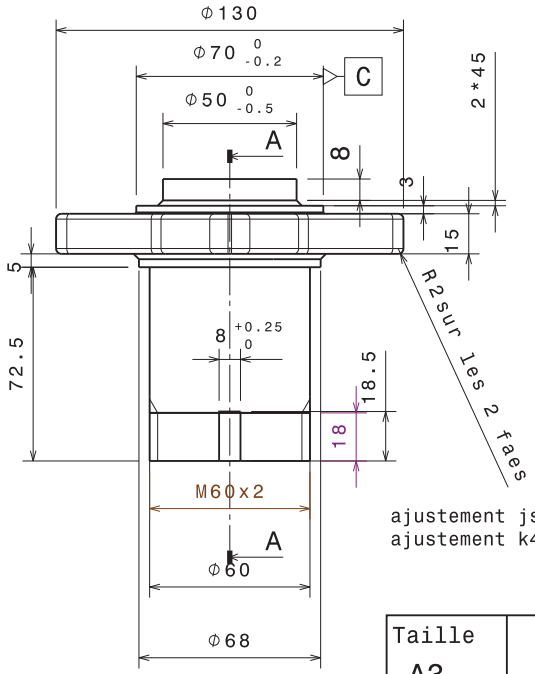

TAILLE DU BRUT : CYLINDRE Φ130mm, hauteur 105.5mm

ajustement js4 du bord à 14 mm de l'épaulement,
ajustement k4 ensuite

Tolérances générales ISO 2768 - mK

Taille A3		Ecurie Piston Sport Auto
Dessiné par: Thomas Derouin	Date: 16/02/2014	Désignation: moyeu avant
Coordonnées: thomas.derouin@ecl2015.ec-lyon.fr, 06 50 61 35 55		Quantité: 3 / Matériau: Aluminium 7075 / Version: 2.0
Vérifié par	Date	Echelle 1:2 / Numéro du plan 14B046 / Feuille 1/1

University	Ecole Centrale de Lyon			**Car #**	81	**Part Cost**	$ 122.59
System	Wheels and tires	**FileLink1**				**Qty**	4
Assembly	Front Hubs	**FileLink2**		**FileLink1**			
Part	Bearings	**FileLink3**		**FileLink2**		**Extended Cost**	$ 490.36
P/N Base	02002			**FileLink3**			
Suffix	AA						
Details	FAG Bearings						

ItemOrder	Material	Use	UnitCost	Size1	Unit1	Size2	Unit2	Area Name	Area	Length	Density	Quantity	Sub Total
10	Wheel Bearing, Ball, Angular Contact	Wheel Bearings	$ 122.59	85.00	mm	13	mm					1	$ 122.59
												Sub Total	**$ 122.59**

University	Ecole Centrale de Lyon	**Car #**	81	**Asm Cost**	$ 375.17
System	Wheels and Tires			**Qty**	2
Assembly	Rear Hubs	**FileLink1**			
P/N Base	A0003	**FileLink2**		**Extended Cost**	$ 750.35
Suffix	AA	**FileLink3**			
Details					

ItemOrder	Part	Part Cost	Quantity	Sub Total
10	Rear Hub	$ 93.11	1	$ 93.11
20	Bearings	$ 122.59	2	$ 245.18
			Sub Total	**$ 338.29**

ItemOrder	Material	Use	UnitCost	Size1	Unit1	Size2	Unit2	Area Name	Area	Length	Density	Quantity	Sub Total
10	Locknut/L.P.///Steel/	Bearing Nuts	$ 9.13	60	mm							2	$ 18.26
												Sub Total	**$ 18.26**

ItemOrder	Process	Use	UnitCost	Unit	Quantity	Multiplier	Mult. Val.	Sub Total
10	Assemble, 1 kg, Interference	Wheel studs and hub assemble	$ 0.19	Unit	4			$ 0.76
20	Assemble, 1 kg, Interference	Bearings assemble	$ 0.19	Unit	2			$ 0.38
30	Wrench > 25.4 mm	Bearing nuts	$ 2.00	Unit	2			$ 4.00
							Sub Total	**$ 5.14**

ItemOrder	Fastener	Use	UnitCost	Size1	Unit1	Size2	Unit2	Quantity	Sub Total
10	Stud, Grade 12.9	Wheel studs	$ 3.37	12	mm	150	mm	4	$ 13.48
								Sub Total	**$ 13.48**

University	Ecole Centrale de Lyon			**Car #**	81	**Part Cost**	$ 93.11
System	Wheels and tires	**FileLink1**				**Qty**	2
Assembly	Rear Hubs	**FileLink2**		**FileLink1**			
Part	Rear hub	**FileLink3**		**FileLink2**		**Extended Cost**	$ 186.23
P/N Base	03001			**FileLink3**			
Suffix	AA						
Details							

ItemOrder	Material	Use	UnitCost	Size1	Unit1	Size2	Unit2	Area Name	Area	Length	Density	Quantity	Sub Total
10	Aluminum, Premium (per kg)	Rear Hub	$ 4.20	4.59	kg			Round 140 mm diameter	1.54E-02	0.110	2 710.00	1	$ 19.26
												Sub Total	**$ 19.26**

ItemOrder	Process	Use	UnitCost	Unit	Quantity	Multiplier	Mult. Val.	Sub Total
10	Machining Setup, Install and remove		$ 1.30	Unit	1			$ 1.30
20	Machining	Turning	$ 0.04	cm^3	1620	Material - Aluminum	1	$ 64.80
30	Machining Setup, Change		$ 0.65		1			$ 0.65
40	Machining	Milling	$ 0.04	cm^3	119	Material - Aluminum	1	$ 4.76
50	Threading, Internal (machining)		$ 0.10	cm	3			$ 0.30
60	Threading, External (machining)		$ 0.10	cm	2.4			$ 0.24
70	Broach, Internal		$ 0.50	cm	3.6			$ 1.80
							Sub Total	**$ 73.85**

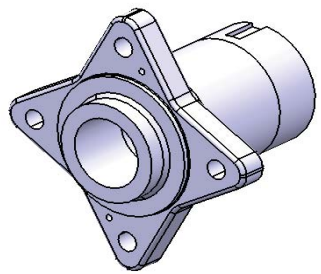

Respecter les 90 ° entre les 4 trous

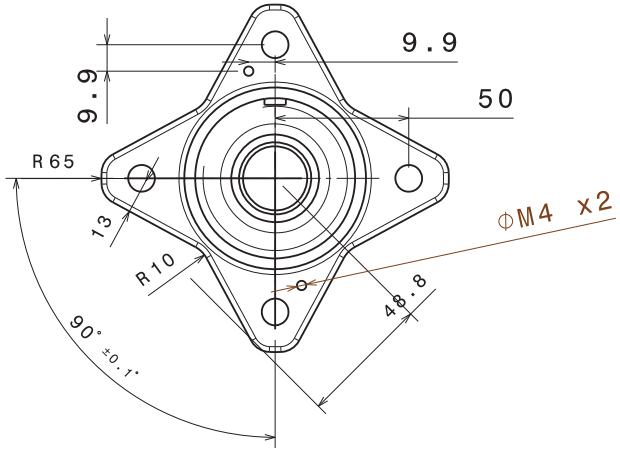

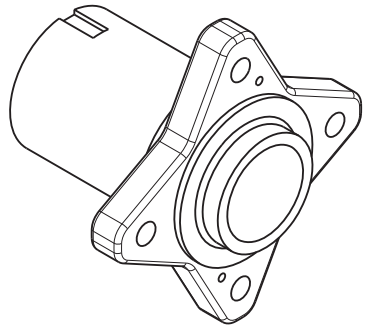

TAILLE DU BRUT : Cylindrique Φ130 mm, hauteur 105 mm

Diamètre à définir avec M.Piaton

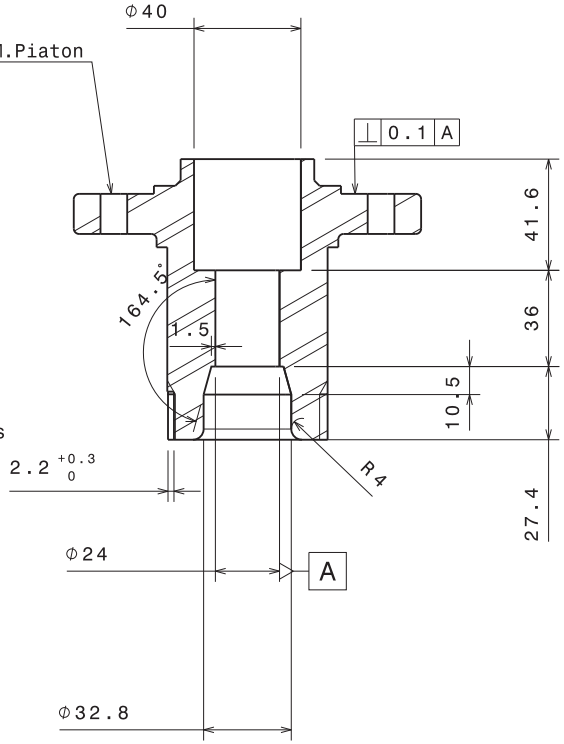

Cannelures :
- 26 dents
- Module 1
- Angle de pression 45°
- Diamètre ext 1.050 inch
- Diamètre int 0.980 inch
- 1.156 over .080 dia. pins
- Class 5 slide fit

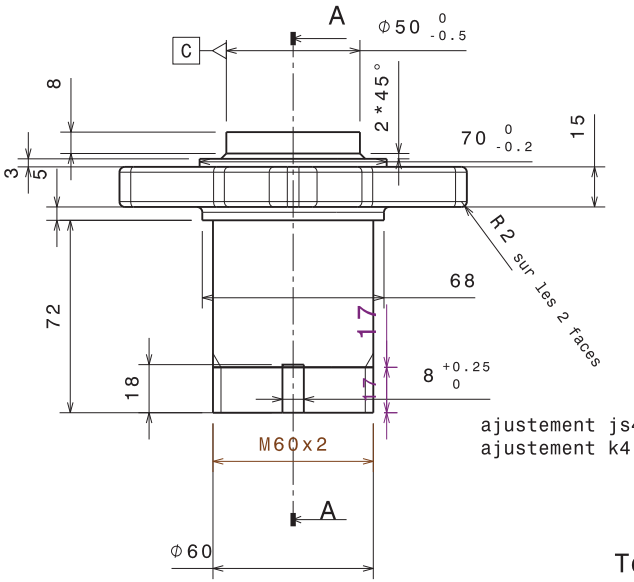

ajustement js4 du bord à 14 mm de l'épaulement,
ajustement k4 ensuite

Tolérances générales ISO 2768 - mK

Taille A3		Ecurie Piston Sport Auto
Dessiné par: Thomas Derouin	Date: 16/02/2014	Désignation: Moyeu arrière
Coordonnées: 06 50 61 35 55, thomas.derouin@ecl2015.ec-lyon.fr		Quantité: 3 / Matériau: Aluminium 7075 / Version: 2.0
Vérifié par	Date	Echelle 1:2 / Numéro du plan 14B047 / Feuille 1/1

University	Ecole Centrale de Lyon			**Car #**	81	**Part Cost**	$ 122.59
System	Wheels and tires	**FileLink1**				**Qty**	4
Assembly	Rear Hubs	**FileLink2**		**FileLink1**			
Part	Bearings	**FileLink3**		**FileLink2**		**Extended Cost**	$ 490.36
P/N Base	03002			**FileLink3**			
Suffix	AA						
Details	FAG Bearings						

ItemOrder	Material	Use	UnitCost	Size1	Unit1	Size2	Unit2	Area Name	Area	Length	Density	Quantity	Sub Total
10	Wheel Bearing, Ball, Angular Contact	Wheel Bearings	$ 122.59	85.00	mm	13	mm					1	$ 122.59
												Sub Total	**$ 122.59**