ÉCOLE CENTRALE LYON

COST REPORT

EPSA TEAM

CAR # 81

Ecurie Piston Sport Auto

Cost Summary Basics

for: **Ecole Centrale de Lyon**
Car # 81

Area Totals	Materials	Processes	Fasteners	Tooling	Total
Brake System	$ 1 028.21	$ 141.76	$ 6.06	$ 0.67	$ 1 176.70
Engine & Drivetrain	$ 2 930.68	$ 1 542.12	$ 55.10	$ 73.63	$ 4 601.52
Frame & Body	$ 2 263.04	$ 2 064.23	$ 20.11	$ 98.26	$ 4 443.45
Instruments & Wiring	$ 1 522.65	$ 528.78	$ 5.99	$ 7.02	$ 2 064.44
Miscellaneous, Fit & Finish	$ 239.94	$ 231.72	$ 7.60	$ 14.67	$ 842.54
Steering System	$ 107.36	$ 123.69	$ 3.56	$ 14.66	$ 249.27
Suspension & Shocks	$ 1 075.72	$ 641.17	$ 20.05	$ 21.34	$ 4 110.32
Wheels & Tires	$ 1 038.16	$ 199.25	$ 60.32	$ -	$ 2 952.51
Total Vehicle	$ 10 205.76	$ 5 472.71	$ 178.79	$ 230.25	$ 20 440.75

Composition for total vehicle:

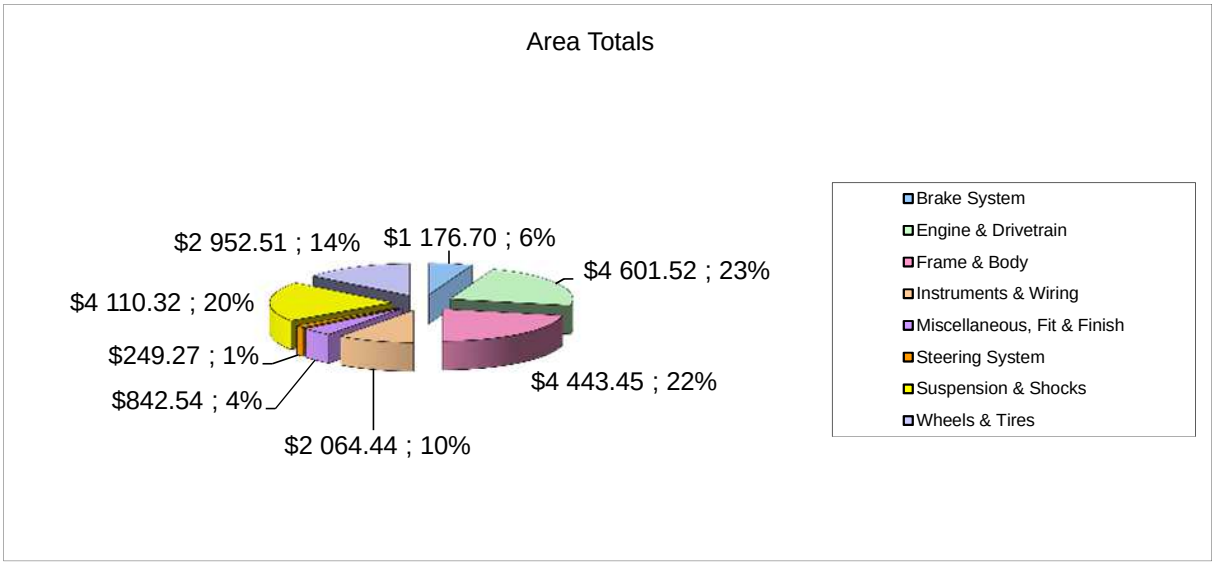

University	Ecole Centrale de Lyon
Competition Code	FSAEI
Year	15
Car #	81

Total Vehicle Cost	20440.75

The cost of assemlies on this chart should not include the cost of the parts in the assembly but only the materials, processes, fasteners and tooling in the assembly level.

Line Num.	Area of Commodity	Asm/Prt #	Rev. Lvl.	Asm	Component	Description	Unit Cost	Quantity	Material Cost	Process Cost	Fastener Cost	Tooling Cost	Total Cost	Details Page Number
1	Brake System	BR A0001	AA		Front Brake Assembly		3.63	2		3.03	0.6		7.26	11
2	Brake System	BR 01001	AA	Front brake Assembly	Front Brake disc		7.36	2	0.96	6.4			14.72	12
3	Brake System	BR 01002	AA	Front brake Assembly	Front Brake Shrink Disc		4.67	2	1.36	3.31			9.34	14
4	Brake System	BR 01003	AA	Front brake Assembly	Front Brake Caliper		83.00	2	83				166.00	16
5	Brake System	BR 01004	AA	Front brake Assembly	Front Brake Pad		0.96	4	0.96				3.84	17
6	Brake System	BR 01005	AA	Front brake Assembly	Front Fastening Axis		1.35	10	0.02	1.33			13.50	18
7	Brake System	BR A0002	AA		Rear Brake Assembly		4.08	2		3.4	0.68		8.16	20
8	Brake System	BR 02001	AA	Rear Brake Assembly	Rear Brake Disc		7.36	2	0.96	6.4			14.72	21
9	Brake System	BR 02002	AA	Rear Brake Assembly	Rear Brake Shrink Disc		4.67	2	1.36	3.31			9.34	23
10	Brake System	BR 02003	AA	Rear Brake Assembly	Rear Brake Caliper		112.50	2	112.5				225.00	25
11	Brake System	BR 02004	AA	Rear Brake Assembly	Rear Brake Pad		0.96	4	0.96				3.84	26
12	Brake System	BR 02005	AA	Front brake Assembly	Rear Fastening Axis		1.35	10	0.02	1.33			13.50	27
13	Brake System	BR A0003	AA		Brake Circuit Assembly		458.05	1	395.83	58.05	3.5	0.67	458.05	29
14	Brake System	BR 03001	AA	Brake Circuit Assembly	Brake Reservoir Tab		1.81	1	0.01	1.8			1.81	31
15	Brake System	BR 03002	AA	Brake Circuit Assembly	Brake Reservoir Mount		2.07	1	0.01	2.06			2.07	32
16	Brake System	BR 03003	AA	Brake Circuit Assembly	Master Cylinder		97.00	2	97				194.00	33
17	Brake System	BR 03004	AA	Brake Circuit Assembly	Balance Bar		30.00	1	30				30.00	34
18	Brake System	BR 03005	AA	Brake Circuit Assembly	Tee Mount		1.55	1	0	1.55			1.55	35
19	Brake System				Area Total				1028.21	141.76	6.06	0.67	1176.70	

Line Num.	Area of Commodity	Asm/Prt #	Rev. Lvl.	Asm	Component	Description	Unit Cost	Quantity	Material Cost	Process Cost	Fastener Cost	Tooling Cost	Total Cost	Details Page Number
20	Engine & Drivetrain	EN A0001	AA		Engine		124.95	1	44.125	75.5775	1.92	3.33	124.95	37
21	Engine & Drivetrain	EN 01001	AA	Engine	Engine		1 500.00	1	1500				1500.00	39
22	Engine & Drivetrain	EN 01002	AA	Engine	Front mount		2.35	6	0.454	1.9			14.12	40
23	Engine & Drivetrain	EN 01003	AA	Engine	Upper mount		13.75	2	0.313	12.78		0.66	27.51	42
24	Engine & Drivetrain	EN 01004	AA	Engine	Upper axle		3.12	1	0.735	2.38			3.12	45
25	Engine & Drivetrain	EN 01005	AA	Engine	Bottom mount		1.72	2	0.018	1.7			3.44	47
26	Engine & Drivetrain	EN 01006	AA	Engine	Bottom link		15.71	2	0.318	14.06		1.33	31.42	49
27	Engine & Drivetrain	EN 01007	AA	Engine	Bottom axle		3.05	1	0.667	2.38			3.05	53
28	Engine & Drivetrain	EN 01008	AA	Engine	Flat sump		56.26	1	3.57	43.47	0.89	8.33	56.26	55
29	Engine & Drivetrain	EN 01009	AA	Engine	Obstruction plate		5.88	2	0.082	5.72	0.08		11.76	61
30	Engine & Drivetrain	EN A0002	AA		Exhaust assembly		80.74	1	63.5	15.29	0.62	1.33	80.74	63
31	Engine & Drivetrain	EN 02001	AA	Exhaust assembly	Exhaust tip		4.86	4	0.75	4.11			19.44	64
32	Engine & Drivetrain	EN 02002	AA	Exhaust assembly	Exhaust flange		2.00	4	0.35	1.65			8.00	66
33	Engine & Drivetrain	EN 02003	AA	Exhaust assembly	Exhaust headers		83.81	1	2.1	75.04		6.67	83.81	67
34	Engine & Drivetrain	EN 02004	AA	Exhaust assembly	Primary collector		27.57	2	0.3	20.6		6.67	55.14	68
35	Engine & Drivetrain	EN 02005	AA	Exhaust assembly	Primary collector tubing		47.99	2	0.7	44.96		2.33	95.98	69
36	Engine & Drivetrain	EN 02006	AA	Exhaust assembly	Secondary collector		27.81	1	0.24	20.9		6.67	27.81	70
37	Engine & Drivetrain	EN 02007	AA	Exhaust assembly	Secondary collector tubing		32.93	1	0.4	30.2		2.33	32.93	71
38	Engine & Drivetrain	EN 02008	AA	Exhaust assembly	Muffler		60.94	1	27.02	33.92			60.94	72
39	Engine & Drivetrain	EN A0003	AA		Fuel tank assembly		51.25	1	42.74	4.64	1.87	2	51.25	73
40	Engine & Drivetrain	EN 03001	AA	Fuel tank assembly	Fuel tank assembly		73.93	1	15.82	53.11		5	73.93	75
41	Engine & Drivetrain	EN 03002	AA	Fuel tank assembly	Filler tube		15.01	1	8.52	4.74	1.08	0.67	15.01	82
42	Engine & Drivetrain	EN 03003	AA	Fuel tank assembly	Filler cap		19.19	1	15.33	3.86			19.19	84
43	Engine & Drivetrain	EN 03004	AA	Fuel tank assembly	Filler tube collar		2.16	1	0.03	2.13			2.16	85
44	Engine & Drivetrain	EN 03005	AA	Fuel tank assembly	Fuel tank tab		2.22	3	0.02	2.2			6.66	86
45	Engine & Drivetrain	EN 03006	AA	Fuel tank assembly	Front mount		8.11	1	0.48	7.47	0.16		8.11	88
46	Engine & Drivetrain	EN 03007	AA	Fuel tank assembly	Filler tube mount		1.55	1	0.01	1.54			1.55	91
47	Engine & Drivetrain	EN A0004	AA		Fuel system		409.57	1	373.81	34.12	0.81	0.83	409.57	93
48	Engine & Drivetrain	EN 04001	AA	Fuel system	Fuel rail		12.46	1	0.75	9.38		2.33	12.46	95
49	Engine & Drivetrain	EN 04002	AA	Fuel system	Fuel pump tab		1.56	1	0.02	1.54			1.56	96
50	Engine & Drivetrain	EN 04003	AA	Fuel system	Fuel regulator tab		2.05	1	0.04	2.01			2.05	98
51	Engine & Drivetrain	EN 04004	AA	Fuel system	Fuel pump collar		2.59	1	0.04	2.55			2.59	100
52	Engine & Drivetrain	EN 04005	AA	Fuel system	Fuel rail mount 1		2.24	2	0.12	2.12			4.48	101
53	Engine & Drivetrain	EN 04006	AA	Fuel system	Fuel rail mount 2		2.24	1	0.12	2.12			2.24	103
54	Engine & Drivetrain	EN A0005	AA		Air intake system		46.22	1	1.44	27.98	16.8		46.22	105
55	Engine & Drivetrain	EN 05001	AA	Air intake system	Plenum		11.76	1	1.1	10.66			11.76	106
56	Engine & Drivetrain	EN 05002	AA	Air intake system	Plenum plate		3.30	1	0.49	2.81			3.30	107
57	Engine & Drivetrain	EN 05003	AA	Air intake system	Inlet pipes		10.09	1	0.94	9.15			10.09	109
58	Engine & Drivetrain	EN 05004	AA	Air intake system	Pipe end		1.97	4	0.18	1.79			7.88	110
59	Engine & Drivetrain	EN 05005	AA	Air intake system	Plenum mounts		2.25	2	0.02	2.23			4.50	111
60	Engine & Drivetrain	EN A0006	AA		Throttle body		130.79	1	118.6	9.59	1.27	1.33	130.79	113
61	Engine & Drivetrain	EN 06001	AA	Throttle body	Throttle flange		5.18	1	0.73	4.45			5.18	115
62	Engine & Drivetrain	EN 06002	AA	Throttle body	Restrictor		5.73	1	1.58	4.15			5.73	116
63	Engine & Drivetrain	EN 06003	AA	Throttle body	Throttle housing		4.28	1	0.85	3.43			4.28	117
64	Engine & Drivetrain	EN 06004	AA	Throttle body	Throttle axle		2.73	1	0.06	2.67			2.73	118
65	Engine & Drivetrain	EN 06005	AA	Throttle body	TPS axle		2.71	1	0.04	2.67			2.71	119
66	Engine & Drivetrain	EN 06006	AA	Throttle body	Throttle plate		1.49	1	0.07	1.42			1.49	120
67	Engine & Drivetrain	EN 06007	AA	Throttle body	Cable housing		4.57	1	0.17	3.4		1	4.57	121
68	Engine & Drivetrain	EN 06008	AA	Throttle body	Axle stop		2.04	1	0.26	1.78			2.04	122
69	Engine & Drivetrain	EN 06009	AA	Throttle body	Ram pipe		12.50	1	4	8.5			12.50	123
70	Engine & Drivetrain	EN 06010	AA	Throttle body	Tab		1.94	1	0.06	1.88			1.94	124
71	Engine & Drivetrain	EN 06011	AA	Throttle body	Throttle body braquet		2.92	1	0.27	2.65			2.92	125
72	Engine & Drivetrain	EN 06012	AA	Throttle body	Throttle body upper collar		0.51	1	0.03	0.48			0.51	126
73	Engine & Drivetrain	EN 06013	AA	Throttle body	Throttle body bottom collar		1.91	1	0.03	1.88			1.91	127
74	Engine & Drivetrain	EN A0007	AA		Overflow bottles		24.21	1	15.16	7.12	1.6	0.33	24.21	128
75	Engine & Drivetrain	EN 07001	AA	Overflow bottles	Overflow bottles tab		1.56	1	0.02	1.54			1.56	129
76	Engine & Drivetrain	EN 07002	AA	Overflow bottles	Bottles bottom mount		2.78	2	0.1	2.68			5.56	131
77	Engine & Drivetrain	EN 07003	AA	Overflow bottles	Bottles upper mount		2.28	2	0.03	2.25			4.56	132

Line Num.	Area of Commodity	Asm/Prt #	Rev. Lvl.	Asm	Component	Description	Unit Cost	Quantity	Material Cost	Process Cost	Fastener Cost	Tooling Cost	Total Cost	Details Page Number
78	Engine & Drivetrain	EN A0008	AA		Engine cooling system		46.06	1	27	14.88	1.51	2.67	46.06	133
79	Engine & Drivetrain	EN 08001	AA	Engine cooling system	Coolant lines		32.42	1	5.64	24.38	2.4		32.42	135
80	Engine & Drivetrain	EN 08002	AA	Engine cooling system	Radiator		11.84	1	11.84				11.84	136
81	Engine & Drivetrain	EN 08003	AA	Engine cooling system	Fan		30.77	1	30	0.37	0.4		30.77	138
82	Engine & Drivetrain	EN 08004	AA	Engine cooling system	Expansion tank		23.08	1	3.72	17.53		1.83	23.08	139
83	Engine & Drivetrain	EN 08005	AA	Engine cooling system	Radiator upper tab		1.77	1	0.048	1.72			1.77	141
84	Engine & Drivetrain	EN 08006	AA	Engine cooling system	Radiator lower tab		1.71	1	0.044	1.67			1.71	143
85	Engine & Drivetrain	EN 08007	AA	Engine cooling system	Radiator lateral tab		1.76	2	0.05	1.71			3.52	145
86	Engine & Drivetrain	EN 08008	AA	Engine cooling system	Lateral bar		8.11	1	3.84	4.27			8.11	147
87	Engine & Drivetrain	EN A0009	AA		Shifter		37.32	1	10	26.7	0.29	0.33	37.32	149
88	Engine & Drivetrain	EN 09001	AA	Shifter	Engine gearbox drum gear		17.97	1	1.62	16.35			17.97	151
89	Engine & Drivetrain	EN 09002	AA	Shifter	Engine gearbox shifting pinion shaft		17.48	1	2.39	15.09			17.48	152
90	Engine & Drivetrain	EN 09003	AA	Shifter	Engine gearbox actuator tab		1.88	1	0.04	1.84			1.88	153
91	Engine & Drivetrain	EN 09004	AA	Shifter	Front engine gearbox actuator mount		3.05	1	0.03	3.02			3.05	155
92	Engine & Drivetrain	EN 09005	AA	Shifter	Rear engine gearbox actuator mount 2		2.93	1	0.07	2.86			2.93	157
93	Engine & Drivetrain	EN 09006	AA	Shifter	Rear engine gearbox actuator mount 3		5.74	1	0.25	5.45	0.04		5.74	159
94	Engine & Drivetrain	EN 09007	AA	Shifter	Engine gearbox actuator		40.00	1	40				40.00	160
95	Engine & Drivetrain	EN 09008	AA	Shifter	Engine gearbox actuator elastomer mount		2.43	1	2.43				2.43	161
96	Engine & Drivetrain	EN A0010	AA		Differential		84.01	1	70.82	8.39	0.8	4	84.01	162
97	Engine & Drivetrain	EN 10001	AA	Differential	Housing		125.31	1	21.58	100.59	3.14		125.31	164
98	Engine & Drivetrain	EN 10002	AA	Differential	Internals		110.00	1	110				110.00	166
99	Engine & Drivetrain	EN 10003	AA	Differential	Right bearing carrier		39.62	1	8.78	30.84			39.62	167
100	Engine & Drivetrain	EN 10004	AA	Differential	Left bearing carrier		43.56	1	9.7	33.86			43.56	169
101	Engine & Drivetrain	EN 10005	AA	Differential	Before bearing carrier tab (right and left)		0.73	4	0.04	0.69			2.92	171
102	Engine & Drivetrain	EN 10006	AA	Differential	Behind bearing carrier tab (right and left)		0.72	4	0.03	0.69			2.88	173
103	Engine & Drivetrain	EN 10007	AA	Differential	Right eccentric		24.32	1	1.87	22.45			24.32	175
104	Engine & Drivetrain	EN 10008	AA	Differential	Left eccentric		25.98	1	2.03	23.95			25.98	177
105	Engine & Drivetrain	EN A0011	AA		Driveshaft		232.30	1	200	15.92	16.38		232.30	179
106	Engine & Drivetrain	EN 11001	AA	Driveshaft	Inboard tripod housing		67.72	2	9.53	58.19			135.44	180
107	Engine & Drivetrain	EN 11002	AA	Driveshaft	Outboard tripod housing		77.68	2	10.32	67.36			155.36	181
108	Engine & Drivetrain	EN 11003	AA	Driveshaft	Right axle		20.31	1	2.77	17.54			20.31	182
109	Engine & Drivetrain	EN 11004	AA	Driveshaft	Left axle		20.31	1	2.77	17.54			20.31	183
110	Engine & Drivetrain	EN A0012	AA		Chain set		72.46	1	52	16.83	2.96	0.67	72.46	184
111	Engine & Drivetrain	EN 12001	AA	Chain set	Front sprocket		12.59	1	1.59	11			12.59	186
112	Engine & Drivetrain	EN 12002	AA	Chain set	Rear sprocket		14.02	1	3.04	10.98			14.02	187
113	Engine & Drivetrain	EN 12003	AA	Chain set	Rear sprocket adapter		23.16	1	4.52	18.64			23.16	189
114	Engine & Drivetrain	EN 12004	AA	Chain set	Chain shield		8.07	1	2.17	5.9			8.07	191
115	Engine & Drivetrain	EN 12005	AA	Chain set	Chain shield tab		1.56	1	0.02	1.54			1.56	193
116	Engine & Drivetrain	EN 12006	AA	Chain set	Centering pin		1.42	5	0.02	1.4			7.10	194
117	Engine & Drivetrain				Area Total				2930.68	1542.12	55.10	73.63	4601.52	
120	Frame & Body	FR A0001	AA		Frame		311.5	1	37.1	218.07		56.33	311.5	197
119	Frame & Body	FR 01001	AA	Frame	Bend Round Steel Tubing		19.90	1	11.8	8.1			19.90	198
120	Frame & Body	FR 01002	AA	Frame	Straight Round Steel Tubing		280.88	1	72.68	208.2			280.88	199
121	Frame & Body	FR 01003	AA	Frame	Anti-intusion Plate		10.64	1	3.55	7.09			10.64	200
122	Frame & Body	FR 01004	AA	Frame	Front Gusset Plate		2.59	2	0.45	2.14			5.18	201
123	Frame & Body	FR 01005	AA	Frame	Rear Gusset Plate		2.30	2	0.3	2			4.60	202
124	Frame & Body	FR 01006	AA	Frame	Suspension Gusset Plate		1.67	2	0.04	1.63			3.34	203
125	Frame & Body	FR 01007	AA	Frame	Tube Cove Diameter 24mm		1.55	2	0.02	1.53			3.10	204
126	Frame & Body	FR 01008	AA	Frame	Tube Cove Diameter 26mm		1.57	2	0.02	1.55			3.14	205
127	Frame & Body	FR 01009	AA	Frame	Tube Cove Diameter 28mm		1.59	4	0.03	1.56			6.36	206
128	Frame & Body	FR A0002	AA		Impact Atenuator		10.02	1		8.06	1.96		10.02	207
129	Frame & Body	FR 02001	AA	Impact Atenuator	Attenuator		45.57	1	12.77	32.8			45.57	208
130	Frame & Body	FR A0003	AA		Undertray and Wind Tunnel		15.39	1	0.11	6.91	4.37	4	15.39	209
131	Frame & Body	FR 03001	AA	Undertray and Wind Tunn	Undertray Front		172.87	1	101	71.72		0.15	172.87	210
132	Frame & Body	FR 03002	AA	Undertray and Wind Tunn	Undertray Middle		514.86	1	313.1	201.29		0.47	514.86	211
133	Frame & Body	FR 03003	AA	Undertray and Wind Tunn	Wind Tunnel - Upper		760.63	1	457.67	302.28		0.68	760.63	212
134	Frame & Body	FR 03004	AA	Undertray and Wind Tunn	Wind Tunnel - Sides		287.72	2	164	119.18		4.54	575.44	213
135	Frame & Body	FR 03005	AA	Undertray and Wind Tunn	Undertray Mount		1.67	12	0.03	1.64			20.04	214
136	Frame & Body	FR 03006	AA	Undertray and Wind Tunn	Carbon Equerre		6.38	1	3.77	2.52		0.09	6.38	215

Line Num.	Area of Commodity	Asm/Prt #	Rev. Lvl.	Asm	Component	Description	Unit Cost	Quantity	Material Cost	Process Cost	Fastener Cost	Tooling Cost	Total Cost	Details Page Number
137	Frame & Body	FR A0004	AA		Pedal Assembly		30.01	1	1.27	23.55	2.52	2.67	30.01	216
138	Frame & Body	FR 04001	AA	Pedal Assembly	Front Rails Mounts		2.04	4	0.12	1.92			8.16	219
139	Frame & Body	FR 04002	AA	Pedal Assembly	Rear Rails Mount		1.95	4	0.07	1.88			7.80	221
140	Frame & Body	FR 04003	AA	Pedal Assembly	Pedal Rail		15.15	2	0.45	14.7			30.30	223
141	Frame & Body	FR 04004	AA	Pedal Assembly	Throttle Pedal		11.96	1	2.49	9.47			11.96	225
142	Frame & Body	FR 04005	AA	Pedal Assembly	Throttle Pedal Bushing		1.42	2	0.01	1.41			2.84	227
143	Frame & Body	FR 04006	AA	Pedal Assembly	Throttle Pedal Axle		1.86	1	0.07	1.79			1.86	228
144	Frame & Body	FR 04007	AA	Pedal Assembly	Throttle Pedal Stop		4.47	1	0.76	3.71			4.47	229
145	Frame & Body	FR 04008	AA	Pedal Assembly	Throttle Pedal Stop Cylinder		1.33	1	0.03	1.3			1.33	231
146	Frame & Body	FR 04009	AA	Pedal Assembly	Throttle actuation brace		1.83	1	0.39	1.44			1.83	233
147	Frame & Body	FR 04010	AA	Pedal Assembly	Throttle Actuation		1.00	1	0.2	2.99			1.00	235
148	Frame & Body	FR 04011	AA	Pedal Assembly	Left Side Throttle Pedal Support		11.80	1	0.24	11.23		0.33	11.80	237
149	Frame & Body	FR 04012	AA	Pedal Assembly	Throttle Rocker		8.21	1	0.54	7.67			8.21	239
150	Frame & Body	FR 04013	AA	Pedal Assembly	Right Side Throttle Pedal Support		3.71	1	0.32	3.39			3.71	241
151	Frame & Body	FR 04014	AA	Pedal Assembly	Throttle Foot Support		4.83	2	0.97	3.86		0	9.66	243
152	Frame & Body	FR 04015	AA	Pedal Assembly	Brake Pedal		76.73	1	45.97	30.76			76.73	244
153	Frame & Body	FR 04016	AA	Pedal Assembly	Brake Pedal Bushing		1.42	2	0.01	1.41			2.84	246
154	Frame & Body	FR 04017	AA	Pedal Assembly	Ballance Bar Support		2.93	2	0.26	2.67			5.86	247
155	Frame & Body	FR 04018	AA	Pedal Assembly	Master Cylinder Bar		2.99	1	0.19	2.8			2.99	249
156	Frame & Body	FR 04019	AA	Pedal Assembly	Overtrave Swich Mount		2.44	1	0.16	2.28			2.44	251
157	Frame & Body	FR A0005	AA		Clutch actuation system		24.96	1	21.5	2.89	0.24	0.33	24.96	253
158	Frame & Body	FR 05001	AA	Clutch actuation system	Lever handle		4.65	1	1.21	3.44			4.65	254
159	Frame & Body	FR 05002	AA	Clutch actuation system	Lever Joint		9.53	1	0.56	2.3		6.67	9.53	256
160	Frame & Body	FR 05003	AA	Clutch actuation system	Lever Handle		10.10	1	0.63	2.8		6.67	10.10	257
161	Frame & Body	FR 05004	AA	Clutch actuation system	Actuation Lever		7.40	1	0.33	0.4		6.67	7.40	258
162	Frame & Body	FR 05005	AA	Clutch actuation system	Steel tube		1.71	1	0.05	1.66			1.71	259
163	Frame & Body	FR A0006	AA		Body		46.43	1	0.11	31.97	11.02	3.33	46.43	261
164	Frame & Body	FR 06001	AA	Body	Front Body		559.20	1	354.9	203.91		0.39	559.20	262
165	Frame & Body	FR 06002	AA	Body	Body Right Inlet		227.22	1	152.7	74.35		0.17	227.22	263
166	Frame & Body	FR 06003	AA	Body	Body Left Inlet		227.22	1	152.7	74.35		0.17	227.22	264
167	Frame & Body	FR 06004	AA	Body	Body Plates		158.62	2	88.55	70.04		0.03	317.24	265
168	Frame & Body	FR 06005	AA	Body	Body Mounts		0.50	12	0.03	0.47			6.00	266
169	Frame & Body	FR 06006	AA	Body	Body Plates Mounts		0.15	41	0.01	0.14			6.15	267
170	Frame & Body				Area Total				2263.04	2064.23	20.11	98.26	4443.45	
171	Electrical	EL A0001	AA		Battery Assembly		88.91	1	73.55	12.66	0.7	2	88.91	269
172	Electrical	EL 01001	AA	Battery Assembly	Side Battery Mount		3.13	2	0.23	2.9	0	0	6.26	271
173	Electrical	EL 01002	AA	Battery Assembly	Main Battery Mount		3.78	1	0.84	2.94	0	0	3.78	273
174	Electrical	EL 01003	AA	Battery Assembly	Front Tab		1.56	1	0.02	1.54	0	0	1.56	275
175	Electrical	EL 01004	AA	Battery Assembly	Rear Tab		1.56	1	0.01	1.55	0	0	1.56	277
176	Electrical	EL 01005	AA	Battery Assembly	Master Switch Mount		2.81	1	0.51	2.3	0	0	2.81	279
177	Electrical	EL A0002	AA		Forward Harness Wiring		36.56	1	27.6	8.39	0.24	0.33	36.56	280
178	Electrical	EL 02001	AA	Forward Harness Wiring	Ground Tab		1.55	1	0.01	1.54	0	0	1.55	281
179	Electrical	EL A0003	AA		Rear Firewall		1 116.38	1	957	158.51	0.87	0	1116.38	283
180	Electrical	EL A0004	AA		Monitoring System		39.07	1	0	30.54	3.86	4.67	39.07	285
181	Electrical	EL 04001	AA	Monitoring System	Sensors		192.37	1	174.15	18.22	0	0	192.37	286
182	Electrical	EL 04002	AA	Monitoring System	Data Logging		282.99	1	165.7	117.12	0.17	0	282.99	287
183	Electrical	EL 04003	AA	Monitoring System	Dashboard		106.79	1	69.15	37.47	0.15	0.02	106.79	288
184	Electrical	EL 04004	AA	Monitoring System	Welded Tabs		5.88	1	1.16	4.72	0	0	5.88	291
185	Electrical	EL 04005	AA	Monitoring System	Sensors Tabs		69.45	1	0.1	69.35	0	0	69.45	299
186	Electrical	EL A0005	AA		Shifting System Wiring Harness		58.41	1	31.85	26.56	0	0	58.41	300
187	Electrical	EL 05001	AA	Shifting System Wiring Ha	Paddles Connector Mount		1.93	1	0.04	1.89	0	0	1.93	301
188	Electrical	EL A0006	AA		Gearbox Actuator Wiring Harness		48.18	1	20.5	27.68	0	0	48.18	302
189	Instruments & Wiring				Area Total				1522.65	528.78	5.99	7.02	2064.44	

Line Num.	Area of Commodity	Asm/Prt #	Rev. Lvl.	Asm	Component	Description	Unit Cost	Quantity	Material Cost	Process Cost	Fastener Cost	Tooling Cost	Total Cost	Details Page Number
190	Miscellaneous, Fit & Finish	MS A0001	AA		Firewall		$ 138.09	1	$ 0.05	$ 16.35	1.08	8.67	138.087	304
191	Miscellaneous, Fit & Finish	MS 01001	AA	Firewall	Firewall Main Plate		$ 16.91	1	$ 6.07	$ 10.84	0	0.00	16.912	305
192	Miscellaneous, Fit & Finish	MS 01002	AA	Firewall	Firewall Bottom Side Plate		$ 4.93	2	$ 0.73	$ 4.20	0	0.00	9.852	307
193	Miscellaneous, Fit & Finish	MS 01003	AA	Firewall	Firewall Top Side Plate		$ 5.73	2	$ 1.08	$ 4.65	0	0.00	11.469	309
194	Miscellaneous, Fit & Finish	MS 01004	AA	Firewall	Firewall Hole Plate		$ 6.55	1	$ 0.38	$ 6.16	0	0.00	6.547	311
195	Miscellaneous, Fit & Finish	MS 01005	AA	Firewall	Firewall Top Plate		$ 7.62	1	$ 1.21	$ 6.41	0	0.00	7.622	313
196	Miscellaneous, Fit & Finish	MS 01006	AA	Firewall	Firewall Bottom Radiator Plate		$ 3.56	1	$ 0.51	$ 3.05	0	0.00	3.562	315
197	Miscellaneous, Fit & Finish	MS 01007	AA	Firewall	Firewall Top Radiator Plate		$ 10.30	1	$ 0.83	$ 9.47	0	0.00	10.301	317
198	Miscellaneous, Fit & Finish	MS 01008	AA	Firewall	Firewall Tab		$ 1.76	26	$ 0.01	$ 1.75	0	0.00	45.672	319
199	Miscellaneous, Fit & Finish	MS A0002	AA		Harness		$ 60.09	1	$ 46.15	$ 8.57	3.041778021	0.67	60.094	321
200	Miscellaneous, Fit & Finish	MS 02001	AA	Harness	Harness Tabs		$ 0.84	2	$ 0.09	$ 0.74	0	0.00	1.670	322
201	Miscellaneous, Fit & Finish	MS A0003	AA		Headrest		$ 55.15	1	$ 11.47	$ 30.06	1.287304954	1.33	55.152	324
202	Miscellaneous, Fit & Finish	MS 03001	AA	Headrest	Headrest Plate		$ 7.17	1	$ 2.60	$ 4.57	0	0.00	7.174	325
203	Miscellaneous, Fit & Finish	MS 03002	AA	Headrest	Headrest Top Tabs		$ 0.94	2	$ 0.02	$ 0.91	0	0.00	1.871	327
204	Miscellaneous, Fit & Finish	MS 03003	AA	Headrest	Headrest Bottom Tabs		$ 0.98	2	$ 0.02	$ 0.96	0	0.00	1.956	329
205	Miscellaneous, Fit & Finish	MS A0004	AA		Safety		$ 9.25	1	$ -	$ 0.25	0	0.00	9.250	330
206	Miscellaneous, Fit & Finish	MS 04001	AA	Safety	Roll Bar Padding		$ 4.50	2	$ 1.50	$ 3.00	0	0.00	9.000	331
207	Miscellaneous, Fit & Finish	MS A0005	AA		Seat		$ 231.34	1	$ 2.55	$ 8.93	2.191284996	2.67	231.342	332
208	Miscellaneous, Fit & Finish	MS 05001	AA	Seat	Seat		$ 208.13	1	$ 160.80	$ 46.00	0	1.33	208.133	333
209	Miscellaneous, Fit & Finish	MS 05002	AA	Seat	Lower Seat Tabs		$ 1.28	2	$ 0.07	$ 1.21	0	0.00	2.560	334
210	Miscellaneous, Fit & Finish	MS 05003	AA	Seat	Back Seat Tabs		$ 2.16	2	$ 0.06	$ 2.10	0	0.00	4.3149876	336
211	Miscellaneous, Fit & Finish				Area Total				239.94	231.72	7.60	14.67	842.54	
212	Steering System	ST A0001	AA		Steering column		63.76	1	55.22	2.88	0.66	5	63.76	339
213	Steering System	ST 01001	AA	Steering column	Steering wheel mount		10.52	1	1.96	7.23		1.33	10.52	340
214	Steering System	ST 01002	AA	Steering column	First colum tube		4.69	1	0.1	4.59			4.69	341
215	Steering System	ST 01003	AA	Steering column	Second column tube		1.39	1	0.39	1			1.39	342
216	Steering System	ST 01004	AA	Steering column	Sleeve		4.38	2	2.35	2.03			8.76	343
213	Steering System	ST A0002	AA		Steering rack assembly		5.27	1	0.5	1.52	1.92	1.33	5.27	345
218	Steering System	ST 02001	AA	Steering rack assembly	Rack		3.61	1	1.66	1.95			3.61	347
219	Steering System	ST 02002	AA	Steering rack assembly	Rack pinion		10.32	1	1.77	8.55			10.32	348
220	Steering System	ST 02003	AA	Steering rack assembly	Rack housing		14.79	1	4.2	3.92		6.67	14.79	349
221	Steering System	ST 02004	AA	Steering rack assembly	Lower rack mount		3.52	2	0.51	3.01			7.04	350
222	Steering System	ST 02005	AA	Steering rack assembly	Mounts hold		2.35	4	0.04	2.31			9.40	351
223	Steering System	ST 02006	AA	Steering rack assembly	Upper rack mount		2.23	2	0.02	2.21			4.46	352
224	Steering System	ST 02007	AA	Steering rack assembly	Rack stop		4.13	2	0.42	3.71			8.26	354
225	Steering System	ST 02008	AA	Steering rack assembly	Mounts hold		2.33	4	0.02	2.31			9.32	356
226	Steering System	ST A0003	AA		Quick release		5.76	1	4	1.25	0.18	0.33	5.76	357
227	Steering System	ST 03001	AA	Quick release	Quick release mount		5.99	1	0.63	5.36			5.99	358
228	Steering System	ST 03002	AA	Quick release	Quick release sliding part		11.04	1	2.44	8.6			11.04	359
229	Steering System	ST 03003	AA	Quick release	Quick release fixed part		9.74	1	2.44	7.3			9.74	360
230	Steering System	ST A0004	AA		Tie rod assembly		7.50	2	3.88	3.22	0.4		15.00	361
231	Steering System	ST 04001	AA	Tie rod assembly	Tie rod tube		15.07	1	13.37	1.7			15.07	362
232	Steering System	ST 04002	AA	Tie rod assembly	Upright Tapered Spacer		1.66	4	0.01	1.65			6.64	363
233	Steering System	ST 04003	AA	Tie rod assembly	Rack tapered spacer		1.66	4	0.01	1.65			6.64	364
234	Steering System	ST 04004	AA	Tie rod assembly	Tie rod insert		2.95	4	1	1.95			11.80	365

Line Num.	Area of Commodity	Asm/Prt #	Rev. Lvl.	Asm	Component	Description	Unit Cost	Quantity	Material Cost	Process Cost	Fastener Cost	Tooling Cost	Total Cost	Details Page Number
235	Steering System				Area Total				107.36	123.69	3.56	14.66	249.27	
236	Suspension	SU A0001	AA		Lower Front A-Arm		125.74	2	20.86	15.81	0.8	1.33	251.48	368
237	Suspension	SU 01001	AA	Lower Front A-Arm	Simple Insert		3.86	2	0.33	3.53			7.72	369
238	Suspension	SU 01002	AA	Lower Front A-Arm	Insert		11.99	1	1.71	10.27			11.99	371
239	Suspension	SU 01003	AA	Lower Front A-Arm	Cylinder		0.66	2	0.26	0.4			1.32	373
240	Suspension	SU 01004	AA	Lower Front A-Arm	Front Lower Front A-Arm Carbon Tube		13.81	1	12.25	1.56			13.81	374
241	Suspension	SU 01005	AA	Lower Front A-Arm	Rear Lower Front A-Arm Carbon Tube		14.19	1	12.58	1.6			14.19	375
242	Suspension	SU 01006	AA	Lower Front A-Arm	Spacer		1.67	4	0.01	1.66			6.68	376
243	Suspension	SU 01007	AA	Lower Front A-Arm	Front Lower Front A-Arm mount		6.35	1	0.43	5.91			6.35	377
244	Suspension	SU 01008	AA	Lower Front A-Arm	Rear Lower Front A-Arm Mount		6.45	1	0.43	6.02			6.45	379
245	Suspension	SU A0002	AA		Upper Front A-Arm		94.94	2	20.86	15.81	0.4	1.33	189.88	381
246	Suspension	SU 02001	AA	Upper Front A-Arm	Simple Insert		3.86	2	0.33	3.53			7.72	382
247	Suspension	SU 02002	AA	Upper Front A-Arm	Double Upper Front insert		5.36	1	0.57	4.79			5.36	384
248	Suspension	SU 02003	AA	Upper Front A-Arm	Cylinder		0.66	2	0.26	0.4			1.32	386
249	Suspension	SU 02004	AA	Upper Front A-Arm	Front Upper Front A-Arm Tube		9.88	1	8.76	1.12			9.88	387
250	Suspension	SU 02005	AA	Upper Front A-Arm	Rear Upper Front A-Arm Tube		10.09	1	8.95	1.14			10.09	388
251	Suspension	SU 02006	AA	Upper Front A-Arm	Spacer		1.67	4	0.01	1.66			6.68	389
252	Suspension	SU 02007	AA	Upper Front A-Arm	Front Upper Front A-Arm Mount		6.47	1	0.43	6.03			6.47	390
253	Suspension	SU 02008	AA	Upper Front A-Arm	Rear Upper Front A-Arm mount		6.45	1	0.43	6.02			6.45	392
254	Suspension	SU A0003	AA		Lower Rear A-Arm		90.33	2	20.86	16.28	0.8	1.33	180.66	394
255	Suspension	SU 03001	AA	Lower Rear A-Arm	Simple Insert		3.86	2	0.33	3.53			7.72	395
256	Suspension	SU 03002	AA	Lower Rear A-Arm	Double Lower Rear Insert		6.82	1	0.48	6.34			6.82	397
257	Suspension	SU 03003	AA	Lower Rear A-Arm	Cylinder		0.66	2	0.26	0.4			1.32	399
258	Suspension	SU 03004	AA	Lower Rear A-Arm	Front Lower Rear A-Arm tube		9.12	1	8.09	1.03			9.12	400
259	Suspension	SU 03005	AA	Lower Rear A-Arm	Rear Lower Rear A-Arm tube		11.82	1	10.49	1.34			11.82	401
260	Suspension	SU 03006	AA	Lower Rear A-Arm	Spacer		1.67	4	0.01	1.66			6.68	402
261	Suspension	SU 03007	AA	Lower Rear A-Arm	Front Lower Rear A-Arm Mount		6.33	1	0.43	5.9			6.33	403
262	Suspension	SU 03008	AA	Lower Rear A-Arm	Rear Lower Rear A-Arm Mount		6.33	1	0.43	5.9			6.33	405
263	Suspension	SU A0004	AA		Upper Rear A-Arm		97.66	2	20.86	16.28	0.8	1.33	195.32	407
264	Suspension	SU 04001	AA	Upper Rear A-Arm	Simple Insert		3.86	2	0.33	3.53			7.72	408
265	Suspension	SU 04002	AA	Upper Rear A-Arm	Double Lower Rear Insert		11.68	1	1.65	10.03			11.68	410
266	Suspension	SU 04003	AA	Upper Rear A-Arm	Cylinder		0.66	2	0.26	0.4			1.32	412
267	Suspension	SU 04004	AA	Upper Rear A-Arm	Front Lower Rear A-Arm Tube		9.12	1	8.09	1.03			9.12	413
268	Suspension	SU 04005	AA	Upper Rear A-Arm	Rear Lower Rear A-Arm Tube		7.90	1	7	0.89			7.90	414
269	Suspension	SU 04006	AA	Upper Rear A-Arm	Spacer		1.67	4	0.01	1.66			6.68	415
270	Suspension	SU 04007	AA	Upper Rear A-Arm	Front Upper Rear A-Arm Mount		6.41	1	0.43	5.97			6.41	416
271	Suspension	SU 04008	AA	Upper Rear A-Arm	Rear Upper Rear A-Arm Mount		6.32	1	0.43	5.89			6.32	418
272	Suspension	SU A0005	AA		Front Suspension		347.75	2	0.5	3.73	1.4	0.67	695.50	420
273	Suspension	SU 05001	AA	Front Suspension	Dampers		305.00	1	305				305.00	421
274	Suspension	SU 05002	AA	Front Suspension	Springs		25.00	1	25				25.00	422
275	Suspension	SU 05003	AA	Front Suspension	Front Suspension Mount		8.12	1	0.61	7.51			8.12	423
276	Suspension	SU 05004	AA	Front Suspension	Spacer		1.67	2	0.01	1.66			3.34	425
277	Suspension	SU A0006	AA		Front Rocker		43.64	2	0.19	2.41	0.56	0.67	87.28	426
278	Suspension	SU 06001	AA	Front Rocker	Sheets metal of the rocker		5.45	2	0.57	4.88			10.90	427
279	Suspension	SU 06002	AA	Front Rocker	Cylinder		2.07	2	0.2	1.87			4.14	429
280	Suspension	SU 06003	AA	Front Rocker	Bushing		1.32	2	0.01	1.31			2.64	430
281	Suspension	SU 06004	AA	Front Rocker	Rocker mount		8.13	1	0.88	7.26			8.13	431
282	Suspension	SU 06005	AA	Front Rocker	Push-rod tube		17.48	1	15.5	1.98			17.48	433
283	Suspension	SU 06006	AA	Front Rocker	Push-rod insert		2.95	2	1	1.95			5.90	434
284	Suspension	SU A00007	AA		Rear Suspension		365.54	2	10	3.15	1.4	0.67	731.08	436
285	Suspension	SU 07001	AA	Rear Suspension	Dampers		305.00	1	305				305.00	437
286	Suspension	SU 07002	AA	Rear Suspension	Springs		25.00	1	25				25.00	438
287	Suspension	SU 07003	AA	Rear Suspension	Rear Suspension Mount		7.99	1	0.88	7.11			7.99	439
288	Suspension	SU 07004	AA	Rear Suspension	Spacer		1.67	2	0.01	1.66			3.34	441

Line Num.	Area of Commodity	Asm/Prt #	Rev. Lvl.	Asm	Component	Description	Unit Cost	Quantity	Material Cost	Process Cost	Fastener Cost	Tooling Cost	Total Cost	Details Page Number
289	Suspension	SU A0008	AA		Rear Rocker		39.47	2	4.08	5.64	0.56	0.67	78.94	442
290	Suspension	SU 08001	AA	Rear Rocker	Sheets metal of the rocker		5.67	2	0.67	5			11.34	443
291	Suspension	SU 08002	AA	Rear Rocker	Cylinder		2.07	1	0.2	1.87			2.07	445
292	Suspension	SU 08003	AA	Rear Rocker	Bushing		1.32	2	0.01	1.31			2.64	446
293	Suspension	SU 08004	AA	Rear Rocker	Rocker mount		14.23	1	7.11	7.11			14.23	447
294	Suspension	SU 08005	AA	Rear Rocker	Push-rod tube		6.46	1	5.73	0.73			6.46	449
295	Suspension	SU 08006	AA	Rear Rocker	Push-rod insert		2.95	2	1	1.95			5.90	450
296	Suspension	SU A0009	AA		Rear Tie-rod		35.69	2	3.88	4.51	0.4	0.67	71.38	452
297	Suspension	SU 09001	AA	Rear Tie-rod	Tie-rod mount		8.12	1	0.61	7.51			8.12	453
298	Suspension	SU 09002	AA	Rear Tie-rod	Tie-rod tube		12.20	1	10.82	1.38			12.20	455
299	Suspension	SU 09003	AA	Rear Tie-rod	Tie-rod insert		2.95	2	1	1.95			5.90	456
300	Suspension	SU A0010	AA		Front Anti Roll System		39.48	1	10	7.68	0.47	2	39.48	458
301	Suspension	SU 10001	AA	Front Anti Roll System	Front sway bar		7.98	1	2.45	4.7	0.83		7.98	459
302	Suspension	SU 10002	AA	Front Anti Roll System	Front lever		2.06	2	0.16	1.9			4.12	460
303	Suspension	SU 10003	AA	Front Anti Roll System	Front Roll bar mount inf		1.37	2	0.07	1.3			2.74	462
304	Suspension	SU 10004	AA	Front Anti Roll System	Front Roll bar mount sup		4.58	2	0.089	3.69			9.16	464
305	Suspension	SU 10005	AA	Front Anti Roll System	Bushing		1.32	4	0.01	1.31			5.28	466
306	Suspension	SU 10006	AA	Front Anti Roll System	Push-rod tube		13.02	1	11.54	1.48			13.02	467
307	Suspension	SU 10007	AA	Front Anti Roll System	Push-rod insert		2.75	2	0.8	1.95			5.50	468
308	Suspension	SU A0011	AA		Rear Anti Roll System		58.70	1	0.03	7.62	0.47	2	58.70	470
309	Suspension	SU 11001	AA	Rear Anti Roll System	Rear Sway bar		7.52	1	2.45	5.07			7.52	471
310	Suspension	SU 11002	AA	Rear Anti Roll System	Rear lever		1.99	2	0.12	1.87			3.98	472
311	Suspension	SU 11003	AA	Rear Anti Roll System	Rear Roll bar mount inf		1.99	2	0.06	1.93			3.98	474
312	Suspension	SU 11004	AA	Rear Anti Roll System	Rear roll bar mount sup		5.65	2	1.24	4.41			11.30	476
313	Suspension	SU 11005	AA	Rear Anti Roll System	Bushing		1.32	2	0.01	1.31			2.64	478
314	Suspension	SU 11006	AA	Rear Anti Roll System	Push-rod tube		2.74	1	2.43	0.31			2.74	479
315	Suspension	SU 11007	AA	Rear Anti Roll System	Push-rod insert		2.75	2	0.8	1.95			5.50	480
316	Suspension	SU A0012	AA		Front uprights Assembly		8.76	2	0	7.82	0.94		17.52	482
317	Suspension	SU 12001	AA	Front uprights assembly	Front uprights		48.84	1	11.82	37.02			48.84	483
318	Suspension	SU 12002	AA	Front uprights assembly	Steering tab		4.86	1	0.98	3.88			4.86	485
319	Suspension	SU 12003	AA	Front uprights assembly	Upper tab		3.24	1	0.39	2.85			3.24	487
320	Suspension	SU 12004	AA	Front uprights assembly	Camber adjustement shims		1.70	2	0.15	1.55			3.40	489
321	Suspension	SU 12005	AA	Front uprights assembly	Lower spacer		1.33	2	0.01	1.32			2.66	490
322	Suspension	SU 12006	AA	Front uprights assembly	Upper spacer		1.37	2	0.03	1.34			2.74	491
323	Suspension	SU A0013	AA		Rear uprights Assembly		112.13	2	0	9.07	1.08		224.26	492
324	Suspension	SU 13001	AA	Rear uprights Assembly	Rear Upright		85.67	1	21	64.67			85.67	493
325	Suspension	SU 13002	AA	Rear uprights Assembly	Upper Tab		3.70	1	0.53	3.17			3.70	495
326	Suspension	SU 13003	AA	Rear uprights Assembly	Camber adjustment shims		1.76	2	0.21	1.55			3.52	497
327	Suspension	SU 13004	AA	Rear uprights Assembly	Lower spacer		1.33	2	0.01	1.32			2.66	498
328	Suspension	SU 13005	AA	Rear uprights Assembly	Upper spacer		1.37	4	0.03	1.34			5.48	499
329	Suspension & Shocks				Area Total				1075.72	641.17	20.05	21.34	4110.32	
330	Wheels & Tires	WT A0001	AA		Wheel Assembly		8.91	4	4	3.31	1.6		35.64	501
331	Wheels & Tires	WT 01001	AA	Wheel assembly	Wheel		77.50	4	77.5				310.00	502
332	Wheels & Tires	WT 01002	AA	Wheel assembly	Tire		85.00	4	85				340.00	503
333	Wheels & Tires	WT 01003	AA	Wheel assembly	Valve stem		1.00	4	1				4.00	504
334	Wheels & Tires	WT A0002	AA		Front Hubs		379.02	2	18.26	5.33	13.48		758.04	505
335	Wheels & Tires	WT 02001	AA	Front Hubs	Front Hubs		68.21	1	15.76	52.45			68.21	506
336	Wheels & Tires	WT 02002	AA	Front Hubs	Bearing		122.39	2	0				244.78	508
337	Wheels & Tires	WT 02003	AA	Front Hubs	Front Spacer		28.56	1	6.69	21.87			28.56	510
338	Wheels & Tires	WT A0003	AA		Rear Hubs		400.12	2	18.26	5.33	13.48		800.24	512
339	Wheels & Tires	WT 03001	AA	Rear Hubs	Rear Hub		83.59	1	19.26	64.33			83.59	513
340	Wheels & Tires	WT 03002	AA	Rear Hubs	Bearing		122.59	2	122.59				245.18	515
341	Wheels & Tires	WT 03003	AA	Rear Hubs	Rear Spacer		34.27	1	8.23	26.04			34.27	516
342	Wheels & Tires				Area Total				1038.16	199.25	60.32	0.00	2952.51	
	Vehicle Total				Total				**10 205.76**	**5 472.71**	**178.79**	**230.25**	**20 440.75**	

ÉCOLE CENTRALE LYON

BRAKE SYSTEM

EPSA TEAM

CAR # 81

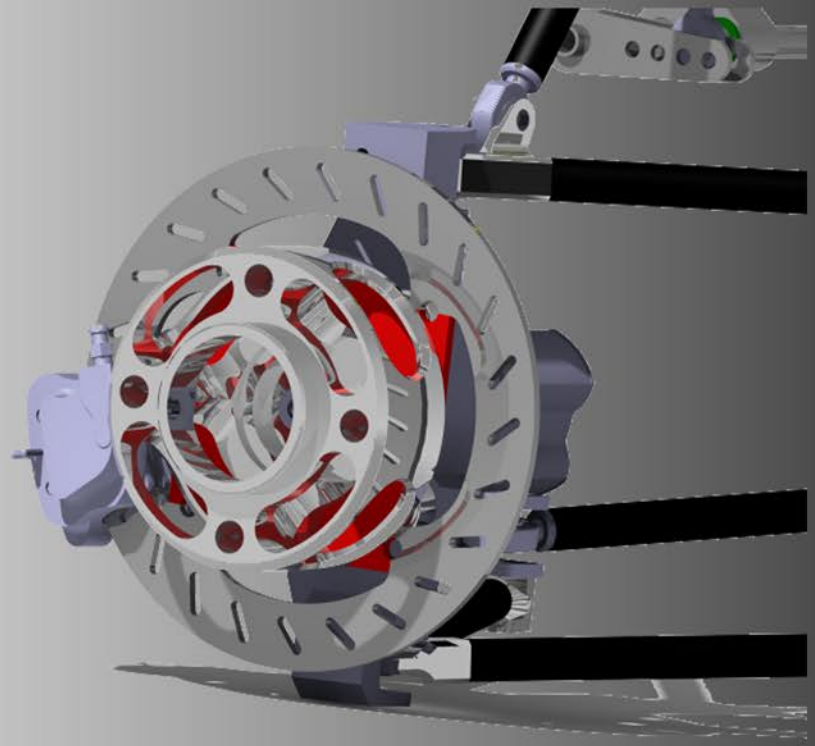

Ecurie Piston Sport Auto

University	Ecole Cenrale de Lyon	**Car #**	81	**Asm Cost**	$ 105,95
System	Brake System			**Qty**	2
Assembly	Front brake rotor	**FileLink1**			
P/N Base	BR A0001	**FileLink2**		**Extended Cost**	$ 211,90
Suffix	AA	**FileLink3**			
Details	Front brake Rotor Assembly				

ItemOrder	Part	Part Cost	Quantity	Sub Total
10	Brake Rotor	$ 6,03	1	$ 6,03
20	Brake Shrink Disc	$ 4,67	1	$ 4,67
30	Brake Caliper	$ 83,00	1	$ 83,00
40	Brake pad	$ 0,96	2	$ 1,92
50	Brake Rotor button	$ 1,34	5	$ 6,70
			Sub Total	**$ 102,32**

ItemOrder	Process	Use	UnitCost	Unit	Quantity	Multiplier	Mult. Val.	Sub Total
10	Assemble,1kg, Line on Line	Line up Pads	$ 0,13	unit	2			$ 0,26
20	Assemble, 1 kg, Loose	Put caliper in place	$ 0,06	unit	1			$ 0,06
30	Ratchet <= 25.4 mm	Bolt caliper to upright	$ 0,75	unit	2			$ 1,50
40	Assemble,1kg, Line on Line	Assemble Brake Rotors and Shrink discs	$ 0,13	Unit	1			$ 0,13
50	Assemble,1kg, Loose	Insert buttons and washers	$ 0,06	Unit	5			$ 0,30
60	Assemble,1kg, Line on Line	Retaining rings	$ 0,13	Unit	5			$ 0,65
70	Assemble,1kg, Line on Line	Assemble Brake Rotor onto hub	$ 0,13	Unit	1			$ 0,13
							Sub Total	**$ 3,03**

ItemOrder	Fastener	Use	UnitCost	Size1	Unit1	Size2	Unit2	Quantity	Sub Total
10	Bolt,Grade 8.8 (SAE)	Calipers in Uprights	$ 0,14	8	mm	35	mm	2	$ 0,28
20	Washer, Grade 8.8 (SAE 5)	Calipers in Uprights	$ 0,01	8	mm			2	$ 0,02
30	Washer, Grade 8.8 (SAE 5)	Assemble Brake Rotors and Shrink discs	$ 0,01	12	mm			10	$ 0,10
40	Retaining Ring, External	Assemble Brake Rotors and Shrink discs	$ 0,04	12	mm			5	$ 0,20
								Sub Total	**$ 0,60**

University	Ecole Centrale de Lyon			**Car #**	81	**Part Cost**	$ 7,36
System	Brake system	**FileLink1**				**Qty**	2
Assembly	Front brake Rotor	**FileLink2**		**FileLink1**			
Part	Brake Rotor	**FileLink3**		**FileLink2**		**Extended Cost**	$ 14,72
P/N Base	BR 01001			**FileLink3**			
Suffix	AA						
Details	Cast iron brake disc						

ItemOrder	Material	Use	UnitCost	Size1	Unit1	Size2	Unit2	Area Name	Area	Length	Density	Quantity	Sub Total
10	Cast Iron (per kg)	Stock material for brake rotor	$ 1,00	98,5	mm			circle area	3,05E-02	0,005	7 000	0,96	$ 0,96
												Sub Total	**$ 0,96**

ItemOrder	Process	Use	UnitCost	Unit	Quantity	Multiplier	Mult. Val.	Sub Total
10	Machining Setup, Install and remove	Setup for laser cut	$ 1,30	unit	1			$ 1,30
20	Laser Cut	Cutout shape	$ 0,01	cm	204	Material - Cast Iron	2,5	$ 5,10
							Sub Total	**$ 6,40**

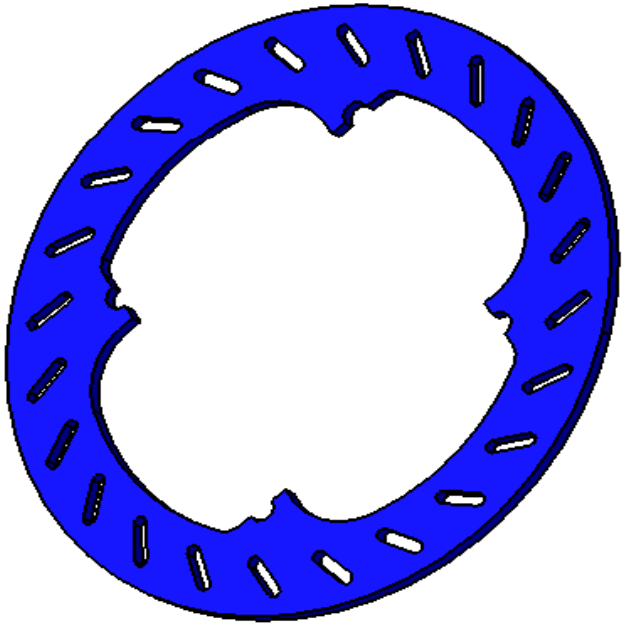

tolérances générales ISO 2768 - mk

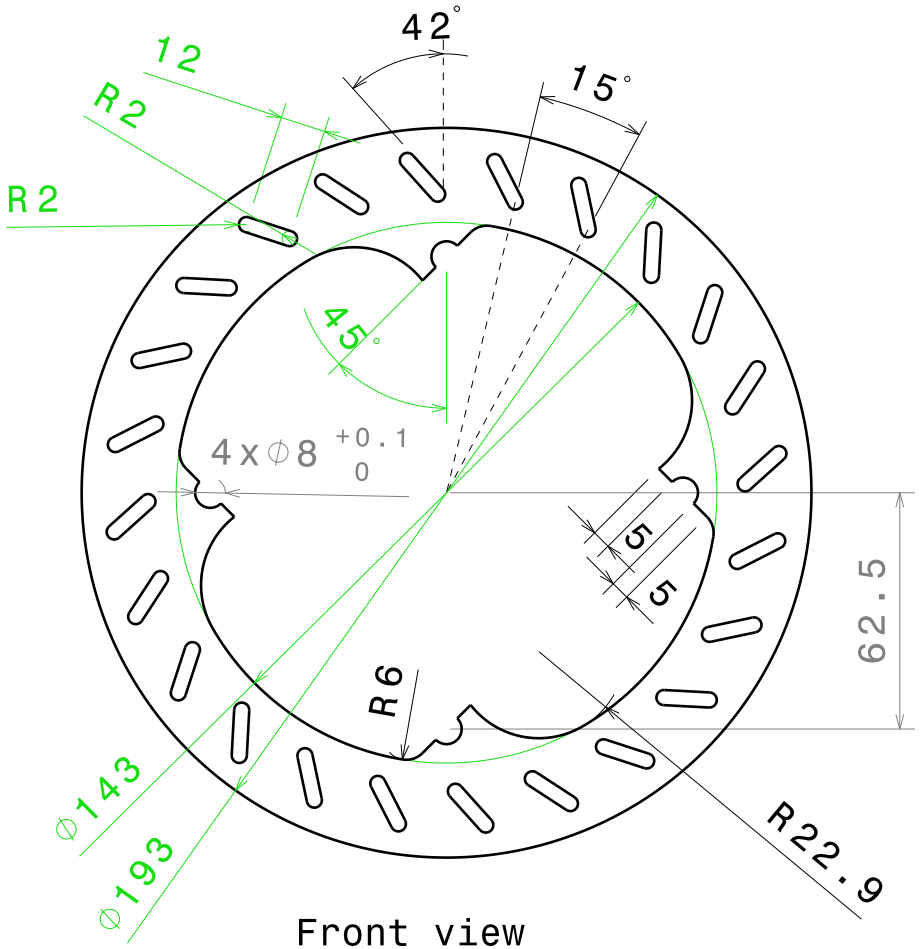

Front view
Scale: 1:2

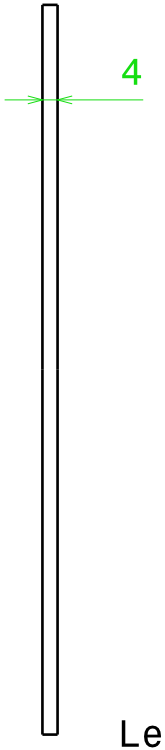

Left view
Scale: 1:2

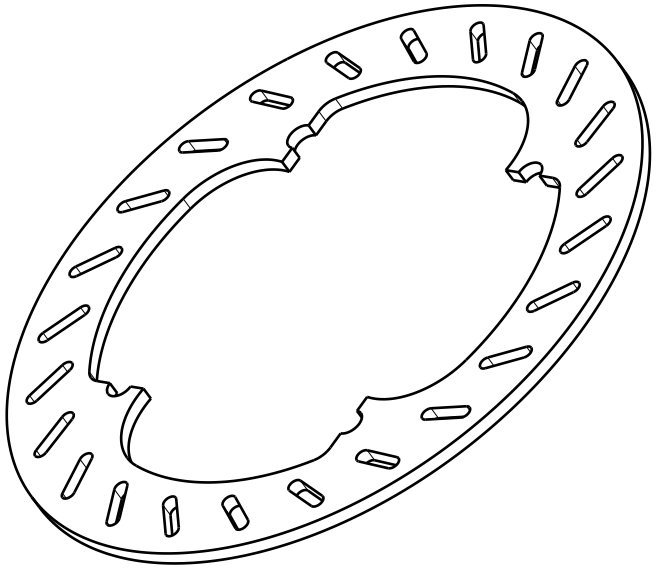

Isometric view
Scale: 1:2

Taille A4		Ecurie Piston Sport Auto
Dessiné par Albert	Date 16/12/2014	Désignation Piste de frein
Coordonnées albert.vinaixa-verges@el13.ec-lyon.fr 0616717112		Quantité 6 / Matériau Fonte Grise G10 / Version 1.0
Plan vérifié par PMR 13		Echelle 1:2 / Numéro du plan 15-M-036 / Feuille 1/1

University	Ecole Centrale de Lyon			**Car #**	81	**Part Cost**	$ 4,67
System	Brake system	**FileLink1**				**Qty**	2
Assembly	Front brake Rotor	**FileLink2**		**FileLink1**			
Part	Brake Shrink Disc	**FileLink3**		**FileLink2**		**Extended Cost**	$ 9,34
P/N Base	BR 01002			**FileLink3**			
Suffix	AA						
Details	Allows brake rotor to be mounted floating						

ItemOrder	Material	Use	UnitCost	Size1	Unit1	Size2	Unit2	Area Name	Area	Length	Density	Quantity	Sub Total
10	Steel, Mild (per kg)	Stock material for brake shrink disc	$ 2,25	140	mm			circle area	1,54E-02	0,005	7860	0,60	$ 1,36
												Sub Total	**$ 1,36**

ItemOrder	Process	Use	UnitCost	Unit	Quantity	Multiplier	Mult. Val.	Sub Total
10	Machining Setup, Install and remove	Setup for laser cut	$ 1,30	unit	1			$ 1,30
20	Laser Cut	Cutout shape	$ 0,01	cm	67	Material - Cast Iron	3	$ 2,01
							Sub Total	**$ 3,31**

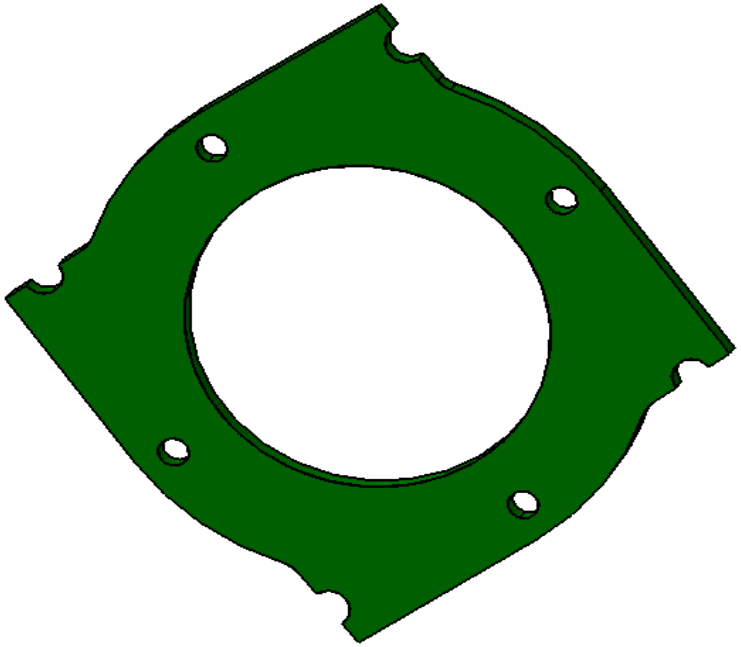

tolérances générales ISO 2768 - mk

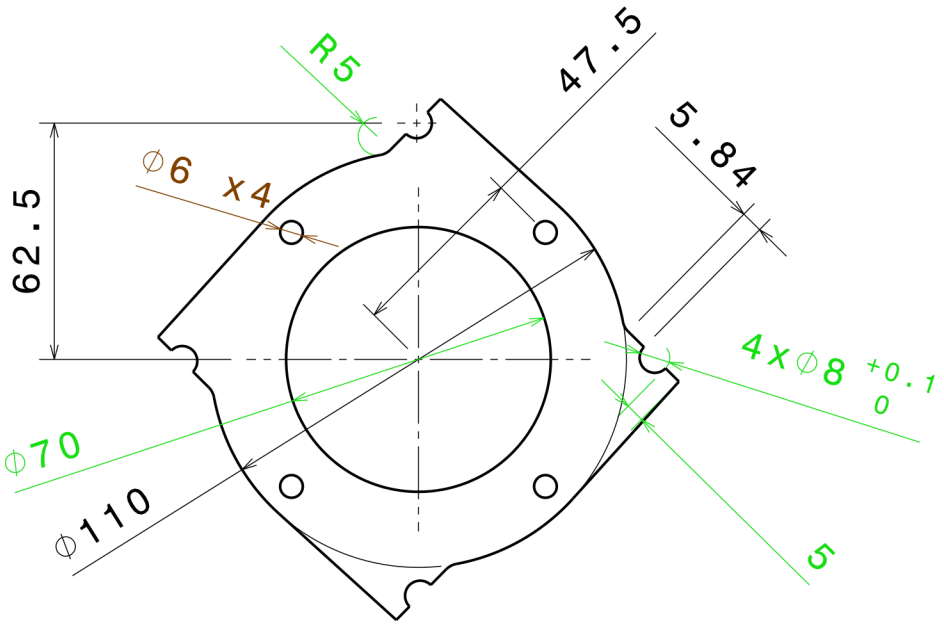

Front view
Scale: 1:2

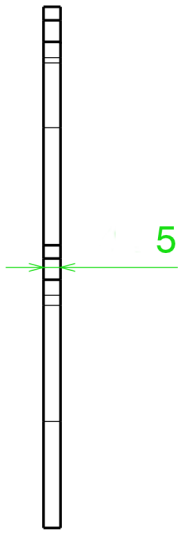

Left view
Scale: 1:2

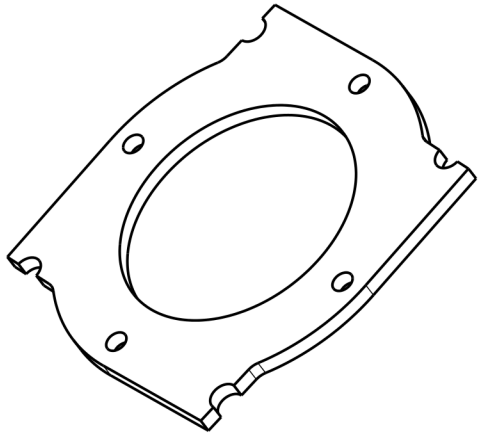

Isometric view
Scale: 1:2

Taille A4		Ecurie Piston Sport Auto	
Dessiné par Albert Vinaixa	Date 16/12/2014	Désignation Frette de disque	
Coordonnées 0616717112 albert.vinaixa-verges@ecl13.ec-lyon.fr		Quantité 6	Matériau Aluminium 2017	Version 1.1
Plan vérifié par PMR 15		Echelle 1:2	Numéro du plan 15-B-043	Feuille 1/1

University	Ecole Centrale de Lyon			**Car #**	81	**Part Cost**	$ 83,00
System	Brake system	**FileLink1**				**Qty**	2
Assembly	Front brake Rotor	**FileLink2**		**FileLink1**			
Part	Brake Caliper	**FileLink3**		**FileLink2**		**Extended Cost**	$ 166,00
P/N Base	BR 01003			**FileLink3**			
Suffix	AA						
Details	Beringer 2D1						

ItemOrder	Material	Use	UnitCost	Size1	Unit1	Size2	Unit2	Area Name	Area	Length	Density	Quantity	Sub Total
10	Brake Caliper, Beringer, 2D1	Brake Caliper	$ 83,00									1	$ 83,00
												Sub Total	**$ 83,00**

University	Ecole Centrale de Lyon			**Car #**	81	**Part Cost**	$ 0,96
System	Brake system	**FileLink1**				**Qty**	4
Assembly	Front brake Rotor	**FileLink2**		**FileLink1**			
Part	Brake pad	**FileLink3**		**FileLink2**		**Extended Cost**	$ 3,84
P/N Base	BR 01004			**FileLink3**			
Suffix	AA						
Details	Beringer 2547S						

ItemOrder	Material	Use	UnitCost	Size1	Unit1	Size2	Unit2	Area Name	Area	Length	Density	Quantity	Sub Total
10	Brake Pad, Iron or Steel Rotor	Brake pad	$ 0,0002	40	mm	40	mm	Rectangular area	1,60E-03	0,003		1	$ 0,96
												Sub Total	**$ 0,96**

University	Ecole Centrale de Lyon			**Car #**	81	**Part Cost**	$ 1,34
System	Brake system	**FileLink1**				**Qty**	10
Assembly	Front brake Rotor	**FileLink2**		**FileLink1**			
Part	Brake rotor button	**FileLink3**		**FileLink2**		**Extended Cost**	$ 13,45
P/N Base	BR 01005			**FileLink3**			
Suffix	AA						
Details	Button used to assemble floating rotor on shrink disc						

ItemOrder	Material	Use	UnitCost	Size1	Unit1	Size2	Unit2	Area Name	Area	Length	Density	Quantity	Sub Total
10	Steel, Mild	Material for part	$ 2,25	7	mm			Round, radius 7mm	1,13E-04	8,00E-03	7 810,00	1	$ 0,02
												Sub Total	**$ 0,02**

ItemOrder	Process	Use	UnitCost	Unit	Quantity	Multiplier	Mult. Val.	Sub Total
10	Machining Setup, Install and remove		$ 1,30	unit	1			$ 1,30
20	Machining		$ 0,04	cm^3	0,24	Material - steel	3	$ 0,03
							Sub Total	**$ 1,33**

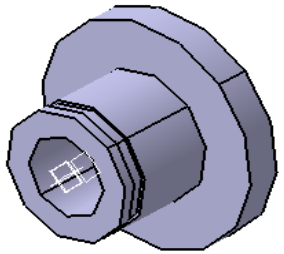

tolérances générales ISO 2768 - mk

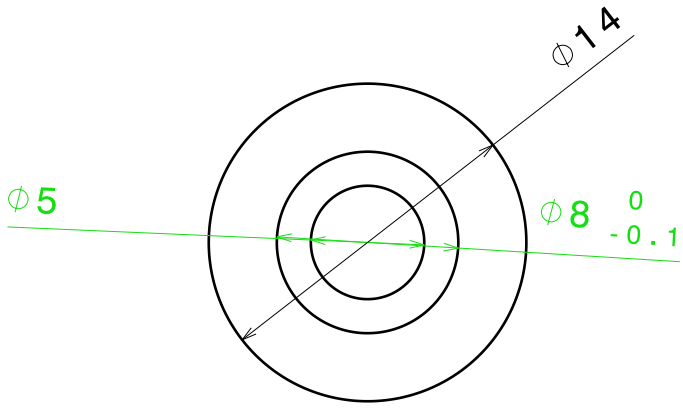

vue vers le bas
Scale: 3:1

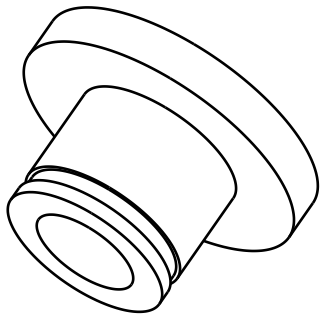

Isometrique
Scale: 3:1

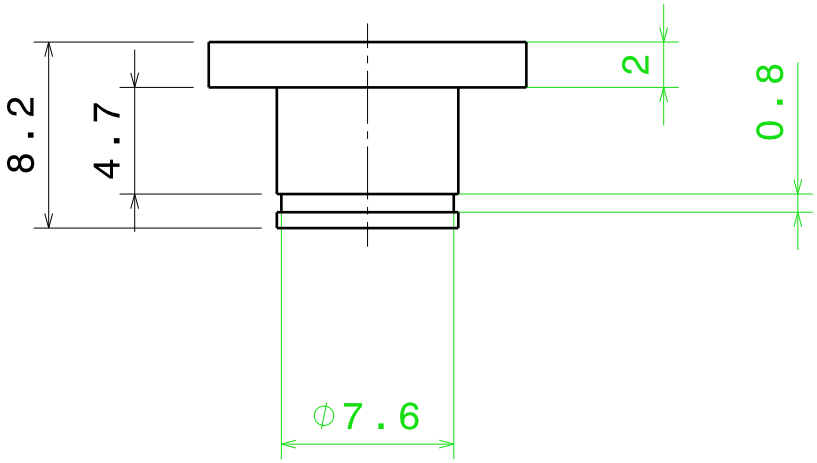

Face
Scale: 3:1

Taille A4		Ecurie Piston Sport Auto	
Dessiné par Albert Vinaixa	Date 16/12/2014	Désignation Douille frein	
Coordonnées 0616717112 albert.vinaixa-verges@ecl13.ec-lyon.fr		Quantité 14	Matériau acier S235	Version 1.0
Plan vérifié par PMR		Echelle 3:1	Numéro du plan 15-B-045	Feuille 1/1

University	Ecole Cenrale de Lyon	**Car #**	81	**Asm Cost**	$ 106,40
System	Brake System			**Qty**	2
Assembly	Rear brake rotor	**FileLink1**			
P/N Base	BR A0002	**FileLink2**		**Extended Cost**	$ 212,80
Suffix	AA	**FileLink3**			
Details	Rear Brake Rotor Assembly				

ItemOrder	Part	Part Cost	Quantity	Sub Total
10	Brake Rotor	$ 6,03	1	$ 6,03
20	Brake Shrink Disc	$ 4,67	1	$ 4,67
30	Brake Caliper	$ 83,00	1	$ 83,00
40	Brake pad	$ 0,96	2	$ 1,92
50	Brake Rotor button	$ 1,34	5	$ 6,70
			Sub Total	**$ 102,32**

ItemOrder	Process	Use	UnitCost	Unit	Quantity	Multiplier	Mult. Val.	Sub Total
10	Assemble,1kg, Line on Line	Line up Pads	$ 0,13	unit	1			$ 0,13
20	Assemble, 1 kg, Loose	Put calipers in place	$ 0,06	unit	1			$ 0,06
30	Ratchet <= 25.4 mm	Bolt calipers to upright	$ 0,75	unit	2			$ 1,50
40	Reaction Tool <= 25.4 mm	Tighten the M8 nuts	$ 0,25	unit	2			$ 0,50
50	Assemble,1kg, Line on Line	Assemble Brake Rotors and Shrink discs	$ 0,13	Unit	1			$ 0,13
60	Assemble,1kg, Loose	Insert buttons and washers	$ 0,06	Unit	5			$ 0,30
70	Assemble,1kg, Line on Line	Retaining rings	$ 0,13	Unit	5			$ 0,65
80	Assemble,1kg, Line on Line	Assemble Brake Rotor onto hub	$ 0,13	Unit	1			$ 0,13
							Sub Total	**$ 3,40**

ItemOrder	Fastener	Use	UnitCost	Size1	Unit1	Size2	Unit2	Quantity	Sub Total
10	Bolt,Grade 8.8 (SAE)	Calipers in Uprights	$ 0,14	8	mm	35	mm	2	$ 0,28
20	Washer, Grade 8.8 (SAE 5)	Calipers in Uprights	$ 0,01	8	mm			2	$ 0,02
30	Nut, Grade 8.8 (SAE 5)	Calipers in Uprights	$ 0,04	8	mm			2	$ 0,08
40	Washer, Grade 8.8 (SAE 5)	Assemble Brake Rotors and Shrink discs	$ 0,01	12	mm			10	$ 0,10
50	Retaining Ring, External	Assemble Brake Rotors and Shrink discs	$ 0,04	12	mm			5	$ 0,20
								Sub Total	**$ 0,68**

University	Ecole Centrale de Lyon			**Car #**	81	**Part Cost**	$ 7,36
System	Brake system	**FileLink1**				**Qty**	2
Assembly	Rear brake Rotor	**FileLink2**		**FileLink1**			
Part	Brake Rotor	**FileLink3**		**FileLink2**		**Extended Cost**	$ 14,72
P/N Base	BR 02001			**FileLink3**			
Suffix	AA						
Details	Cast iron brake disc						

ItemOrder	Material	Use	UnitCost	Size1	Unit1	Size2	Unit2	Area Name	Area	Length	Density	Quantity	Sub Total
10	Cast Iron (per kg)	Stock material for brake rotor	$ 1,00	98,5	mm			circle area	3,05E-02	0,005	7 000	0,96	$ 0,96
												Sub Total	**$ 0,96**

ItemOrder	Process	Use	UnitCost	Unit	Quantity	Multiplier	Mult. Val.	Sub Total
10	Machining Setup, Install and remove	Setup for laser cut	$ 1,30	unit	1			$ 1,30
20	Laser Cut	Cutout shape	$ 0,01	cm	204	Material - Cast Iron	2,5	$ 5,10
							Sub Total	**$ 6,40**

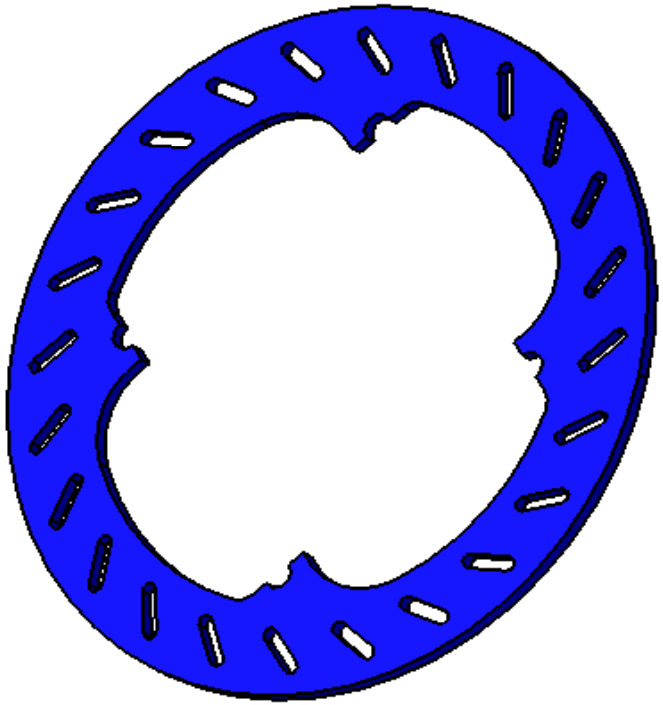

tolérances générales ISO 2768 - mk

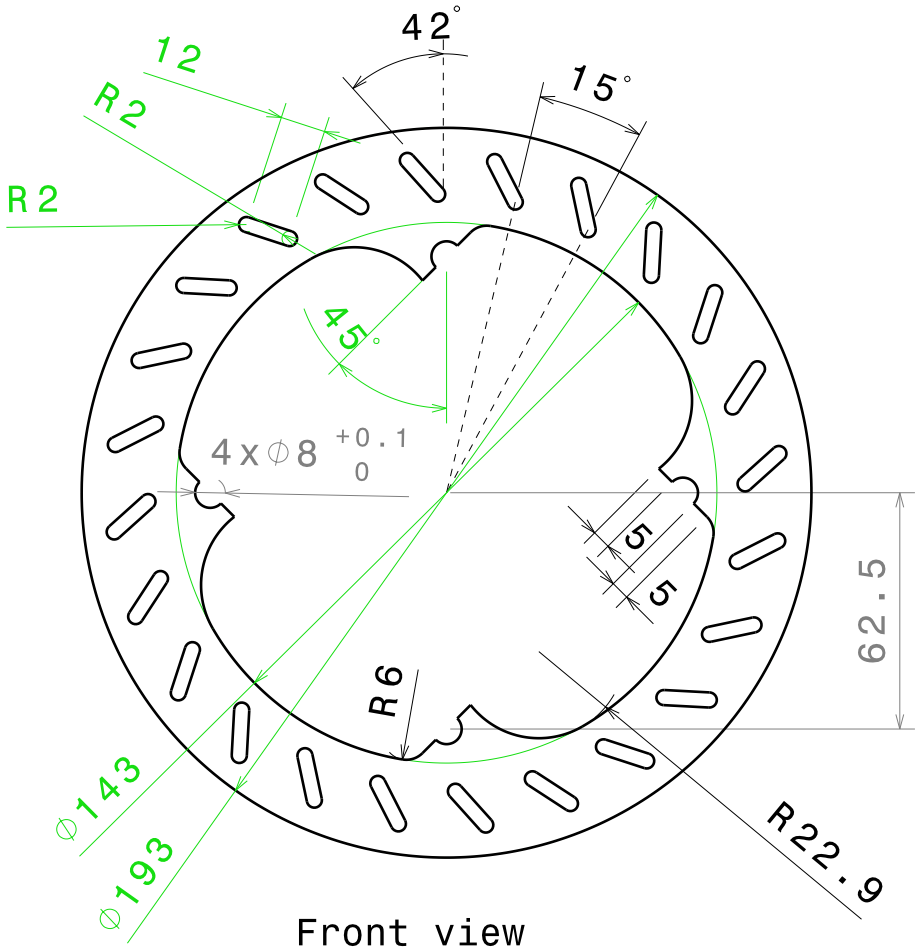

Front view
Scale: 1:2

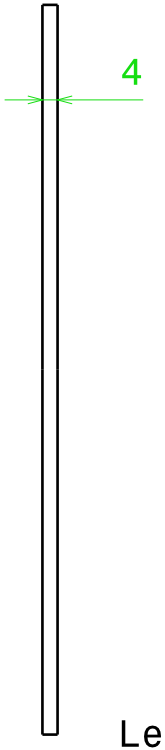

Left view
Scale: 1:2

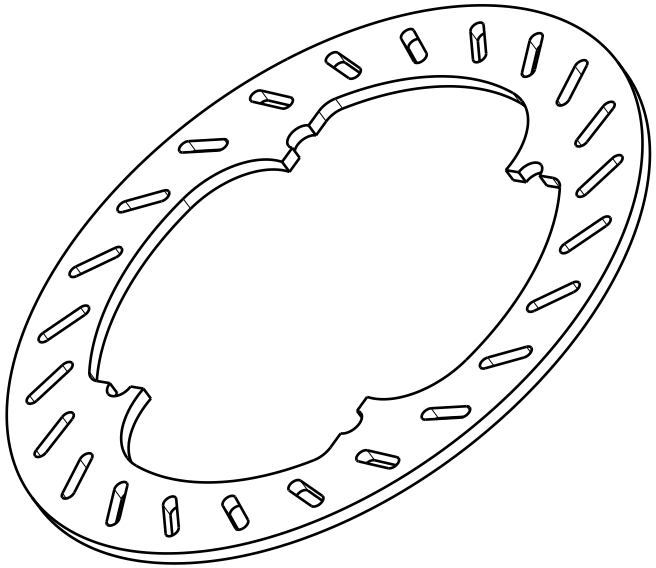

Isometric view
Scale: 1:2

Taille A4		Ecurie Piston Sport Auto
Dessiné par Albert	Date 16/12/2014	Désignation Piste de frein
Coordonnées albert.vinaixa-verges@el13.ec-lyon.fr 0616717112		Quantité 6 / Matériau Fonte Grise G10 / Version 1.0
Plan vérifié par PMR 22		Echelle 1:2 / Numéro du plan 15-M-036 / Feuille 1/1

University	Ecole Centrale de Lyon			**Car #**	81	**Part Cost**	$ 4,67
System	Brake system	**FileLink1**				**Qty**	2
Assembly	Rear brake Rotor	**FileLink2**		**FileLink1**			
Part	Brake Shrink Disc	**FileLink3**		**FileLink2**		**Extended Cost**	$ 9,34
P/N Base	BR 02002			**FileLink3**			
Suffix	AA						
Details	Allows brake rotor to be mounted floating						

ItemOrder	Material	Use	UnitCost	Size1	Unit1	Size2	Unit2	Area Name	Area	Length	Density	Quantity	Sub Total
10	Steel, Mild (per kg)	Stock material for brake shrink disc	$ 2,25	140	mm			circle area	1,54E-02	0,005	7860	6,05E-01	$ 1,36
												Sub Total	**$ 1,36**

ItemOrder	Process	Use	UnitCost	Unit	Quantity	Multiplier	Mult. Val.	Sub Total
10	Machining Setup, Install and remove	Setup for laser cut	$ 1,30	unit	1			$ 1,30
20	Laser Cut	Cutout shape	$ 0,01	cm	67	Material - Cast Iron	3	$ 2,01
							Sub Total	**$ 3,31**

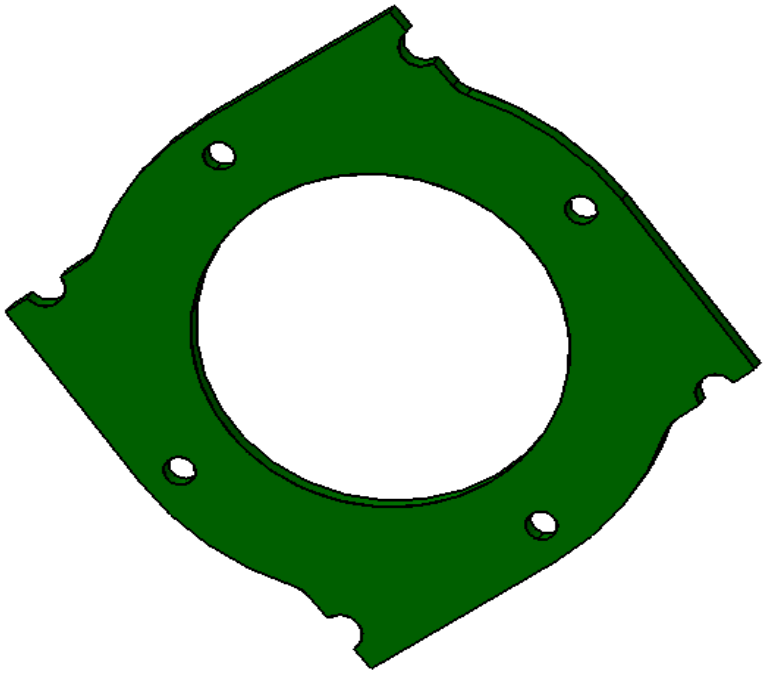

tolérances générales ISO 2768 - mk

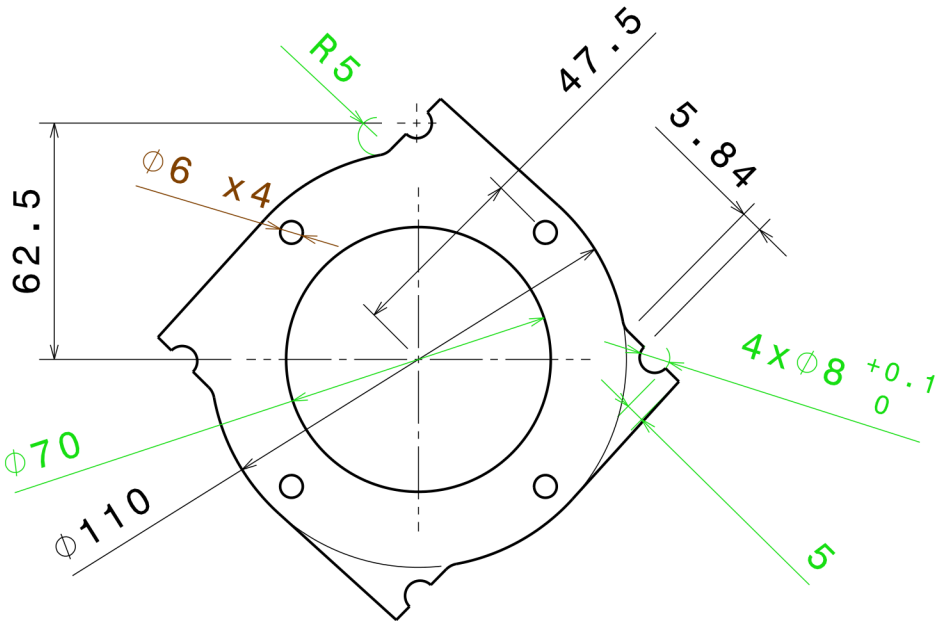

Front view
Scale: 1:2

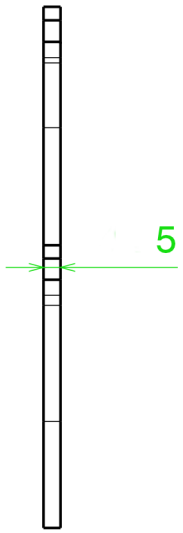

Left view
Scale: 1:2

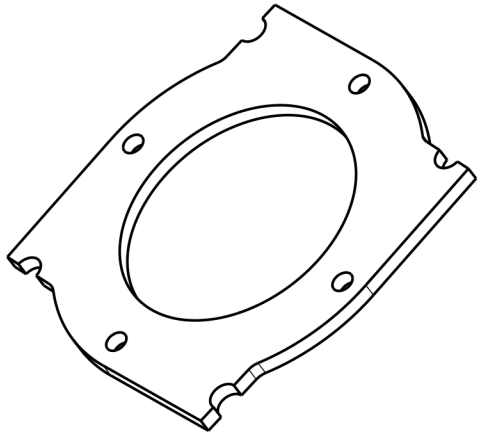

Isometric view
Scale: 1:2

Taille A4		Ecurie Piston Sport Auto
Dessiné par Albert Vinaixa	Date 16/12/2014	Désignation Frette de disque
Coordonnées 0616717112 albert.vinaixa-verges@ecl13.ec-lyon.fr		Quantité 6 / Matériau Aluminium 2017 / Version 1.1
Plan vérifié par PMR 24		Echelle 1:2 / Numéro du plan 15-B-043 / Feuille 1/1

University	Ecole Centrale de Lyon			**Car #**	81	**Part Cost**	$ 112,50
System	Brake system	**FileLink1**				**Qty**	2
Assembly	Rear brake Rotor	**FileLink2**		**FileLink1**			
Part	Brake Caliper	**FileLink3**		**FileLink2**		**Extended Cost**	$ 225,00
P/N Base	BR 02003			**FileLink3**			
Suffix	AA						
Details	Beringer 2D1						

ItemOrder	Material	Use	UnitCost	Size1	Unit1	Size2	Unit2	Area Name	Area	Length	Density	Quantity	Sub Total
10	Brake Caliper, AP, CP4226	Brake Caliper	$ 112,50									1	$ 112,50
												Sub Total	**$ 112,50**

University	Ecole Centrale de Lyon			**Car #**	81	**Part Cost**	$ 0,96
System	Brake system	**FileLink1**				**Qty**	4
Assembly	Rear brake Rotor	**FileLink2**		**FileLink1**			
Part	Brake pad	**FileLink3**		**FileLink2**		**Extended Cost**	$ 3,84
P/N Base	BR 02004			**FileLink3**			
Suffix	AA						
Details	Beringer 2547S						

ItemOrder	Material	Use	UnitCost	Size1	Unit1	Size2	Unit2	Area Name	Area	Length	Density	Quantity	Sub Total
10	Brake Pad, Iron or Steel Rotor	Brake pad	$ 0,0002	40	mm	40	mm	rectangular area	1,60E-03	0,003		1	$ 0,96
												Sub Total	**$ 0,96**

University	Ecole Centrale de Lyon			**Car #**	81	**Part Cost**	$ 1,34
System	Brake system	**FileLink1**				**Qty**	10
Assembly	Rear brake Rotor	**FileLink2**		**FileLink1**			
Part	Brake rotor button	**FileLink3**		**FileLink2**		**Extended Cost**	$ 13,45
P/N Base	BR 02005			**FileLink3**			
Suffix	AA						
Details	Button used to assemble floating rotor on shrink disc						

ItemOrder	Material	Use	UnitCost	Size1	Unit1	Size2	Unit2	Area Name	Area	Length	Density	Quantity	Sub Total
10	Steel, Mild	Material for part	$ 2,25	7	mm			Round, radius 7mm	1,13E-04	8,00E-03	7 810,00	1	$ 0,02
												Sub Total	**$ 0,02**

ItemOrder	Process	Use	UnitCost	Unit	Quantity	Multiplier	Mult. Val.	Sub Total
10	Machining Setup, Install and remove		$ 1,30	unit	1			$ 1,30
20	Machining		$ 0,04	cm^3	0,24	Material - steel	3	$ 0,03
							Sub Total	**$ 1,33**

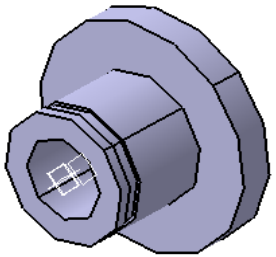

tolérances générales ISO 2768 - mk

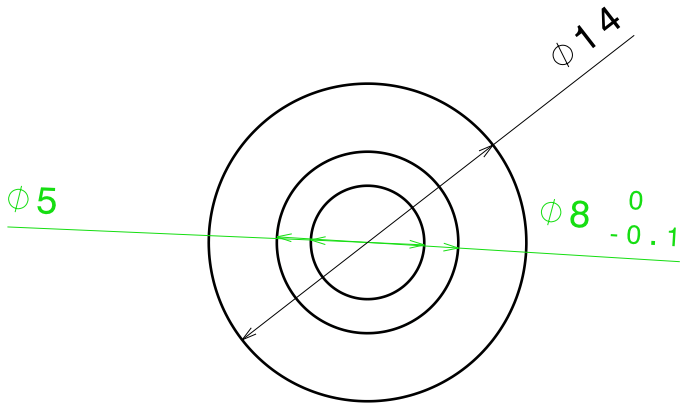

vue vers le bas
Scale: 3:1

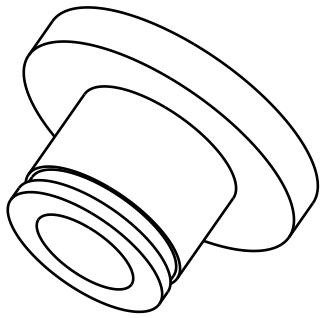

Isometrique
Scale: 3:1

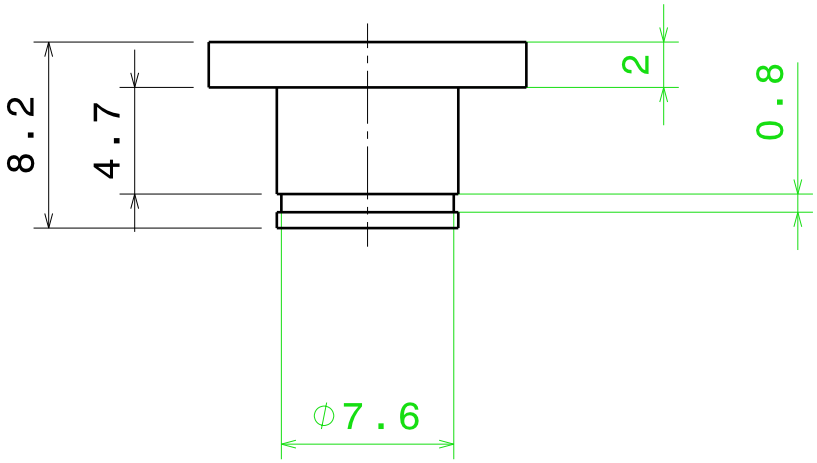

Face
Scale: 3:1

Taille A4		Ecurie Piston Sport Auto	
Dessiné par Albert Vinaixa	Date 16/12/2014	Désignation Douille frein	
Coordonnées 0616717112 albert.vinaixa-verges@ecl13.ec-lyon.fr		Quantité 14	Matériau acier S235	Version 1.0
Plan vérifié par PMR		Echelle 3:1	Numéro du plan 15-B-045	Feuille 1/1

University	Ecole Centrale de Lyon	**Car #**	81	**Asm Cost**	$ 687,72
System	Brake System			**Qty**	1
Assembly	Brake circuit	**FileLink1**			
P/N Base	BR A0003	**FileLink2**		**Extended Cost**	$ 687,72
Suffix	AA	**FileLink3**			
Details	Brake Line Assembly				

ItemOrder	Part	Part Cost	Quantity	Sub Total
10	Brake reservoir tab	$ 1,81	1	$ 2,05
20	Brake reservoir mount	$ 2,07	1	$ 2,07
30	Master Cylinder	$ 97,00	2	$ 194,00
40	Balance Bar	$ 30,00	1	$ 30,00
50	Tee mount	$ 1,55	1	$ 1,55
			Sub Total	**$ 229,67**

ItemOrder	Material	Use	UnitCost	Size1	Unit1	Size2	Unit2	Area Name	Area	Length	Density	Quantity	Sub Total
10	Paint	Protect steel tab and mounts from rust	$ 10,00	0,022	m^2							1	$ 0,22
20	Banjo Fitting, 45 Deg., Aluminum	Brake line	$ 9,80	6,35	mm							6	$ 62,23
30	Banjo Fitting, Aluminum	Brake line	$ 7,85	6,35	mm							2	$ 49,85
40	Banjo Bolt, Aluminum	Brake line	$ 6,80	10	mm							12	$ 68,00
50	Fitting/L.P./Tee/Flare-Flare-Pipe/Steel/	Tee to split the right and left brake line	$ 10,17	6,35	mm							1	$ 64,58
60	Fitting/H.P./Straight//Steel/	Brake line	$ 6,80	6,5	mm							3	$ 44,20
70	Brake Light Pressure Switch Banjo Bolt	Brake light	$ 8,00									1	$ 8,00
80	Crush Washer	Brake line	$ 0,30	6,5	mm							18	$ 1,92
90	Hydraulic Fluid Reservoir, Remote (Plastic)	Brake fluid reservoir	$ 5,00									2	$ 10,00
100	Hose, High Pressure, Stainless Steel Braided Outer	Brake line between Master Cylinder and calipers	$ 13,22	6,45	mm							6,3	$ 85,27
110	Hose, Rubber	Brake line between Master Cylinder and Reservoirs	$ 2,34	0,3	m							2	$ 0,70
120	Heat Shrink Tubing	To put on the end of the HP Hose	$ 0,50	0,6	m							1	$ 0,30
130	Fluid,Oil	Hydraulic (brake)	$ 0,75	0,75	liter							1	$ 0,56
												Sub Total	**$ 395,83**

ItemOrder	Process	Use	UnitCost	Unit	Quantity	Multiplier	Mult. Val.	Sub Total
10	Weld	Weld proportionning valve mount to frame	$ 0,15	cm	2,5		1	$ 0,38
20	Weld	Weld brake reservoir tab to frame	$ 0,15	cm	2,5		1	$ 0,38
30	Aerosol apply	Paint steel tabs and mounts	$ 5,25	m^2	0,022		1	$ 0,12
40	Assemble, 1 kg, Loose	Fix Brake reservoir mount to brake reservoir tab	$ 0,06	unit	1		1	$ 0,06
50	Riveting	Fix Brake reservoir mount to brake reservoir tab	$ 0,25	unit	2		1	$ 0,50
60	Assemble, 1 kg, Loose	Assemble brake fluid reservoirs on reservoir mount	$ 0,06	unit	2		1	$ 0,12
70	Ratchet <= 6.35 mm	Bolt brake fluid reservoirs to reservoir mount	$ 0,50	unit	2		1	$ 1,00
80	Reaction Tool <= 6.35 mm	Reaction tool for M6 nuts	$ 0,25	unit	2		1	$ 0,50
90	Assemble, 1 kg, Loose	Fix tee mount on the frame	$ 0,06	unit	1		1	$ 0,06
100	Ratchet <= 25.4 mm	Bolt tee mount to frame	$ 0,75	unit	2		1	$ 1,50
110	Reaction Tool <= 25.4 mm	Reaction tool for M8 nuts	$ 0,25	unit	2		1	$ 0,50
120	Assemble, 1 kg, Loose	fix tee on the tee tab	$ 0,06	unit	1		1	$ 0,06
130	Ratchet <= 6.35 mm	Bolt tee mount to frame	$ 0,50	unit	2		1	$ 1,00
140	Reaction Tool <= 6.35 mm	Reaction tool for M6 nuts	$ 0,25	unit	2		1	$ 0,50

150	Ratchet <= 25.4 mm	Banjo Bolts in Master Cylinders and Calipers	$ 0,75	unit	10		1	$ 7,50
160	Tube cut	Brake line between Master Cylinder and calipers	$ 0,15	cm	2	Repeat 12	12	$ 3,60
170	Cut(scissors,knife)	Cut the Heat Shrink tubing to lengh	$ 0,06	cm	2	Repeat 12	12	$ 1,44
180	Hand, Tight <= 6.35 mm	Put the hose in the banjos	$ 0,50	unit	12		1	$ 6,00
190	Wrench <= 25.4 mm	Tighten the banjos	$ 1,50	unit	12		1	$ 18,00
200	Reaction Tool <= 25.4 mm	Reaction tool to lock the banjos	$ 0,25		12		1	$ 3,00
210	Shrink Tube	Shrink tube on HP hose	$ 0,15	cm	60		1	$ 9,00
220	Cut(scissors,knife)	Brake line between Master Cylinder and Reservoirs	$ 0,06	cm	4,1	Repeat 2	2	$ 0,49
230	Screwdriver > 1 Turn	Tighten hose clamps - worm drive	$ 0,19	unit	4		1	$ 0,76
240	Install Tie Wrap (Zip Tie, Cable Clamp)	Fix the brake on the frame and the A-arms	$ 0,09	unit	17		1	$ 1,59
							Sub Total	**$ 58,05**

ItemOrder	Fastener	Use	UnitCost	Size1	Unit1	Size2	Unit2	Quantity	Sub Total
10	Bolt, Grade 8.8 (SAE 5)	Fix brake fluid reservoirs to reservoir mount	$ 0,04	6	mm	16	mm	2	$ 0,08
20	Nut, Grade 8.8 (SAE 5)	Fix brake fluid reservoirs to reservoir mount	$ 0,03	6	mm			2	$ 0,06
30	Washer, Grade 8.8 (SAE 5)	Fix brake fluid reservoirs to reservoir mount	$ 0,01	6	mm			4	$ 0,04
40	Bolt, Grade 8.8 (SAE 5)	Fix tee tab to frame	$ 0,04	6	mm	16	mm	1	$ 0,04
50	Nut, Grade 8.8 (SAE 5)	Fix tee tab to frame	$ 0,03	6	mm			1	$ 0,03
60	Washer, Grade 8.8 (SAE 5)	Fix tee tab to frame	$ 0,01	6	mm			2	$ 0,02
70	Bolt, Grade 8.8 (SAE 5)	Fix front tee to tee tab	$ 0,26	8	mm			1	$ 0,26
80	Nut, Grade 8.8 (SAE 5)	Fix front tee to tee tab	$ 0,04	8	mm			2	$ 0,08
90	Washer, Grade 8.8 (SAE 5)	Fix front tee to tee tab	$ 0,01	8	mm			1	$ 0,01
100	Hose Clamp, Worm Drive	Brake line between Master Cylinder and Reservoirs	$ 0,55	13	mm			4	$ 2,20
110	Tie Wrap	fix the brake line and the rear tee	$ 0,04					17	$ 0,68
								Sub Total	**$ 3,50**

ItemOrder	Tooling	Use	UnitCost	Unit	Quantity	PVF	FracIncld	Sub Total
10	Welds - Welding Fixture	Parts welded to frame	$ 500,00	point	4	3000	1	$ 0,67
							Sub Total	**$ 0,67**

University	Ecole Centrale de Lyon			**Car #**	81	**Part Cost**	$ 1,81
System	Brake system	**FileLink1**				**Qty**	1
Assembly	Brake circuit	**FileLink2**		**FileLink1**			
Part	Brake reservoir tab	**FileLink3**		**FileLink2**		**Extended Cost**	$ 1,81
P/N Base	BR 03001			**FileLink3**			
Suffix	AA						
Details	Steel tab welded to chassis						

ItemOrder	Material	Use	UnitCost	Size1	Unit1	Size2	Unit2	Area Name	Area	Length	Density	Quantity	Sub Total
10	Steel (per kg)	Material for part	$ 2,25	50	mm	30	mm	Rectangular area 50mm x 30mm	1,50E-04	0,002	8 010,00	1	$ 0,01
												Sub Total	**$ 0,01**

ItemOrder	Process	Use	UnitCost	Unit	Quantity	Multiplier	Mult. Val.	Sub Total
10	Machining Setup, Install and remove	Install and remove part from laser machine	$ 1,30	unit	1			$ 1,30
20	Laser cut	cutout the outline and holes	$ 0,01	cm	16,6	Material - Steel	3	$ 0,50
							Sub Total	**$ 1,80**

University	Ecole Centrale de Lyon			**Car #**	81	**Part Cost**	$ 2,07
System	Brake system	**FileLink1**				**Qty**	1
Assembly	Brake Circuit	**FileLink2**		**FileLink1**			
Part	Brake reservoir mount	**FileLink3**		**FileLink2**		**Extended Cost**	$ 2,07
P/N Base	BR 03002			**FileLink3**			
Suffix	AA						
Details	Aluminium part to hold reservoirs						

ItemOrder	Material	Use	UnitCost	Size1	Unit1	Size2	Unit2	Area Name	Area	Length	Density	Quantity	Sub Total
10	Aluminium, normal (per kg)	Material for part	$ 4,20	70	mm	40	mm	Rectangular area 70mm x 40mm	2,80E-04	0,002	2 710,00	1	$ 0,01
												Sub Total	**$ 0,01**

ItemOrder	Process	Use	UnitCost	Unit	Quantity	Multiplier	Mult. Val.	Sub Total
10	Machining Setup, Install and remove	Install and remove part from laser machine	$ 1,30	unit	1			$ 1,30
20	Laser cut	Cutout the outline and holes	$ 0,01	cm	26,3	Material - Aluminium	1	$ 0,26
30	Sheet metal bends	For edge bends	$ 0,25	bend	2			$ 0,50
							Sub Total	**$ 2,06**

University	Ecole Centrale de Lyon			**Car #**	81	**Part Cost**	$ 97,00
System	Brake system	**FileLink1**				**Qty**	2
Assembly	Brake Circuit	**FileLink2**		**FileLink1**			
Part	Master Cylinder	**FileLink3**		**FileLink2**		**Extended Cost**	$ 194,00
P/N Base	BR 03003			**FileLink3**			
Suffix	AA						
Details	In reality the Beringer MC 12.7 was used, but as it is not in the cost tables the AP CP3756 master cylinder was chosen as it has similar characteristics						

ItemOrder	Material	Use	UnitCost	Size1	Unit1	Size2	Unit2	Area Name	Area	Length	Density	Quantity	Sub Total
10	Master Cylinder, AP, CP3756	Brake master cylinder	$ 97,00		unit							1	97,00
												Sub Total	**$ 97,00**

University	Ecole Centrale de Lyon			**Car #**	81	**Part Cost**	$ 30,00
System	Brake system	**FileLink1**				**Qty**	1
Assembly	Brake Circuit	**FileLink2**		**FileLink1**			
Part	Master Cylinder	**FileLink3**		**FileLink2**		**Extended Cost**	$ 30,00
P/N Base	BR 03004			**FileLink3**			
Suffix	AA						
Details	Brake balance bar, assembly cost included in Pedal Assembly						

ItemOrder	Material	Use	UnitCost	Size1	Unit1	Size2	Unit2	Area Name	Area	Length	Density	Quantity	Sub Total
10	Balance Bar, Tilton, 72-250	Balance bar for brake bias	$ 30,00		unit							1	30,00
												Sub Total	**$ 30,00**

University	Ecole Centrale de Lyon			**Car #**	81	**Part Cost**	$ 1,55
System	Brake system	**FileLink1**				**Qty**	1
Assembly	Brake Circuit	**FileLink2**		**FileLink1**			
Part	Tee tab	**FileLink3**		**FileLink2**		**Extended Cost**	$ 1,55
P/N Base	BR 03005			**FileLink3**			
Suffix	AA						
Details							

ItemOrder	Material	Use	UnitCost	Size1	Unit1	Size2	Unit2	Area Name	Area	Length	Density	Quantity	Sub Total
10	Aluminum, Normal	Tee tab	$ 4,20	92	mm	32	mm	rectangular area 92mm x 32mm	2,94E-05	0,002	2710	1	$ 0,00
												Sub Total	**$ 0,00**

ItemOrder	Process	Use	UnitCost	Unit	Quantity	Multiplier	Mult. Val.	Sub Total
10	Machining Setup, Install and remove		1,30 €	unit	1			$ 1,30
20	Laser Cut	Outer profile	$ 0,01	cm	24,8	Material - Aluminum	1	$ 0,25
							Sub Total	**$ 1,55**

ÉCOLE CENTRALE LYON

ENGINE & DRIVETRAIN

EPSA TEAM

CAR # 81

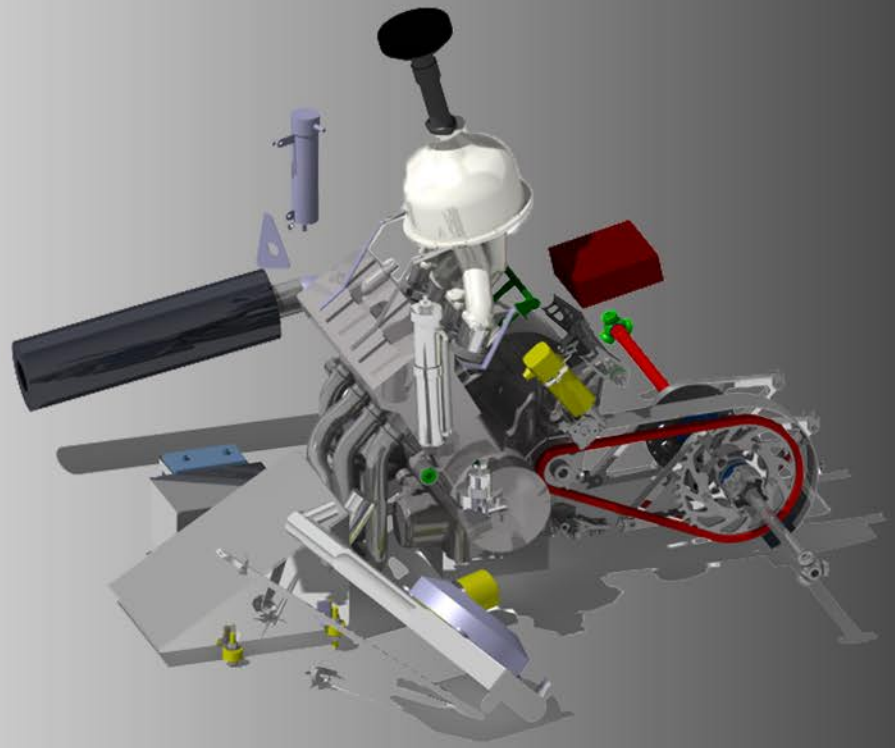

Ecurie Piston Sport Auto

University	Ecole Centrale Lyon	**Car #**	81	**Asm Cost**	$ 1 775.64
System	Engine and drivetrain			**Qty**	1
Assembly	Engine	**FileLink1**			
P/N Base	EN A0001	**FileLink2**		**Extended Cost**	$ 1 775.64
Suffix	AA	**FileLink3**			
Details					

ItemOrder	Part	Part Cost	Quantity	Sub Total
10	Engine	$ 1 500.00	1	$ 1 500.000
20	Front mount	$ 2.35	6	$ 14.122
30	Upper mount	$ 13.76	2	$ 27.521
40	Upper axle	$ 3.12	1	$ 3.115
50	Bottom mount	$ 1.72	2	$ 3.434
60	Bottom link	$ 15.72	2	$ 31.430
70	Bottom axle	$ 3.05	1	$ 3.047
80	Flat sump	$ 56.26	1	$ 56.263
90	Obstrution plate	$ 5.88	2	$ 11.754
			Sub Total	**$ 1 650.687**

ItemOrder	Material	Use	UnitCost	Size1	Unit1	Size2	Unit2	Area Name	Area	Length	Density	Quantity	Sub Total
10	Fluid, Oil	Engine oil	$ 0.75	3.5	l							3.50E+00	$ 2.63
20	Mount, Vibration-Damping Sandwich	Engine mounts	$ 6.75									6.00	$ 40.50
30	Adhesive	Seal paste	$ -									1.00	$ -
40	Seal, O-Ring, Elastomer	Paper seal for sump	$ 0.50									1.00	$ 0.50
50	Paint	Mounts painting	$ 10.00	0.05	m^2							0.05	$ 0.50
												Sub Total	**$ 44.125**

ItemOrder	Process	Use	UnitCost	Unit	Quantity	Multiplier	Mult. Val.	Sub Total
10	Weld	Front mounts welding	$ 0.15	cm	19		1	$ 2.85
20	Weld	Upper mounts welding	$ 0.15	cm	38.9		1	$ 5.84
30	Weld	Bottom mounts welding	$ 0.15	cm	3.2		1	$ 0.48
40	Aerosol apply	Mounts painting	$ 5.25	m^2	0.05		1	$ 0.26
50	Assemble, 1kg, Interference	Assemble vibration damping sandwich	$ 0.19	unit	6		1	$ 1.14
60	Assemble, >20 kg, Interference	Assemble engine in frame	$ 5.63	unit	1		1	$ 5.63
70	Assemble, 1kg, Line-on-Line	Assemble upper axle	$ 0.13	unit	1		1	$ 0.13
80	Ratchet, <= 25.4mm	Tighten upper axle M12 nuts	$ 0.75	unit	2		1	$ 1.50
90	Reaction Tool, <=25.4mm	Reaction tool for M12 nut	$ 0.25	unit	2		1	$ 0.50
100	Ratchet, <= 25.4mm	Tighten front mount M12 nut	$ 0.75	unit	2		1	$ 1.50
110	Reaction Tool, <=25.4mm	Reaction tool for M12 nut	$ 0.25	unit	2		1	$ 0.50
120	Assemble, 1kg, Loose	Assembly of bottom mount and link	$ 0.06	unit	2		1	$ 0.12
130	Ratchet <= 6.35 mm	Tighten Bottom link bolt (M6)	$ 0.50	unit	4		1	$ 2.00
140	Reaction Tool <= 6.35 mm	Reaction tool for M6 Bottom link nut	$ 0.25	unit	4		1	$ 1.00
150	Assemble, 1kg, Line-on-Line	Assemble bottom axle	$ 0.13	unit	1		1	$ 0.13

160	Ratchet, <= 25.4mm	Tighten upper axle M12 nuts	$ 0.75	unit	2		1	$ 1.50	
170	Reaction Tool, <=25.4mm	Reaction tool for M12 nut	$ 0.25	unit	2		1	$ 0.50	
180	Liquid Applicator Gun	Seal paste application	$ 0.20					$ -	
200	Engine first start, includes fuel		$ 50.00	unit	1		1	$ 50.00	
								Sub Total	**75.5775**

ItemOrder	Fastener	Use	UnitCost	Size1	Unit1	Size2	Unit2	Quantity	Sub Total
10	Nut, Grade 12.9	M12 axle nut	0.17	12	mm			6	$ 1.02
20	Bolt, Grade 12.9	M12 front mount bolt	0.23	12	mm			2	$ 0.46
30	Washer, Grade 12.9	M12 washer for mounts	0.02	12	mm			6	$ 0.12
40	Nut, Grade 8.8 (SAE 5)	M6 bottom link nut	0.03	6	mm			4	$ 0.12
50	Bolt, Grade 8.8 (SAE 5)	M6 bottom link bolt	0.04	6	mm	20	mm	4	$ 0.16
60	Washer, Grade 8.8 (SAE 5)	M6 bottom link wacher	0.01	6	mm			4	$ 0.04
								Sub Total	**$ 1.92**

ItemOrder	Tooling	Use	UnitCost	Unit	Quantity	PVF	FractionIncluded	Sub Total
10	Welds - Welding Fixture	Mounts welding	$ 500.00	point	20	3000	1	$ 3.33
							Sub Total	**3.333333333**

University	Ecole Centrale Lyon			**Car #**	11	**Part Cost**	$ 1 500.00
System	Engine and drivetrain	**FileLink1**				**Qty**	1
Assembly	Engine	**FileLink2**		**FileLink1**			
Part	Engine	**FileLink3**		**FileLink2**		**Extended Cost**	$ 1 500.00
P/N Base	EN 01001			**FileLink3**			
Suffix	AA						
Details	Honda CBR 600 RR PC40 engine, with a new anti-dribble clutch, a team-made flat wet sump and a team made gear shift system						

ItemOrder	Material	Use	UnitCost	Size1	Unit1	Size2	Unit2	Area Name	Area	Length	Density	Quantity	Sub Total
10	Engine and Transmission, Ultra High Performance		$ 2.50	600	cc							6.00E+02	$ 1 500.00
												Sub Total	**$ 1 500.000**

University	Ecole Centrale Lyon			**Car #**	11	**Part Cost**	$ 2.35
System	Engine and drivetrain	**FileLink1**				**Qty**	6
Assembly	Front mount	**FileLink2**		**FileLink1**			
Part	Engine	**FileLink3**		**FileLink2**		**Extended Cost**	$ 14.12
P/N Base	EN 01002			**FileLink3**			
Suffix	AA						
Details	Front mount + Vibration damping support sandwich						

ItemOrder	Material	Use	UnitCost	Size1	Unit1	Size2	Unit2	Area Name	Area	Length	Density	Quantity	Sub Total
10	Steel, mild	Front mount	$ 2.25	33	mm			Round 33 mm	0.0008550	0.03	7 860.00	1.00E+00	$ 0.45
												Sub Total	**$ 0.454**

ItemOrder	Process	Use	UnitCost	Unit	Quantity	Multiplier	Mult. Val.	Sub Total
10	Machining setup, install and remove		$ 1.30	unit	1			$ 1.30
20	Machining		$ 0.04	cm^3	5	Material - Steel	3	$ 0.60
							Sub Total	**$ 1.90**

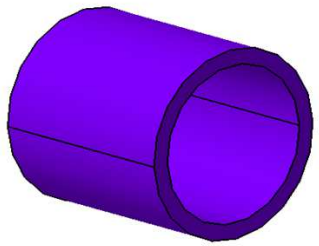

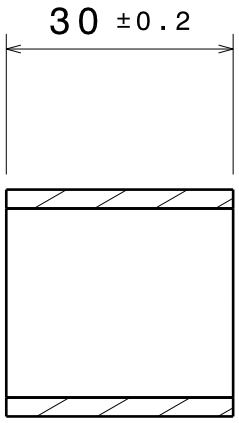

Coupe A-A
Echelle : 1:1

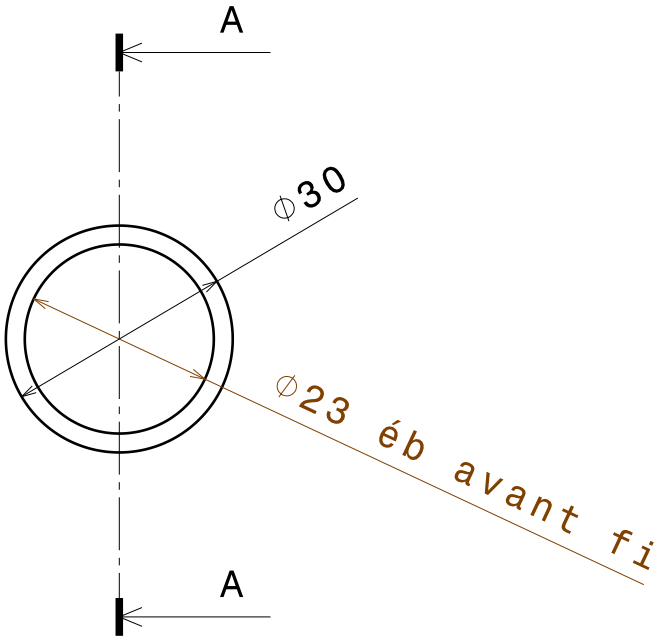

Vue de face
Echelle : 1:1

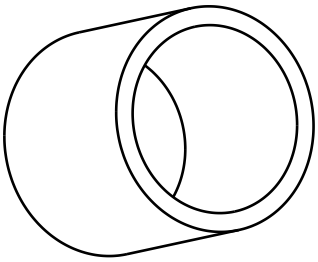

Vue isométrique
Echelle : 1:1

Tolérances générales ISO 2768 - mK

Taille A4		Ecurie Piston Sport Auto	
Dessiné par Martin ZELLER	Date 11/17/2014	Désignation Support silentbloc moteur	
Coordonnées martin.zeller@ecl13.ec-lyon.fr 0678527206		Quantité 8	Matériau Acier S235	Version 1.0
Plan vérifié par CCN		Echelle 1:1	Numéro du plan 15-B-003	Feuille 1/1

University	Ecole Centrale Lyon			**Car #**	81	**Part Cost**	$ 13.76
System	Engine and drivetrain	**FileLink1**				**Qty**	2
Assembly	Engine	**FileLink2**		**FileLink1**			
Part	Upper mount	**FileLink3**		**FileLink2**		**Extended Cost**	$ 27.52
P/N Base	EN 01003			**FileLink3**			
Suffix	AA						
Details	Assembly of 2 plates + 1 front mount						

ItemOrder	Material	Use	UnitCost	Size1	Unit1	Size2	Unit2	Area Name	Area	Length	Density	Quantity	Sub Total
10	Steel, mild	Upper mounts	$ 2.25	36	mm	3	mm	Rectangular Area 36mm x 3mm	0.000108	0.082	7 860.00	2.00E+00	$ 0.31
												Sub Total	**$ 0.313**

ItemOrder	Process	Use	UnitCost	Unit	Quantity	Multiplier	Mult. Val.	Sub Total
10	Machining setup, install and remove		$ 1.30	Unit	2			$ 2.60
20	Laser cut	Outside + inside cut	$ 0.01	cm	92.56	Material - Steel	3	$ 2.78
30	Assemble, 1kg, Line-on-line	Assemble the plate and the front mount (cylinder)	$ 0.13	Unit	2			$ 0.26
40	Weld Round tubing	Weld the plates and the cylinder	$ 0.38	cm	18.8			$ 7.14
							Sub Total	**$ 12.78**

ItemOrder	Tooling	Use	UnitCost	Unit	Quantity	PVF	FracIncld	Sub Total
10	Welds - Welding Fixture	Mounts welding	$ 500.00	point	4	3000	1	$ 0.67
							Sub Total	**0.666666667**

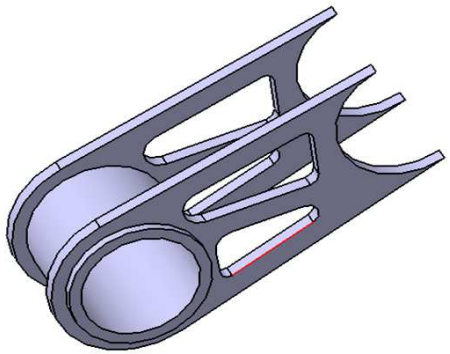

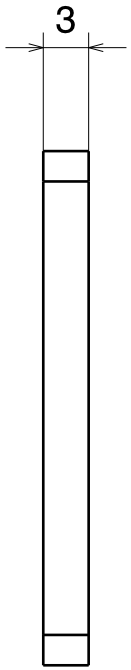

Vue de droite
Echelle : 2:1

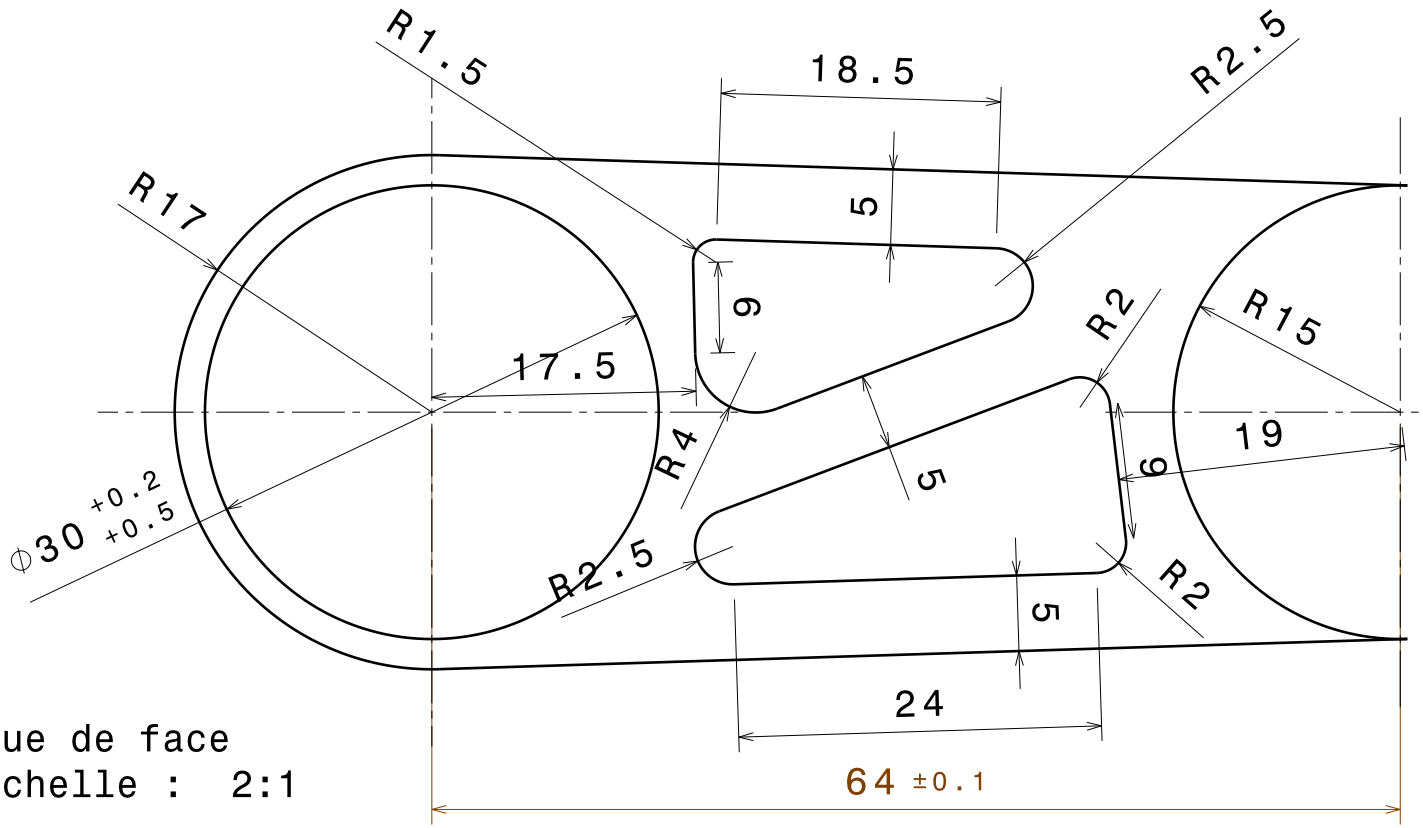

Vue de face
Echelle : 2:1

Tolérances générales ISO 2768 - mK

Taille A4		Ecurie Piston Sport Auto	
Dessiné par Martin ZELLER	Date 11/23/2014	Désignation Plaque chape moteur haute	
Coordonnées 06 78 52 72 06 martin.zeller@ecl13.ec-lyon.fr		Quantité 8	Matériau S 355	Version 1.0
Plan vérifié par CCN 43		Echelle 2:1	Numéro du plan 15-M-001	Feuille 1/1

Vue de face
Echelle : 1:1

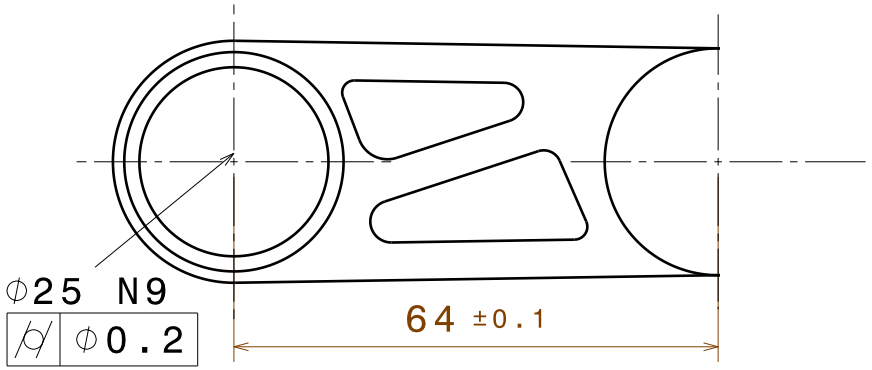

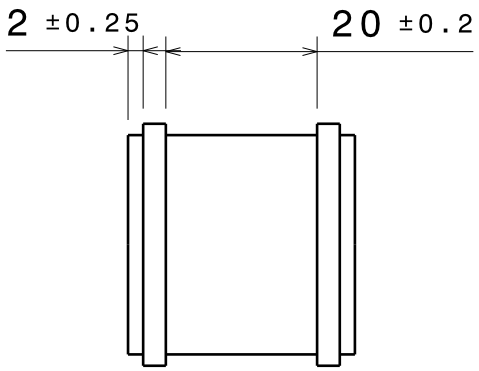

Vue de gauche
Echelle : 1:1

Vue isométrique
Echelle : 1:2

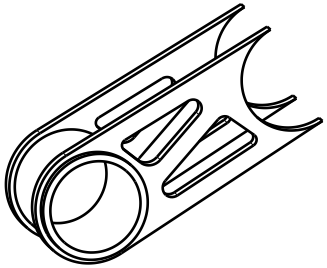

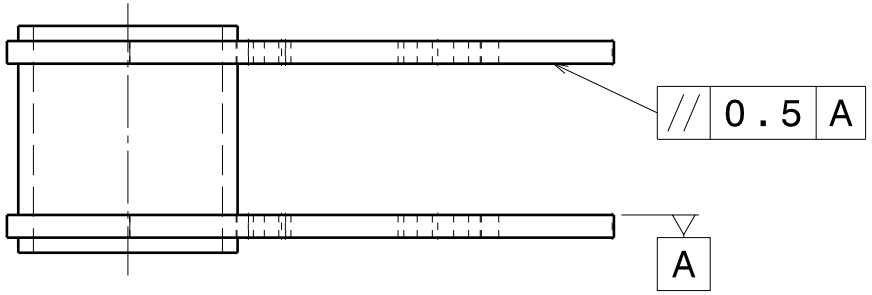

Vue de dessus
Echelle : 1:1

Tolérances générales ISO 2768 - mK

Taille A4		Ecurie Piston Sport Auto
Dessiné par Martin ZELLER	Date 11/23/2014	Désignation Chape moteur haute
Coordonnées 06 78 52 72 06 martin.zeller@ecl13.ec-lyon.fr	Quantité 2	Matériau S 355 / Version 1.0
Plan vérifié par CCN 44	Echelle 1:1	Numéro du plan 15-B-001 / Feuille 1/1

University	Ecole Centrale Lyon			**Car #**	81	**Part Cost**	$ 3.12
System	Engine and drivetrain	**FileLink1**				**Qty**	1
Assembly	Engine	**FileLink2**		**FileLink1**			
Part	Upper axle	**FileLink3**		**FileLink2**		**Extended Cost**	$ 3.12
P/N Base	EN 01004			**FileLink3**			
Suffix	AA						
Details							

ItemOrder	Material	Use	UnitCost	Size1	Unit1	Size2	Unit2	Area Name	Area	Length	Density	Quantity	Sub Total
10	Steel, mild	Axle material	$ 2.25	14	mm			Round 14mm	0.000154	0.27	7 860.00	1.00E+00	$ 0.74
												Sub Total	**$ 0.735**

ItemOrder	Process	Use	UnitCost	Unit	Quantity	Multiplier	Mult. Val.	Sub Total
10	Machining setup, install and remove		$ 1.30	Unit	1			$ 1.30
20	Machining	To 12mm diameter	$ 0.04	cm^3	4	Material - Steel	3	$ 0.48
30	Threading, external (machining)		$ 0.10	cm	6			$ 0.60
							Sub Total	**$ 2.38**

Vue de droite
Echelle : 1:2

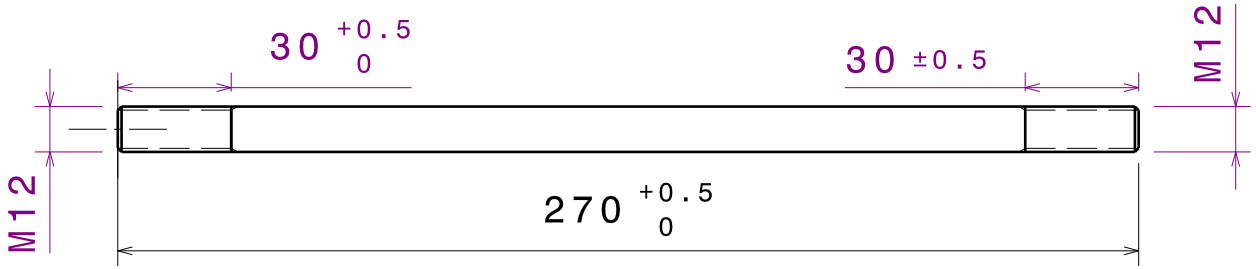

Vue de face
Echelle : 1:2

Chanfreins 1mm à 45°

Tolérances générales ISO 2768 - mK

Taille A4		Ecurie Piston Sport Auto
Dessiné par Martin ZELLER	Date 11/23/2014	Désignation arbre fixation moteur haut
Coordonnées 06 78 52 72 06 martin.zeller@ecl13.ec-lyon.fr		Quantité 1 / Matériau Acier pour axe (Stub) / Version 1.1
Plan vérifié par CCN 46		Echelle 1:2 / Numéro du plan 15-B-004 / Feuille 1/1

University	Ecole Centrale Lyon			**Car #**	81	**Part Cost**	$ 1.72
System	Engine and drivetrain	**FileLink1**				**Qty**	2
Assembly	Engine	**FileLink2**		**FileLink1**			
Part	Bottom mount	**FileLink3**		**FileLink2**		**Extended Cost**	$ 3.43
P/N Base	EN 01005			**FileLink3**			
Suffix	AA						
Details							

ItemOrder	Material	Use	UnitCost	Size1	Unit1	Size2	Unit2	Area Name	Area	Length	Density	Quantity	Sub Total
10	Steel, mild	Bottom mount	$ 2.25	16	mm	2	mm	Plate 16mm x 2 mm	0.000032	0.03	7 860.00	1.00E+00	$ 0.02
												Sub Total	**$ 0.018**

ItemOrder	Process	Use	UnitCost	Unit	Quantity	Multiplier	Mult. Val.	Sub Total
10	Machining setup, install and remove		$ 1.30	Unit	1			$ 1.30
20	Laser cut	Outside + 2 holes	$ 0.01	cm	13.3	Material - Steel	3	$ 0.40
							Sub Total	**$ 1.70**

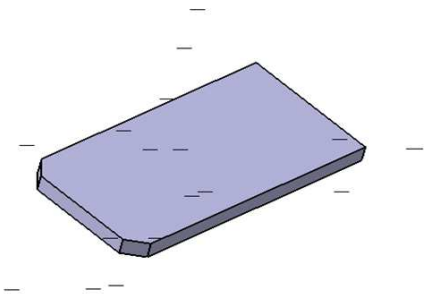

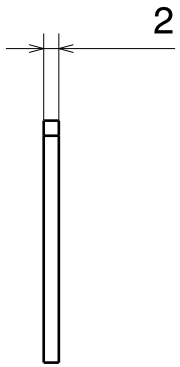

Vue de droite
Echelle : 1:1

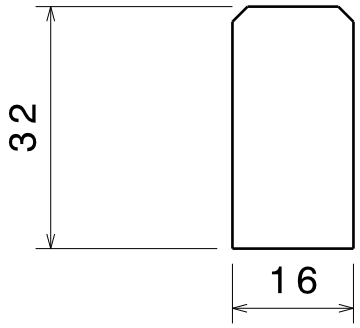

Vue de face
Echelle : 1:1

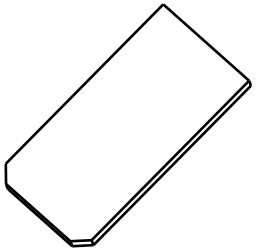

Vue isométrique
Echelle : 1:1

Chanfreins 2-4 mm à 45°

Tolérances générales ISO 2768 - mK

Taille A4		Ecurie Piston Sport Auto
Dessiné par Martin Z	Date 1/18/2015	Désignation Chape moteur basse chassis
Coordonnées 06 78 52 72 06 martin.zeller@ecl13.ec-lyon.fr		Quantité 2 / Matériau S 235 / Version 1.0
Plan vérifié par XXX 48		Echelle 1:1 / Numéro du plan 15-M-004 / Feuille 1/1

University	Ecole Centrale Lyon			**Car #**	81	**Part Cost**	$ 15.72
System	Engine and drivetrain	**FileLink1**				**Qty**	2
Assembly	Engine	**FileLink2**		**FileLink1**			
Part	Bottom link	**FileLink3**		**FileLink2**		**Extended Cost**	$ 31.43
P/N Base	EN 01006			**FileLink3**			
Suffix	AA						
Details	Assembly of 2 side plates + 1 body plate + 1 front mount						

ItemOrder	Material	Use	UnitCost	Size1	Unit1	Size2	Unit2	Area Name	Area	Length	Density	Quantity	Sub Total
10	Steel, mild	Side plates	$ 2.25	36	mm	3	mm	Rectangular Area 36mm x 3mm	0.000108	0.078	7 860.00	2.00E+00	$ 0.30
20	Steel, mild	Body plate	$ 2.25	20	mm	2	mm	Rectangular Area 20mm x 2mm	0.00004	0.028	7 860.00	1.00	$ 0.02
												Sub Total	**$ 0.318**

ItemOrder	Process	Use	UnitCost	Unit	Quantity	Multiplier	Mult. Val.	Sub Total
10	Machining setup, install and remove	Sides + body plate	$ 1.30	Unit	3			$ 3.90
20	Laser cut	Side plate	$ 0.01	cm	60	Material - Steel	3	$ 1.80
30	Laser cut	Body plate	$ 0.01	cm	4	Material - Steel	3	$ 0.12
40	Assemble, 1kg, Line-on-line	Assemble the side plate and the front mount (cylinder)	$ 0.13	Unit	2			$ 0.26
50	Weld Round tubing	Weld the side plates and the cylinder	$ 0.38	cm	18.8			$ 7.14
60	Weld	Weld the body plate and the side plates	$ 0.15	cm	5.6			$ 0.84
							Sub Total	**$ 14.06**

ItemOrder	Tooling	Use	UnitCost	Unit	Quantity	PVF	FracIncld	Sub Total
10	Welds - Welding Fixture	Mounts welding	$ 500.00	point	8	3000	1	$ 1.33
							Sub Total	**1.333333333**

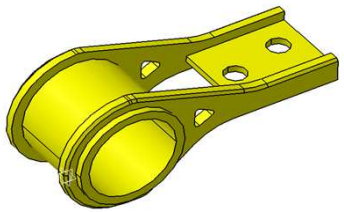

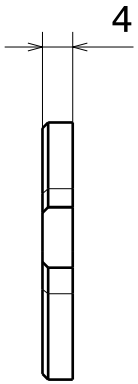

Vue de droite
Echelle : 1:1

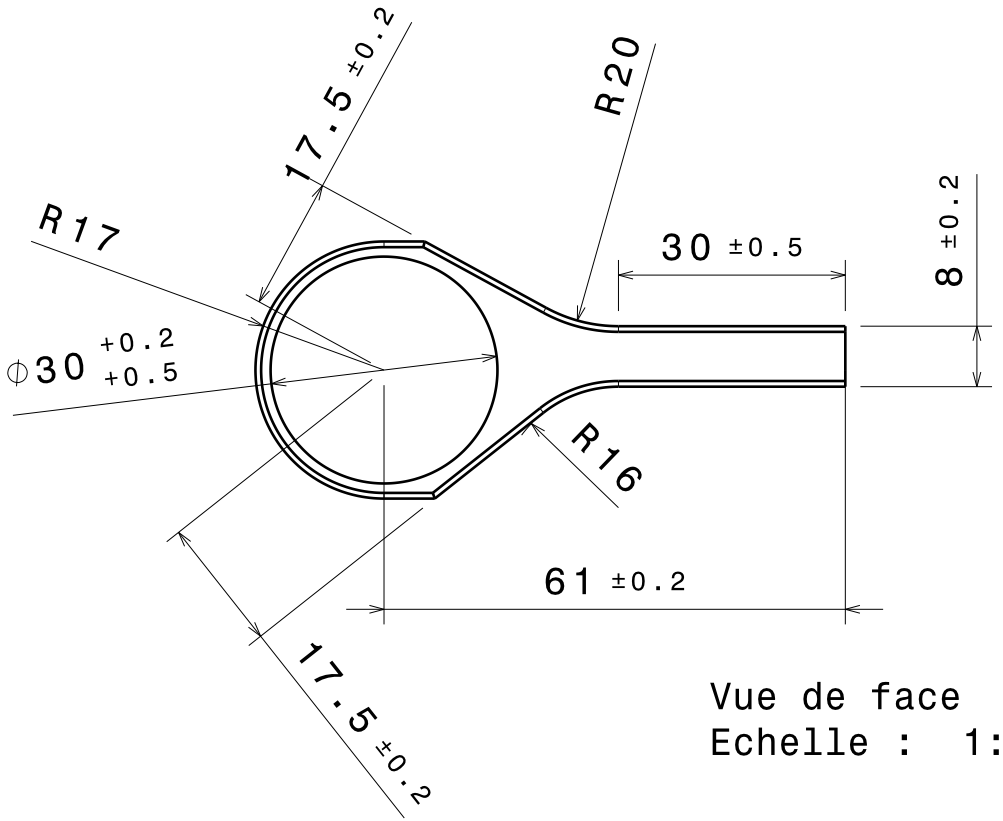

Vue de face
Echelle : 1:1

Chanfreins 0.75mm à 45°

Tolérances générales ISO 2768 - mK

Taille A4		Ecurie Piston Sport Auto
Dessiné par Martin ZELLER	Date 11/23/2014	Désignation Plaque latérale chape moteur basse
Coordonnées 06 78 52 72 06 martin.zeller@ecl13.ec-lyon.fr		Quantité 8 / Matériau S 355 / Version 1.0
Plan vérifié par CCN 50		Echelle 1:1 / Numéro du plan 15-M-002 / Feuille 1/1

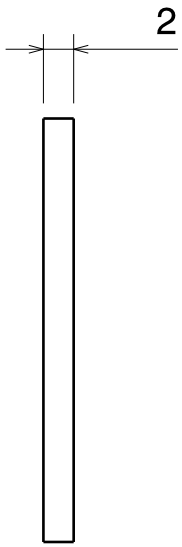

Vue de droite
Echelle : 2:1

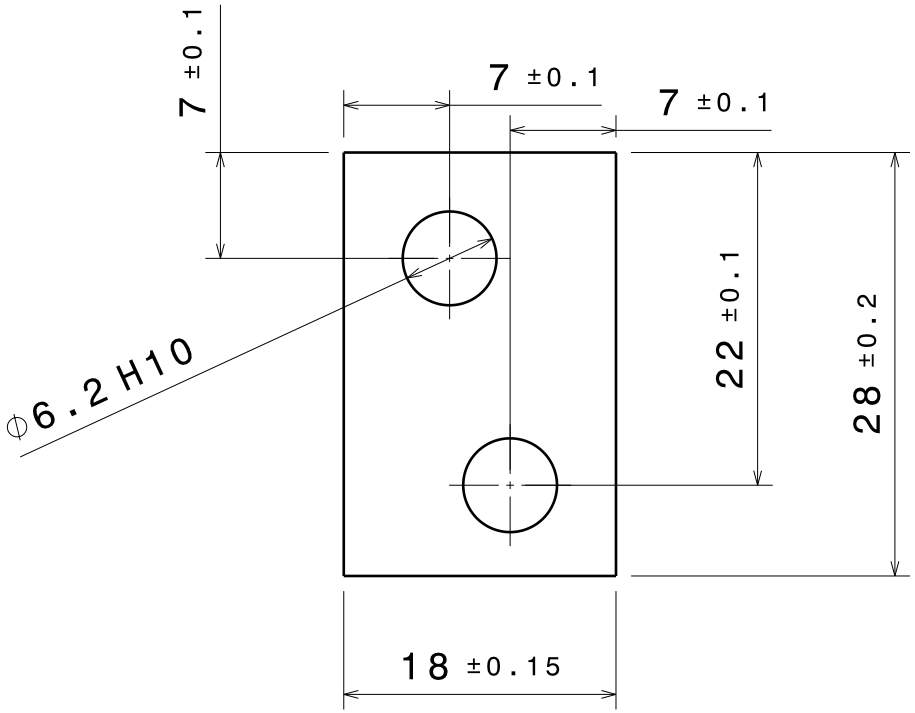

Vue de face
Echelle : 2:1

Tolérances générales ISO 2768 - mK

Taille A4		Ecurie Piston Sport Auto
Dessiné par Martin ZELLER	Date 11/23/2014	Désignation Plaque chape moteur basse
Coordonnées 06 78 52 72 06 martin.zeller@ecl13.ec-lyon.fr		Quantité 1 / Matériau S 355 / Version 1.0
Plan vérifié par CCN 51		Echelle 2:1 / Numéro du plan 15-M-003 / Feuille 1/1

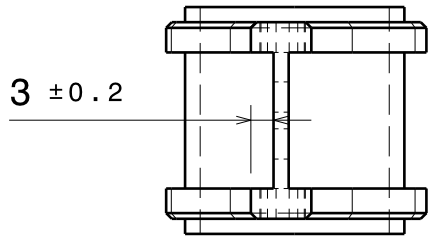

Vue de droite
Echelle : 1:1

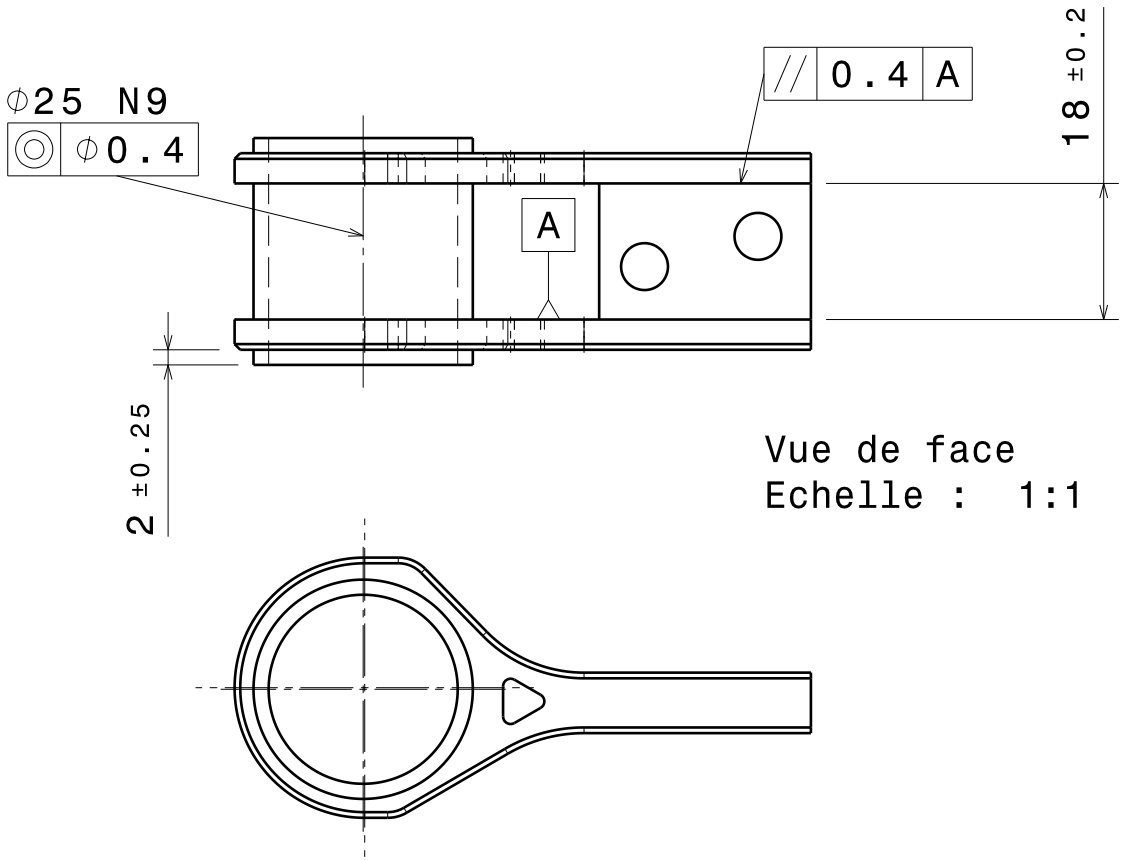

Vue de face
Echelle : 1:1

Tolérances générales ISO 2768 - mK

Taille A4		Ecurie Piston Sport Auto
Dessiné par Martin ZELLER	Date 11/23/2014	Désignation Chape moteur basse
Coordonnées 06 78 52 72 06 martin.zeller@ecl13.ec-lyon.fr	Quantité 2	Matériau S 355 / Version 1.0
Plan vérifié par CCN 52	Echelle 1:1	Numéro du plan 15-B-002 / Feuille 1/1

University	Ecole Centrale Lyon			**Car #**	81	**Part Cost**	$ 3.05
System	Engine and drivetrain	**FileLink1**				**Qty**	1
Assembly	Engine	**FileLink2**		**FileLink1**			
Part	Bottom axle	**FileLink3**		**FileLink2**		**Extended Cost**	$ 3.05
P/N Base	EN 01007			**FileLink3**			
Suffix	AA						
Details							

ItemOrder	Material	Use	UnitCost	Size1	Unit1	Size2	Unit2	Area Name	Area	Length	Density	Quantity	Sub Total
10	Steel, mild	Axle material	$ 2.25	14	mm			Round 14mm	0.000154	0.245	7 860.00	1.00E+00	$ 0.67
												Sub Total	**$ 0.667**

ItemOrder	Process	Use	UnitCost	Unit	Quantity	Multiplier	Mult. Val.	Sub Total
10	Machining Setup, installation and remove		$ 1.30	Unit	1			$ 1.30
20	Machining	To 12mm diameter	$ 0.04	cm^3	4	Material - Steel	3	$ 0.48
30	Threading, external (Machining)		$ 0.10	cm	6			$ 0.60
							Sub Total	**$ 2.38**

Vue de droite
Echelle : 1:2

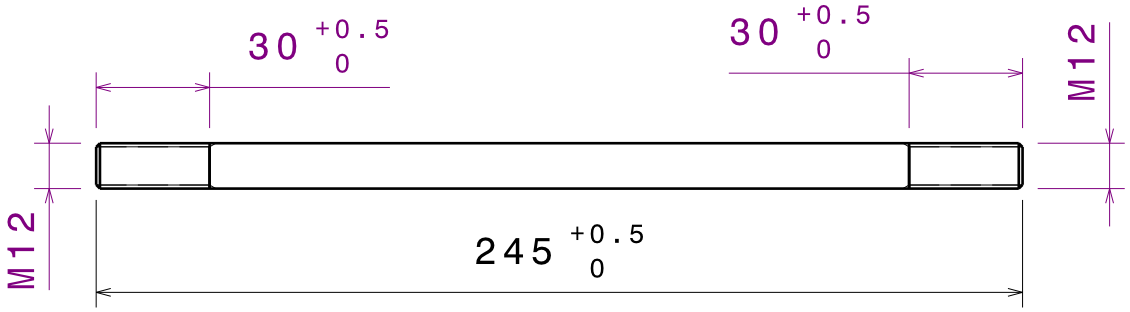

Vue de face
Echelle : 1:2

Chanfreins 1mm à 45°

Tolérances générales ISO 2768 - mK

Taille A4		Ecurie Piston Sport Auto
Dessiné par Martin ZELLER	Date 11/23/2014	Désignation Axe moteur bas
Coordonnées 06 78 52 72 06 martin.zeller@ecl13.ec-lyon.fr		Quantité 1 / Matériau Acier pour axe (Stub) / Version 1.1
Plan vérifié par CCN 54		Echelle 1:2 / Numéro du plan 15-B-005 / Feuille 1/1

University	Ecole Centrale Lyon			**Car #**	81	**Part Cost**	$ 56.26
System	Engine and drivetrain	**FileLink1**				**Qty**	1
Assembly	Engine	**FileLink2**		**FileLink1**			
Part	Flat sump	**FileLink3**		**FileLink2**		**Extended Cost**	$ 56.26
P/N Base	EN 01008			**FileLink3**			
Suffix	AA						
Details	Flat wet sump						

ItemOrder	Material	Use	UnitCost	Size1	Unit1	Size2	Unit2	Area Name	Area	Length	Density	Quantity	Sub Total
10	Aluminium - Normal	5754, outside plates	$ 4.20	300	mm	2.5	mm	Rectangular plate 300mm x 2.5mm	0.000750	0.40	2 710.00	1.00E+00	$ 3.41
30	Aluminium - Normal	5754, partition material	$ 4.20	70	mm	1.5	mm	Rectangular plate 70mm x 1.5mm	0.000105	0.13	2.71E+03	1.00	$ 0.16
												Sub Total	**$ 3.570**

ItemOrder	Process	Use	UnitCost	Unit	Quantity	Multiplier	Mult. Val.	Sub Total
10	Machining Setup, installation and remove	outside + partition plates	$ 1.30	unit	2			$ 2.60
20	Laser cut	outside plates	$ 0.01	cm	427.2	Material - Aluminium	1	$ 4.27
30	Laser cut	partition material	$ 0.01	cm	77.8	Material - Aluminium	1	$ 0.78
40	Weld	Weld outside plates (partition plates just pointed)	$ 0.15	cm	162.4			$ 24.36
50	Machining Setup, installation and remove		$ 1.30	unit	1			$ 1.30
60	Drilled holes < 25.4 mm dia.	Draining hole	$ 0.35	hole	1			$ 0.35
70	Threading, Internal (machining)	For draining screw	$ 0.10	cm	0.6			$ 0.06

80	Ratchet <= 6.35 mm	For M6 bolt	$ 0.50	unit	12	Fastener Engagement Length > 4D	1.5	$ 9.00
90	Ratchet <= 25.4 mm	For M8 bolt	$ 0.75	unit	1			$ 0.75
							Sub Total	**$ 43.47**

ItemOrder	Fastener	Use	UnitCost	Size1	Unit1	Size2	Unit2	Quantity	Sub Total
10	Bolt, Grade 8.8 (SAE 5)	Assemble the sump and the engine	0.07	6	mm	30	mm	12	$ 0.84
20	Bolt, Grade 8.8 (SAE 5)	Draining bolt	0.05	8	mm	10	mm	1	$ 0.05
								Sub Total	**$ 0.89**

ItemOrder	Tooling	Use	UnitCost	Unit	Quantity	PVF	FracIncld	Sub Total
10	Welds - Welding Fixture	Mounts welding	$ 500.00	point	50	3000	1	$ 8.33
							Sub Total	**8.333333333**

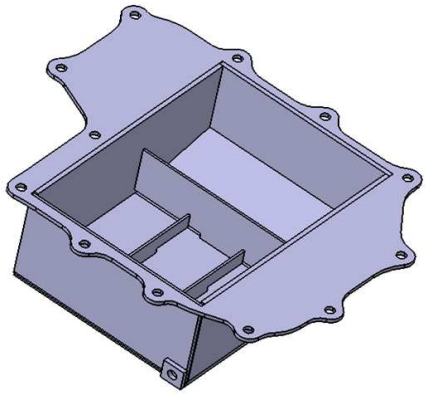

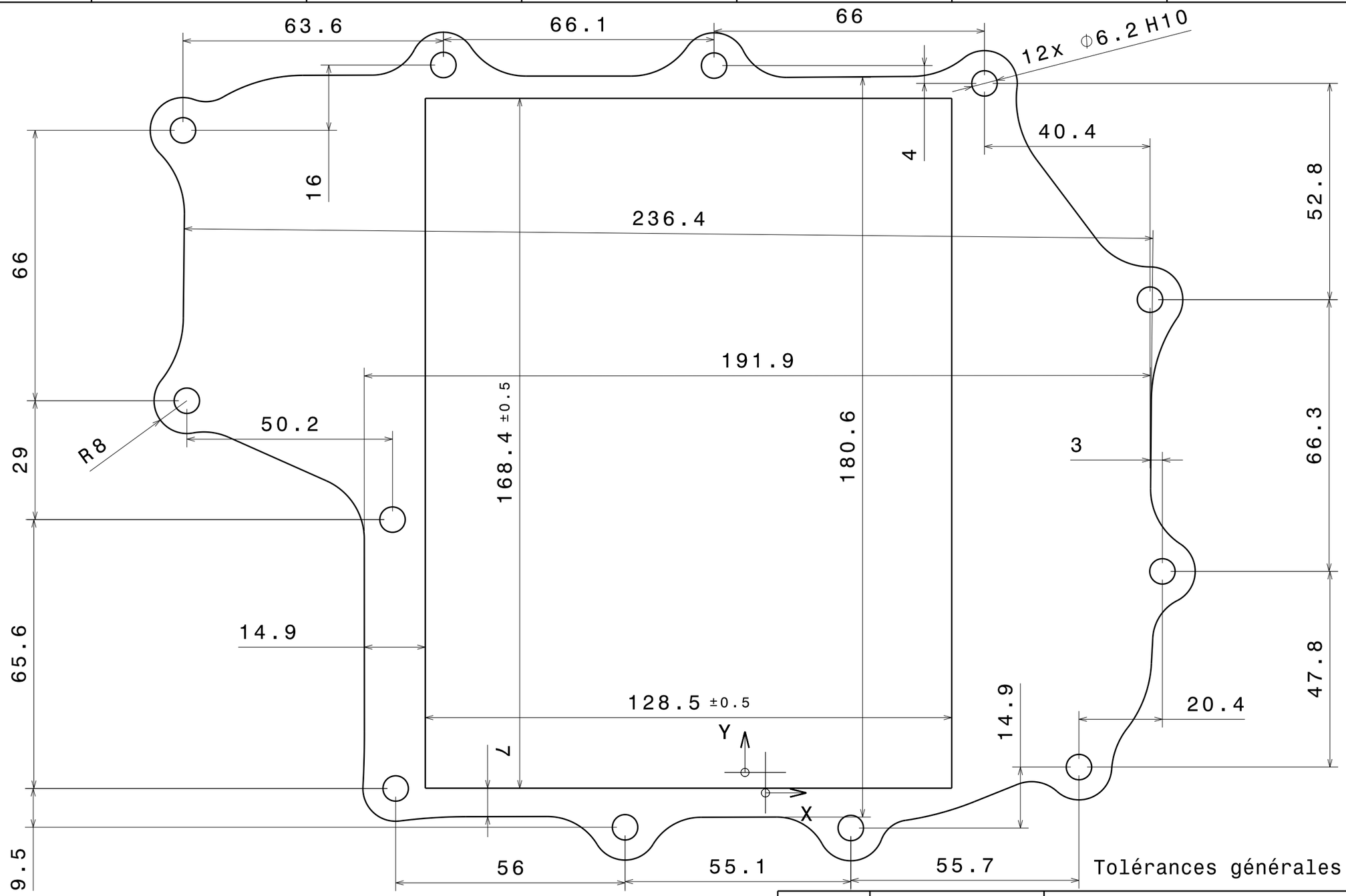

Tolérances générales ISO 2768 - mK

Vue de face
Echelle : 1:1

Taille A3		Ecurie Piston Sport Auto
Dessiné par Martin ZELLER	Date 11/25/2014	Désignation: Plan de joint carter
Coordonnées 06 78 52 72 06 martin.zeller@ecl13.ec-lyon.fr		Quantité 1 / Matériau Aluminium 5083 ep 3 / Version 1.1
Plan vérifié par PMR		Echelle 1:1 / Numéro du plan 15-M-005 / Feuille 1/1

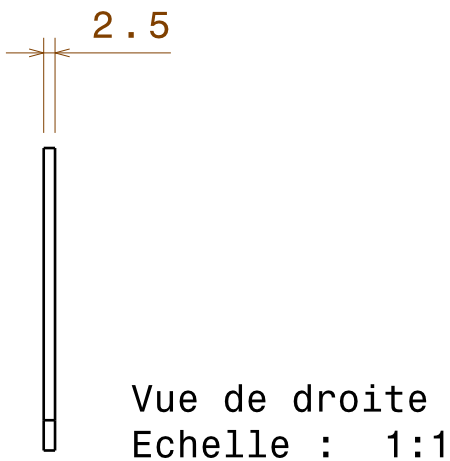

Vue de droite
Echelle : 1:1

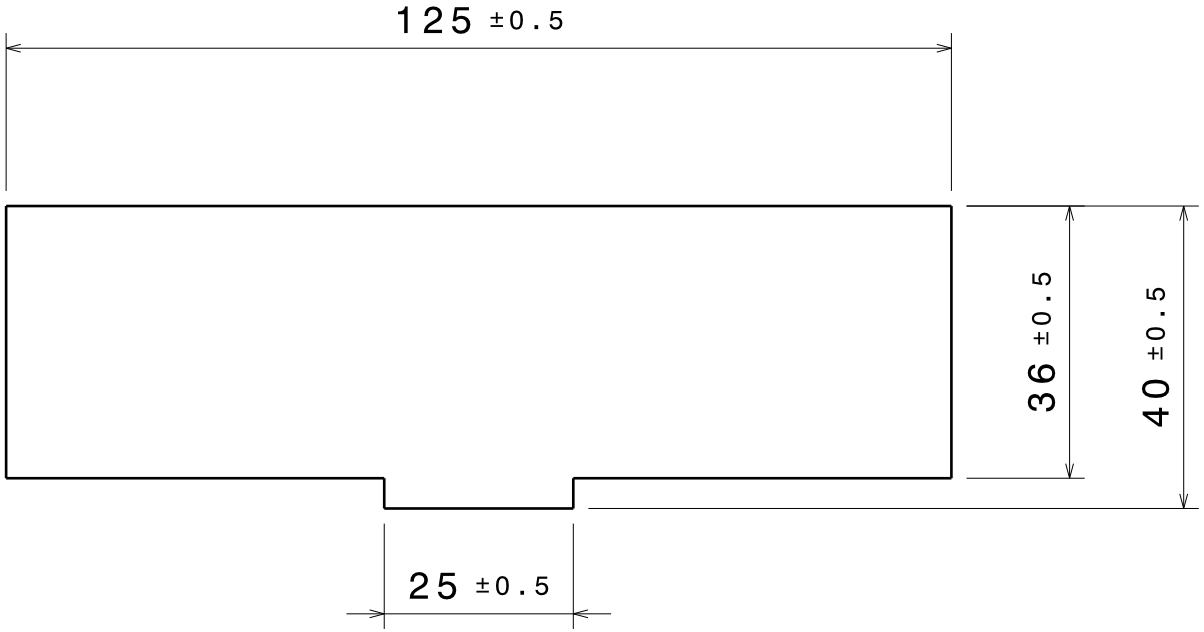

Vue de face
Echelle : 1:1

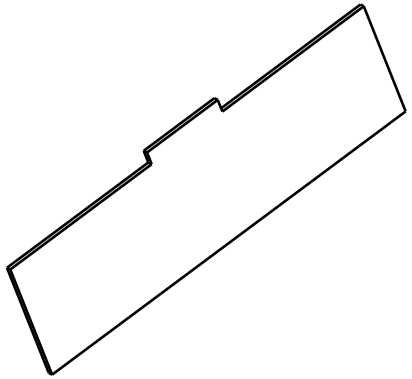

Vue isométrique
Echelle : 1:2

Tolérances générales ISO 2768 - mK

Taille A4		Ecurie Piston Sport Auto
Dessiné par Martin ZELLER	Date 11/25/2014	Désignation Cloison transversale carter
Coordonnées 06 78 52 72 06 martin.zeller@ecl13.ec-lyon.fr		Quantité 1 / Matériau Aluminium 5754 / Version 1.1
Plan vérifié par PMR 58		Echelle 1:1 / Numéro du plan 15-B-007 / Feuille 1/1

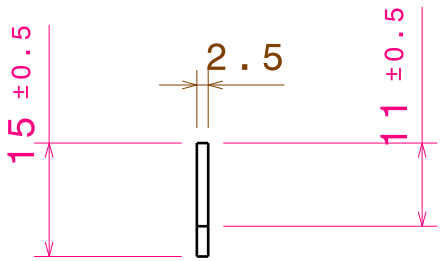

Vue de droite
Echelle : 1:1

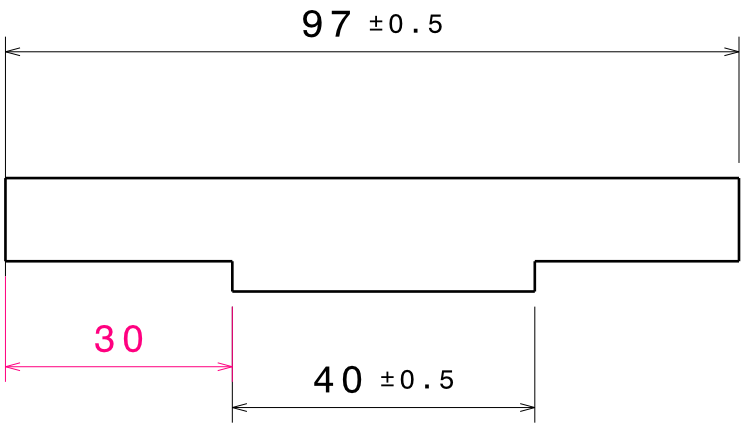

Vue de face
Echelle : 1:1

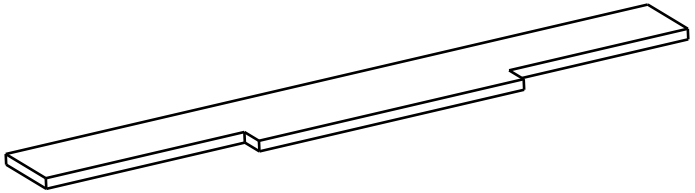

Vue isométrique
Echelle : 1:1

Tolérances générales ISO 2768 - mK

Taille A4		Ecurie Piston Sport Auto
Dessiné par Martin ZELLER	Date 11/25/2014	Désignation Cloison longitudinale cater
Coordonnées 06 78 52 72 06 martin.zeller@ecl13.ec-lyon.fr		Quantité 2 / Matériau Aluminium 5754 / Version 1.1
Plan vérifié par PMR 59		Echelle 1:1 / Numéro du plan 15-B-008 / Feuille 1/1

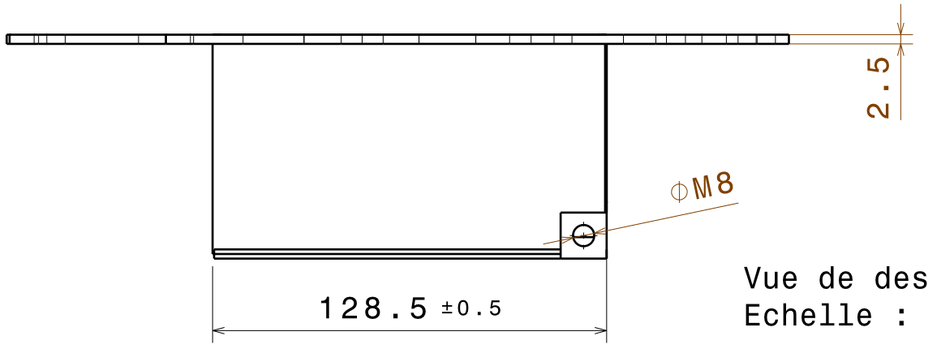

Vue de dessous
Echelle : 1:2

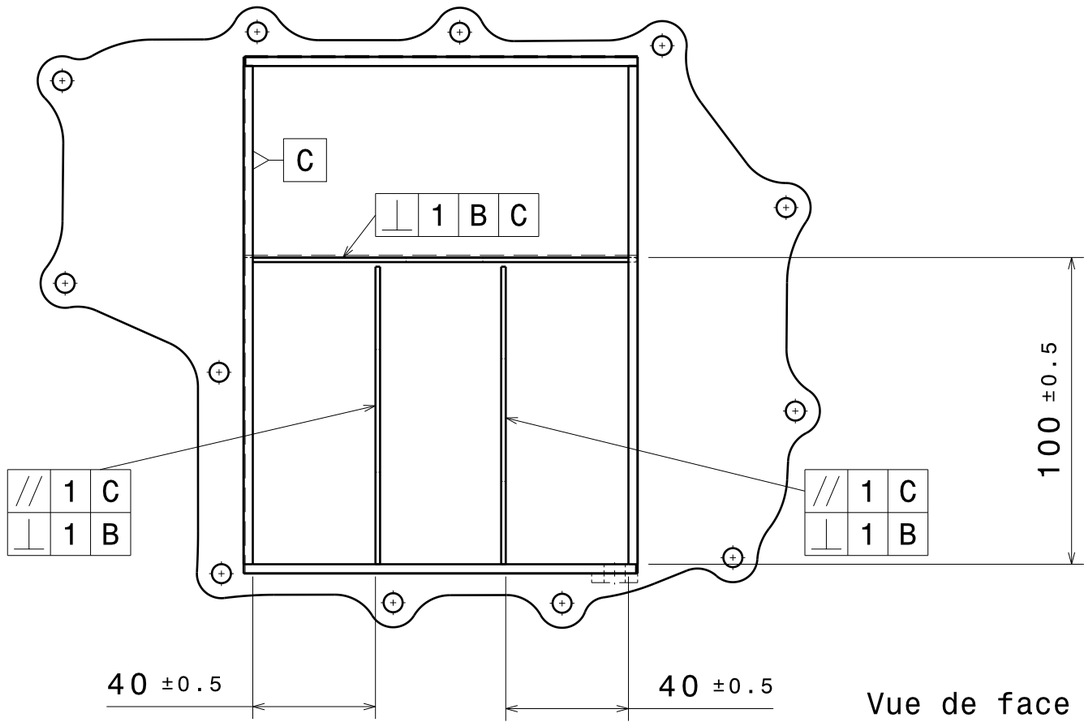

Vue de face
Echelle : 1:2

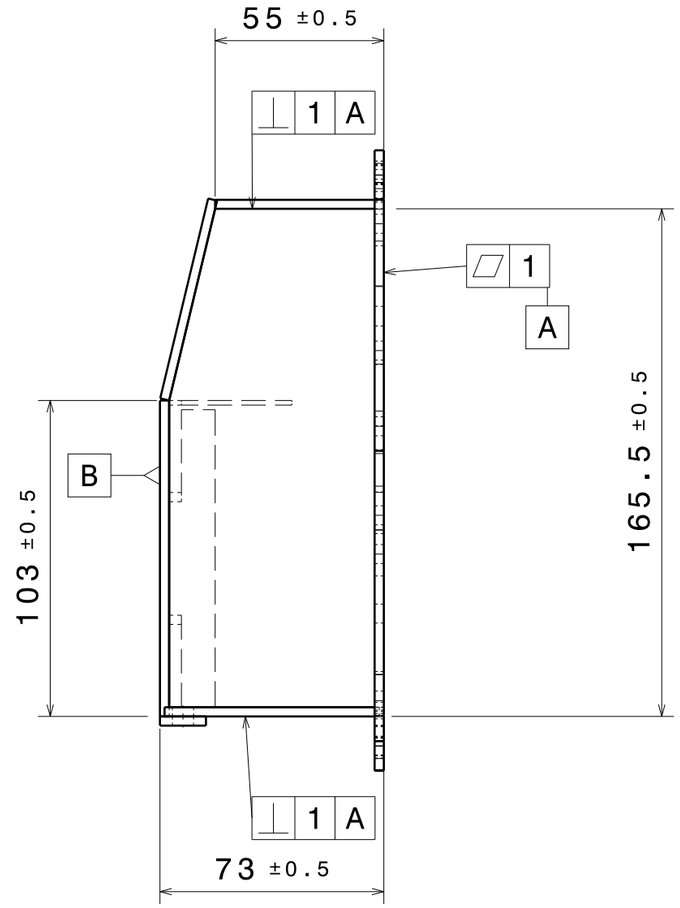

Vue de gauche
Echelle : 1:2

Tolérances générales ISO 2768 - mK

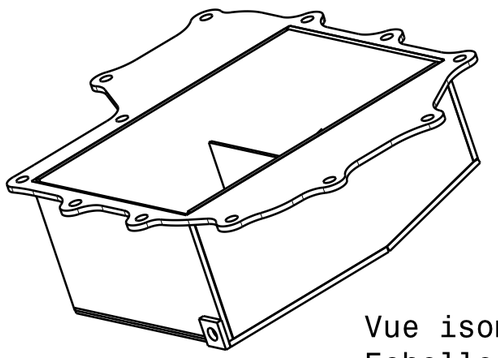

Vue isométrique
Echelle : 1:3

Taille A3		Ecurie Piston Sport Auto	
Dessiné par Martin ZELLER	Date 12/12/2014	Désignation Carter moteur	
Coordonnées 06 78 52 72 06 martin.zeller@ecl13.ec-lyon.fr		Quantité 1	Matériau Aluminium 5754 ep 2.5	Version 1.1
Plan vérifié par PMR		Echelle 1:2	Numéro du plan 15-B-006	Feuille 1/1

60

University	Ecole Centrale Lyon			**Car #**	81	**Part Cost**	$ 5.88
System	Engine and drivetrain	**FileLink1**				**Qty**	2
Assembly	Engine	**FileLink2**		**FileLink1**			
Part	Obstrution plate	**FileLink3**		**FileLink2**		**Extended Cost**	$ 11.75
P/N Base	EN 01009			**FileLink3**			
Suffix	AA						
Details	Obstruction of the PAIR valves						

ItemOrder	Material	Use	UnitCost	Size1	Unit1	Size2	Unit2	Area Name	Area	Length	Density	Quantity	Sub Total
10	Aluminium - Normal	Plate material	$ 4.20	60	mm	2	mm	Rectangular plate 60mm x 2mm	0.000120	0.06	2 710.00	1.00E+00	$ 0.08
												Sub Total	**$ 0.082**

ItemOrder	Process	Use	UnitCost	Unit	Quantity	Multiplier	Mult. Val.	Sub Total
10	Machining Setup, Install and Remove		$ 1.30	unit	1			$ 1.30
20	Laser cut		$ 0.01	cm	254	Materail - Aluminium	1	$ 2.54
30	Ratchet <= 25.4 mm	For M6 bolt	$ 0.75	unit	2	Fastener Engagement Length > 2D	1.25	$ 1.88
							Sub Total	**$ 5.72**

ItemOrder	Fastener	Use	UnitCost	Size1	Unit1	Size2	Unit2	Quantity	Sub Total
10	Bolt, Grade 8.8 (SAE 5)	Assemble plate on the engine	0.04	6	mm	20	mm	2	$ 0.08
								Sub Total	**$ 0.08**

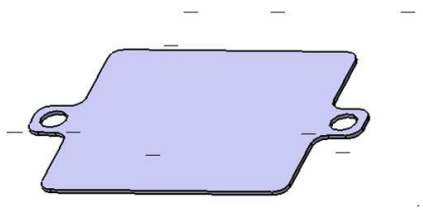

Vue de face
Echelle : 1:1

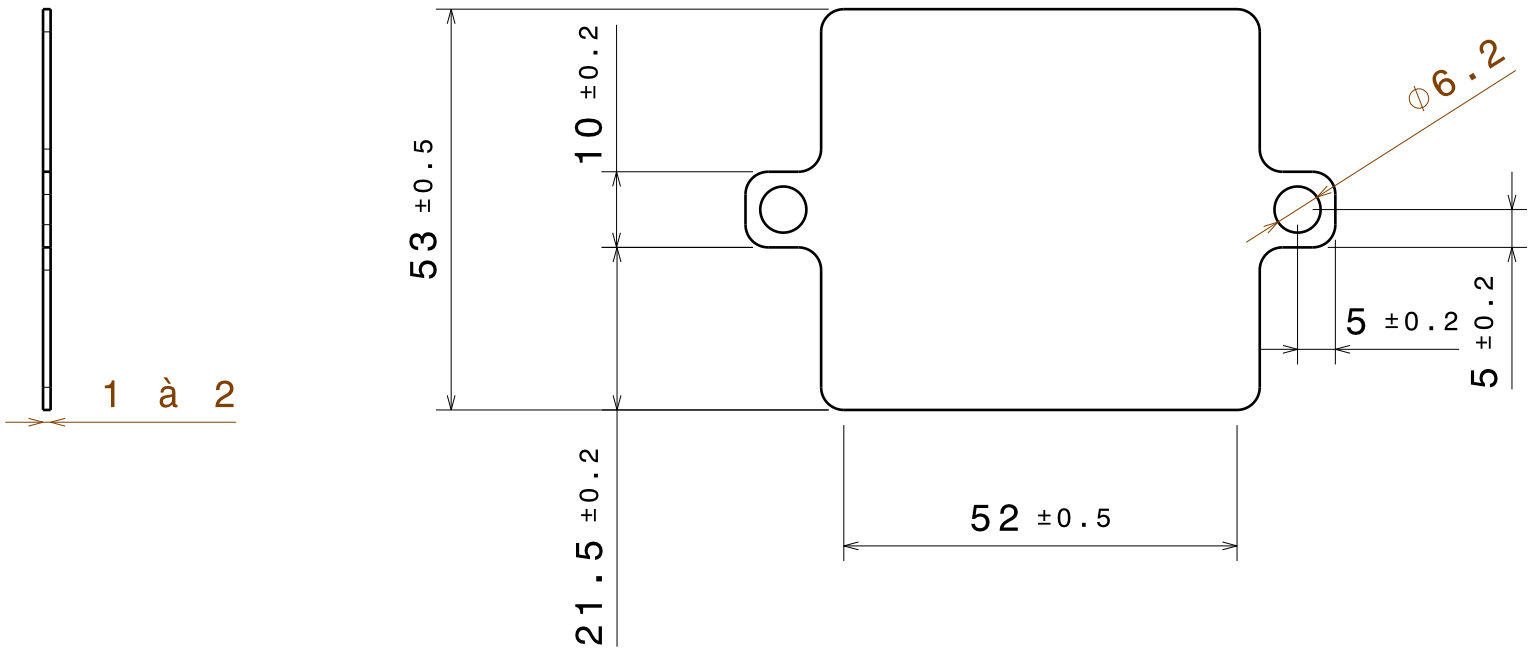

Rayon de congé libre

Tolérances générales ISO 2768 - mK

Taille A4		Ecurie Piston Sport Auto
Dessiné par Martin ZELLER	Date 11/28/2014	Désignation Plaque PAIR
Coordonnées 06 78 52 72 06 martin.zeller@ecl13.ec-lyon.fr		Quantité 2 / Matériau aluminium laissé libre / Version 1.1
Plan vérifié par CCN 62		Echelle 1:1 / Numéro du plan 15-M-007 / Feuille 1/1

University	Ecole Cenrale de Lyon	**Car #**	81	**Asm Cost**	395.71
System	Engine and Drivetrain			**Qty**	1
Assembly	Exhaust system	**FileLink1**			
P/N Base	EN A0002	**FileLink2**		**Extended Cost**	$ 395.71
Suffix	AA	**FileLink3**			
Details					

ItemOrder	Part	Part Cost	Quantity	Sub Total
10	Exhaust tip	$ 4.86	4	$ 19.43
20	Exhaust flange	$ 2.00	4	$ 8.00
30	Exhaust headers	$ 77.14	1	$ 77.14
40	Primary collector	$ 20.36	2	$ 40.72
50	Primary collector tubing	$ 47.99	1	$ 47.99
60	Secondary collector	$ 27.81	1	$ 27.81
70	Secondary collector tubing	$ 32.93	1	$ 32.93
80	Muffler	*$ 60.94*	1	$ 60.94
			Sub Total	**$ 314.96**

ItemOrder	Material	Use	UnitCost	Size1	Unit1	Size2	Unit2	Area Name	Area	Length	Density	Quantity	Sub Total
10	Spring, Tension (General)		$ 1.00									5.00	$ 5.00
20	Exhaust System Ceramic Coating		$ 25.00	2.34	m							1.00	$ 58.50
												Sub Total	**$ 63.50**

ItemOrder	Process	Use	UnitCost	Unit	Quantity	Multiplier	Mult. Val.	Sub Total
10	Weld	Tip welding on headers	$ 0.15	cm	40			$ 6.00
20	Assemble, 1kg, Loose	Assemble flange to headers	$ 0.06	unit	4			$ 0.24
30	Assemble,1kg, Line on line	Assemble collector to header	$ 0.19	unit	4			$ 0.76
40	Ratchet <=25,4mm	Tighten header's nut	$ 0.75	unit	4			$ 3.00
50	Assemble, 1kg, Interference	Assemble headers to engine	$ 0.38	unit	1			$ 0.38
60	Assemble, 1kg, Interference	Assemble Primary collector to headers	$ 0.38	unit	2			$ 0.76
70	Assemble, 1kg, Interference	Assemble Primary collector tubing to collector	$ 0.38	unit	2			$ 0.76
80	Assemble, 1kg, Interference	Assemble secondary collector to primary tubing	$ 0.38	unit	1			$ 0.38
90	Assemble, 1kg, Interference	Assemble tubing to collector	$ 0.38	unit	1			$ 0.38
100	Assemble, 3kg, Line on line	Muffler	$ 0.38	unit	1			$ 0.38
110	Ratchet <=25,4mm	Tighten Muffler on tubing	$ 0.75	unit	3			$ 2.25
							Sub Total	**$ 15.29**

ItemOrder	Fastener	Use	UnitCost	Size1	Unit1	Size2	Unit2	Quantity	Sub Total
10	Bolt,Grade 8.8 (SAE)	Mufflar bolts	$ 0.10	8	mm			3	$ 0.30
20	Nut, Grade 8.8 (SAE 5)	Header's nut	$ 0.04	8	mm			8	$ 0.32
								Sub Total	**$ 0.62**

ItemOrder	Tooling	Use	UnitCost	Unit	Quantity	PVF	FractionIncluded	Sub Total
10	Welds - Welding Fixture	Exemple de Tooling	$ 500.00	point	8	3000	1	$ 1.33
							Sub Total	**$ 1.33**

University	Ecole Centrale de Lyon			**Car #**	81	**Part Cost**	$ 4.86
System	Engine and Drivetrain	**FileLink1**				**Qty**	4
Assembly	Exhaust system	**FileLink2**		**FileLink1**			
Part	Exhaust tip	**FileLink3**		**FileLink2**		**Extended Cost**	$ 19.43
P/N Base	EN 02001			**FileLink3**			
Suffix	AA						
Details							

ItemOrder	Material	Use	UnitCost	Size1	Unit1	Size2	Unit2	Area Name	Area	Length	Density	Quantity	Sub Total
10	Steel, Mild	Flange material	$ 2.25	45	mm			Round	1.59E-03	0.027	7 800	1.00	$ 0.75
												Sub Total	**$ 0.75**

ItemOrder	Process	Use	UnitCost	Unit	Quantity	Multiplier	Mult. Val.	Sub Total
10	Machining Setup, Install and remove	Setup for laser cutting	$ 1.30	unit	1	4 parts made from 1 setup	0.25	$ 0.33
20	Machining	Cutout shape	$ 0.04	cm^3	25	Material - Stainless steel	3.75	$ 3.78
							Sub Total	**$ 4.11**

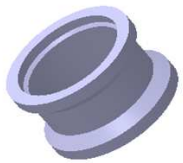

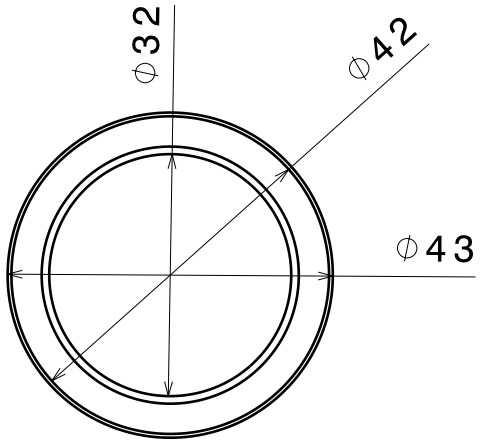

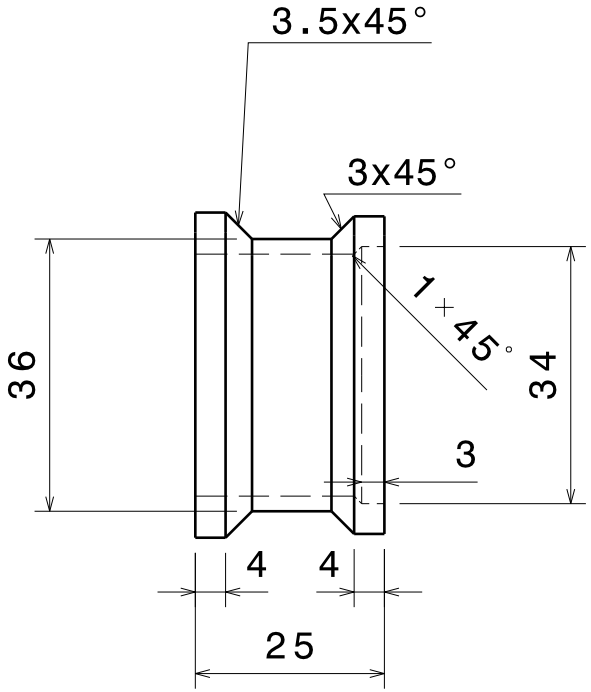

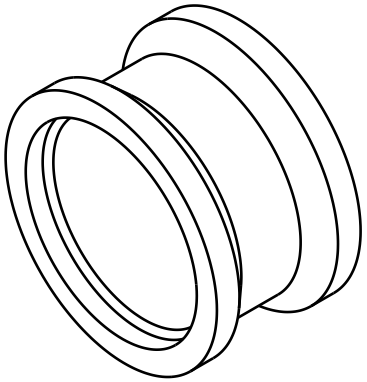

Tolérances générales ISO 2768 - mK

Taille A4		Ecurie Piston Sport Auto
Dessiné par Clément CASTELLAN	Date 11/12/2014	Désignation: Embout collecteur
Coordonnées: clement.castellan@ecl13.ec-lyon.fr 06.34.33.50.85		Quantité: 4 / Matériau: Acier S235 / Version: 1.0
Vérifié par Fabien ROBERT		Echelle 1:1 / Numéro du plan 15-B-044 / Feuille 1/1

University	Ecole Centrale de Lyon			**Car #**	81	**Part Cost**	$ 2.00
System	Engine and Drivetrain	**FileLink1**				**Qty**	4
Assembly	Exhaust system	**FileLink2**		**FileLink1**			
Part	Exhaust flange	**FileLink3**		**FileLink2**		**Extended Cost**	$ 8.00
P/N Base	EN 02002			**FileLink3**			
Suffix	AA						
Details							

ItemOrder	Material	Use	UnitCost	Size1	Unit1	Size2	Unit2	Area Name	Area	Length	Density	Quantity	Sub Total
10	Steel, Mild (per kg)	Flange material	$ 2.25	80	mm	50	mm	rectangular	4.00E-03	0.005	7800	1	$ 0.35
													$ -
												Sub Total	**$ 0.35**

ItemOrder	Process	Use	UnitCost	Unit	Quantity	Multiplier	Mult. Val.	Sub Total
10	Machining Setup, Install and remove	Setup for laser cutting	$ 1.30	unit	1	4 parts made from 1 setup	0.25	$ 0.33
20	Laser Cut	Flange cut	$ 0.01	cm	35.3	Material - Steel	3.75	$ 1.32
							Sub Total	**$ 1.65**

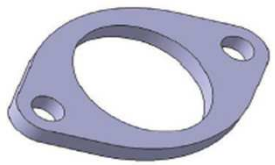

University	Ecole Centrale de Lyon			**Car #**	81	**Part Cost**	$ 77.14
System	Engine and Drivetrain	**FileLink1**				**Qty**	1
Assembly	Exhaust system	**FileLink2**		**FileLink1**			
Part	Exhaust headers	**FileLink3**		**FileLink2**		**Extended Cost**	$ 77.14
P/N Base	EN 02003			**FileLink3**			
Suffix	AA						
Details							

ItemOrder	Material	Use	UnitCost	Size1	Unit1	Size2	Unit2	Area Name	Area	Length	Density	Quantity	Sub Total
10	Steel, Stainless	Header material	$ 2.25					Round 34mm*2,5mm	9.E-05	1.41	7 800.00	1	$ 2.10
												Sub Total	**$ 2.10**

ItemOrder	Process	Use	UnitCost	Unit	Quantity	Multiplier	Mult. Val.	Sub Total
10	Tube bends		$ 0.75	bend	12			$ 9.00
20	Tube cut		$ 0.15	cut	68			$ 10.20
30	Tube end preperation for welding		$ 0.75	end	40			$ 30.00
40	Weld - Round Tubing		$ 0.38	cm	68			$ 25.84
							Sub Total	**$ 75.04**

ItemOrder	Tooling	Use	UnitCost	Unit	Quantity	PVF	FracIncld	Sub Total
10	Welds - Welding Fixture		$ 500	point	40	3000	1	$ 6.67
							Sub Total	**$ 6.67**

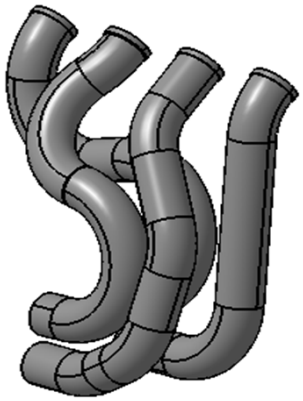

University	Ecole Centrale de Lyon			**Car #**	81	**Part Cost**	$ 20.36
System	Engine and Drivetrain	**FileLink1**				**Qty**	2
Assembly	Exhaust system	**FileLink2**		**FileLink1**			
Part	Primary collector	**FileLink3**		**FileLink2**		**Extended Cost**	$ 40.72
P/N Base	EN 02004			**FileLink3**			
Suffix	AA						
Details							

ItemOrder	Material	Use	UnitCost	Size1	Unit1	Size2	Unit2	Area Name	Area	Length	Density	Quantity	Sub Total
10	Steel, Stainless	Header material	$ 2.25					Round 34mm*2,5mm	9.E-05	0.20	7 800.00	1	$ 0.30
20	Steel, Stainless	Header material	$ 2.25					Round 42,4mm*1,6mm	7.E-05	2.00E-03	7 800.00	1	2.38E-03
												Sub Total	**$ 0.30**

ItemOrder	Process	Use	UnitCost	Unit	Quantity	Multiplier	Mult. Val.	Sub Total
10	Tube cut		$ 0.15	cut	25			$ 3.81
20	Tube end preperation for welding		$ 0.75	end	9			$ 6.75
30	Weld - Round Tubing		$ 0.38	cm	25			$ 9.50
							Sub Total	**$ 20.06**

ItemOrder	Tooling	Use	UnitCost	Unit	Quantity	PVF	FracIncld	Sub Total
10	Welds - Welding Fixture		$ 500	point	40	3000	1	$ 6.67
							Sub Total	**$ 6.67**

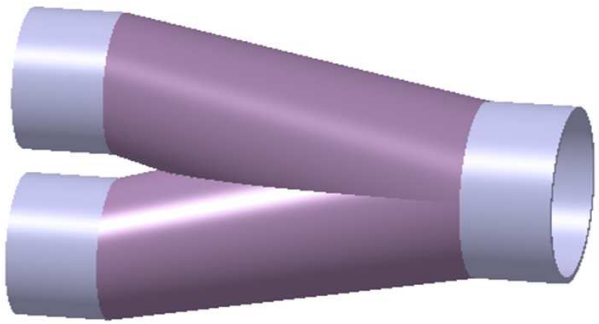

University	Ecole Centrale de Lyon			**Car #**	81	**Part Cost**	$ 47.99
System	Engine and Drivetrain	**FileLink1**				**Qty**	1
Assembly	Exhaust system	**FileLink2**		**FileLink1**			
Part	Primary collector tubing	**FileLink3**		**FileLink2**		**Extended Cost**	$ 47.99
P/N Base	EN 02005			**FileLink3**			
Suffix	AA						
Details							

ItemOrder	Material	Use	UnitCost	Size1	Unit1	Size2	Unit2	Area Name	Area	Length	Density	Quantity	Sub Total
10	Steel, Stainless	Header material	$ 2.25					Round 42,4mm*1,6mm	7.E-05	0.59	7 800.00	1	$ 0.70
												Sub Total	**$ 0.70**

ItemOrder	Process	Use	UnitCost	Unit	Quantity	Multiplier	Mult. Val.	Sub Total
10	Tube bends		$ 0.75	bend	4			$ 3.00
20	Tube cut		$ 0.15	cut	59			$ 8.90
30	Tube end preperation for welding		$ 0.75	end	14			$ 10.50
40	Weld - Round Tubing		$ 0.38	cm	59.36			$ 22.56
							Sub Total	**$ 44.96**

ItemOrder	Tooling	Use	UnitCost	Unit	Quantity	PVF	FracIncld	Sub Total
10	Welds - Welding Fixture		$ 500	point	14	3000	1	$ 2.33
							Sub Total	**$ 2.33**

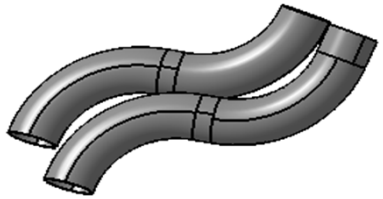

University	Ecole Centrale de Lyon			**Car #**	81	**Part Cost**	$ 27.81
System	Engine and Drivetrain	**FileLink1**				**Qty**	1
Assembly	Exhaust system	**FileLink2**		**FileLink1**			
Part	Secondary collector	**FileLink3**		**FileLink2**		**Extended Cost**	$ 27.81
P/N Base	EN 02006			**FileLink3**			
Suffix	AA						
Details							

ItemOrder	Material	Use	UnitCost	Size1	Unit1	Size2	Unit2	Area Name	Area	Length	Density	Quantity	Sub Total
10	Steel, Stainless	Header material	$ 2.25					Round 42,4mm*1,6mm	7.E-05	0.20	7 800.00	1	$ 0.24
20	Steel, Stainless	Header material	$ 2.25					Round 50mm*1,5mm	8.E-05	2.00E-03	7 800.00	1	2.63E-03
												Sub Total	**$ 0.24**

ItemOrder	Process	Use	UnitCost	Unit	Quantity	Multiplier	Mult. Val.	Sub Total
10	Tube cut		$ 0.15	cut	31			$ 4.65
20	Tube end preperation for welding		$ 0.75	end	9			$ 6.75
30	Weld - Round Tubing		$ 0.38	cm	25			$ 9.50
							Sub Total	**$ 20.90**

ItemOrder	Tooling	Use	UnitCost	Unit	Quantity	PVF	FracIncld	Sub Total
10	Welds - Welding Fixture		$ 500	point	40	3000	1	$ 6.67
							Sub Total	**$ 6.67**

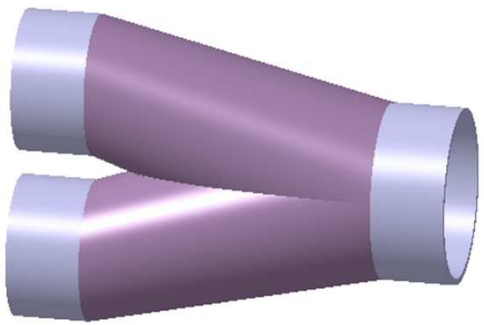

University	Ecole Centrale de Lyon			**Car #**	81	**Part Cost**	$ 32.93
System	Engine and Drivetrain	**FileLink1**				**Qty**	1
Assembly	Exhaust system	**FileLink2**		**FileLink1**			
Part	Secondary collector tubing	**FileLink3**		**FileLink2**		**Extended Cost**	$ 32.93
P/N Base	EN 02007			**FileLink3**			
Suffix	AA						
Details							

ItemOrder	Material	Use	UnitCost	Size1	Unit1	Size2	Unit2	Area Name	Area	Length	Density	Quantity	Sub Total
10	Steel, Stainless	Header material	$ 2.25					Round 50mm*1,5mm	8.E-05	0.31	7 800.00	1	$ 0.40
												Sub Total	**$ 0.40**

ItemOrder	Process	Use	UnitCost	Unit	Quantity	Multiplier	Mult. Val.	Sub Total
10	Tube bends		$ 0.75	bend	2			$ 1.50
20	Tube cut		$ 0.15	cut	20			$ 3.00
30	Tube end preperation for welding		$ 0.75	end	14			$ 10.50
40	Weld - Round Tubing		$ 0.38	cm	40			$ 15.20
							Sub Total	**$ 30.20**

ItemOrder	Tooling	Use	UnitCost	Unit	Quantity	PVF	FracIncld	Sub Total
10	Welds - Welding Fixture		$ 500	point	14	3000	1	$ 2.33
							Sub Total	**$ 2.33**

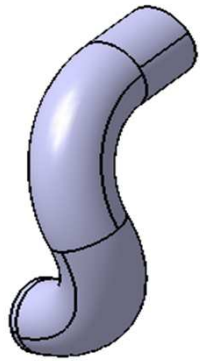

University	Ecole Centrale de Lyon			**Car #**	81	**Part Cost**	$ 60.94
System	Engine and Drivetrain	**FileLink1**				**Qty**	1
Assembly	Exhaust system	**FileLink2**		**FileLink1**			
Part	Muffler	**FileLink3**		**FileLink2**		**Extended Cost**	$ 60.94
P/N Base	EN 02008			**FileLink3**			
Suffix	AA						
Details	Cost as made						

ItemOrder	Material	Use	UnitCost	Size1	Unit1	Size2	Unit2	Area Name	Area	Length	Density	Quantity	Sub Total
10	Steel, Stainless		$ 2.25	0.4	m	0.5	m	Rectangular 0,4*0,5m	2.E-01	0.00	7 800.00	1	$ 7.02
20	Carbon Fiber, 1 Ply		$ 200.00	0.1	kg							1	$ 20.00
												Sub Total	**$ 27.02**

ItemOrder	Process	Use	UnitCost	Unit	Quantity	Multiplier	Mult. Val.	Sub Total
10	Sheet metal bends		$ 0.25	bend	2			$ 0.50
20	Sheet metal bends		$ 0.25	cut	2			$ 0.50
30	Sheet metal punching		$ 0.03	end	700			$ 21.00
40	Sheet metal stamping		$ 0.03	cm	200			$ 6.00
50	Assemble, 1kg, line on line		$ 0.13	unit	4			$ 0.52
60	Lamination, Manual		$ 35.00	m^2	0.12			$ 4.20
70	Cure, Room Temperature		$ 10.00	m^2	0.12			$ 1.20
							Sub Total	**$ 33.92**

University	Ecole Cenrale de Lyon	**Car #**	81	**Asm Cost**	177.86
System	Engine and Drivetrain			**Qty**	1
Assembly	Fuel tank assembly	**FileLink1**			
P/N Base	EN A0003	**FileLink2**		**Extended Cost**	$ 177.86
Suffix	AA	**FileLink3**			
Details	Fuel tank with filler neck				

ItemOrder	Part	Part Cost	Quantity	Sub Total
10	Fuel tank	$ 73.93	1	$ 73.93
20	Filler tube	$ 15.01	1	$ 15.01
30	Filler cap	$ 19.19	1	$ 19.19
40	Filler tube collar	$ 2.17	1	$ 2.17
50	Fuel Tank tab	$ 2.22	$ 3.00	$ 6.66
60	Front mounts	$ 8.11	$ 1.00	$ 8.11
70	Filler tube mount	$ 1.55	$ 1.00	$ 1.55
			Sub Total	**$ 126.62**

ItemOrder	Material	Use	UnitCost	Size1	Unit1	Size2	Unit2	Area Name	Area	Length	Density	Quantity	Sub Total
10	Mount, Vibration-Damping Sandwich	Vibration-Damping Sandwich for fuel tank, bolt include	$ 8.10	30	mm							4.00	$ 32.40
20	Hose, Silicone	Filler hose raccording Filler tube and Filler neck	$ 20.68	44	mm							0.50	$ 10.34
												Sub Total	**$ 42.74**

ItemOrder	Process	Use	UnitCost	Unit	Quantity	Multiplier	Mult. Val.	Sub Total
10	Weld	Fuel tank tab + Front + Filler neck mounts on frame	$ 0.15	cm	9.3			$ 1.40
20	Assemble, 1kg, Loose	Vibration dampings sandwich on Fuel tank	$ 0.06		4			$ 0.24
30	Ratchet, <= 25.4mm	Tighten vibration damping sandwich on Fuel Tank	$ 0.75	unit	4			$ 3.00
40	Assemble, 3 kg, Line-on-Line	Fuel tank on the tabs	$ 0.38	unit	1			$ 0.38
50	Ratchet, <= 25.4mm	Tighten Fuel tank on the tabs	$ 0.75	unit	4			$ 3.00
60	Assemble, 1kg, Loose	Filler collar on Filler tube	$ 0.06	unit	1			$ 0.06
70	Assemble, 1kg, Loose	Clamps on the Filler hose	$ 0.06	unit	2			$ 0.12
80	Assemble, 1kg, Interferance	Filler hose on the filler neck and Filler tube	$ 0.19	unit	2			$ 0.38
90	Screwdriver > 1 Turn	Hose clamps	$ 0.50	unit	2			$ 1.00
100	Ratchet <= 6.35 mm	Filler tube collar on collar tab	$ 0.50	unit	1			$ 0.50
110	Reaction Tool <= 6.35 mm	Tighten Filler tube collar on collar tab	$ 0.25	unit	1			$ 0.25
120	Hand, Loose > 25.4 mm	Filler tube cap	$ 0.75	unit	1			$ 0.75
							Sub Total	**$ 4.64**

ItemOrder	Fastener	Use	UnitCost	Size1	Unit1	Size2	Unit2	Quantity	Sub Total
10	Nut, Grade 8.8 (SAE 5)	M8 nut for vibration damping sandwich	$ 0.04	8	mm			8	$ 0.32
20	Washer, Grade 8.8 (SAE 5)	M8 washer for vibration damping sandwich	$ 0.01	8	mm			8	$ 0.08
30	Bolt, Grade 8.8 (SAE 5)	M6 bolt for collar on collar mount	$ 0.04	6	mm	20	mm	1	$ 0.04
40	Nut, Grade 8.8 (SAE 5)	M6 nut for collar on collar mount	$ 0.03	6	mm			1	$ 0.03
50	Washer, Grade 8.8 (SAE 5)	M6 washer for collar on collar mount	$ 0.01	6	mm			2	$ 0.02
60	Hose Clamp, Worm Drive	Clamps for filler neck and tube	$ 0.69	48	mm			2	$ 1.38
								Sub Total	**$ 1.87**

ItemOrder	Tooling	Use	UnitCost	Unit	Quantity	PVF	FractionIncluded	Sub Total
10	Welds - Welding Fixture		$ 500.00	point	12	3000	1	$ 2.00
							Sub Total	**$ 2.00**

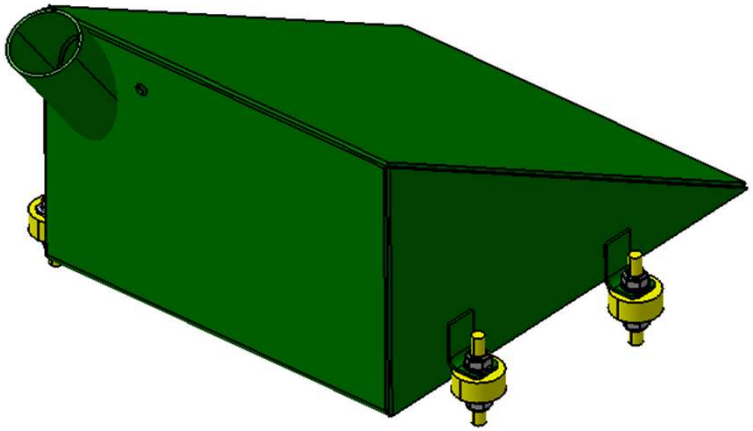

University	Ecole Centrale de Lyon			**Car #**	81	**Part Cost**	$ 73.93
System	Engine and Drivetrain	**FileLink1**				**Qty**	1
Assembly	Fuel tank assembly	**FileLink2**		**FileLink1**			
Part	Fuel tank	**FileLink3**		**FileLink2**		**Extended Cost**	$ 73.93
P/N Base	EN 03001			**FileLink3**			
Suffix	AA						
Details							

ItemOrder	Material	Use	UnitCost	Size1	Unit1	Size2	Unit2	Area Name	Area	Length	Density	Quantity	Sub Total
10	Aluminum, Normal (per kg)	Fuel tank material	$ 4.20	500	mm	2.5	mm	Rectangular plate 500mm x 700mm	1.250E-03	0.700	2 710	1.00	$ 9.96
30	Aluminum, Normal (per kg)	Nek tube	$ 4.20	45	mm	2	mm	Circular area (tube) 45mm x 2mm	2.70E-04	0.100	2 710	1.00	$ 0.31
40	Fitting, Weld-in, Male, Aluminum	For Dash6 connexion	$ 1.85	8	mm							3.00	$ 5.55
50	Adhesive	3M, DP460 glue for fittings	$ -										$ -
												Sub Total	**$ 15.82**

ItemOrder	Process	Use	UnitCost	Unit	Quantity	Multiplier	Mult. Val.	Sub Total
10	Machining Setup, Install and Remove		$ 1.30	Unit	1	Material - Aluminum	1	$ 1.30
20	Laser cut	Main plate	$ 0.01	cm	219	Material - Aluminum	1	$ 2.19
30	Laser cut	2 Side plates	$ 0.01	cm	167.8	Material - Aluminum	1	$ 1.68
40	Laser cut	Upper plate	$ 0.01	cm	120	Material - Aluminum	1	$ 1.20
50	Laser cut	Inside wall cut	$ 0.01	cm	48			$ 0.48
60	Sheet metal bends	Main plate bend	$ 0.25	Bend	1			$ 0.25
70	Sheet metal bends	Inside wall bending	$ 0.25	Bend	2			$ 0.50
80	Tube cut	Neck tube cut	$ 0.15	cm	4.5			$ 0.68
130	Weld		$ 0.15	cm	257.4			$ 38.61
140	Weld - Round Tubing	Neck welding	$ 0.38	cm	4.5			$ 1.71
150	Machining Setup, Instal and Remove		$ 1.30	Unit	1			$ 1.30
160	Laser cut	4 x Fittings cut	$ 0.01	cm	102.1	Material - Aluminum	1	$ 1.02
170	Sheet metal bends	Fittings bends	$ 0.25	Bend	4			$ 1.00
180	Liquid Applicator Gun	For fittings glue	$ 0.02	cm	60			$ 1.20
							Sub Total	**$ 53.11**

ItemOrder	Tooling	Use	UnitCost	Unit	Quantity	PVF	FracIncld	Sub Total
10	Welds - Welding Fixture		$ 500.00	Point	30	3000	1	$ 5.00
							Sub Total	**$ 5.00**

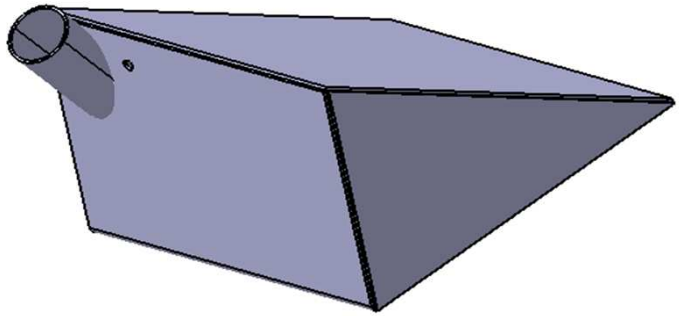

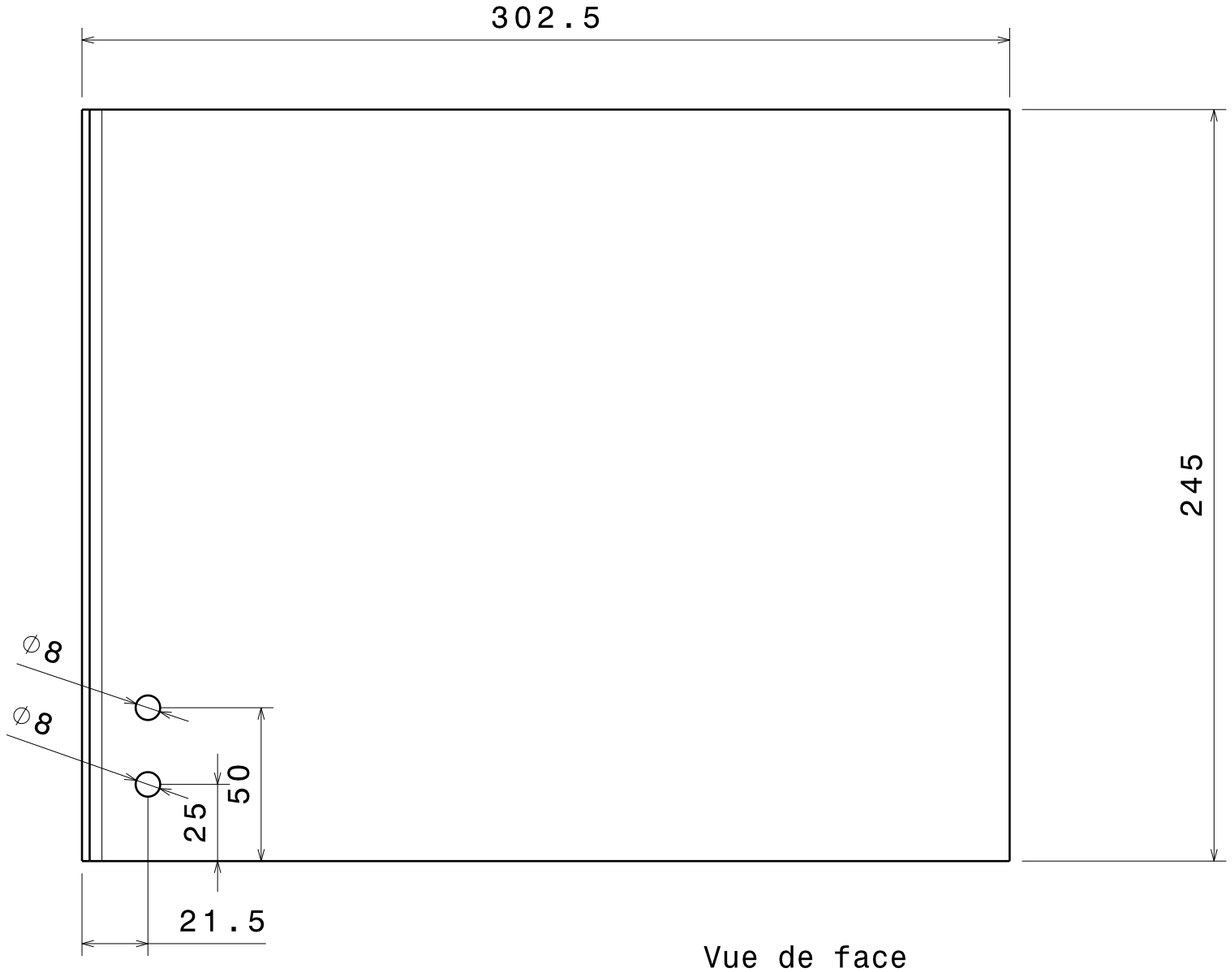

Vue de face
Echelle : 1:2

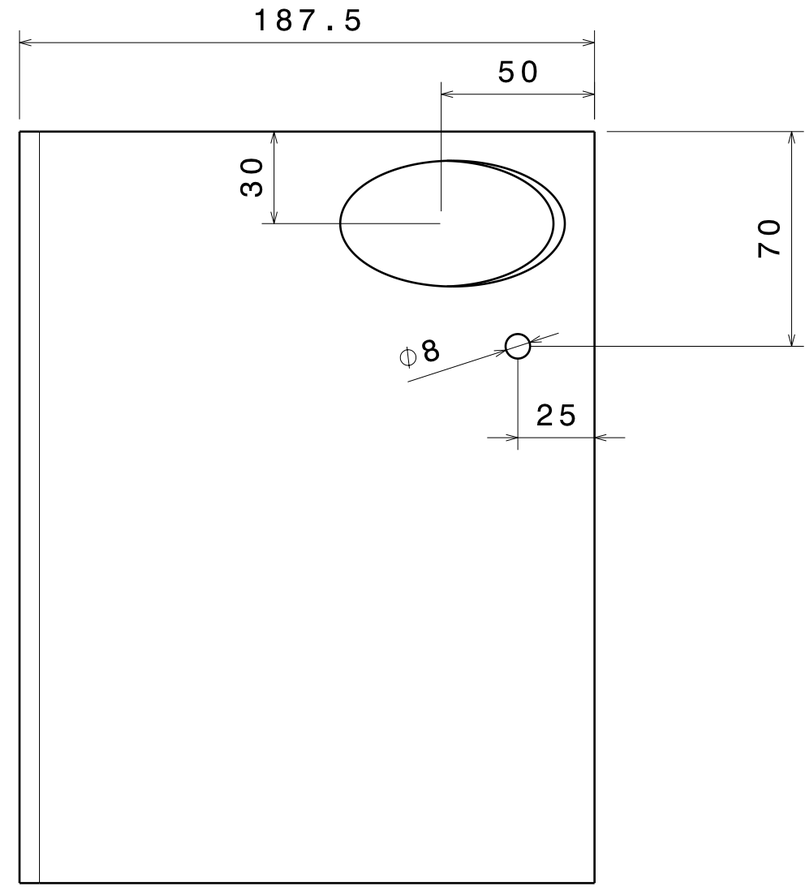

Vue de gauche
Echelle : 1:2

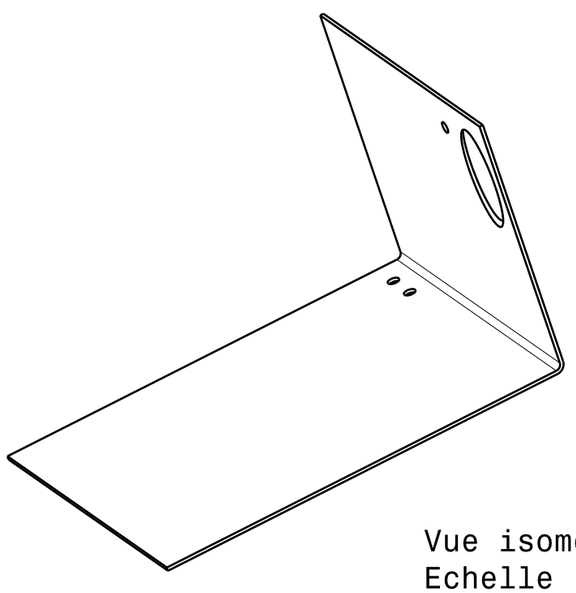

Vue isométrique
Echelle : 1:4

Remarque : Elipse
pouvant être découpée
droite

Tolérances générales ISO 2768-mK

Taille A3		Ecurie Piston Sport Auto
Dessiné par Martin ZELLER	Date 3/19/2015	Désignation Plaque inférieure réservoir
Coordonnées 06 78 52 72 06 martin.zeller@ecl13.ec-lyon.fr		Quantité 1 / Matériau Alu 5754 ep 2.5mm / Version 2.0
Plan vérifié par SCU		Echelle 1:2 / Numéro du plan 15-M-080 / Feuille 1/1

Vue de face
Echelle : 1:3

Tolérances générales ISO 2768-mK

Taille A4		Ecurie Piston Sport Auto
Dessiné par Martin ZELLER	Date 3/19/2015	Désignation Plaque supérieure réservoir
Coordonnées 06 78 52 72 06 martin.zeller@ecl13.ec-lyon.fr		Quantité 1 / Matériau Alu 5754 ep 2.5mm / Version 2.0
Plan vérifié par SCU 77		Echelle 1:3 / Numéro du plan 15-M-078 / Feuille 1/1

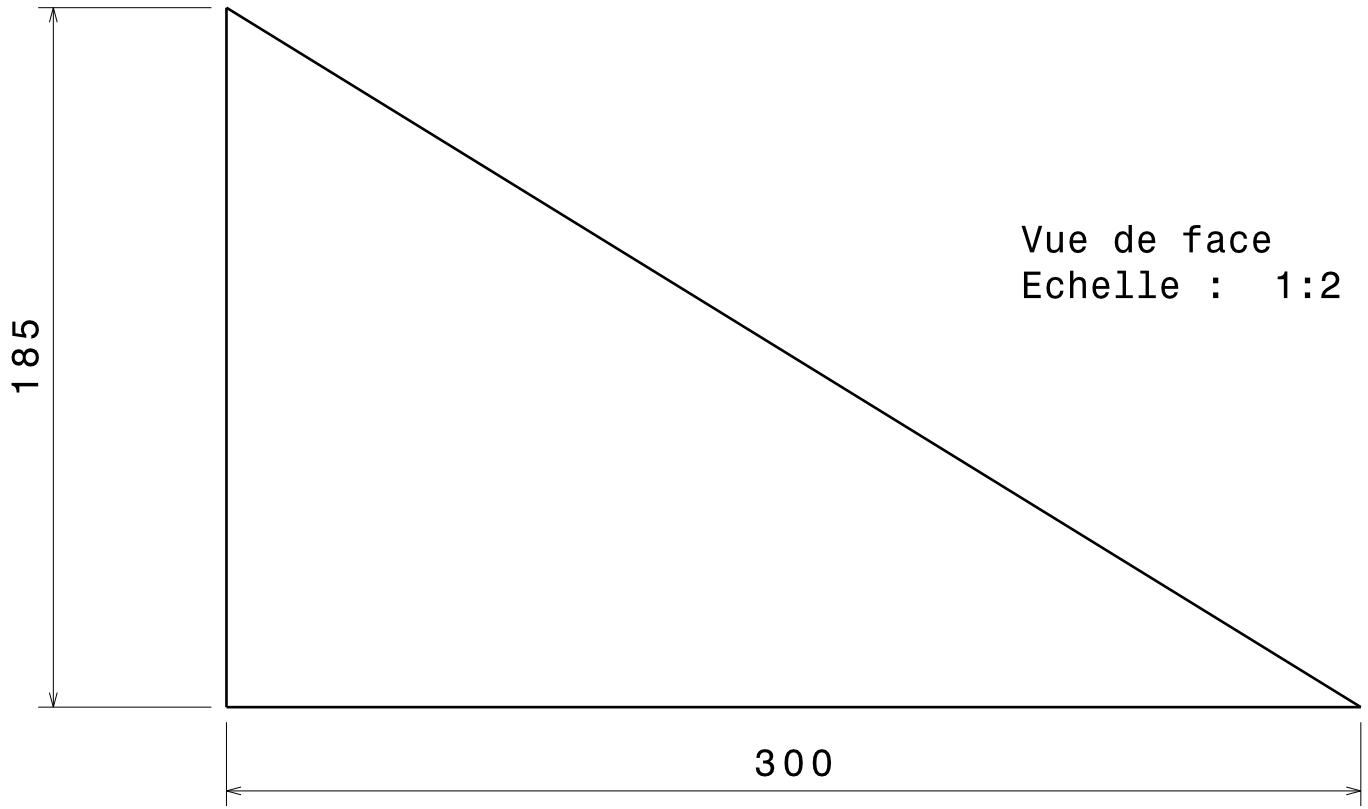

Vue de face
Echelle : 1:2

Tolérances générales ISO 2768-mK

Taille A4		Ecurie Piston Sport Auto
Dessiné par Martin ZELLER	Date 3/19/2015	Désignation Plaque latérale réservoir
Coordonnées 06 78 52 72 06 martin.zeller@ecl13.ec-lyon.fr		Quantité 2 / Matériau Alu 5754 ep 2.5 / Version 2.0
Plan vérifié par SCU 78		Echelle 1:2 / Numéro du plan 15-M-079 / Feuille 1/1

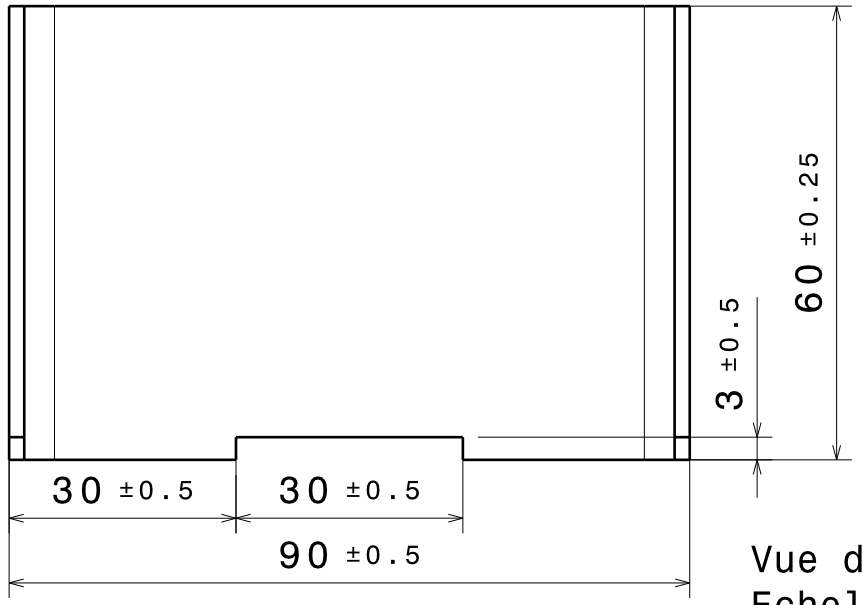

Vue de face
Echelle : 1:1

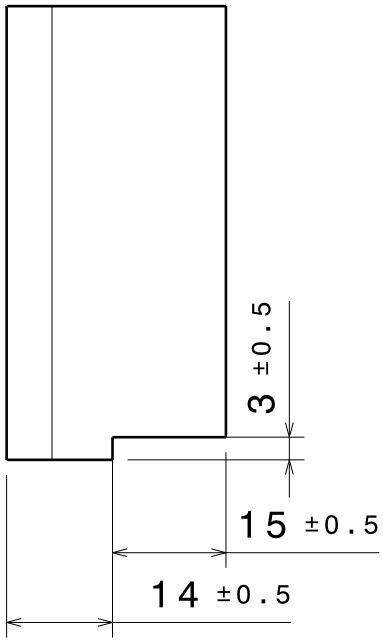

Vue de gauche
Echelle : 1:1

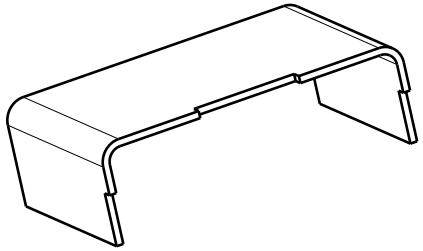

Vue isométrique
Echelle : 1:2

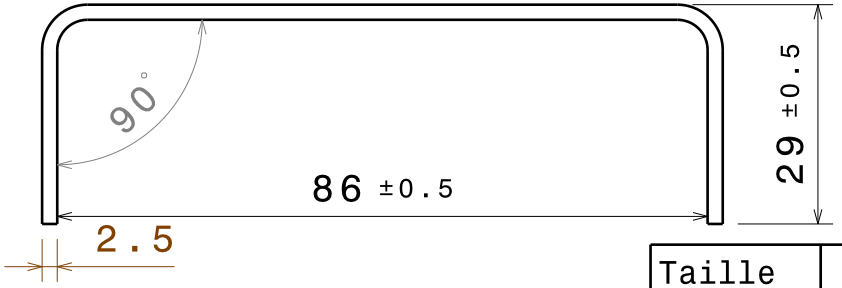

Vue de dessus
Echelle : 1:1

Tolérances générales ISO 2768 - mK

Taille A4		Ecurie Piston Sport Auto
Dessiné par Martin ZELLER	Date 11/24/2014	Désignation Cloison réservoir
Coordonnées 06 78 52 72 06 martin.zeller@ecl13.ec-lyon.fr		Quantité 1 / Matériau Aluminium 5754 / Version 1.0
Plan vérifié par PMR 79		Echelle 1:1 / Numéro du plan 15-M-008 / Feuille 1/1

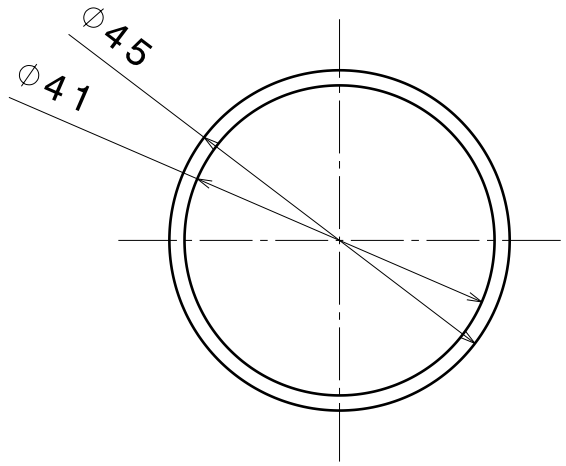

Vue de face
Echelle : 1:1

Vue de gauche
Echelle : 1:1

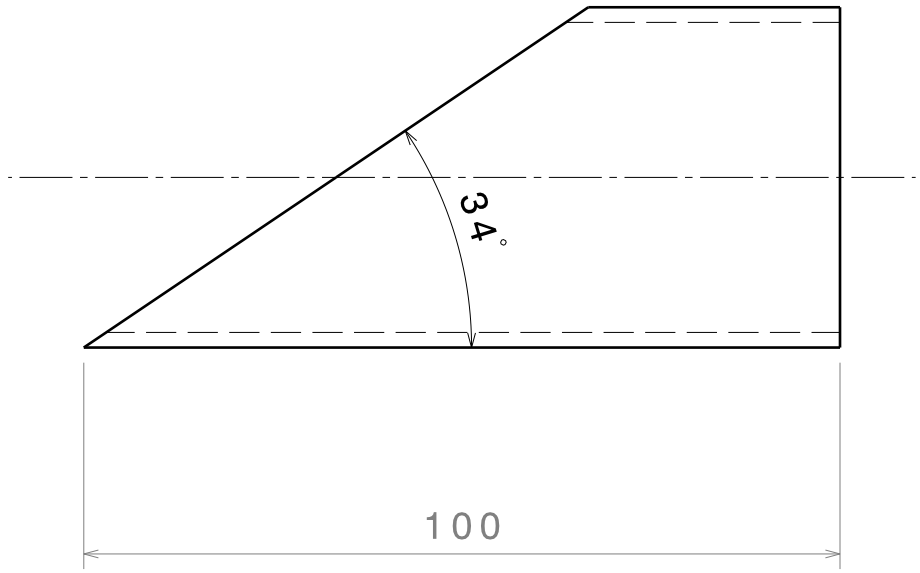

Tolérances générales ISO 2768-mK

Taille A4		Ecurie Piston Sport Auto
Dessiné par Martin ZELLER	Date 3/19/2015	Désignation Tube réservoir
Coordonnées 06 78 52 72 06 martin.zeller@ecl13.ec-lyon.fr		Quantité 1 / Matériau Tube aluminium / Version 2.0
Plan vérifié par SCU 80		Echelle 1:1 / Numéro du plan 15-M-081 / Feuille 1/1

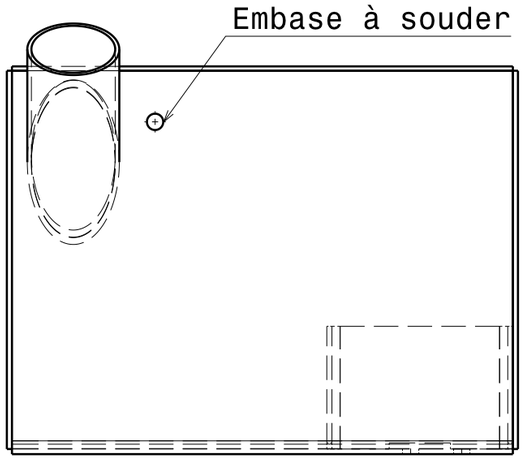

Vue de face
Echelle : 1:3

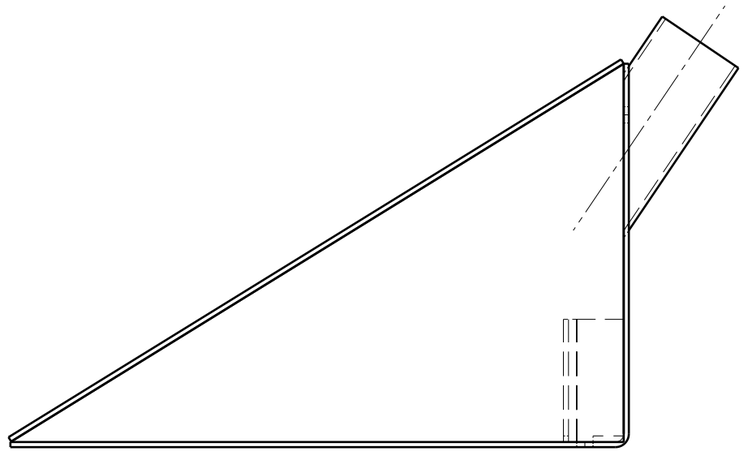

Vue de gauche
Echelle : 1:3

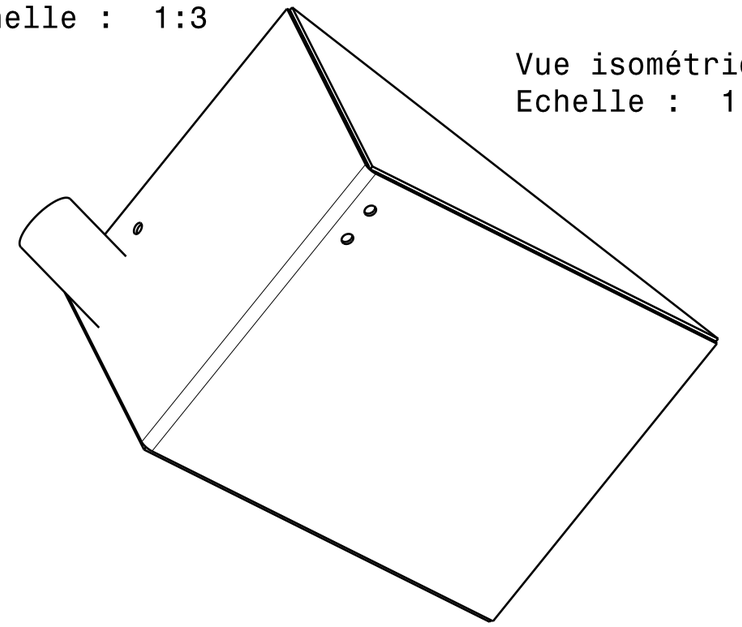

Vue isométrique
Echelle : 1:4

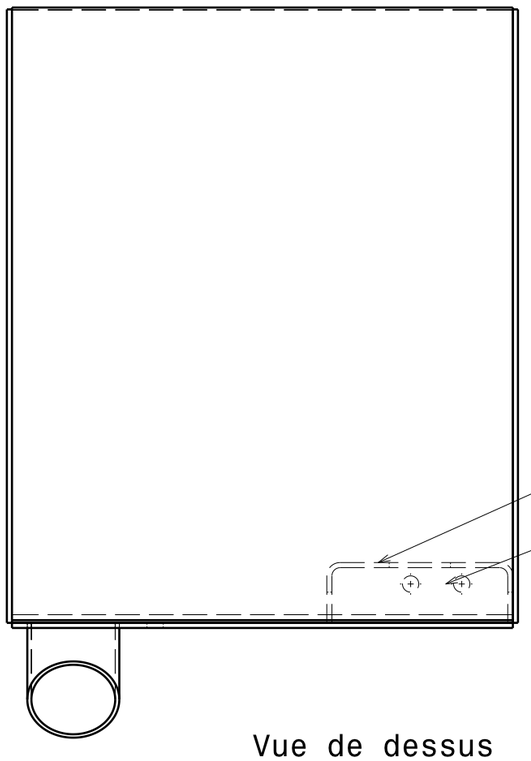

Vue de dessus
Echelle : 1:3

Soudure au quart

Tolérances générales ISO 2768-mK

Taille A3		Ecurie Piston Sport Auto
Dessiné par Martin ZELLER	Date 3/30/2015	Désignation Réservoir
Coordonnées 06 78 52 72 06 martin.zeller@ecl13.ec-lyon.fr		Quantité 1 / Matériau Alu 5754 / Version 2.0
Plan vérifié par FRT		Echelle 1:3 / Numéro du plan 15-G-001 / Feuille 1/1

University	Ecole Centrale de Lyon			**Car #**	81	**Part Cost**	$ 15.01
System	Engine and Drivetrain	**FileLink1**				**Qty**	1
Assembly	Fuel tank assembly	**FileLink2**		**FileLink1**			
Part	Filler tube	**FileLink3**		**FileLink2**		**Extended Cost**	$ 15.01
P/N Base	EN 03002			**FileLink3**			
Suffix	AA						
Details							

ItemOrder	Material	Use	UnitCost	Size1	Unit1	Size2	Unit2	Area Name	Area	Length	Density	Quantity	Sub Total
10	Aluminum, Normal (per kg)	Filler neck body	$ 4.20	45	mm	2	mm	circle area (tube) 45mm x 2mm	2.70E-04	0.215	2710	1	$ 0.66
20	Adapter/L.P./Barb to Male Pipe/90 Deg./Aluminum/Anodized		$ 3.72	6	mm	6	mm					2	$ 7.44
30	Hose, Silicone	Sight tube	$ 2.82	6	mm	0.15	m					0.15	$ 0.42
												Sub Total	**$ 8.52**

ItemOrder	Process	Use	UnitCost	Unit	Quantity	Multiplier	Mult. Val.	Sub Total
10	Tube cut	Filler neck body	$ 0.15	cm	4			$ 0.60
20	Machining Setup, Install and Remove		$ 1.30	Unit	1			$ 1.30
30	Drilled holes < 25.4 mm dia.		$ 0.35	Hole	2			$ 0.70
40	Threading, External (machining)	Thread for cap	$ 0.10	cm	1	Material - Aluminum	1	$ 0.10
50	Weld	Barb fittings welding on tube	$ 0.15	cm	4			$ 0.60
60	Cut (scissors, knife)	Hose cut	$ 0.06	cm	1			$ 0.06
80	Assemble, 1 kg, Interference	Hose mounting	$ 0.19	unit	2			$ 0.38
90	Screwdriver > 1 Turn	Hose clamp	$ 0.50	Unit	2			$ 1.00
							Sub Total	**$ 4.74**

ItemOrder	Fastener	Use	UnitCost	Size1	Unit1	Size2	Unit2	Quantity	Sub Total
10	Hose Clamp, Worm Drive		$ 0.54	10	mm			2	$ 1.08
								Sub Total	**$ 1.08**

ItemOrder	Tooling	Use	UnitCost	Unit	Quantity	PVF	FracIncld	Sub Total
10	Welds - Welding Fixture		$ 500.00	Point	4	3000	1	$ 0.67
							Sub Total	**$ 0.67**

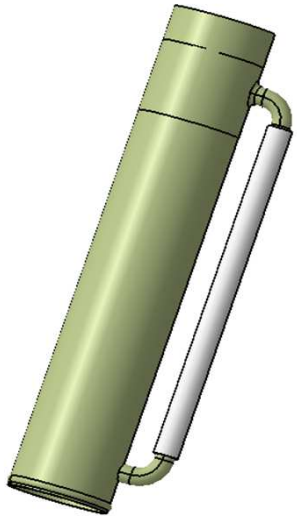

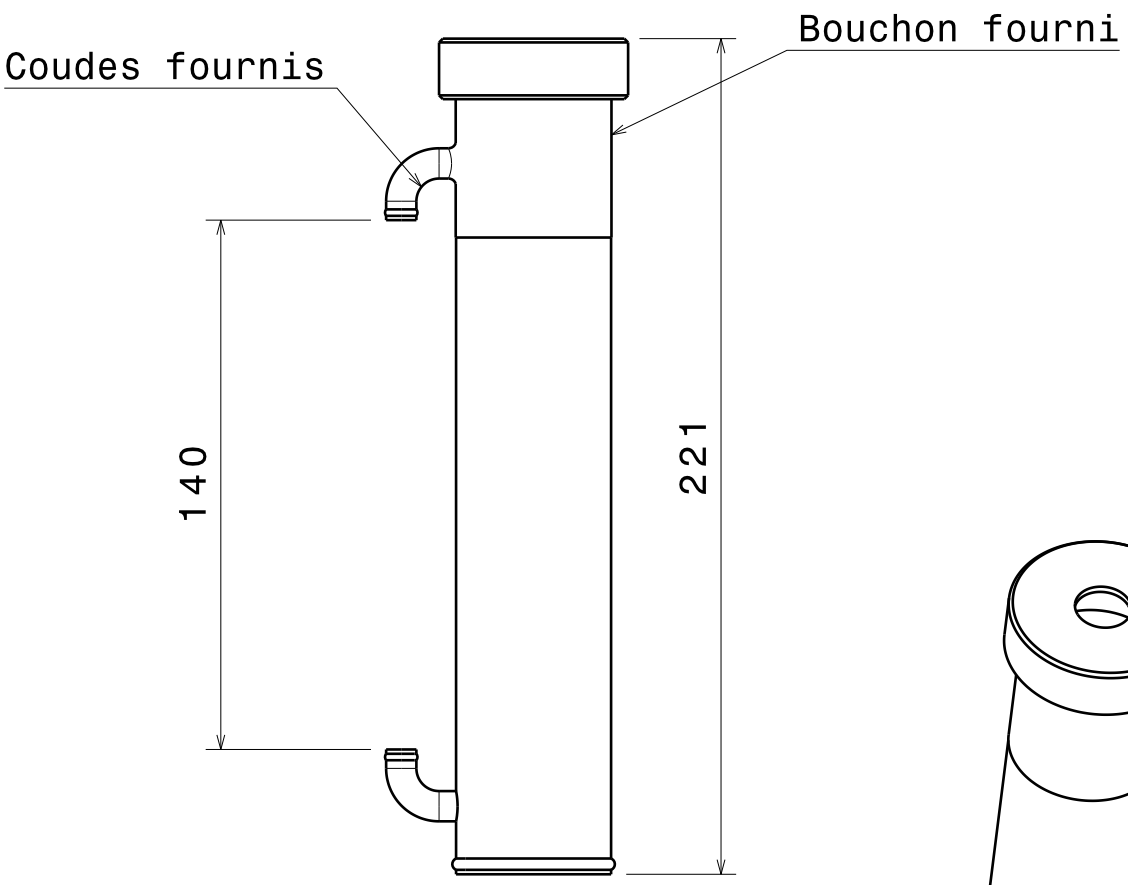

Vue de face
Echelle : 1:2

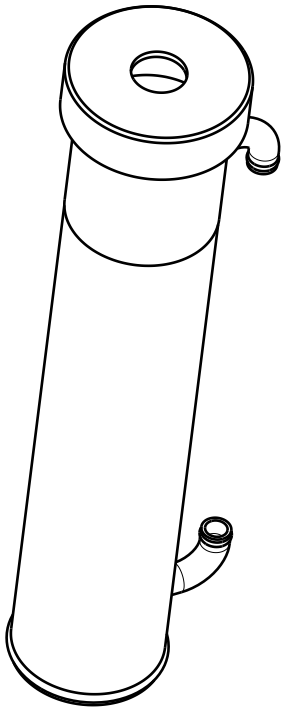

Vue isométrique
Echelle : 1:2

Tolérance générales ISO 2768-mK

Taille A4		Ecurie Piston Sport Auto
Dessiné par Martin ZELLER	Date 3/30/2015	Désignation Goulotte réservoir
Coordonnées 06 78 52 72 06 martin.zeller@ecl13.ec-lyon.fr	Quantité 1	Matériau Aluminium soudé / Version 1.0
Plan vérifié par XXX	Echelle 1:2	Numéro du plan 15-G-002 / Feuille 1/1

University	Ecole Centrale de Lyon			**Car #**	81	**Part Cost**	$ 19.19
System	Engine and Drivetrain	**FileLink1**				**Qty**	1
Assembly	Fuel tank assembly	**FileLink2**		**FileLink1**			
Part	Filler cap	**FileLink3**		**FileLink2**		**Extended Cost**	$ 19.19
P/N Base	EN 03003			**FileLink3**			
Suffix	AA						
Details							

ItemOrder	Material	Use	UnitCost	Size1	Unit1	Size2	Unit2	Area Name	Area	Length	Density	Quantity	Sub Total
10	Aluminum - Normal (per kg)	Cap material	$ 4.20	50	mm			Round area	0.00196	0.015	2 710.00	1	$ 0.33
20	Fuel Check Valve, In-line, Aluminum Rollover		$ 15.00									1	$ 15.00
												Sub Total	**$ 15.33**

ItemOrder	Process	Use	UnitCost	Unit	Quantity	Multiplier	Mult. Val.	Sub Total
10	Machning Setup, Install and Remove		$ 1.30	unit	1	Material - Aluminium	1	$ 1.30
20	Machining		$ 0.04	cm^3	12	Material - Aluminium	1	$ 0.48
30	Threading, Internal (machining)		$ 0.10	cm	1	Material - Aluminium	1	$ 0.10
40	Drilled holes < 25.4 mm dia.	Fuel Check Valve hole	$ 0.35	hole	1			$ 0.35
50	Assemble, 1 kg, Line-on-Line	Fuel Check Valve assembling	$ 0.13	unit	1			$ 0.13
60	Wrench <= 25.4 mm	Check valve	$ 1.50	unit	1			$ 1.50
							Sub Total	**$ 3.86**

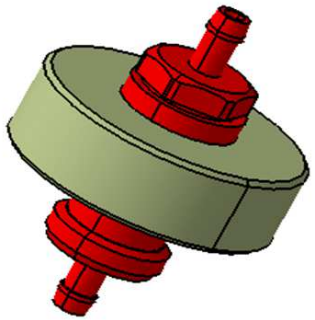

University	Ecole Centrale de Lyon			**Car #**	81	**Part Cost**	$ 2.17
System	Engine and Drivetrain	**FileLink1**				**Qty**	1
Assembly	Fuel tank assembly	**FileLink2**		**FileLink1**			
Part	Filler tube collar	**FileLink3**		**FileLink2**		**Extended Cost**	$ 2.17
P/N Base	EN 03004			**FileLink3**			
Suffix	AA						
Details							

ItemOrder	Material	Use	UnitCost	Size1	Unit1	Size2	Unit2	Area Name	Area	Length	Density	Quantity	Sub Total
10	Aluminum - Normal	Collar material	$ 4.20	15	mm	1	mm	Rectangular area (plate) 20mm x 1mm	0.00002	0.182	2 710.00	1	$ 0.03
												Sub Total	**$ 0.03**

ItemOrder	Process	Use	UnitCost	Unit	Quantity	Multiplier	Mult. Val.	Sub Total
10	Machining Setup, Install and remove	Setup for machining	$ 1.30	unit	1			$ 1.30
20	Laser cut		$ 0.01	cm	8.48	Material - Aluminum	1	$ 0.08
30	Sheet metal bends		$ 0.25	bend	3			$ 0.75
							Sub Total	**$ 2.13**

University	Ecole Centrale de Lyon		**Car #**	81	**Part Cost**	$	2.22
System	Engine and Drivetrain	**FileLink1**			**Qty**		3
Assembly	Fuel Tank assembly	**FileLink2**	**FileLink1**				
Part	Fuel Tank tab	**FileLink3**	**FileLink2**		**Extended Cos**	$	6.66
P/N Base	EN 03005		**FileLink3**				
Suffix	AA						
Details							

ItemOrder	Material	Use	UnitCost	Size1	Unit1	Size2	Unit2	Area Name	Area	Length	Density	Quantity	Sub Total
10	Steel, Mild	Fuel Tank tabs	$ 2.25	25	mm	2	mm	Rectangular area (plate) 45mm x 2mm	0.00005	0.045	7 860.00	1	$ 0.040
20	Paint	Tab painting	$ 10.00	0.002	m^2				0.00200	1.000	1.00	1	$ 0.020
												Sub Total	**$ 0.02**

ItemOrder	Process	Use	UnitCost	Unit	Quantity	Multiplier	Mult. Val.	Sub Total
10	Machining Setup, Install and remove	Setup for machining	$ 1.30	unit	1			$ 1.30
20	Laser Cut	Inside + Outside cut	$ 0.01	cm	29.6	Material, Steel	3	$ 0.89
30	Aerosol apply	Tab painting	$ 5.25	m^2	0.002			$ 0.01
							Sub Total	**$ 2.20**

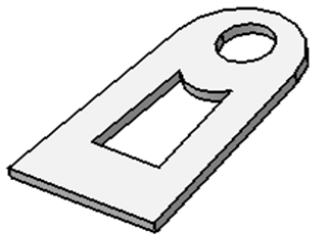

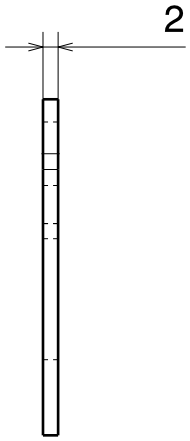

Vue de droite
Echelle : 1:1

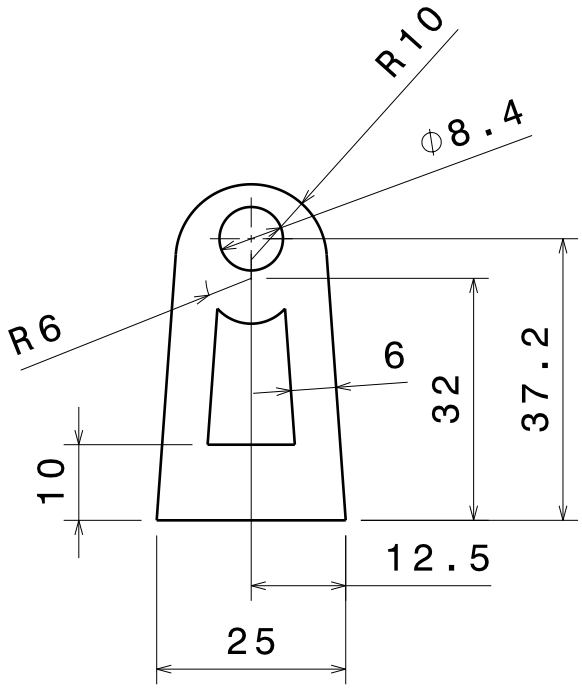

Vue de face
Echelle : 1:1

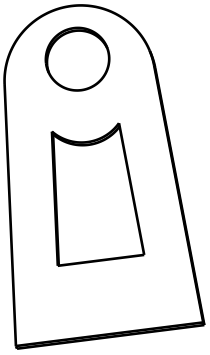

Vue isométrique
Echelle : 1:1

Tolérances générales ISO 2768 - mK

Taille A4		Ecurie Piston Sport Auto	
Dessiné par Martin ZELLER	Date 1/25/2015	Désignation Chape réservoir	
Coordonnées 06 78 52 72 06 martin.zeller@ecl13.ec-lyon.fr		Quantité 4	Matériau S 235	Version 2.0
Plan vérifié par CCN		Echelle 1:1	Numéro du plan 15-M-010	Feuille 1/1

University	Ecole Centrale de Lyon			**Car #**	81	**Part Cost**	$ 8.11
System	Engine and Drivetrain	**FileLink1**				**Qty**	1
Assembly	Fuel Tank assembly	**FileLink2**		**FileLink1**			
Part	Front mounts	**FileLink3**		**FileLink2**		**Extended Cos**	$ 8.11
P/N Base	EN 03006			**FileLink3**			
Suffix	AA						
Details	Mounts for 1 point of the Fuel Tank and the liquid recuperators						

ItemOrder	Material	Use	UnitCost	Size1	Unit1	Size2	Unit2	Area Name	Area	Length	Density	Quantity	Sub Total
10	Steel, Mild	Corner piece material	$ 2.25	30	mm	1.5	mm	Rectangular area (plate) 30mm x 1.5mm	0.00005	0.342	7 860.00	1	$ 0.27
20	Steel, Mild	Mounts material	2.25	18	mm	1.5	mm	Rectangular area (plate) 18mm x 1.5mm	0.000027	0.05	7860	1	$ 0.02
30	Paint	mounts paint	$ 10.00	0.0482	m^2				0.04824	1.000	1.00	1	$ 0.48
												Sub Total	**$ 0.48**

ItemOrder	Process	Use	UnitCost	Unit	Quantity	Multiplier	Mult. Val.	Sub Total
10	Machining Setup, Install and remove	Setup for machining	$ 1.30	unit	1			$ 1.30
20	Laser cut	Corner piece cut	$ 0.01	cm	75	Material, Steel	3	$ 2.25
30	Sheet metal bends	Corner piece bend	$ 0.25	bend	1			$ 0.25
40	Machining Setup, Install and remove	Setup for machining	$ 1.30	unit	1			$ 1.30
50	Laser cut	2 x mounts	$ 0.01	cm	16.12	Material, Steel	3	$ 0.48
60	Aerosol apply	Corner piece + mounts painting	$ 5.25	m^2	0.0482			$ 0.25
70	Assemble, 1kg, Line-on-Line	Mounts and corner piece assembly	$ 0.13	unit	1			$ 0.13
80	Ratchet <= 6.35 mm	Tighten M6 bolt	$ 0.50	unit	2			$ 1.00
90	Reaction Tool, <=6.35mm	Reaction tool for M6 nut	$ 0.25	unit	2			$ 0.50
							Sub Total	**$ 7.47**

ItemOrder	Fastener	Use	UnitCost	Size1	Unit1	Size2	Unit2	Quantity	Sub Total
10	Bolt, Grade 8.8 (SAE 5)	Corner piece to mounts bolt	$ 0.04	6	mm	20	mm	2	$ 0.08
20	Nut, Grade 8.8 (SAE 5)	Corner piece to mounts nut	$ 0.03	6	mm			2	$ 0.06
30	Washer, Grade 8.8 (SAE 5)	Corner piece to mounts bolt	$ 0.01	6	mm			2	$ 0.02
								Sub Total	**$ 0.16**

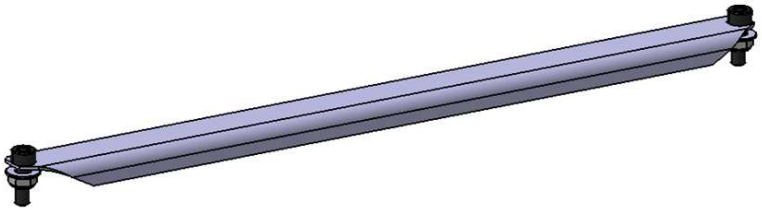

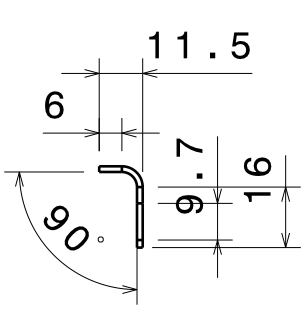

Vue de droite
Echelle : 1:2

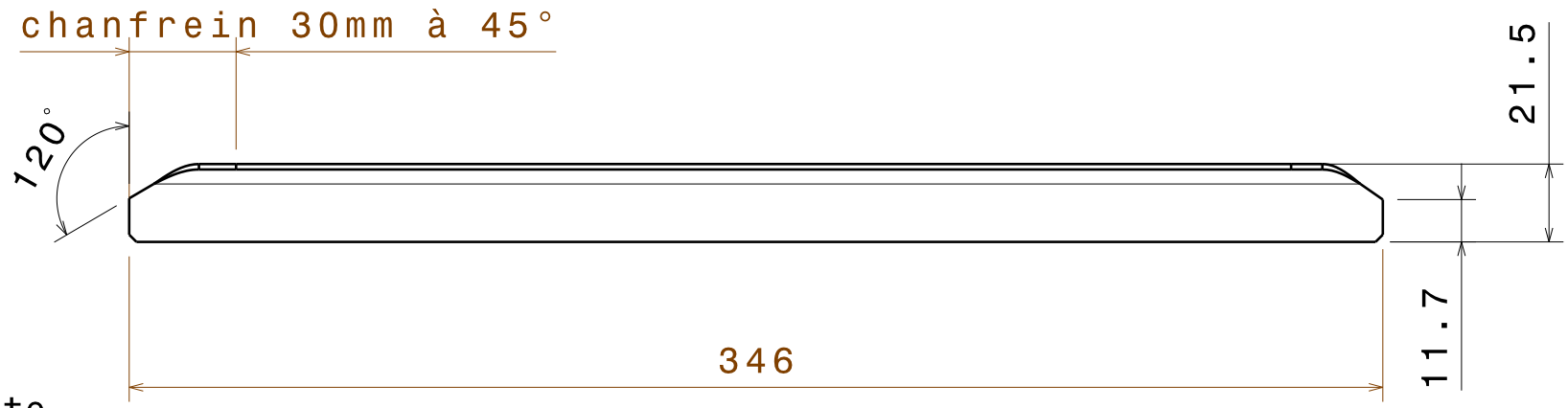

Vue de face
Echelle : 1:2

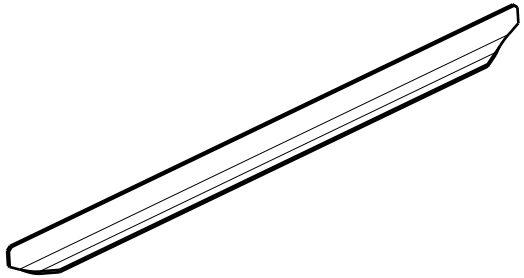

Vue isométrique
Echelle : 1:4

Chanfreins 2mm à 45°

Tolérances générales ISO 2768 - mK

Taille A4		Ecurie Piston Sport Auto
Dessiné par Martin ZELLER	Date 12/9/2014	Désignation Cornière
Coordonnées 0678527206 martin.zeller@ecl13.ec-lyon.fr		Quantité 1 / Matériau Acier S 235 / Version 1.0
Plan vérifié par PMR 90		Echelle 1:1 / Numéro du plan 15-M-013 / Feuille 1/1

University	Ecole Centrale de Lyon			**Car #**	81	**Part Cost**	$ 1.55
System	Engine and Drivetrain	**FileLink1**				**Qty**	1
Assembly	Fuel Tank Assembly	**FileLink2**		**FileLink1**			
Part	Filler tube mount	**FileLink3**		**FileLink2**		**Extended Cos**	$ 1.55
P/N Base	EN 03007			**FileLink3**			
Suffix	AA						
Details	Same mount as EN0X006 corner piece mount						

ItemOrder	Material	Use	UnitCost	Size1	Unit1	Size2	Unit2	Area Name	Area	Length	Density	Quantity	Sub Total
10	Steel, Mild	Mounts material	2.25	15	mm	2	mm	Rectangular area (plate) 15mm x 2mm	0.00003	0.02	7860	1	$ 0.01
20	Paint	mounts paint	$ 10.00	0.0006	m^2							0.0006	$ 0.01
												Sub Total	**$ 0.01**

ItemOrder	Process	Use	UnitCost	Unit	Quantity	Multiplier	Mult. Val.	Sub Total
10	Machining Setup, Install and remove	Setup for machining	$ 1.30	unit	1			$ 1.30
20	Laser cut	Mounts cut	$ 0.01	cm	8.06	Material, Steel	3	$ 0.24
30	Aerosol apply	Mount painting	$ 5.25	m^2	0.0006			$ 0.00
							Sub Total	**$ 1.54**

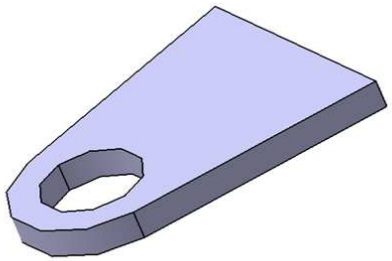

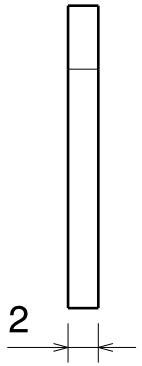

Vue de droite
Echelle : 2:1

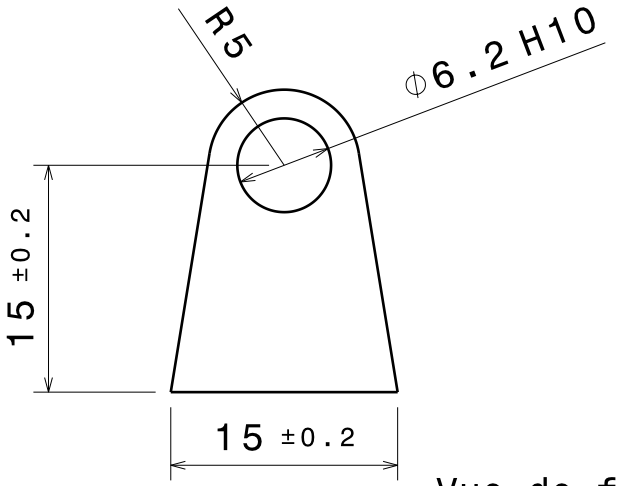

Vue de face
Echelle : 2:1

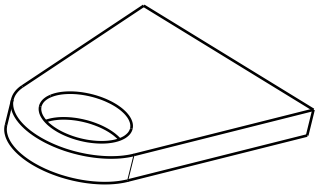

Vue isométrique
Echelle : 2:1

Tolérances générales ISO 2768 - mK

Taille A4		Ecurie Piston Sport Auto
Dessiné par Martin ZELLER	Date 11/23/2014	Désignation Chape standard motorisation
Coordonnées 06 78 52 72 06 martin.zeller@ecl13.ec-lyon.fr		Quantité 20 / Matériau S 235 / Version 1.0
Plan vérifié par CCN 92		Echelle 2:1 / Numéro du plan 15-M-011 / Feuille 1/1

University	Ecole Cenrale de Lyon	**Car #**	81	**Asm Cost**	434.94
System	Engine and Drivetrain			**Qty**	1
Assembly	Fuel sytem	**FileLink1**			
P/N Base	EN A0004	**FileLink2**		**Extended Cost**	$ 434.94
Suffix	AA	**FileLink3**			
Details	Complete fuel system, except fuel tank				

ItemOrder	Part	Part Cost	Quantity	Sub Total
10	Fuel rail	$ 12.46	1	$ 12.46
20	Fuel pump tab	$ 1.56	1	$ 1.56
30	Fuel regulator tab	$ 2.05	1	$ 2.05
40	Fuel pump collar	$ 2.59	1	$ 2.59
50	Fuel rail mount 1	$ 2.23	2	$ 4.46
60	Fuel rail mount 2	$ 2.23	1	$ 2.23
			Sub Total	**$ 25.36**

ItemOrder	Material	Use	UnitCost	Size1	Unit1	Size2	Unit2	Area Name	Area	Length	Density	Quantity	Sub Total
10	Fuel filter		$ 8.00									1.00	$ 8.00
20	Fuel Pump, Fuel Injected, Gasoline		$ 35.00									1.00	$ 35.00
30	Fuel Pressure Regulator, Gasoline		$ 15.00									1.00	$ 15.00
40	Fuel Injector, Gasoline		$ 10.00									4.00	$ 40.00
50	Hose, Low Pressure, Stainless Steel Braided Outer		$ 35.19	14.2	mm	1.5	m					1.50	$ 52.78
60	Fitting/L.P./Cap//Aluminum/Anodized	Fuel tank draining port cap	$ 7.23	14.2	mm							1.00	$ 7.23
70	Fitting/L.P./Elbow/90 deg./Aluminum/Anodized	Pump out, Rail in, Regulator out	$ 26.58	14.2	mm							3.00	$ 79.75
80	Fitting/L.P./Straight/Aluminum/Anodized	return, Filter in and out, Banjo connection	$ 12.66	14.2	mm							8.00	$ 101.31
90	Banjo Fitting, Aluminum	Fuel rail alimentation	$ 13.50	12	mm							1.00	$ 13.50
100	Fitting/L.P./Tube Nut//Steel/	Banjo fitting on rail	$ 3.27	14.2	mm							1.00	$ 3.27
110	Adapter/L.P./Union Tee//Brass/	Pump out, regulator in, filter in	$ 3.86	14.2	mm	14.2	mm					1.00	$ 3.86
120	Adapter/L.P./Union/FeMale Flare//Aluminum/Anodized	Tee out, Regulator in	$ 5.99	14.2	mm	14.2	mm					1.00	$ 5.99
130	Adapter/L.P./Union Reducer//Aluminum/Anodized	Adaptater for Pump and regulator conical threading	$ 2.64	14.2	mm	10	mm					3.00	$ 7.92
140	Seal, O-Ring, Elastomer	Injector seals	$ 0.05	unit								4.00	$ 0.20
												Sub Total	**$ 373.81**

ItemOrder	Process	Use	UnitCost	Unit	Quantity	Multiplier	Mult. Val.	Sub Total
10	Weld	Pump collar tab on frame (regulator tab only pointed)	$ 0.15	cm	2			$ 0.30
20	Assemble, 1 kg, Interference	Assemble fittings on hose	$ 0.19	unit	10			$ 1.90
30	Assemble, 1 kg, Loose	Assemble Pump on Collar	$ 0.06	unit	1			$ 0.06
40	Assemble, 1 kg, Loose	Assemble Pump + Collar on Pump tab	$ 0.06	unit	1			$ 0.06
50	Ratchet <= 6.35 mm	Tighten M6 bolt between Pump Collar and Tab	$ 0.50	unit	1			$ 0.50
60	Reaction Tool <= 6.35 mm	Reaction tool for M6 nut	$ 0.25	unit	1			$ 0.25
70	Assemble, 1 kg, Loose	Assemble Fuel pressure regulator on Tab	$ 0.06	unit	1			$ 0.06
80	Ratchet <= 6.35 mm	Tighten M6 bolt between Fuel pressure regulator and Tab	$ 0.50	unit	2			$ 1.00
90	Reaction Tool <= 6.35 mm	Reaction tool for M6 nut	$ 0.25	unit	2			$ 0.50
100	Assemble, 1 kg, Line-on-Line	Assemble Injectors seal O Ring	$ 0.13	unit	1			$ 0.13
110	Assemble, 1 kg, Line-on-Line	Assemble Injectors on Fuel rail	$ 0.13	unit	4			$ 0.52
120	Assemble, 1 kg, Line-on-Line	Assemble Rail on Admission pipe	$ 0.13	unit	1			$ 0.13

130	Safety Wire, Install	Safety wire installation between fuel rail and admission pipe	$ 0.60	unit	4			$ 2.40
140	Assemble, 1 kg, Loose	Assemble banjo on fuel rail	$ 0.06	unit	1			$ 0.06
150	Ratchet <= 25.4 mm	Tighten Tube nut	$ 0.75	unit	1			$ 0.75
160	Wrench <= 25.4 mm	Tighten fittings	$ 1.50	unit	14			$ 21.00
170	Ratchet <= 6.35 mm	Tighten M6 bolt between Fuel Rail and mounts + mounts and engine	$ 0.50	unit	6			$ 3.00
180	Reaction Tool <= 6.35 mm	Reaction tool for M6 nut	$ 0.25	unit	6			$ 1.50
							Sub Total	**$ 34.12**

ItemOrder	Fastener	Use	UnitCost	Size1	Unit1	Size2	Unit2	Quantity	Sub Total
10	Bolt, Grade 8.8 (SAE 5)	M6 bolt for Pump collar on Tab	$ 0.04	6	mm	20	mm	1	$ 0.04
20	Nut, Grade 8.8 (SAE 5)	M6 nut for collar on collar mount	$ 0.03	6	mm			1	$ 0.03
30	Washer, Grade 8.8 (SAE 5)	M6 washer for collar on collar mount	$ 0.01	6	mm			2	$ 0.02
40	Bolt, Grade 8.8 (SAE 5)	M6 bolt for Pump collar on Tab	$ 0.07	6	mm	30	mm	2	$ 0.14
50	Nut, Grade 8.8 (SAE 5)	M6 nut for collar on collar mount	$ 0.03	6	mm			2	$ 0.06
60	Washer, Grade 8.8 (SAE 5)	M6 washer for collar on collar mount	$ 0.01	6	mm			4	$ 0.04
70	Bolt, Grade 8.8 (SAE 5)	M6 bolt for Fuel rail mounts	$ 0.04	6	mm	20	mm	6	$ 0.24
80	Nut, Grade 8.8 (SAE 5)	M6 nut for Fuel rail mounts	$ 0.03	6	mm			6	$ 0.18
90	Washer, Grade 8.8 (SAE 5)	M6 washer for Fuel rail mounts	$ 0.01	6	mm			6	$ 0.06
								Sub Total	**$ 0.81**

ItemOrder	Tooling	Use	UnitCost	Unit	Quantity	PVF	FractionIncluded	Sub Total
10	Welds - Welding Fixture	Exemple de Tooling	$ 500.00	point	5	3000	1	$ 0.83
							Sub Total	**$ 0.83**

University	Ecole Centrale de Lyon			**Car #**	81	**Part Cost**	$ 12.46
System	Engine and Drivetrain	**FileLink1**				**Qty**	1
Assembly	Fuel system	**FileLink2**		**FileLink1**			
Part	Fuel rail	**FileLink3**		**FileLink2**		**Extended Cost**	$ 12.46
P/N Base	EN 04001			**FileLink3**			
Suffix	AA						
Details							

ItemOrder	Material	Use	UnitCost	Size1	Unit1	Size2	Unit2	Area Name	Area	Length	Density	Quantity	Sub Total
10	Steel, Mild	Material for part	$ 2.25	16	mm	3	mm	Round tube 16mm x 3mm	0.000122	0.3	7800	1	$ 0.64
20	Steel, Mild	Material for part	$ 2.25	100	mm	30	mm	Rectangular area 100mm x 30mm	3.00E-03	0.002	7 800	1.00	$ 0.11
												Sub Total	**$ 0.75**

ItemOrder	Process	Use	UnitCost	Unit	Quantity	Multiplier	Mult. Val.	Sub Total
10	Tube cut		$ 0.15	cm	5			$ 0.75
20	Machining Setup, Install and Remove	Setup and remove for machining	$ 1.30	unit	1			$ 1.30
30	Threading, External (machining)		$ 0.10	cm	1.5	Material- Steel	3	$ 0.45
40	Tube end preparation for welding		$ 0.75	end	4			$ 3.00
50	Weld - Round Tubing		$ 0.38	cm	0.64			$ 0.24
60	Machining Setup, Install and Remove	Setup and remove for laser cut	$ 1.30	unit	1			$ 1.30
70	Laser cut		$ 0.01	cm	18	Material- Steel	3	$ 0.54
80	Weld	Weld pieces together	$ 0.15	cm	12			$ 1.80
							Sub Total	**$ 9.38**

ItemOrder	Tooling	Use	UnitCost	Unit	Quantity	PVF	FracIncld	Sub Total
10	Welds - Welding Fixture	Exemple de Tooling	$ 500.00	point	14	3000	1	$ 2.33
							Sub Total	**$ 2.33**

University	Ecole Centrale de Lyon			**Car #**	81	**Part Cost**	$ 1.56
System	Engine and Drivetrain	**FileLink1**				**Qty**	1
Assembly	Fuel system	**FileLink2**		**FileLink1**			
Part	Fuel pump tab	**FileLink3**		**FileLink2**		**Extended Cost**	$ 1.56
P/N Base	EN 04002			**FileLink3**			
Suffix	AA						
Details	Standard tab for engine system (same as Filler tube, Battery, …)						

ItemOrder	Material	Use	UnitCost	Size1	Unit1	Size2	Unit2	Area Name	Area	Length	Density	Quantity	Sub Total
10	Steel, Mild	Mounts material	2.25	15	mm	2	mm	Rectangular area (plate) 15mm x 2mm	0.00003	0.02	7860	1	$ 0.01
20	Paint	mounts paint	$ 10.00	0.0006	m^2							0.0006	$ 0.01
												Sub Total	**$ 0.02**

ItemOrder	Process	Use	UnitCost	Unit	Quantity	Multiplier	Mult. Val.	Sub Total
10	Machining Setup, Install and remove	Setup for machining	$ 1.30	unit	1			$ 1.30
20	Laser cut	Mounts cut	$ 0.01	cm	8.06	Material, Steel	3	$ 0.24
30	Aerosol apply	Mount painting	$ 5.25	m^2	0.0006			$ 0.00
							Sub Total	**$ 1.54**

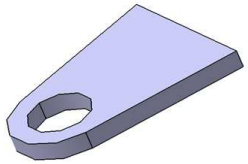

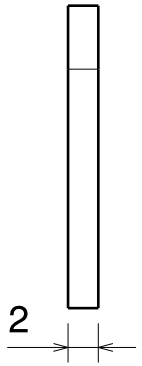

Vue de droite
Echelle : 2:1

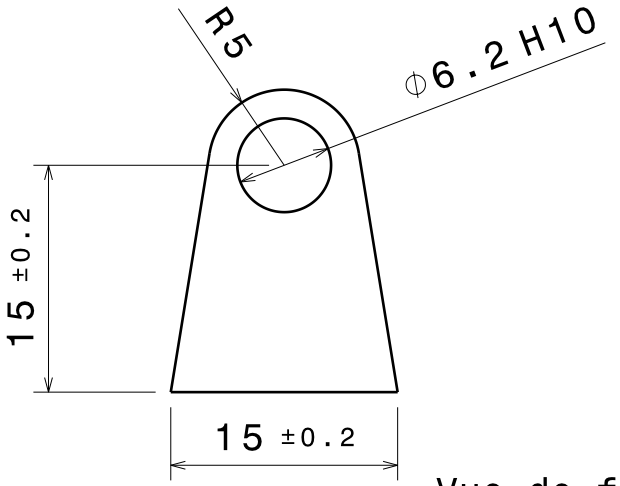

Vue de face
Echelle : 2:1

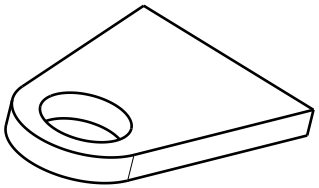

Vue isométrique
Echelle : 2:1

Tolérances générales ISO 2768 - mK

Taille A4		Ecurie Piston Sport Auto
Dessiné par Martin ZELLER	Date 11/23/2014	Désignation Chape standard motorisation
Coordonnées 06 78 52 72 06 martin.zeller@ecl13.ec-lyon.fr		Quantité 20 / Matériau S 235 / Version 1.0
Plan vérifié par CCN 97		Echelle 2:1 / Numéro du plan 15-M-011 / Feuille 1/1

University	Ecole Centrale de Lyon			**Car #**	81	**Part Cost**	$ 2.05
System	Engine and Drivetrain	**FileLink1**				**Qty**	1
Assembly	Fuel system	**FileLink2**		**FileLink1**			
Part	Fuel regulator tab	**FileLink3**		**FileLink2**		**Extended Cost**	$ 2.05
P/N Base	EN 04003			**FileLink3**			
Suffix	AA						
Details							

ItemOrder	Material	Use	UnitCost	Size1	Unit1	Size2	Unit2	Area Name	Area	Length	Density	Quantity	Sub Total
10	Steel - Mild	Tab material	$ 2.25	20	mm	2	mm	Rectangular area (plate) 20mm x 2 mm	0.00004	0.04	7 860.00	1	$ 0.03
30	Paint	mounts paint	$ 10.00	0.0016	m^2				0.00160	1.000	1.00	1	$ 0.02
												Sub Total	**$ 0.04**

ItemOrder	Process	Use	UnitCost	Unit	Quantity	Multiplier	Mult. Val.	Sub Total
10	Machining Setup, Install and remove	Setup for machining	$ 1.30	unit	1			$ 1.30
20	Laser cut	Mounts cut	$ 0.01	cm	23.4	Material, Steel	3	$ 0.70
30	Aerosol apply	Mount painting	$ 5.25	m^2	0.0016			$ 0.01
							Sub Total	**$ 2.01**

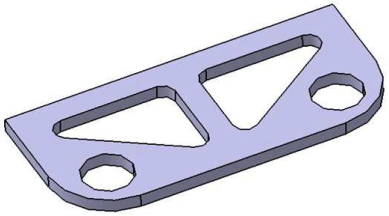

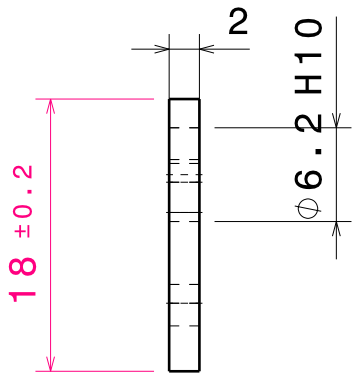

Vue de droite
Echelle : 2:1

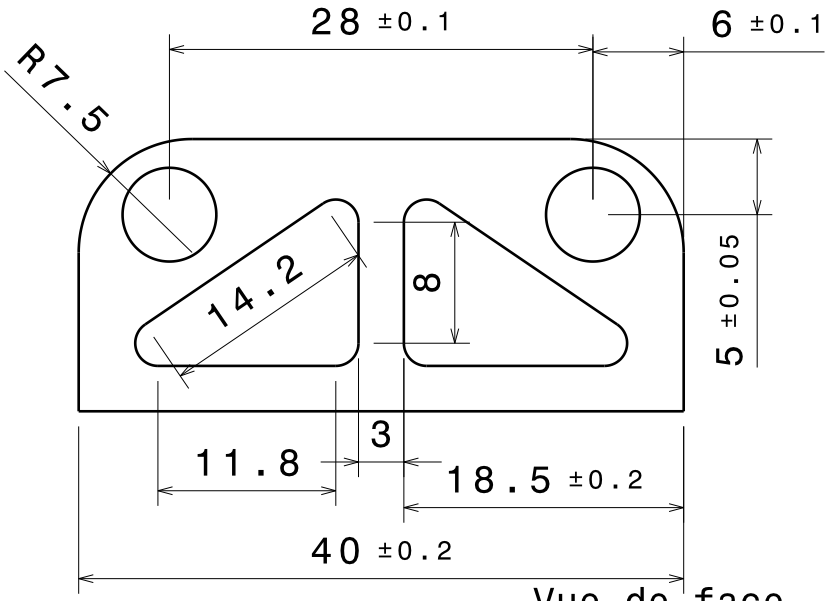

Vue de face
Echelle : 2:1

Rayon de congé évidements: 1mm<R<2mm

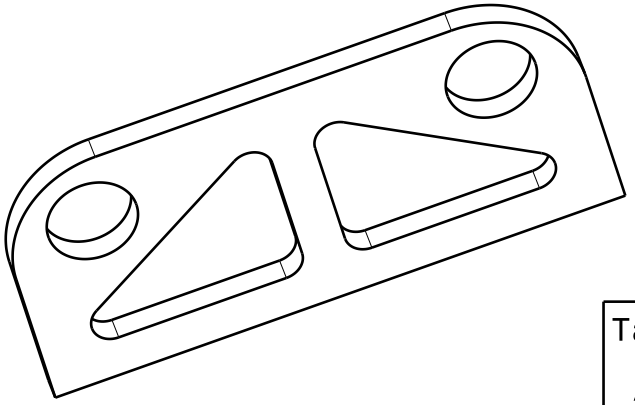

Vue isométrique
Echelle : 2:1

Tolérances générales ISO 27-68 - mK

Taille A4		Ecurie Piston Sport Auto
Dessiné par Martin ZELLER	Date 11/26/2014	Désignation Chape régulateur de pression
Coordonnées 06 78 52 72 06 martin.zeller@ecl13.ec-lyon.fr		Quantité 2 / Matériau S 235 / Version 1.0
Plan vérifié par PMR 99		Echelle 2:1 / Numéro du plan 15-M-012 / Feuille 1/1

University	Ecole Centrale de Lyon			**Car #**	81	**Part Cost**	$ 2.59
System	Engine and Drivetrain	**FileLink1**				**Qty**	1
Assembly	Fuel system	**FileLink2**		**FileLink1**			
Part	Fuel pump collar	**FileLink3**		**FileLink2**		**Extended Cost**	$ 2.59
P/N Base	EN 04004			**FileLink3**			
Suffix	AA						
Details							

ItemOrder	Material	Use	UnitCost	Size1	Unit1	Size2	Unit2	Area Name	Area	Length	Density	Quantity	Sub Total
10	Aluminum - Normal	Collar material	$ 4.20	20	mm	1	mm	Rectangular area (plate) 20mm x 1mm	0.00002	0.230	2 710.00	1	$ 0.04
												Sub Total	**$ 0.04**

ItemOrder	Process	Use	UnitCost	Unit	Quantity	Multiplier	Mult. Val.	Sub Total
10	Machining Setup, Install and remove	Setup for laser cut	$ 1.30	unit	1			$ 1.30
20	Laser cut		$ 0.01	cm	50	Material - Aluminum	1	$ 0.50
30	Sheet metal bends	Rolling at 60mm + 2 fixation zones	$ 0.25	bend	3			$ 0.75
							Sub Total	**$ 2.55**

University	Ecole Centrale de Lyon			**Car #**	81	**Part Cost**	$ 2.23
System	Engine and Drivetrain	**FileLink1**				**Qty**	2
Assembly	Fuel system	**FileLink2**		**FileLink1**			
Part	Fuel rail mount 1	**FileLink3**		**FileLink2**		**Extended Cos**	$ 4.46
P/N Base	EN 04005			**FileLink3**			
Suffix	AA						
Details							

ItemOrder	Material	Use	UnitCost	Size1	Unit1	Size2	Unit2	Area Name	Area	Length	Density	Quantity	Sub Total
10	Aluminum - Normal	Mount material	$ 4.20	30	mm	2	mm	Rectangular area (plate) 30mm x 2mm	0.00006	0.170	2 710.00	1	$ 0.12
												Sub Total	**$ 0.12**

ItemOrder	Process	Use	UnitCost	Unit	Quantity	Multiplier	Mult. Val.	Sub Total
10	Machining Setup, Install and remove	Setup for laser cut	$ 1.30	unit	1			$ 1.30
20	Laser cut		$ 0.01	cm	31.5	Material - Aluminum	1	$ 0.32
30	Sheet metal bends	Rolling at 60mm + 2 fixation zones	$ 0.25	bend	2			$ 0.50
							Sub Total	**$ 2.12**

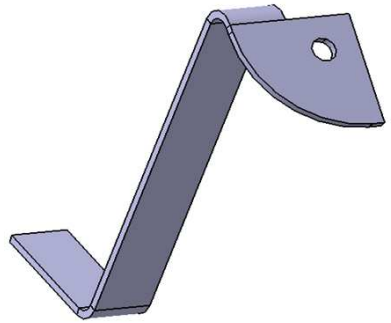

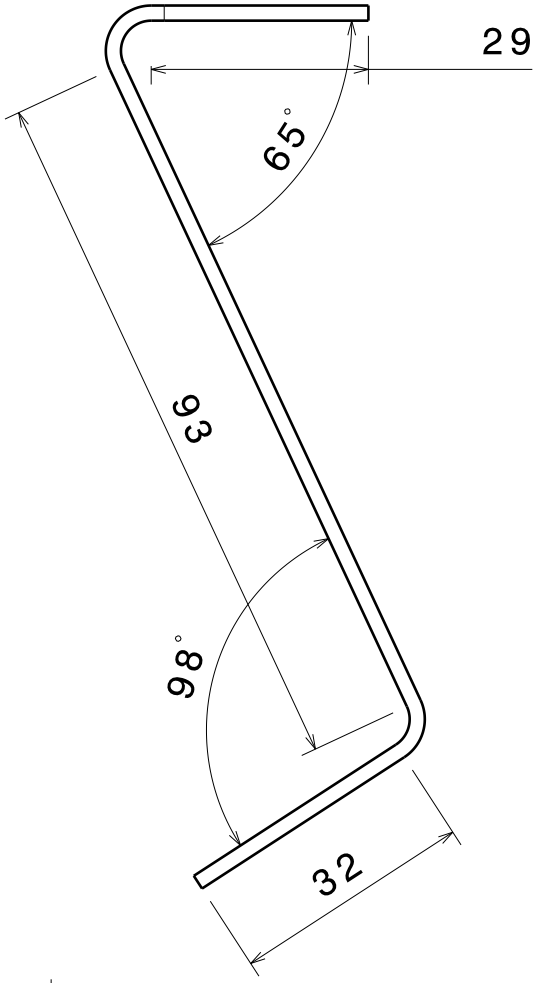

Vue de face
Echelle : 1:1

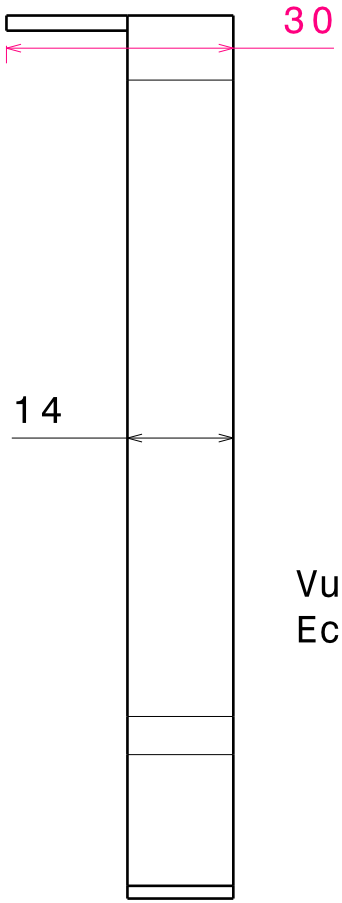

Vue de gauche
Echelle : 1:1

Tolérances générales ISO 2768-mK

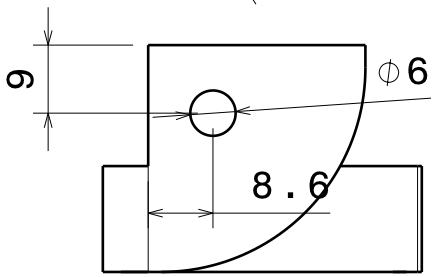

Vue de dessus
Echelle : 1:1

Taille A4		Ecurie Piston Sport Auto
Dessiné par Clément CASTELLAN	Date 24/03/2015	Désignation Attache rampe inj 1
Coordonnées 06 34 33 50 85 clement.castellan@ecl13.ec-lyon.fr		Quantité 1 / Matériau Aluminium 2mm / Version 1.0
Plan vérifié par FRT 102		Echelle 1:1 / Numéro du plan 15-M-022-1 / Feuille 1/1

University	Ecole Centrale de Lyon			**Car #**	81	**Part Cost**	$ 2.23
System	Engine and Drivetrain	**FileLink1**				**Qty**	1
Assembly	Fuel system	**FileLink2**		**FileLink1**			
Part	Fuel rail mount 2	**FileLink3**		**FileLink2**		**Extended Cos**	$ 2.23
P/N Base	EN 04005			**FileLink3**			
Suffix	AA						
Details	Symetrie of Fuel rail mount 1						

ItemOrder	Material	Use	UnitCost	Size1	Unit1	Size2	Unit2	Area Name	Area	Length	Density	Quantity	Sub Total
10	Aluminum - N	Mount materi	$ 4.20	30	mm	2	mm	Rectangular area (plate) 30mm x 2mm	0.00006	0.170	2 710.00	1	$ 0.12
												Sub Total	**$ 0.12**

ItemOrder	Process	Use	UnitCost	Unit	Quantity	Multiplier	Mult. Val.	Sub Total
10	Machining Setup, Install and remove	Setup for laser cut	$ 1.30	unit	1			$ 1.30
20	Laser cut		$ 0.01	cm	31.5	Material - Aluminum	1	$ 0.32
30	Sheet metal bends	Rolling at 60mm + 2 fixation zones	$ 0.25	bend	2			$ 0.50
							Sub Total	**$ 2.12**

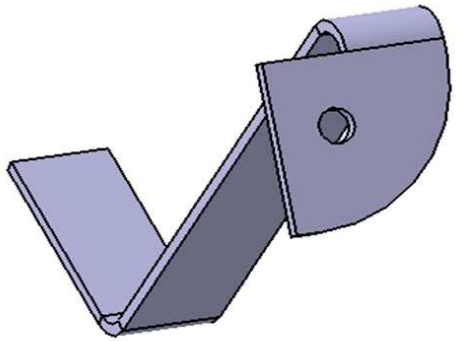

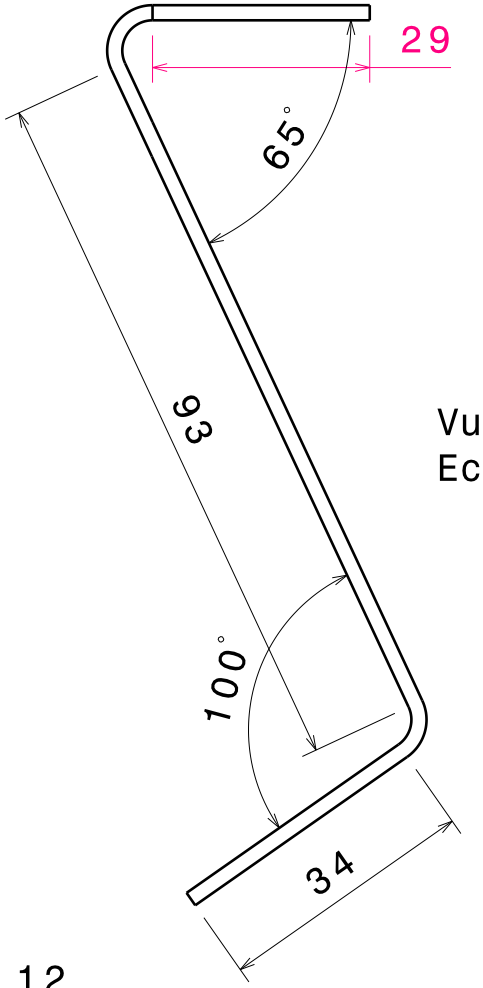

Vue de face
Echelle : 1:1

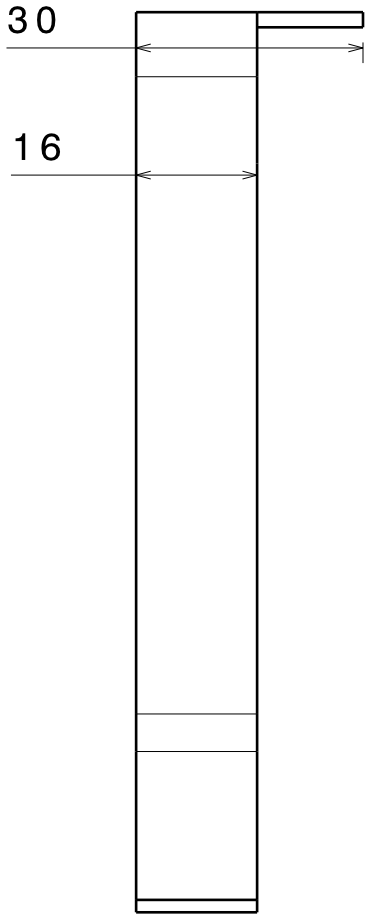

Vue de gauche
Echelle : 1:1

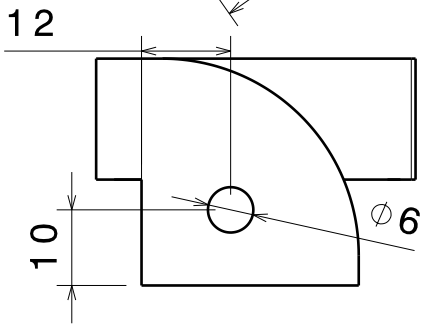

Vue de dessus
Echelle : 1:1

Taille A4		Ecurie Piston Sport Auto
Dessiné par Clément CASTELLAN	Date 25/03/2015	Désignation Attache rampe inj 3
Coordonnées 06 34 33 50 85 clement.castellan@ecl13.ec-lyon.fr		Quantité 1 / Matériau Aluminium 2mm / Version 1.0
Plan vérifié par FRT 104		Echelle 1:1 / Numéro du plan 15-M-022-3 / Feuille 1/1

University	Ecole Cenrale de Lyon	**Car #**	81	**Asm Cost**	83.77
System	Engine and Drivetrain			**Qty**	1
Assembly	Air intake system	**FileLink1**			
P/N Base	EN A0005	**FileLink2**		**Extended Cost**	$ 83.77
Suffix	AA	**FileLink3**			
Details					

ItemOrder	Part	Part Cost	Quantity	Sub Total
10	Plenum	$ 11.75	1	$ 11.75
20	Plenum plate	$ 3.30	1	$ 3.30
30	Inlet pipes	$ 10.10	1	$ 10.10
40	Pipe end	$ 1.98	4	$ 7.91
50	Plenum mounts	$ 2.25	2	$ 4.49
			Sub Total	**$ 37.55**

ItemOrder	Material	Use	UnitCost	Size1	Unit1	Size2	Unit2	Area Name	Area	Length	Density	Quantity	Sub Total
10	Hose, Rubber	Rubber brushing	$ 9.00	50	mm							0.16	$ 1.44
												Sub Total	**$ 1.44**

ItemOrder	Process	Use	UnitCost	Unit	Quantity	Multiplier	Mult. Val.	Sub Total
10	Assemble, 1kg, Interference	Assemble rubber brushing to engine	$ 0.19	unit	4			$ 0.76
20	Assemble, 1kg, Loose	Put clamp on brushing	$ 0.06	unit	8			$ 0.48
30	Assemble, 1kg, Interference	Assemble pipe ends to rubber brushing	$ 0.19	unit	4			$ 0.76
40	Screwdriver > 1Turn	Tighten clamp	$ 0.50	unit	8			$ 4.00
50	Assemble, 1kg, Loose	Assemble inlet pipes to pipe ends	$ 0.06	unit	4			$ 0.24
60	Ratchet <=6,35mm	Tighten M6 bolts for pipes and ends	$ 0.50	unit	8			$ 4.00
70	Reaction tool <=6,35mm	Reaction tool for M6 nut	$ 0.25	unit	8			$ 2.00
80	Assemble, 1kg, loose	Assemble pipes and plenum plate	$ 0.06	unit	4			$ 0.24
90	Ratchet <=6,35mm	Tighten M6 bolts for pipes and plate	$ 0.50	unit	8			$ 4.00
100	Raction tool <=6,35mm	Raction tool for M6 nut	$ 0.25	unit	8			$ 2.00
110	Assemble, 1kg, Loose	Assemble plenum and plenum plate	$ 0.50	unit	1			$ 0.50
120	Ratchet <=6,35mm	Tighten M4 bolts for plenum and plate	$ 0.50	unit	12			$ 6.00
130	Reaction tool <=6,35mm	Raction tool for M4 nut	$ 0.25	unit	12			$ 3.00
							Sub Total	**$ 27.98**

ItemOrder	Fastener	Use	UnitCost	Size1	Unit1	Size2	Unit2	Quantity	Sub Total
10	Bolt,Grade 8.8 (SAE)	Bolt for pipes	$ 0.63	6	mm	25	mm	16	$ 10.08
20	Bolt,Grade 8.8 (SAE)	Bolts for plenum	$ 0.02	4	mm			12	$ 0.24
30	Nut, Grade 8.8 (SAE 5)	Nut for pipes	$ 0.03	6	mm			16	$ 0.48
40	Nut, Grade 8.8 (SAE 5)	Nut for plenum	$ 0.02	4	mm			12	$ 0.24
50	Hose clamp, Miniature bolt	Assemble rubber on engine and pipes	$ 0.72	55	mm			8	$ 5.76
								Sub Total	**$ 16.80**

University	Ecole Centrale de Lyon			**Car #**	81	**Part Cost**	$ 11.75
System	Engine and Drivetrain	**FileLink1**				**Qty**	1
Assembly	Air intake system	**FileLink2**		**FileLink1**			
Part	Plenum	**FileLink3**		**FileLink2**		**Extended Cost**	$ 11.75
P/N Base	EN 05001			**FileLink3**			
Suffix	AA						
Details							

ItemOrder	Material	Use	UnitCost	Size1	Unit1	Size2	Unit2	Area Name	Area	Length	Density	Quantity	Sub Total
10	Plastic, ABS (per kg)	Stock material for part	$ 3.30	0.333	kg							1.10	$ 1.10
												Sub Total	**$ 1.10**

ItemOrder	Process	Use	UnitCost	Unit	Quantity	Multiplier	Mult. Val.	Sub Total
10	Rapid Prototype - Plastic		$ 32.00	kg	0.333			$ 10.66
							Sub Total	**$ 10.66**

University	Ecole Centrale de Lyon			**Car #**	81	**Part Cost**	$ 3.30
System	Engine and Drivetrain	**FileLink1**				**Qty**	1
Assembly	Air intake system	**FileLink2**		**FileLink1**			
Part	Plenum plate	**FileLink3**		**FileLink2**		**Extended Cost**	$ 3.30
P/N Base	EN 05002			**FileLink3**			
Suffix	AA						
Details							

ItemOrder	Material	Use	UnitCost	Size1	Unit1	Size2	Unit2	Area Name	Area	Length	Density	Quantity	Sub Total
10	Aluminum, Normal (per kg)	Stock material for part	$ 1.20	240	mm	210	mm	Rectangular	5.04E-02	0.003	2710	1	$ 0.49
												Sub Total	**$ 0.49**

ItemOrder	Process	Use	UnitCost	Unit	Quantity	Multiplier	Mult. Val.	Sub Total
10	Machining Setup, Install and remove	Setup for laser cutting	$ 1.30	unit	1	1	1	$ 1.30
20	Laser Cut	Cutout shape	$ 0.01	cm	151.3	Material - Aluminum	1	$ 1.51
							Sub Total	**$ 2.81**

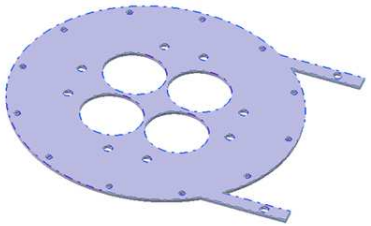

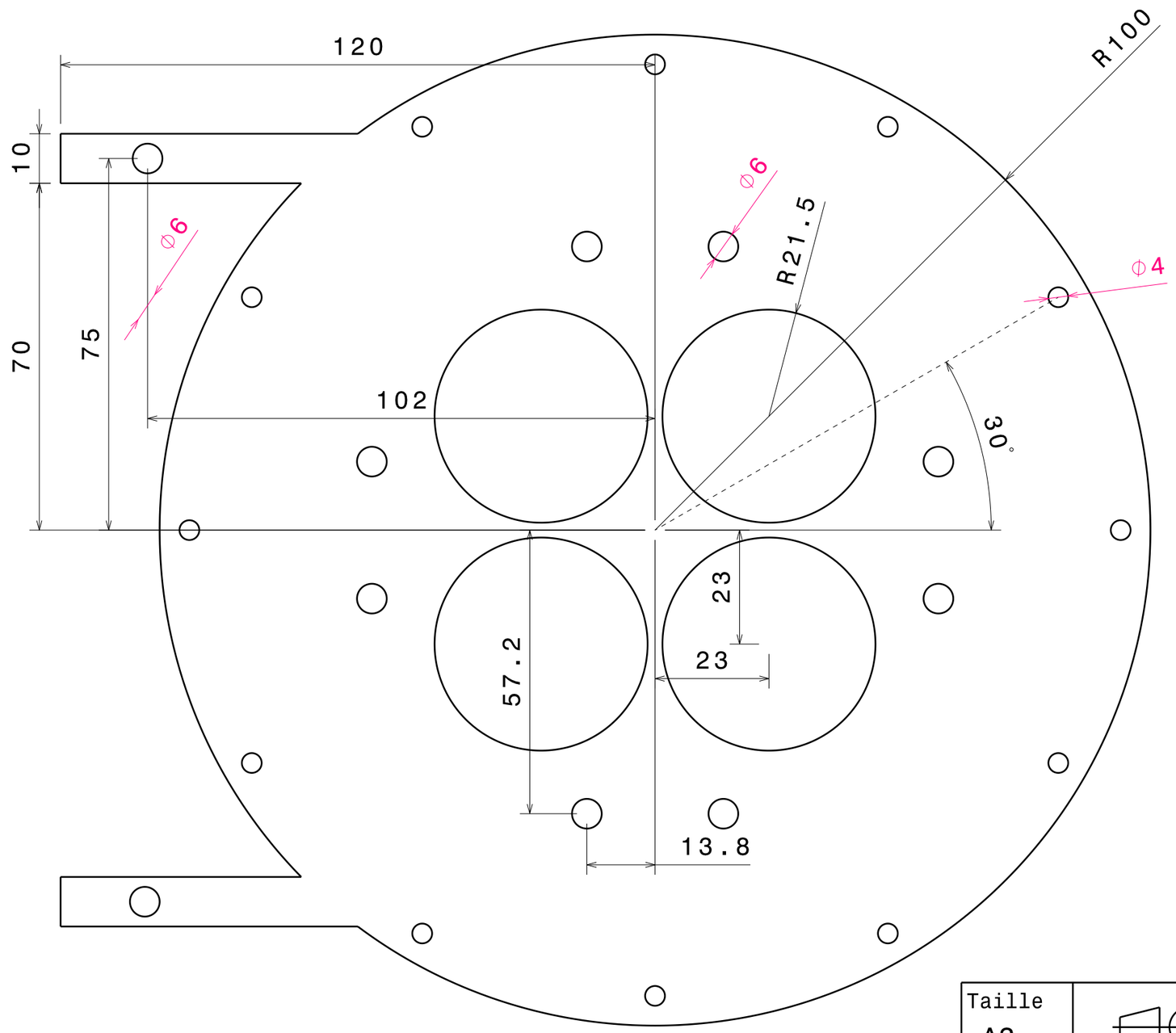

Pièce multi symétrique :
- 12 trous Diamètre 4
- Alésages symétriques horizontalement et verticalement

Vue de face
Echelle : 1:1

Taille A3		Ecurie Piston Sport Auto
Dessiné par Clément CASTELLAN	Date 10/12/2014	Désignation Socle BAA
Coordonnées clement.castellan@ecl13.ec-lyon.fr 06.34.33.50.85		Quantité 1 / Matériau 2.5mm Alu au choix / Version 2.0
Plan vérifié par MZR		Echelle 1:1 / Numéro du plan 15-M-035 / Feuille 1/1

University	Ecole Centrale de Lyon			**Car #**	81	**Part Cost**	$ 10.10
System	Engine and Drivetrain	**FileLink1**				**Qty**	1
Assembly	Nom de l'assemblage	**FileLink2**		**FileLink1**			
Part	Inlet pipes	**FileLink3**		**FileLink2**		**Extended Cost**	$ 10.10
P/N Base	EN 05003			**FileLink3**			
Suffix	AA						
Details							

ItemOrder	Material	Use	UnitCost	Size1	Unit1	Size2	Unit2	Area Name	Area	Length	Density	Quantity	Sub Total
10	Plastic, ABS (per kg)	Stock material for part	$ 3.30	0.286	kg							1	$ 0.94
												Sub Total	**$ 0.94**

ItemOrder	Process	Use	UnitCost	Unit	Quantity	Multiplier	Mult. Val.	Sub Total
10	Rapid Prototype - Plastic		$ 32.00	kg	0.286		1	$ 9.15
							Sub Total	**$ 9.15**

University	Ecole Centrale de Lyon			**Car #**	81	**Part Cost**	$ 1.98
System	Engine and Drivetrain	**FileLink1**				**Qty**	4
Assembly	Air intake system	**FileLink2**		**FileLink1**			
Part	Pipe end	**FileLink3**		**FileLink2**		**Extended Cost**	$ 7.91
P/N Base	EN 05004			**FileLink3**			
Suffix	AA						
Details							

ItemOrder	Material	Use	UnitCost	Size1	Unit1	Size2	Unit2	Area Name	Area	Length	Density	Quantity	Sub Total
10	Plastic, ABS (per kg)	Stock material for part	$ 3.30	0.056	kg							1	$ 0.18
												Sub Total	**$ 0.18**

ItemOrder	Process	Use	UnitCost	Unit	Quantity	Multiplier	Mult. Val.	Sub Total
10	Rapid Prototype - Plastic		$ 32.00	kg	0.056		1	$ 1.79
							Sub Total	**$ 1.79**

University	Ecole Centrale de Lyon			**Car #**	81	**Part Cost**	$ 2.25
System	Engine and Drivetrain	**FileLink1**				**Qty**	2
Assembly	Air intake system	**FileLink2**		**FileLink1**			
Part	Plenum mounts	**FileLink3**		**FileLink2**		**Extended Cost**	$ 4.49
P/N Base	EN 05005			**FileLink3**			
Suffix	AA						
Details							

ItemOrder	Material	Use	UnitCost	Size1	Unit1	Size2	Unit2	Area Name	Area	Length	Density	Quantity	Sub Total
10	Aluminum, Normal (per kg)	Stock material for part	$ 1.20	205	mm	11.5	mm	Rectangular	2.36E-03	0.002	2710	1	$ 0.02
												Sub Total	**$ 0.02**

ItemOrder	Process	Use	UnitCost	Unit	Quantity	Multiplier	Mult. Val.	Sub Total
10	Machining Setup, Install and remove	Setup for laser cutting	$ 1.30	unit	1			$ 1.30
20	Laser Cut	Cutout shape	$ 0.01	cm	43	Material-Alu	1	$ 0.43
30	Sheet metal bends		$ 0.25	bend	2			$ 0.50
							Sub Total	**$ 2.23**

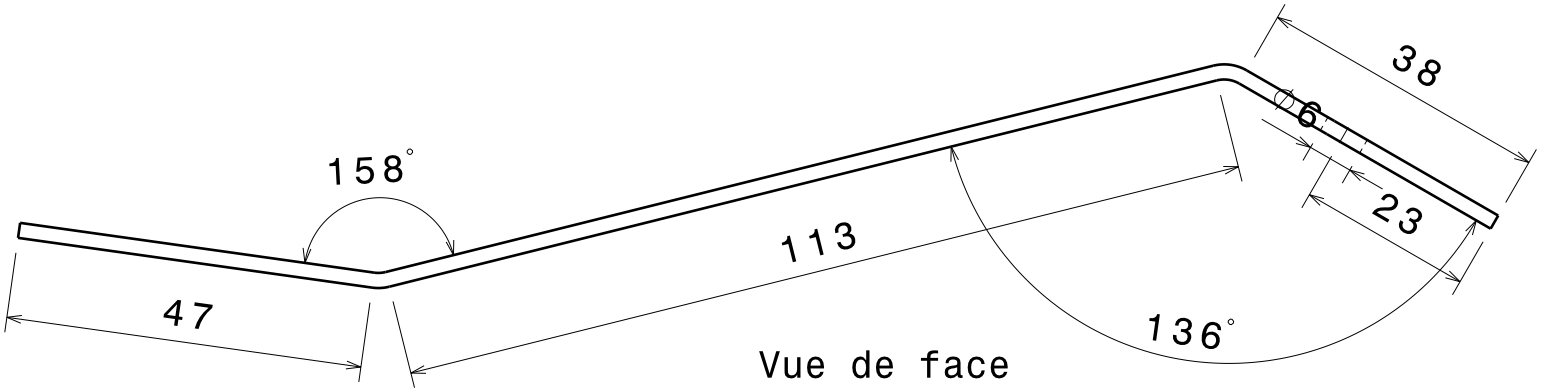

Vue de face
Echelle : 1:1

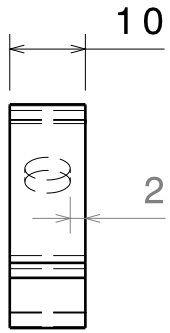

Vue de gauche
Echelle : 1:1

Tolérances générales ISO 2768 mK

Taille A4		Ecurie Piston Sport Auto
Dessiné par Clément CASTELLAN	Date 25/03/2015	Désignation Attache socle BAA
Coordonnées 06 34 33 50 85 clement.castellan@ecl13.ec-lyon.fr		Quantité 2 / Matériau Aluminium 2mm / Version 1.0
Plan vérifié par FRT 112		Echelle 1:1 / Numéro du plan 15-M-023 / Feuille 1/1

University	Ecole Cenrale de Lyon	**Car #**	81	**Asm Cost**	181.23
System	Engine and Drivetrain			**Qty**	1
Assembly	Throttle body	**FileLink1**			
P/N Base	EN A0006	**FileLink2**		**Extended Cost**	$ 181.23
Suffix	AA	**FileLink3**			
Details					

ItemOrder	Part	Part Cost	Quantity	Sub Total
10	Throttle flange	$ 5.18	1	$ 5.18
20	Restrictor	$ 5.73	1	$ 5.73
30	Throttle housing	$ 4.28	1	$ 4.28
40	Throttle axle	$ 2.73	1	$ 2.73
50	TPS axle	$ 2.71	1	$ 2.71
60	Throttle plate	$ 1.49	1	$ 1.49
70	Cable housing	$ 4.57	1	$ 4.57
80	Axle stop	$ 2.04	1	$ 2.04
90	Ram pipe	$ 12.50	1	$ 12.50
100	Tab	$ 1.94	2	$ 3.88
110	Throttle body bracket	$ 2.92	1	$ 2.92
120	Throttle body upper collar	$ 0.51	1	$ 0.51
130	Throttle body bottom collar	$ 1.91	1	$ 1.91
			Sub Total	**$ 50.44**

ItemOrder	Material	Use	UnitCost	Size1	Unit1	Size2	Unit2	Area Name	Area	Length	Density	Quantity	Sub Total
10	Air filter	Optional Text	$ 0.15	420	cm^2							1.00	$ 63.00
20	Spring, Tension (General)	Stock material for some part	$ 1.00									1.00	$ 1.00
30	Spring, Tension (General)		$ 1.00									1.00	$ 1.00
40	Seal, O-ring, Elastomer	Sealing with airfilter	$ 0.05									1.00	$ 0.05
50	Seal, O-ring, Elastomer	sealing with plenum	$ 0.05									1.00	$ 0.05
60	Cable, Pull	Throttle cable	$ 15.00	3.5	m							3.50	$ 52.50
70	Cable Adjuster		$ 1.00									1.00	$ 1.00
												Sub Total	**$ 118.60**

ItemOrder	Process	Use	UnitCost	Unit	Quantity	Multiplier	Mult. Val.	Sub Total
10	Weld	Tab on Frame	$ 0.15	cm	4			$ 0.60
20	Assemble, 1 kg, Interference	Assemble throttle housing on restrictor	$ 0.19	unit	1			$ 0.19
30	Assemble, 1 kg, Interference	Assemble flange on restrictor	$ 0.19	unit	1			$ 0.19
40	Assemble, 1 kg, Interference	Assemble ram pipe on throttle housing	$ 0.19	unit	1			$ 0.19
50	Assemble, 1 kg, Interference	Assemble throttle plate in restrictor	$ 0.13	unit	1			$ 0.13
60	Assemble, 1 kg, Interference	Assemble TPS axle	$ 0.13	unit	1			$ 0.13
70	Assemble, 1 kg, Interference	Assemble cable housing axle	$ 0.13	unit	1			$ 0.13
80	Assemble, 1 kg, Interference	Assemble negative stop	$ 0.13	unit	1			$ 0.13
90	Ratchet <= 6,35mm	Tighten M5 bolt	$ 0.50	unit	1			$ 0.50
100	Reaction tool <=6,35mm	Reaction tool for M5 nut	$ 0.25	unit	1			$ 0.25
110	Assemble, 1kg, Line-on-line	Assemble torsion spring	$ 0.13	unit	1			$ 0.13
120	Assemble 1 kg, loose	Assemble axle stop	$ 0.13	unit	1			$ 0.13
130	Ratchet <= 6,35mm	Tighten M5 bolt	$ 0.50	unit	1			$ 0.50
140	Assemble, 1 kg, Loose	Assemble seal on throttle body	$ 0.06	unit	2			$ 0.12
150	Assemble, 1 kg, Loose	Assemble throttle body on plenum	$ 0.06	unit	1			$ 0.06
160	Ratchet <= 6,35mm	Tighten M6 bolt	$ 0.50	unit	2			$ 1.00
170	Reaction tool <=6,35mm	Reaction tool for M6 nut	$ 0.25	unit	2			$ 0.50
180	Assemble, 1kg, Loose	Assemble collar	$ 0.06	unit	1			$ 0.06
190	Ratchet <= 6,35mm	Tighten M5 bolt	$ 0.50	unit	2			$ 1.00
200	Assemble, 1kg, Loose	Assemble throttle bracket to collar	$ 0.06	unit	1			$ 0.06
210	Ratchet <= 6,35mm	Tighten M6 bolt	$ 0.50	unit	1			$ 0.50

220	Assemble, 1kg, Loose	Assemble bracket on the frame	$ 0.06	unit	1			$ 0.06
230	Ratchet <= 6,35mm	Tighten M6 bolt	$ 0.50	unit	2			$ 1.00
240	Reaction tool <=6,35mm	Reaction tool for M6 nut	$ 0.25	unit	2			$ 0.50
250	Assemble, 1kg, Loose	Assemble air filter and clamp	$ 0.06	unit	1			$ 0.06
260	Screwdriver >1 Turn	Tighten clamp	$ 0.50	unit	1			$ 0.50
270	Assemble, 1kg, Loose	Assemble cable adjuster	$ 0.06	unit	1			$ 0.06
280	Hand, Loose <=6,35mm	Tighten throttle adjuster	$ 0.25	unit	1			$ 0.25
290	Assemble 1 kg, loose	Assemble cable	$ 0.06	unit	1			$ 0.06
300	Safety Wire, Install	Between bolts	$ 0.60	unit	1			$ 0.60
							Sub Total	**$ 9.59**

ItemOrder	Fastener	Use	UnitCost	Size1	Unit1	Size2	Unit2	Quantity	Sub Total
10	Bolt,Grade 8.8 (SAE)	Assemble axle stop	$ 0.03	5	mm	15	mm	1	$ 0.03
20	Bolt,Grade 8.8 (SAE)	Throttle negative stop	$ 0.03	5	mm	20	mm	1	$ 0.03
30	Bolt,Grade 8.8 (SAE)	Assemble collar	$ 0.02	5	mm	10	mm	2	$ 0.04
40	Bolt,Grade 8.8 (SAE)	Assemble bracket to collar	$ 0.03	6	mm	10	mm	1	$ 0.03
50	Bolt,Grade 8.8 (SAE)	Assemble throttle bracket on frame	$ 0.04	6	mm	15	mm	2	$ 0.08
60	Nut,Grade 8.8 (SAE)	Assemble throttle bracket on frame	$ 0.03	6	mm			2	$ 0.06
70	Washer,Grade 8.8 (SAE)	Assemble throttle bracket on frame	$ 0.01	6	mm			4	$ 0.04
80	Bolt,Grade 8.8 (SAE)	Assemble throttle body on plenum	$ 0.04	6	mm	20	mm	2	$ 0.08
90	Nut,Grade 8.8 (SAE)	Assemble throttle body on plenum	$ 0.03	6	mm			2	$ 0.06
100	Washer,Grade 8.8 (SAE)	Assemble throttle body on plenum	$ 0.01	6	mm			2	$ 0.02
110	Hose Clamp, Miniature Bolt	Assemble air filter	$ 0.80	75	mm			1	$ 0.80
								Sub Total	**$ 1.27**

ItemOrder	Tooling	Use	UnitCost	Unit	Quantity	PVF	FractionIncluded	Sub Total
10	Welds - Welding Fixture	Exemple de Tooling	$ 500.00	point	8	3000	1	$ 1.33
							Sub Total	**$ 1.33**

University	Ecole Centrale de Lyon			**Car #**	81	**Part Cost**	$ 5.18
System	Engine and Drivetrain	**FileLink1**				**Qty**	1
Assembly	Throttle body	**FileLink2**		**FileLink1**			
Part	Throttle flange	**FileLink3**		**FileLink2**		**Extended Cost**	$ 5.18
P/N Base	EN 06001			**FileLink3**			
Suffix	AA						
Details							

ItemOrder	Material	Use	UnitCost	Size1	Unit1	Size2	Unit2	Area Name	Area	Length	Density	Quantity	Sub Total
10	Aluminium, Normal	Stock material for part	$ 4.20	80	mm	40	mm	Rectangular 40*20mm	3.20E-03	0.020	2 710	1.00	$ 0.73
												Sub Total	**$ 0.73**

ItemOrder	Process	Use	UnitCost	Unit	Quantity	Multiplier	Mult. Val.	Sub Total
10	Machining Setup, Install and remove		$ 1.30	unit	1			$ 1.30
20	Drillet holes <25,4mm dia.		$ 0.35	hole	5			$ 1.75
30	Machining		$ 0.04	cm^3	35	Aluminium	1	$ 1.40
							Sub Total	**$ 4.45**

University	Ecole Centrale de Lyon			**Car #**	81	**Part Cost**	$ 5.73
System	Engine and Drivetrain	**FileLink1**				**Qty**	1
Assembly	Throttle body	**FileLink2**		**FileLink1**			
Part	Restrictor	**FileLink3**		**FileLink2**		**Extended Cost**	$ 5.73
P/N Base	EN 06002			**FileLink3**			
Suffix	AA						
Details							

ItemOrder	Material	Use	UnitCost	Size1	Unit1	Size2	Unit2	Area Name	Area	Length	Density	Quantity	Sub Total
10	Aluminium, Normal		$ 4.20	42	mm			Round 42mm	1.38E-03	0.100	2710	1	$ 1.58
													$ -
												Sub Total	**$ 1.58**

ItemOrder	Process	Use	UnitCost	Unit	Quantity	Multiplier	Mult. Val.	Sub Total
10	Machining Setup, Install and remove		$ 1.30	unit	1			$ 1.30
20	Machining	Cutout shape	$ 0.04	cm^3	35	Material - Aluminium	1	$ 1.40
30	Machining setp, change		$ 0.65	unit	1			$ 0.65
40	Machining		$ 0.04	cm^3	20	Material - Aluminium	1	$ 0.80
							Sub Total	**$ 4.15**

University	Ecole Centrale de Lyon			**Car #**	81	**Part Cost**	$ 4.28
System	Engine and Drivetrain	**FileLink1**				**Qty**	1
Assembly	Throttle body	**FileLink2**		**FileLink1**			
Part	Throttle housing	**FileLink3**		**FileLink2**		**Extended Cost**	$ 4.28
P/N Base	EN 06003			**FileLink3**			
Suffix	AA						
Details							

ItemOrder	Material	Use	UnitCost	Size1	Unit1	Size2	Unit2	Area Name	Area	Length	Density	Quantity	Sub Total
10	Aluminium, Normal		$ 4.20	55	mm	45	mm	Rectangular 45*30mm	2.E-03	0.03	2 710.00	1	$ 0.85
												Sub Total	**$ 0.85**

ItemOrder	Process	Use	UnitCost	Unit	Quantity	Multiplier	Mult. Val.	Sub Total
10	Machining setup, install and remove		$ 1.30	unit	1			$ 1.30
20	Machining		$ 0.04	cm^3	28	Material - Aluminium	1	$ 1.12
30	Machining Setup, Change		$ 0.65	unit	1			$ 0.65
40	Machining		$ 0.04	cm^3	9	Material - Aluminium		$ 0.36
							Sub Total	**$ 3.43**

University	Ecole Centrale de Lyon			**Car #**	81	**Part Cost**	$ 2.73
System	Engine and Drivetrain	**FileLink1**				**Qty**	1
Assembly	Throttle body	**FileLink2**		**FileLink1**			
Part	Throttle axle	**FileLink3**		**FileLink2**		**Extended Cost**	$ 2.73
P/N Base	EN 06004			**FileLink3**			
Suffix	AA						
Details							

ItemOrder	Material	Use	UnitCost	Size1	Unit1	Size2	Unit2	Area Name	Area	Length	Density	Quantity	Sub Total
10	Steel, Mild	Axle material	$ 2.25	10	mm			Round 10mm	7.85E-05	0.040	7 860.00	1	$ 0.06
												Sub Total	**$ 0.06**

ItemOrder	Process	Use	UnitCost	Unit	Quantity	Multiplier	Mult. Val.	Sub Total
10	Machining Setup, Install and remove		$ 1.30	unit	1			$ 1.30
20	Machining		$ 0.04	cm^3	4	Material, Steel	3	$ 0.48
30	Machining Setup, Change	Setup part for machining of the back face	$ 0.65	unit	1			$ 0.65
40	Machining	Machining of the back face	$ 0.04	cm^3	2	Material, Steel	3	$ 0.24
							Sub Total	**$ 2.67**

University	Ecole Centrale de Lyon			**Car #**	81	**Part Cost**	$ 2.71
System	Engine and Drivetrain	**FileLink1**				**Qty**	1
Assembly	Throttle body	**FileLink2**		**FileLink1**			
Part	TPS axle	**FileLink3**		**FileLink2**		**Extended Cost**	$ 2.71
P/N Base	EN 06005			**FileLink3**			
Suffix	AA						
Details							

ItemOrder	Material	Use	UnitCost	Size1	Unit1	Size2	Unit2	Area Name	Area	Length	Density	Quantity	Sub Total
10	Steel, Mild	Axle material	$ 2.25	10	mm			Round 10mm	7.85E-05	0.030	7 860.00	1	$ 0.04
												Sub Total	**$ 0.04**

ItemOrder	Process	Use	UnitCost	Unit	Quantity	Multiplier	Mult. Val.	Sub Total
10	Machining Setup, Install and remove		$ 1.30	unit	1			$ 1.30
20	Machining		$ 0.04	cm^3	4	Material, Steel	3	$ 0.48
30	Machining Setup, Change	Setup part for machining of the back face	$ 0.65	unit	1			$ 0.65
40	Machining	Machining of the back face	$ 0.04	cm^3	2	Material, Steel	3	$ 0.24
							Sub Total	**$ 2.67**

University	Ecole Centrale de Lyon			**Car #**	81	**Part Cost**	$ 1.49
System	Engine and Drivetrain	**FileLink1**				**Qty**	1
Assembly	Throttle body	**FileLink2**		**FileLink1**			
Part	Throttle plate	**FileLink3**		**FileLink2**		**Extended Cost**	$ 1.49
P/N Base	EN 06006			**FileLink3**			
Suffix	AA						
Details							

ItemOrder	Material	Use	UnitCost	Size1	Unit1	Size2	Unit2	Area Name	Area	Length	Density	Quantity	Sub Total
10	Steel, Mild		$ 2.25	32	mm			Round 32mm	8.04E-04	0.005	7 860.00	1	$ 0.07
												Sub Total	**$ 0.07**

ItemOrder	Process	Use	UnitCost	Unit	Quantity	Multiplier	Mult. Val.	Sub Total
10	Machining Setup, Install and remove		$ 1.30	unit	1			$ 1.30
20	Machining		$ 0.04	cm^3	1	Material, Steel	3	$ 0.12
							Sub Total	**$ 1.42**

University	Ecole Centrale de Lyon			**Car #**	81	**Part Cost**	$ 4.57
System	Engine and Drivetrain	**FileLink1**				**Qty**	1
Assembly	Throttle body	**FileLink2**		**FileLink1**			
Part	Cable housing	**FileLink3**		**FileLink2**		**Extended Cost**	$ 4.57
P/N Base	EN 06007			**FileLink3**			
Suffix	AA						
Details							

ItemOrder	Material	Use	UnitCost	Size1	Unit1	Size2	Unit2	Area Name	Area	Length	Density	Quantity	Sub Total
10	Steel, Mild		$ 2.25	80	mm	60	mm	Rectangular 80*60mm	4.80E-03	0.002	7 860.00	1	$ 0.17
												Sub Total	**$ 0.17**

ItemOrder	Process	Use	UnitCost	Unit	Quantity	Multiplier	Mult. Val.	Sub Total
10	Machining Setup, Install and remove		$ 1.30	unit	1			$ 1.30
20	Laser cut		$ 0.01	cm	35	Material, Steel	3	$ 1.05
30	Sheet metal bends		$ 0.25	bend	3			$ 0.75
40	Weld		$ 0.15	cm	2			$ 0.30
							Sub Total	**$ 3.40**

ItemOrder	Tooling	Use	UnitCost	Unit	Quantity	PVF	FractionInclu	Sub Total
10	Welds - Welding Fixture		$ 500.00	point	6	3000	1	$ 1.00
							Sub Total	**$ 1.00**

University	Ecole Centrale de Lyon			**Car #**	81	**Part Cost**	$ 2.04
System	Engine and Drivetrain	**FileLink1**				**Qty**	1
Assembly	Throttle body	**FileLink2**		**FileLink1**			
Part	Axle stop	**FileLink3**		**FileLink2**		**Extended Cost**	$ 2.04
P/N Base	EN 06008			**FileLink3**			
Suffix	AA						
Details							

ItemOrder	Material	Use	UnitCost	Size1	Unit1	Size2	Unit2	Area Name	Area	Length	Density	Quantity	Sub Total
10	Steel, Mild		$ 2.25	25	mm			Round 25mm	4.91E-04	0.030	7 860.00	1	$ 0.26
												0	**Sub Total** **$ 0.26**

ItemOrder	Process	Use	UnitCost	Unit	Quantity	Multiplier	Mult. Val.	Sub Total
10	Machining Setup, Install and remove		$ 1.30	unit	1			$ 1.30
20	Machining		$ 0.04	cm^3	4	Material, Steel	3	$ 0.48
							Sub Total	**$ 1.78**

University	Ecole Centrale de Lyon			**Car #**	81	**Part Cost**	$ 12.50
System	Engine and Drivetrain	**FileLink1**				**Qty**	1
Assembly	Throttle body	**FileLink2**		**FileLink1**			
Part	Ram pipe	**FileLink3**		**FileLink2**		**Extended Cost**	$ 12.50
P/N Base	EN 06009			**FileLink3**			
Suffix	AA						
Details							

ItemOrder	Material	Use	UnitCost	Size1	Unit1	Size2	Unit2	Area Name	Area	Length	Density	Quantity	Sub Total
10	Aluminium, Normal		$ 4.20	80	mm			Round 80mm	5.03E-03	0.070	2 710.00	1	$ 4.00
											0	**Sub Total**	**$ 4.00**

ItemOrder	Process	Use	UnitCost	Unit	Quantity	Multiplier	Mult. Val.	Sub Total
10	Machining Setup, Install and remove		$ 1.30	unit	1			$ 1.30
20	Machining		$ 0.04	cm^3	180	Material - Aluminium	1	$ 7.20
							Sub Total	**$ 8.50**

University	Ecole Centrale de Lyon			**Car #**	81	**Part Cost**	$ 1.94
System	Engine and Drivetrain	**FileLink1**				**Qty**	1
Assembly	Throttle body	**FileLink2**		**FileLink1**			
Part	Tab	**FileLink3**		**FileLink2**		**Extended Cost**	$ 1.94
P/N Base	EN 06010			**FileLink3**			
Suffix	AA						
Details							

ItemOrder	Material	Use	UnitCost	Size1	Unit1	Size2	Unit2	Area Name	Area	Length	Density	Quantity	Sub Total
10	Steel, Mild	Tab material	$ 2.25	17	mm	65	mm	Rectangular 17*65mm	1.11E-03	0.003	7 860.00	1	$ 0.06
											0	**Sub Total**	**$ 0.06**

ItemOrder	Process	Use	UnitCost	Unit	Quantity	Multiplier	Mult. Val.	Sub Total
10	Machining Setup, Install and remove		$ 1.30	unit	1			$ 1.30
20	Laser cut		$ 0.01	cm	11	Material - Steel	3	$ 0.33
30	Sheet metal bends		$ 0.25	bend	1			$ 0.25
							Sub Total	**$ 1.88**

University	Ecole Centrale de Lyon			**Car #**	81	**Part Cost**	$ 2.92
System	Engine and Drivetrain	**FileLink1**				**Qty**	1
Assembly	Throttle body	**FileLink2**		**FileLink1**			
Part	Throttle body bracket	**FileLink3**		**FileLink2**		**Extended Cost**	$ 2.92
P/N Base	EN 06011			**FileLink3**			
Suffix	AA						
Details							

ItemOrder	Material	Use	UnitCost	Size1	Unit1	Size2	Unit2	Area Name	Area	Length	Density	Quantity	Sub Total
10	Aluminium, Normal		$ 4.20	400	mm	20	mm	Rectangular 400*20mm	8.00E-03	0.003	2 710.00	1	$ 0.27
												0	**Sub Total** **$ 0.27**

ItemOrder	Process	Use	UnitCost	Unit	Quantity	Multiplier	Mult. Val.	Sub Total
10	Machining Setup, Install and remove		$ 1.30	unit	1			$ 1.30
20	Laser cut		$ 0.01	cm	85	Material -Aluminium	1	$ 0.85
30	Sheet metal bends		$ 0.25	bend	2			$ 0.50
							Sub Total	**$ 2.65**

University	Ecole Centrale de Lyon			**Car #**	81	**Part Cost**	$ 0.51
System	Engine and Drivetrain	**FileLink1**				**Qty**	1
Assembly	Throttle body	**FileLink2**		**FileLink1**			
Part	Throttle body upper collar	**FileLink3**		**FileLink2**		**Extended Cost**	$ 0.51
P/N Base	EN 06012			**FileLink3**			
Suffix	AA						
Details							

ItemOrder	Material	Use	UnitCost	Size1	Unit1	Size2	Unit2	Area Name	Area	Length	Density	Quantity	Sub Total
10	Aluminium, Normal		$ 4.20	80	mm	20	mm	Rectangular 80*20mm	1.60E-03	0.002	2 710.00	1	$ 0.03
												0	**Sub Total** **$ 0.03**

ItemOrder	Process	Use	UnitCost	Unit	Quantity	Multiplier	Mult. Val.	Sub Total
10	Sheet metal stamping		$ 0.03	cm^2	16			$ 0.48
							Sub Total	**$ 0.48**

University	Ecole Centrale de Lyon			**Car #**	81	**Part Cost**	$ 1.91
System	Engine and Drivetrain	**FileLink1**				**Qty**	1
Assembly	Throttle body	**FileLink2**		**FileLink1**			
Part	Throttle body bottom collar	**FileLink3**		**FileLink2**		**Extended Cost**	$ 1.91
P/N Base	EN 06013			**FileLink3**			
Suffix	AA						
Details							

ItemOrder	Material	Use	UnitCost	Size1	Unit1	Size2	Unit2	Area Name	Area	Length	Density	Quantity	Sub Total
10	Aluminium, Normal		$ 4.20	80	mm	20	mm	Rectangular 80*20mm	1.60E-03	0.002	2 710.00	1	$ 0.03
												0	**Sub Total** **$ 0.03**

ItemOrder	Process	Use	UnitCost	Unit	Quantity	Multiplier	Mult. Val.	Sub Total
10	Sheet metal stamping		$ 0.03	cm^2	16			$ 0.48
20	Machining setup, Install and remove		$ 1.30	unit	1			$ 1.30
30	Threading, Internal (machining)		$ 0.10	cm	1	Material - Aluminium	1	$ 0.10
							Sub Total	**$ 1.88**

University	Ecole Cenrale de Lyon	**Car #**	81	**Asm Cost**	35.90
System	Engine and Drivetrain			**Qty**	1
Assembly	Overflow bottles	**FileLink1**			
P/N Base	EN A0007	**FileLink2**		**Extended Cost**	$ 35.90
Suffix	AA	**FileLink3**			
Details					

ItemOrder	Part	Part Cost	Quantity	Sub Total
10	Overflow bottles tab	$ 1.56	1	$ 1.56
20	Bottles bottom mount	$ 2.78	2	$ 5.56
30	Bottles upper mount	$ 2.28	2	$ 4.57
			Sub Total	**$ 11.69**

ItemOrder	Material	Use	UnitCost	Size1	Unit1	Size2	Unit2	Area Name	Area	Length	Density	Quantity	Sub Total
10	Overflow Bottle, Steel Oil Can	Bendix, Brake fluid bottles	$ 1.00									2.00	$ 2.00
20	Hose, Silicone	Lines from Engine's top and Expansion tank to overflow bottles	$ 6.58	14	mm							2.00	$ 13.16
												Sub Total	**$ 15.16**

ItemOrder	Process	Use	UnitCost	Unit	Quantity	Multiplier	Mult. Val.	Sub Total
10	Weld	Tab on frame	$ 0.15	cm	1.5			$ 0.23
20	Assemble, 1kg, Loose	Upper and Bottom mounts	$ 0.06	unit	2			$ 0.12
30	Riveting	Upper and Bottom mounts riveting	$ 0.25	unit	4			$ 1.00
40	Drilled holes < 25.4 mm dia.	Bottles drilling for hoses	$ 0.35	hole	2			$ 0.70
50	Assemble, 3kg, Loose	Bottles + mounts on tabs	$ 0.19	unit	1			$ 0.19
60	Ratchet <= 6.35 mm	Tighten M6 bolt for mount on tab	$ 0.50	unit	4			$ 2.00
70	Reaction Tool <= 6.35 mm	Reaction tool for M6 nut	$ 0.25	unit	4			$ 1.00
80	Cut (scissors, knife)	Hoses cut	$ 0.06	unit	2			$ 0.12
90	Screwdriver > 1 Turn	Clamps installation	$ 0.50	unit	2			$ 1.00
100	Assemble, 1kg, Interference	Hose mounting on Bottles, Engine and Expansion tank	$ 0.19	unit	4			$ 0.76
							Sub Total	**$ 7.12**

ItemOrder	Fastener	Use	UnitCost	Size1	Unit1	Size2	Unit2	Quantity	Sub Total
10	Rivet, Pop	Upper and Bottom mounts assemble	$ 0.03					4	$ 0.12
20	Bolt, Grade 8.8 (SAE 5)	M6 bolt for collar on collar mount	$ 0.04	6	mm	20	mm	4	$ 0.16
30	Nut, Grade 8.8 (SAE 5)	M6 nut for collar on collar mount	$ 0.03	6	mm			4	$ 0.12
40	Washer, Grade 8.8 (SAE 5)	M6 washer for collar on collar mount	$ 0.01	6	mm			8	$ 0.08
50	Hose Clamp, Worm Drive	Engine and Expansion tank clamp	$ 0.56	14	mm			2	$ 1.12
								Sub Total	**$ 1.60**

ItemOrder	Tooling	Use	UnitCost	Unit	Quantity	PVF	FractionIncluded	Sub Total
10	Welds - Welding Fixture		$ 500.00	point	2	3000	1	$ 0.33
							Sub Total	**$ 0.33**

University	Ecole Centrale de Lyon			**Car #**	81	**Part Cost**	$ 1.56
System	Engine and Drivetrain	**FileLink1**				**Qty**	1
Assembly	Overflow bottles	**FileLink2**		**FileLink1**			
Part	Overflow bottles tab	**FileLink3**		**FileLink2**		**Extended Cost**	$ 1.56
P/N Base	EN 07001			**FileLink3**			
Suffix	AA						
Details	Same tab as filler tube tab, corner piece tab, … Only 1 tab because reuse Fuel Tank tab and Corner piece						

ItemOrder	Material	Use	UnitCost	Size1	Unit1	Size2	Unit2	Area Name	Area	Length	Density	Quantity	Sub Total
10	Steel, Mild	Mounts material	2.25	15	mm	2	mm	Rectangular area (plate) 15mm x 2mm	0.00003	0.02	7860	1	$ 0.01
20	Paint	mounts paint	$ 10.00	0.0006	m^2							0.0006	$ 0.01
												Sub Total	**$ 0.02**

ItemOrder	Process	Use	UnitCost	Unit	Quantity	Multiplier	Mult. Val.	Sub Total
10	Machining Setup, Install and remove	Setup for machining	$ 1.30	unit	1			$ 1.30
20	Laser cut	Mounts cut	$ 0.01	cm	8.06	Material, Steel	3	$ 0.24
30	Aerosol apply	Mount painting	$ 5.25	m^2	0.0006			$ 0.00
							Sub Total	**$ 1.54**

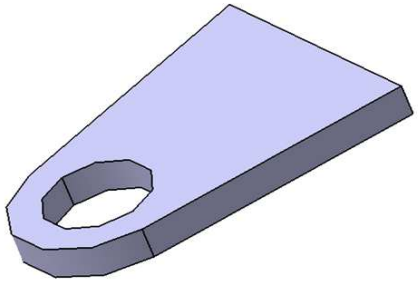

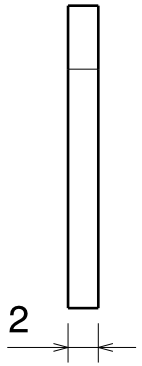

Vue de droite
Echelle : 2:1

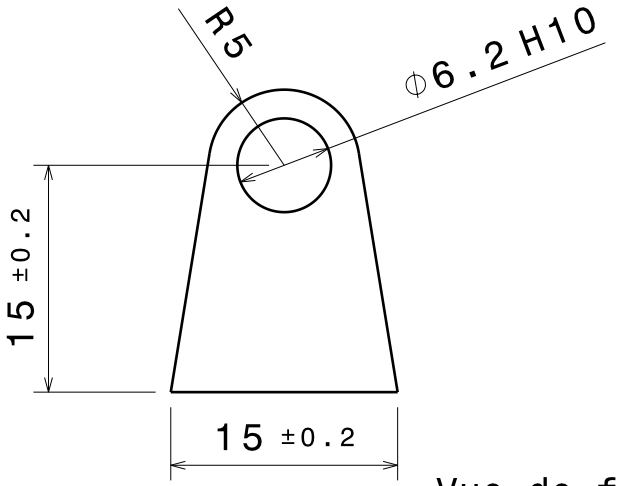

Vue de face
Echelle : 2:1

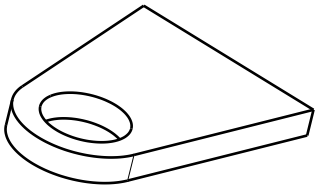

Vue isométrique
Echelle : 2:1

Tolérances générales ISO 2768 - mK

Taille A4		Ecurie Piston Sport Auto
Dessiné par Martin ZELLER	Date 11/23/2014	Désignation Chape standard motorisation
Coordonnées 06 78 52 72 06 martin.zeller@ecl13.ec-lyon.fr		Quantité 20 / Matériau S 235 / Version 1.0
Plan vérifié par CCN 130		Echelle 2:1 / Numéro du plan 15-M-011 / Feuille 1/1

University	Ecole Centrale de Lyon			**Car #**	81	**Part Cost**	$ 2.78
System	Engine and Drivetrain	**FileLink1**				**Qty**	2
Assembly	Overflow bottles	**FileLink2**		**FileLink1**			
Part	Bottles bottom mount	**FileLink3**		**FileLink2**		**Extended Cost**	$ 5.56
P/N Base	EN 07002			**FileLink3**			
Suffix	AA						
Details							

ItemOrder	Material	Use	UnitCost	Size1	Unit1	Size2	Unit2	Area Name	Area	Length	Density	Quantity	Sub Total
10	Aluminum - Normal (per kg)	Plate material for bottom mount	$ 4.20	30	mm	1	mm	Rectangular area (30mm x 1mm)	3.00E-05	0.300	2710	1	$ 0.10
												Sub Total	**$ 0.10**

ItemOrder	Process	Use	UnitCost	Unit	Quantity	Multiplier	Mult. Val.	Sub Total
10	Machining Setup, Install and remove	Setup for laser cutting	$ 1.30	unit	1			$ 1.30
20	Laser Cut		$ 0.01	cm	88	Material - Aluminum	1	$ 0.88
30	Sheet metal bends	Rolling at bottle shape	$ 0.25	bend	2			$ 0.50
							Sub Total	**$ 2.68**

University	Ecole Centrale de Lyon			**Car #**	81	**Part Cost**	$ 2.28
System	Engine and Drivetrain	**FileLink1**				**Qty**	2
Assembly	Overflow bottles	**FileLink2**		**FileLink1**			
Part	Bottles upper mount	**FileLink3**		**FileLink2**		**Extended Cost**	$ 4.57
P/N Base	EN 07003			**FileLink3**			
Suffix	AA						
Details							

ItemOrder	Material	Use	UnitCost	Size1	Unit1	Size2	Unit2	Area Name	Area	Length	Density	Quantity	Sub Total
10	Aluminum - Normal (per kg)	Plate material for bottom mount	$ 4.20	15	mm	1	mm	Rectangular area (30mm x 1mm)	1.50E-05	0.200	2710	1	$ 0.03
												Sub Total	**$ 0.03**

ItemOrder	Process	Use	UnitCost	Unit	Quantity	Multiplier	Mult. Val.	Sub Total
10	Machining Setup, Install and remove	Setup for laser cutting	$ 1.30	unit	1			$ 1.30
20	Laser Cut		$ 0.01	cm	45	Material - Aluminum	1	$ 0.45
30	Sheet metal bends	Rolling at bottle shape	$ 0.25	bend	2			$ 0.50
							Sub Total	**$ 2.25**

University	Ecole Centrale lyon	**Car #**	81	**Asm Cost**	$ 159.29
System	Engine and Drivetrain			**Qty**	1
Assembly	Cooling System	**FileLink1**			
P/N Base	EN A0008	**FileLink2**		**Extended Cost**	$ 159.29
Suffix	AA	**FileLink3**			
Details	Engine cooling system				

ItemOrder	Part	Part Cost	Quantity	Sub Total
10	Coolant lines	$ 32.42	1	$ 32.420
20	Radiator	$ 11.84	1	$ 11.844
30	Fan	$ 30.77	1	$ 30.770
40	Expansion tank	$ 23.09	1	$ 23.088
50	Radiator upper tab	$ 1.76	1	$ 1.764
60	Radiator lower tab	$ 1.71	1	$ 1.711
70	Radiator lateral tab	$ 1.76	2	$ 3.522
80	Lateral bar	$ 8.11	1	$ 8.111
			Sub Total	**$ 113.230**

ItemOrder	Material	Use	UnitCost	Size1	Unit1	Size2	Unit2	Area Name	Area	Length	Density	Quantity	Sub Total
10	Fluid, coolant	cooling water		2	L							1	$ -
20	Mount, vibration dumping sandwich	Radiator mounts	$ 6.75	25	mm							4	$ 27.00
												Sub Total	**$ 27.000**

ItemOrder	Process	Use	UnitCost	Unit	Quantity	Multiplier	Mult. Val.	Sub Total
10	Weld	Weld upper tab to frame	$ 0.15	cm	6		1	$ 0.90
20	Weld	Weld lower tab to frame	$ 0.15	cm	7.8		1	$ 1.17
30	Weld	Weld lateral tabs to frame	$ 0.15	cm	18.8		1	$ 2.82
40	Assemble, 1 kg, Loose	Assemble vibration-damping sandwich with tabs	$ 0.06	labor	4		1	$ 0.24
50	Assemble, 3 kg, Line-on-line	Set radiator to vibration-damping sandwiches	$ 0.38	labor	1		1	$ 0.38
60	Assemble, 1 kg, Line-on-Line	Assemble lateral bar with lateral tab and radiator	$ 0.13	labor	3		1	$ 0.39
70	Assemble, 1 kg, Loose	Nut for vibration damping sandwiches	$ 0.06	labor	8		1	$ 0.48
80	Ratchet <= 25.4 mm	Nut for vibration damping sandwiches	$ 0.75	labor	8		1	$ 6.00
90	Assemble, 1 kg, Loose	Bolt for lateral bar	$ 0.06	labor	1		1	$ 0.06
100	Assemble, 1 kg, Loose	Nut for lateral bar	$ 0.06	labor	1		1	$ 0.06
110	Ratchet <= 25.4 mm	Nut for lateral bar	$ 0.75	labor	1		1	$ 0.75
120	Reaction tool <= 25.4 mm	Nut for lateral bar	$ 0.25	labor	1		1	$ 0.25
130	Assemble, 1 kg, Interference	Assemble lines with radiator	$ 0.19	labor	2		1	$ 0.38
140	Ratchet <= 6.35 mm	Bolt Hose Clamp	$ 0.50	labor	2		1	$ 1.00
							Sub Total	**14.88**

ItemOrder	Fastener	Use	UnitCost	Size1	Unit1	Size2	Unit2	Quantity	Sub Total
10	Bolt, Grade 8.8 (SAE 5)	Bolt for lateral bar and radiator	0.04	6	mm			1	$ 0.04
20	Nut, Grade 8.8 (SAE 5)	Nuts for lateral bar, tabs and radiator	0.03	6	mm			9	$ 0.27
30	Hose Clamp, Miniature Bolt	Main line hose clamp	0.6	25.4	mm			2	$ 1.20
								Sub Total	**$ 1.51**

ItemOrder	Tooling	Use	UnitCost	Unit	Quantity	PVF	FractionIncluded	Sub Total
10	Welds - Welding Fixture Tabs	Tabs welding	$ 500.00	point	16	3000	1	$ 2.67
							Sub Total	**2.67**

University	Ecole Centrale Lyon			**Car #**	81	**Part Cost**	32.42
System	Engine and Drivetrain	**FileLink1**				**Qty**	1
Assembly	Cooling System	**FileLink2**		**FileLink1**			
Part	Coolant Lines	**FileLink3**		**FileLink2**		**Extended Cost**	$ 32.42
P/N Base	EN 08001			**FileLink3**			
Suffix	AA						
Details							

ItemOrder	Material	Use	UnitCost	Size1	Unit1	Size2	Unit2	Area Name	Area	Length	Density	Quantity	Sub Total
10	Hose, Silicone	Sleeve	$ 5.64	27.5	mm	1.4	m					1.00E+00	$ 5.64
												Sub Total	**$ 5.64**

ItemOrder	Process	Use	UnitCost	Unit	Quantity	Multiplier	Mult. Val.	Sub Total
10	Cut (scissors, knife)	Hose cutting	$ 0.46	cm	47		1	$ 21.62
30	Assemble, 1 kg, Interference	Hose and sleeve assembly	$ 0.19	labor	4			$ 0.76
40	Ratchet <= 6.35 mm	Bolt Hose Clamp	$ 0.50	labor	4			$ 2.00
							Sub Total	**$ 24.38**

ItemOrder	Fastener	Use	UnitCost	Size1	Unit1	Size2	Unit2	Quantity	Sub Total
10	Hose Clamp, Miniature Bolt	Main line hose clamp	0.6	25.4	mm			4	$ 2.40
								Sub Total	**$ 2.40**

University	Ecole Centrale Lyon			**Car #**	81	**Part Cost**	$ 11.84
System	Engine and Drivetrain	**FileLink1**				**Qty**	1
Assembly	Cooling System	**FileLink2**		**FileLink1**			
Part	Radiator	**FileLink3**		**FileLink2**		**Extended Cost**	$ 11.84
P/N Base	EN 08002			**FileLink3**			
Suffix	AA						
Details							

ItemOrder	Material	Use	UnitCost	Size1	Unit1	Size2	Unit2	Area Name	Area	Length	Density	Quantity	Sub Total
10	Heat Exchanger, Air-to-Liquid	Radiator	$ 0.0035	3384	cm^3							1	$ 11.84
												Sub Total	**$ 11.844**

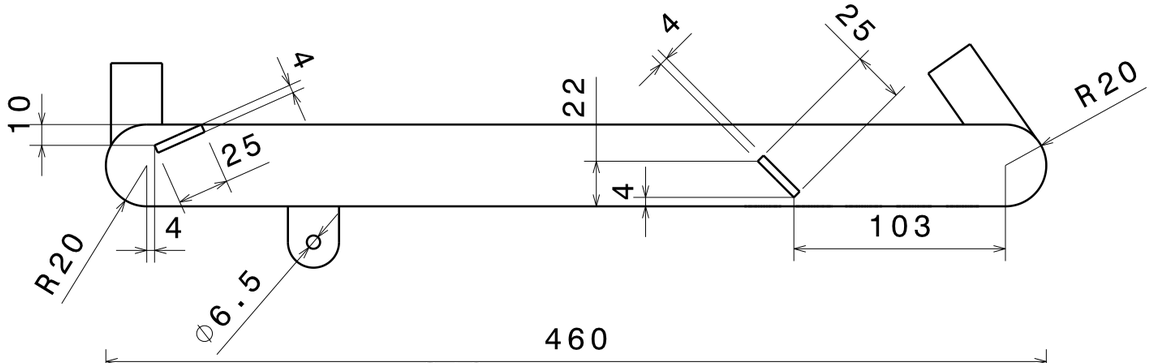

Vue de dessous
Echelle : 1:3

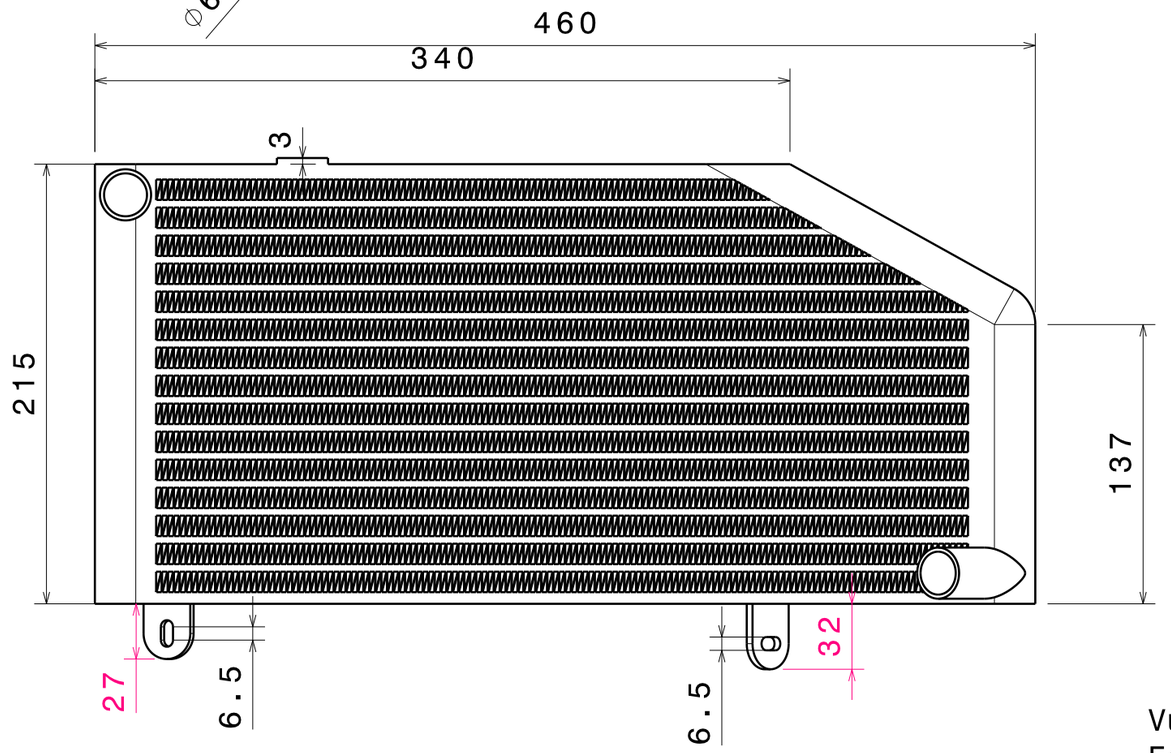

Vue de face
Echelle : 1:3

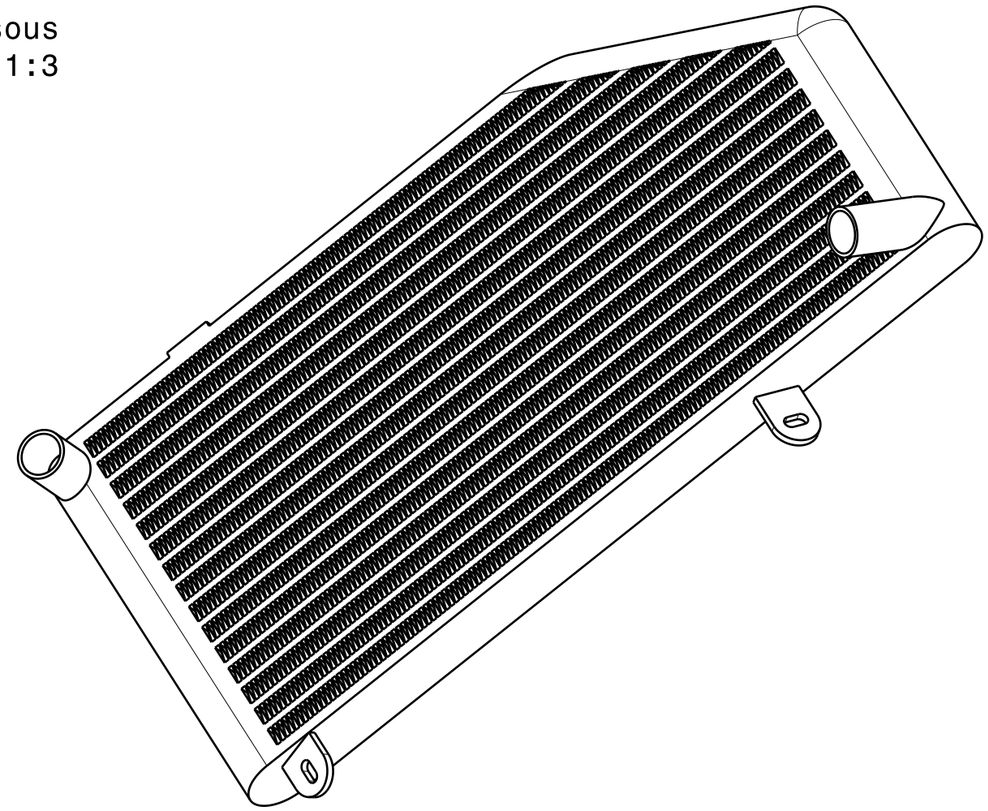

Vue isométrique
Echelle : 1:3

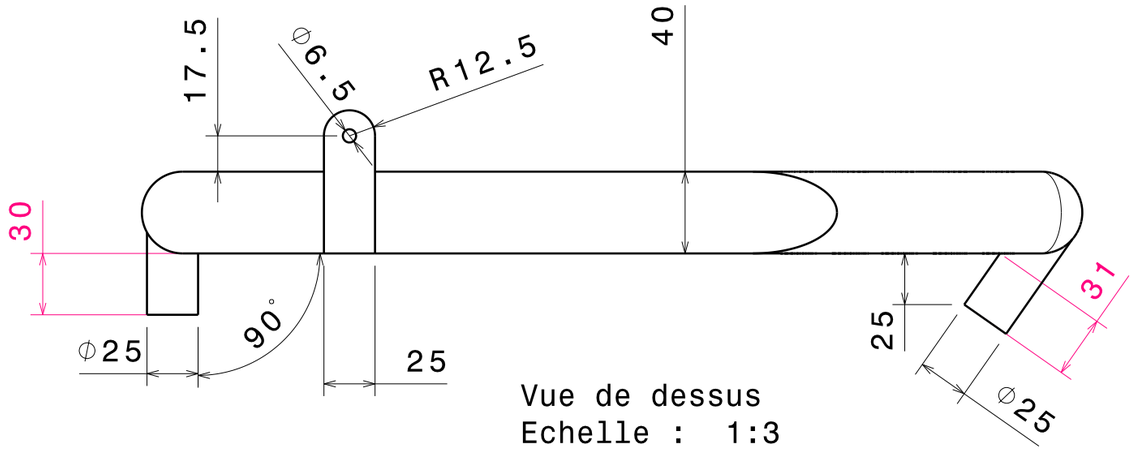

Vue de dessus
Echelle : 1:3

Tolérances générales ISO 2768 - mK

Taille A3		Ecurie Piston Sport Auto
Dessiné par Simon CHARAUDEAU	Date 13/12/2014	Désignation radiateur
Coordonnées 06 25 18 15 19 simon.charaudeau@ecl13.ec-lyon.fr		Quantité 1 / Matériau aluminium / Version 1.0
Plan vérifié par CCN		Echelle 1:3 / Numéro du plan 15-E-001 / Feuille 1/1

University	Ecole Centrale Lyon			**Car #**	81	**Part Cost**	30.77
System	Engine and Drivetrain	**FileLink1**				**Qty**	1
Assembly	Cooling System	**FileLink2**		**FileLink1**			
Part	Coolant Lines	**FileLink3**		**FileLink2**		**Extended Cost**	$ 30.77
P/N Base	EN 08003			**FileLink3**			
Suffix	AA						
Details							

ItemOrder	Material	Use	UnitCost	Size1	Unit1	Size2	Unit2	Area Name	Area	Length	Density	Quantity	Sub Total
10	Heat Exchanger Fan		$ 30.00									1	$ 30.00
												Sub Total	**$ 30.000**

ItemOrder	Process	Use	UnitCost	Unit	Quantity	Multiplier	Mult. Val.	Sub Total
10	Assemble, 1 kg, Line-on-line	Set fan to radiator	$ 0.13	labor	1		1	$ 0.13
20	Assemble, 1 kg, Loose	Push pin	$ 0.06	labor	4		1	$ 0.24
							Sub Total	**$ 0.37**

ItemOrder	Fastener	Use	UnitCost	Size1	Unit1	Size2	Unit2	Quantity	Sub Total
10	Pin, Plastic Push	Set fan to radiator	0.1					4	$ 0.40
								Sub Total	**$ 0.40**

University	Ecole Centrale Lyon			**Car #**	81	**Part Cost**	23.09
System	Engine and Drivetrain	**FileLink1**				**Qty**	1
Assembly	Cooling System	**FileLink2**		**FileLink1**			
Part	Coolant Lines	**FileLink3**		**FileLink2**		**Extended Cost**	$ 23.09
P/N Base	EN 08004			**FileLink3**			
Suffix	AA						
Details							

ItemOrder	Material	Use	UnitCost	Size1	Unit1	Size2	Unit2	Area Name	Area	Length	Density	Quantity	Sub Total
10	Aluminium, normal (per kg)	Lateral side	$ 4.20	45	mm	2.5	mm	Tube 45mm * 2,5mm	0.00027	0.15	2 710.00	1	$ 0.46
20	Aluminium, normal (per kg)	Uper and lower side	$ 4.20	50.000	mm	2	mm	Rectangular area 145mm*50mm	0.00100	0.145	2 710.00	1	$ 1.65
30	Aluminium, normal (per kg)	Filler neck	$ 4.20	50.000	mm	20	mm	Round 50mm diameter	0.00196	0.02	2 710.00	1	$ 0.45
40	Aluminium, normal (per kg)	Hose output	$ 4.20	20.000	mm	30	mm	Round 20mm diameter	0.00030	0.03	2 710.00	1	$ 0.10
50	Steel, Mild (per kg)	Expansion tank cap	$ 2.25	60.000	mm	20	mm	Round 60mm diameter	0.00300	0.02	7 860.00	1	$ 1.06
												Sub Total	**$ 3.72**

ItemOrder	Process	Use	UnitCost	Unit	Quantity	Multiplier	Mult. Val.	Sub Total
10	Machining Setup, Install and remove	Setup for machinig and removal	$ 1.30	unit	1		1	$ 1.30
20	Machining	Filler neck	$ 0.04	cm^3	86	Material - Aluminum	1	$ 3.44
	Machining Setup, Install and remove	for laser cut	$ 1.30	unit	1		1	$ 1.30
	Laser cut	Uper and lower side cutting	$ 0.01	cm	63.15	Material - Aluminum	1	$ 0.63
	Machining Setup, Install and remove	Setup for machinig and removal	$ 1.30	unit	1		1	$ 1.30
	Machining	Hose output	$ 0.04	cm^3	6.6	Material - Aluminum	1	$ 0.26
	Weld	Expansion tank welding	$ 0.15	cm	47.2	Material - Aluminum	1	$ 7.08
	Machining Setup, Install and remove	Setup for machinig and removal	$ 1.30	unit	1		1	$ 1.30
20	Machining	Expansion tank cap	$ 0.04	cm^3	6.04	Material - Steel	3	$ 0.72
30	Assemble, 1 kg, Interference	Expansion tank filler neck and cap assembly	$ 0.19	unit	1			$ 0.19
							Sub Total	**$ 17.53**

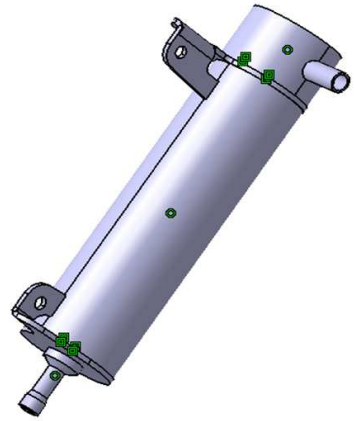

ItemOrder	Tooling	Use	UnitCost	Unit	Quantity	PVF	FracIncld	Sub Total
10	Welds - Welding Fixture Tabs	Expansion tank welding fixture	$ 500.00	point	11	3000	1	$ 1.83
							Sub Total	**$ 1.83**

Pour l'entraxe, utiliser le gabarit

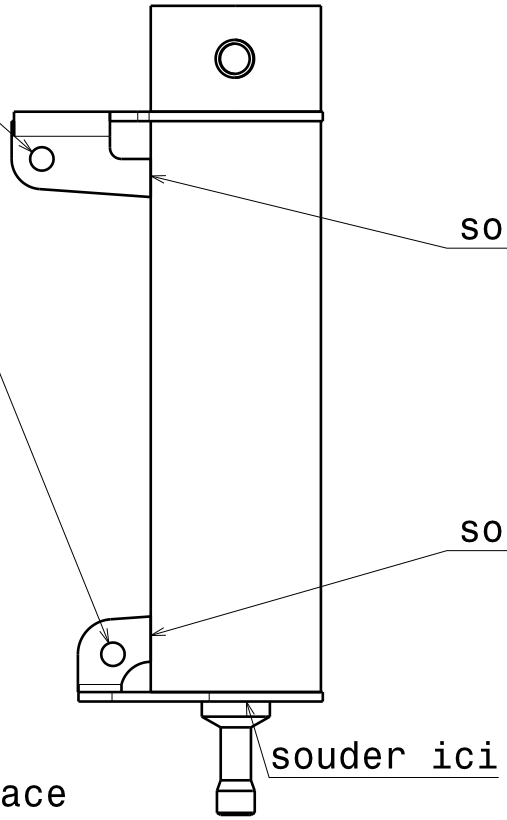

Vue de face
Echelle : 1:2

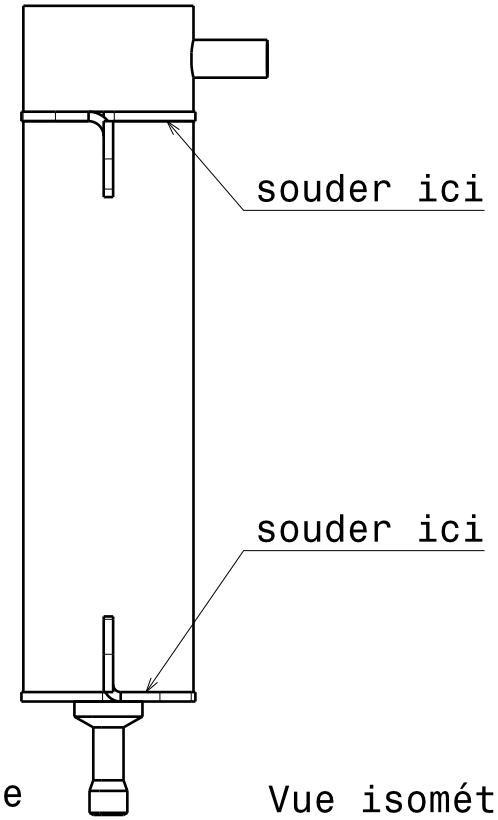

Vue de gauche
Echelle : 1:2

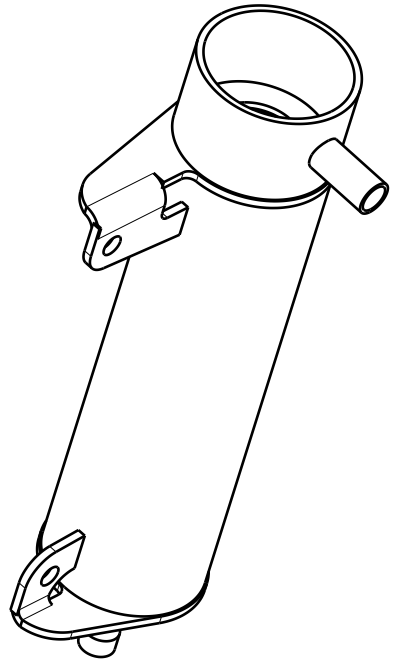

Vue isométrique
Echelle : 1:2

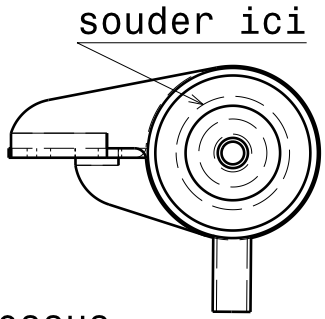

Vue de dessus
Echelle : 1:2

Taille A4		Ecurie Piston Sport Auto
Dessiné par simon	Date 01/06/2015	Désignation Vase expansion
Coordonnées XXX scharaud@ec-lyon.fr		Quantité 1 / Matériau Aluminium / Version 1.0
Plan vérifié par XXX 140		Echelle 1:2 / Numéro du plan SCU100 / Feuille 1/1

University	Ecole Centrale Lyon			**Car #**	81	**Part Cost**	1.764
System	Engine and Drivetrain	**FileLink1**				**Qty**	1
Assembly	Cooling System	**FileLink2**		**FileLink1**			
Part	Radiator upper tab	**FileLink3**		**FileLink2**		**Extended Cost**	$ 1.76
P/N Base	EN 08005			**FileLink3**			
Suffix	AA						
Details							

ItemOrder	Material	Use	UnitCost	Size1	Unit1	Size2	Unit2	Area Name	Area	Length	Density	Quantity	Sub Total
10	Steel, Mild (per kg)	Radiator upper tab	$ 2.25	0.013	kg			Rectangular area	0.000800	0.002	7 860.00	1.00E+00	$ 0.03
10	Paint	tab painting	$ 10.00	0.002	m²							1.00E+00	$ 0.02
												Sub Total	**$ 0.048**

ItemOrder	Process	Use	UnitCost	Unit	Quantity	Multiplier	Mult. Val.	Sub Total
10	Machining Setup, Install and remove	Setup for laser cut	$ 1.30	labor	1		1	$ 1.30
20	Laser Cut	Laser cut	$ 0.01	cm	13.5	Material - Steel	3	$ 0.41
30	Aerosol Apply	Tab painting	$ 5.25	m²	0.002			$ 0.01
							Sub Total	**$ 1.72**

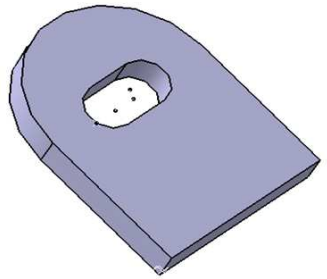

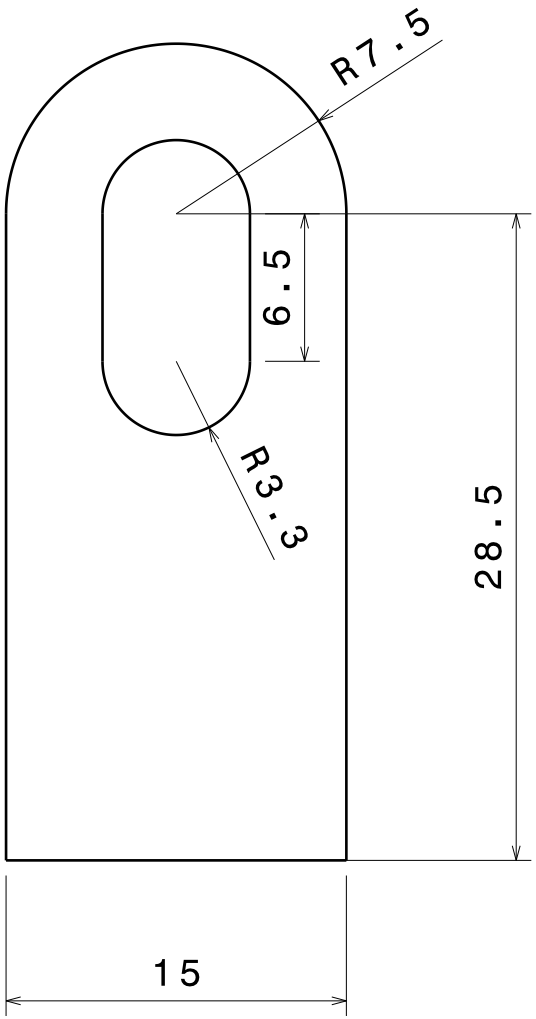

Vue de face
Echelle : 3:1

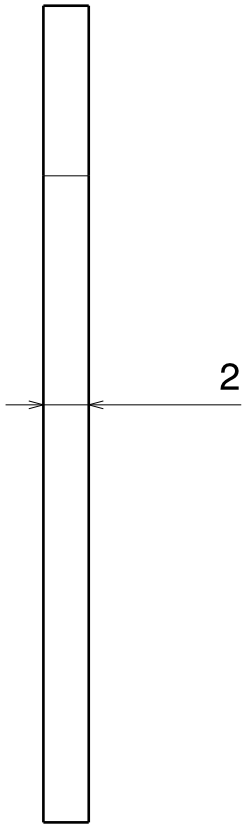

Vue de gauche
Echelle : 3:1

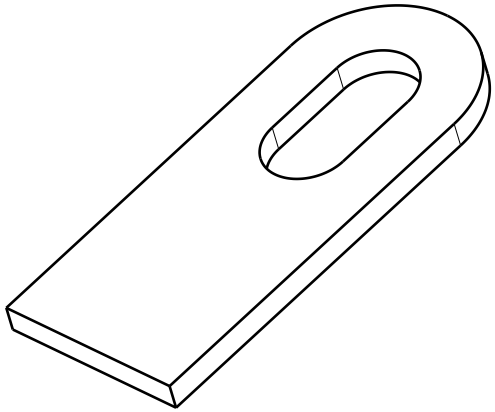

Vue isométrique
Echelle : 2:1

Tolérances générales ISO 2768 - mK

Taille A4		Ecurie Piston Sport Auto
Dessiné par Simon CHARAUDEAU	Date 22/12/2014	Désignation Chape radiateur haut
Coordonnées 06 25 18 15 19 simon.charaudeau@ecl13.ec-lyon.fr		Quantité 1 / Matériau Acier S235 / Version 1.0
Plan vérifié par PMR 142		Echelle 1:1 / Numéro du plan 15-M-025 / Feuille 1/1

University	Ecole Centrale Lyon			**Car #**	81	**Part Cost**	1.711
System	Engine and Drivetrain	**FileLink1**				**Qty**	1
Assembly	Cooling System	**FileLink2**		**FileLink1**			
Part	Radiator lower tab	**FileLink3**		**FileLink2**		**Extended Cost**	$ 1.71
P/N Base	EN 08006			**FileLink3**			
Suffix	AA						
Details							

ItemOrder	Material	Use	UnitCost	Size1	Unit1	Size2	Unit2	Area Name	Area	Length	Density	Quantity	Sub Total
10	Steel, Mild (per kg)	Radiator lower tab	$ 2.25	0.011	kg			Rectangular area	0.000675	0.002	7 860.00	1	$ 0.024
20	Paint	tab painting	$ 10.00	0.002	m²							1	$ 0.020
												Sub Total	**$ 0.044**

ItemOrder	Process	Use	UnitCost	Unit	Quantity	Multiplier	Mult. Val.	Sub Total
10	Machining Setup, Install and remove	Setup for laser cut	$ 1.30	labor	1		1	$ 1.30
20	Laser Cut	Laser cut	$ 0.01	cm	11.9	Material - Steel	3	$ 0.36
30	Aerosol Apply	Tab painting	$ 5.25	m²	0.002			$ 0.01
							Sub Total	**$ 1.67**

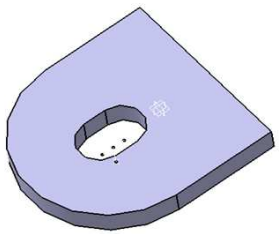

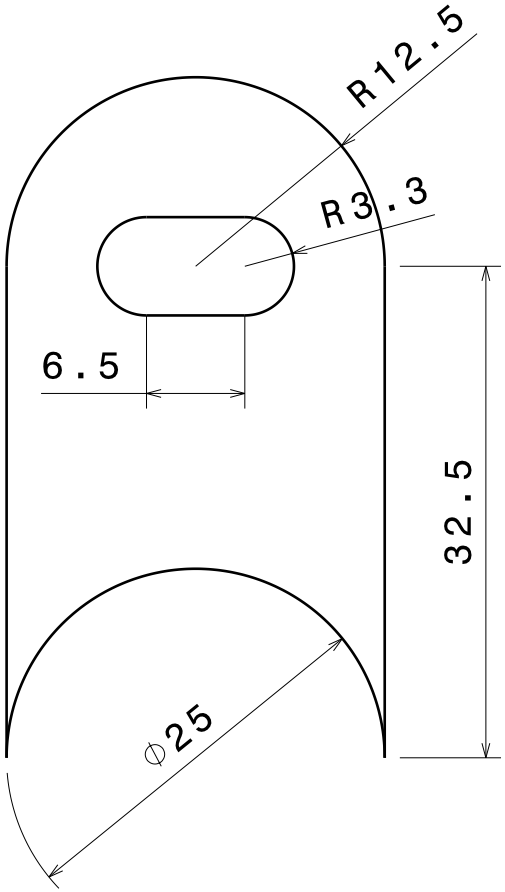

Vue de face
Echelle : 2:1

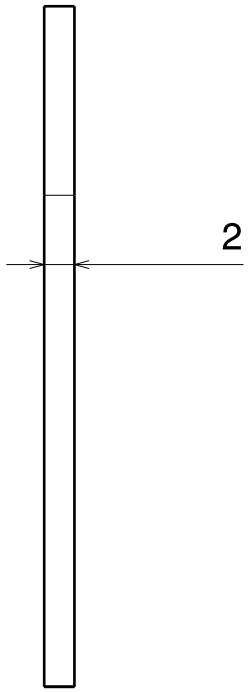

Vue de gauche
Echelle : 2:1

Vue isométrique
Echelle : 1:1

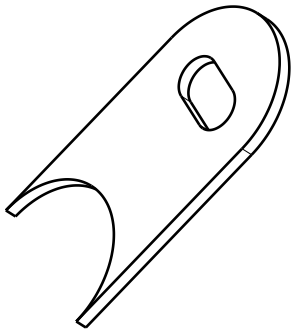

Tolérances générales ISO 2768 - mK

Taille A4		Ecurie Piston Sport Auto
Dessiné par Simon CHARAUDEAU	Date 22/12/2014	Désignation Chape radiateur bas
Coordonnées 06 25 18 15 19 simon.charaudeau@ecl13.ec-lyon.fr		Quantité 1 / Matériau Acier S235 / Version 1.0
Plan vérifié par PMR 144		Echelle 1:1 / Numéro du plan 15-M-026 / Feuille 1/1

University	Ecole Centrale Lyon			**Car #**	81	**Part Cost**	1.761
System	Engine and Drivetrain	**FileLink1**				**Qty**	2
Assembly	Cooling System	**FileLink2**		**FileLink1**			
Part	Radiator lateral tab	**FileLink3**		**FileLink2**		**Extended Cost**	$ 3.52
P/N Base	EN 08006			**FileLink3**			
Suffix	AA						
Details							

ItemOrder	Material	Use	UnitCost	Size1	Unit1	Size2	Unit2	Area Name	Area	Length	Density	Quantity	Sub Total
10	Steel, Mild (per kg)	Radiator lateral tab	$ 2.25	25.000	mm	2	mm	Rectangular area (plate) 25mm x 2mm	0.0001	0.045	7 860.00	1	$ 0.04
20	Paint	tab painting	$ 10.00	0.001	m²							1	$ 0.01
												Sub Total	**$ 0.050**

ItemOrder	Process	Use	UnitCost	Unit	Quantity	Multiplier	Mult. Val.	Sub Total
10	Machining Setup, Install and remove	Setup for laser cut	$ 1.30	unit	1		1	$ 1.30
20	Laser Cut	Laser cut	$ 0.01	cm	15.6	Material - Steel	1	$ 0.16
30	Sheet metal bend	Bend	$ 0.25	bend	1		1	$ 0.25
40	Aerosol Apply	Tab painting	$ 5.25	m²	0.001			$ 0.01
							Sub Total	**$ 1.71**

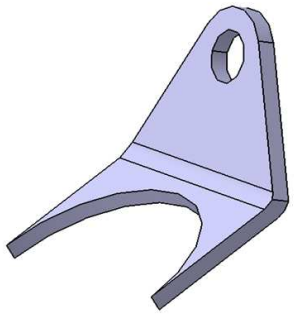

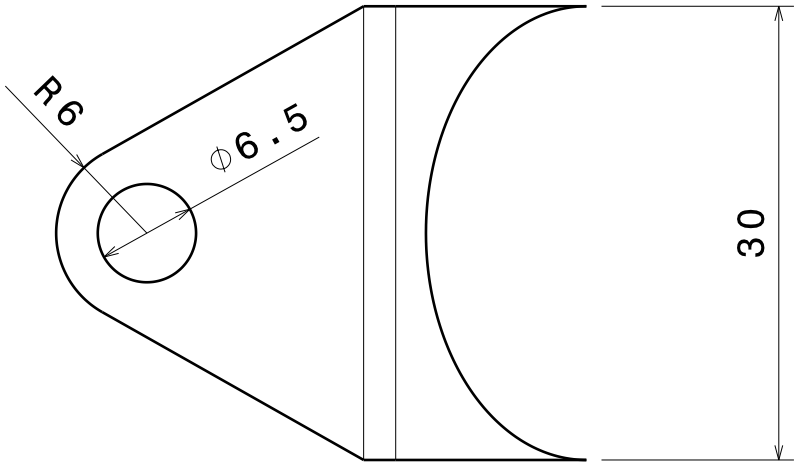

Vue de face
Echelle : 2:1

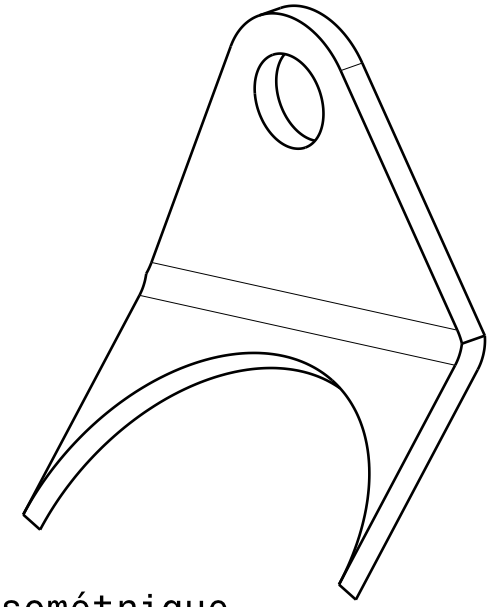

Vue isométrique
Echelle : 2:1

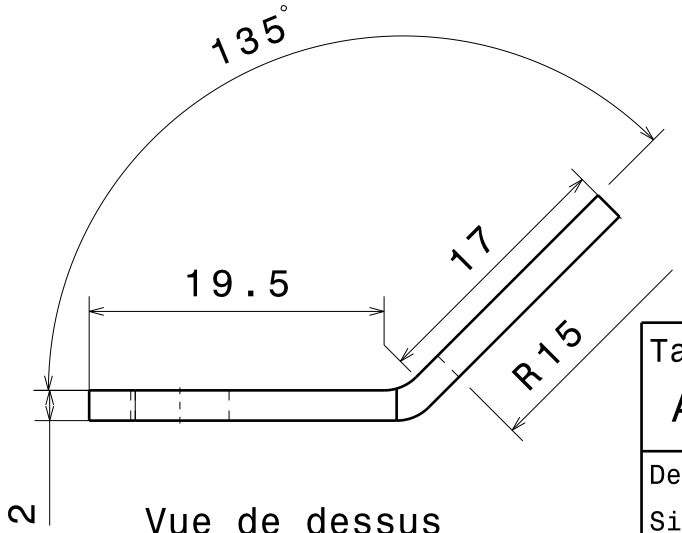

Vue de dessus
Echelle : 2:1

Tolérances générales ISO 2768 - mK

Taille A4		Ecurie Piston Sport Auto
Dessiné par Simon CHARAUDEAU	Date 22/12/2014	Désignation: Chape radiateur côté
Coordonnées 06 25 18 15 19 simon.charaudeau@ecl13.ec-lyon.fr		Quantité 1 / Matériau Acier S235 / Version 1.0
Plan vérifié par PMR 146		Echelle 1:1 / Numéro du plan 15-M-027 / Feuille 1/1

University	Ecole Centrale Lyon			**Car #**	81	**Part Cost**	8.111
System	Engine and Drivetrain	**FileLink1**				**Qty**	1
Assembly	Cooling System	**FileLink2**		**FileLink1**			
Part	Lateral bar	**FileLink3**		**FileLink2**		**Extended Cost**	$ 8.11
P/N Base	EN 08007			**FileLink3**			
Suffix	AA						
Details							

ItemOrder	Material	Use	UnitCost	Size1	Unit1	Size2	Unit2	Area Name	Area	Length	Density	Quantity	Sub Total
10	Aluminium, Normal (per kg)	Lateral bar	$ 4.20	270.000	mm	2.5	mm	Rectangular area	0.001	0.5000	2 710.00	1	$ 3.84
												Sub Total	**$ 3.84**

ItemOrder	Process	Use	UnitCost	Unit	Quantity	Multiplier	Mult. Val.	Sub Total
10	Machining Setup, Install and remove	Setup for laser cut	$ 1.30	labor	1		1	$ 1.30
20	Laser Cut	Laser cut	$ 0.01	cm	172		1	$ 1.72
30	Sheet metal bend	Bar twist	$ 0.25	bend	2			$ 0.50
40	Sheet metal bend	End bends	$ 0.25	bend	3			$ 0.75
							Sub Total	**$ 4.27**

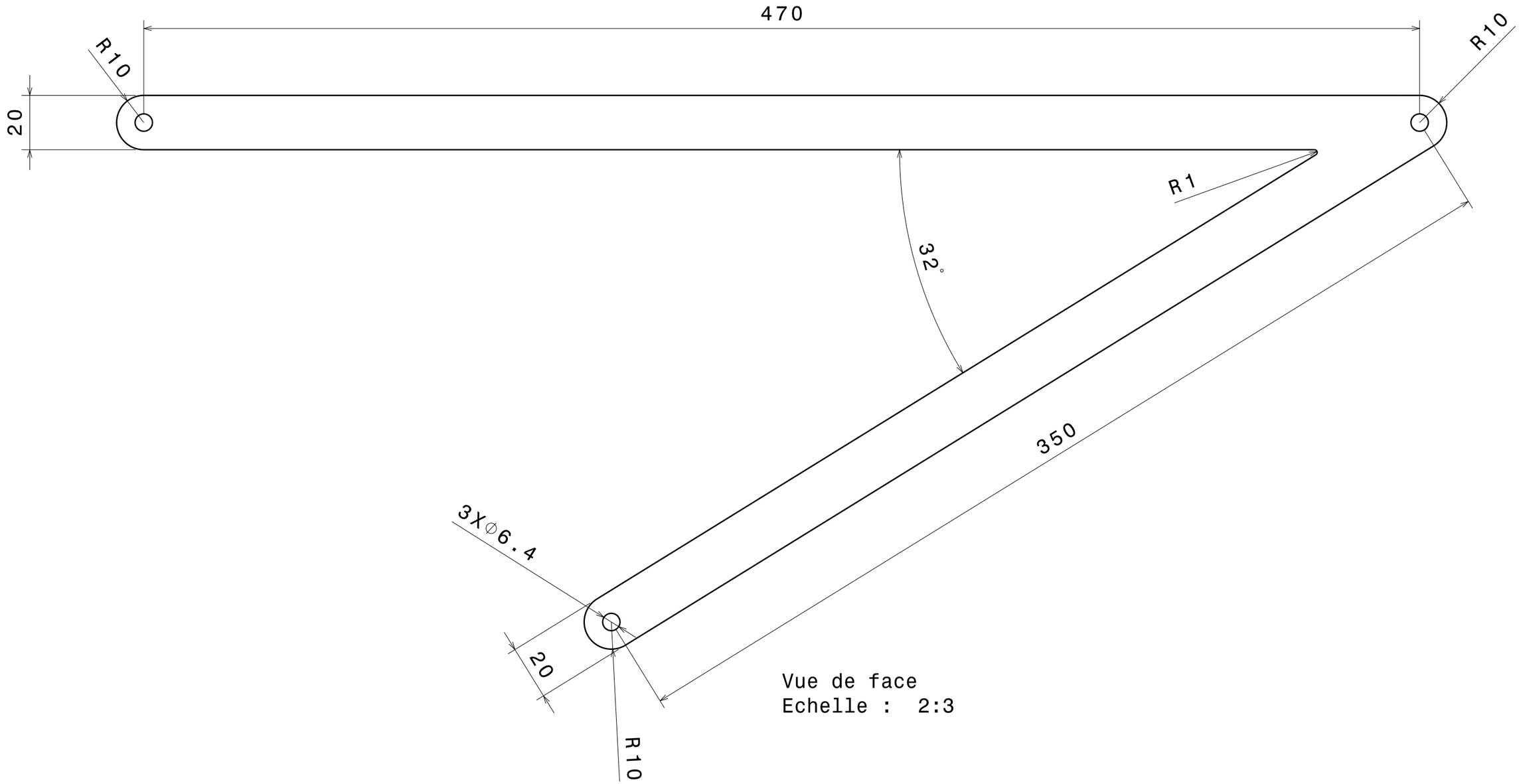

Vue de face
Echelle : 2:3

Epaisseur 2.5 mm

Tolérances générale ISO 2768 mk

Taille A3		Ecurie Piston Sport Auto
Dessiné par Simon CHARAUDEAU	Date 07/02/2015	Désignation Torsade v2
Coordonnées 06 25 18 15 19 simon.charaudeau@ecl13.ec-lyon.fr		Quantité 1 / Matériau Aluminium au choix / Version 1.0
Plan vérifié par LBD		Echelle 2:3 / Numéro du plan 15-M-078 / Feuille 1/1

University	Ecole Cenrale de Lyon	**Car #**	81	**Asm Cost**	128.44
System	Engine and Drivetrain			**Qty**	1
Assembly	Shifter	**FileLink1**			
P/N Base	EN A0009	**FileLink2**		**Extended Cost**	$ 128.44
Suffix	AA	**FileLink3**			
Details	The gearshifting system relies on a DC brushless motor.				

ItemOrder	Part	Part Cost	Quantity	Sub Total
10	Engine gearbox drum gear	$ 17.97	1	$ 17.97
20	Engine gearbox shifting pinion shaf	$ 17.60	1	$ 17.60
30	Engine gearbox actuator tab	$ 1.88	1	$ 1.88
40	Front engine gearbox actuator mo	$ 2.57	1	$ 2.57
50	Rear engine gearbox actuator mou	$ 2.93	1	$ 2.93
60	Engine gearbox actuator coupling	$ 5.74	1	$ 5.74
70	Engine gearbox actuator	$ 40.00	1	$ 40.00
80	Engine gearbox actuator elastome	$ 2.43	1	$ 2.43
			Sub Total	**$ 91.12**

ItemOrder	Material	Use	UnitCost	Size1	Unit1	Size2	Unit2	Area Name	Area	Length	Density	Quantity	Sub Total
10	Paint	Protect steel tab from rust	$ 10.00	0.001	m²							1.00	$ 10.00
												Sub Total	**$ 10.00**

ItemOrder	Process	Use	UnitCost	Unit	Quantity	Multiplier	Mult. Val.	Sub Total
10	Weld	Weld tab to chassis	0.15	unit	5			0.75
20	Aerosol apply	Paint tab to protect from rust	5.25	m²	0.001			0.00525
30	Power Tool <= 25.4 mm	Remove engine case bolts	0.25	unit	13	Disassemble	0.8	2.6
40	Assemble, 3 kg, Line-on-Line	Remove engine case	0.38	unit	1	Disassemble	0.8	0.304
50	Power Tool <= 6.35 mm	Remove clutch pressure bolts	0.25	unit	5	Disassemble	0.8	1
60	Assemble, 1 kg, Loose	Remove clutch pressure springs	0.06	unit	5	Disassemble	0.8	0.24
70	Assemble, 1 kg, Loose	Remove pressure disc assembly	0.06	unit	1	Disassemble	0.8	0.048
80	Assemble, 1 kg, Loose	Remove clutch discs assembly	0.06	unit	1	Disassemble	0.8	0.048
90	Power Tool <= 25.4 mm	Remove central clutch nut	0.25	unit	1	Disassemble	0.8	0.2
100	Assemble, 1 kg, Loose	Remove central clutch assembly	0.06	unit	1	Disassemble	0.8	0.048
110	Assemble, 1 kg, Loose	Remove clutch guide	0.06	unit	1	Disassemble	0.8	0.048
120	Assemble, 1 kg, Loose	Remove clutch roller case assembly	0.06	unit	1	Disassemble	0.8	0.048
130	Assemble, 3 kg, Loose	Remove clutch flywheel	0.19	unit	1	Disassemble	0.8	0.152
140	Power Tool <= 6.35 mm	Remove shifting shaft retaining bolt	0.25	unit	1	Disassemble	0.8	0.2
150	Assemble, 1 kg, Loose	Remove shifting shaft retaining plate	0.06	unit	1	Disassemble	0.8	0.048
160	Assemble, 1 kg, Line-on-Line	Remove shifting shaft	0.13	unit	1	Disassemble	0.8	0.104
170	Power Tool <= 25.4 mm	Remove shifting shaft stop	0.25	unit	1	Disassemble	0.8	0.2
180	Power Tool <= 6.35 mm	Remove gearshift drum stopper bolt	0.25	unit	1	Disassemble	0.8	0.2
190	Assemble, 1 kg, Interference	Remove geashift drum stopper assembly	0.19	unit	1	Disassemble	0.8	0.152
200	Power Tool <= 25.4 mm	Remove shift star bolt	0.25	unit	1	Disassemble	0.8	0.2
210	Assemble, 1 kg, Loose	Mount gearbox drum gear	0.06	unit	1			0.06
220	Power Tool <= 25.4 mm	Tighten shift star bolt	0.25	unit	1			0.25
230	Assemble, 1 kg, Interference	Mount retaining ring on shifting pinion shaft	0.19	unit	1			0.19
240	Assemble, 1 kg, Loose	Mount whasher on shifting pinion shaft	0.06	unit	1			0.06
250	Assemble, 1 kg, Line-on-Line	Mount shifting pinion shaft	0.13	unit	1			0.13
260	Assemble, 1 kg, Loose	Mount whasher on shifting pinion shaft	0.06	unit	1			0.06
270	Assemble, 1 kg, Interference	Mount retaining ring on shifting pinion shaft	0.19	unit	1			0.19
280	Assemble, 1 kg, Line-on-Line	Mount gearbox actuator coupling	0.13	unit	1			0.13
290	Assemble, 3 kg, Loose	Mount clutch flywheel	0.19	unit	1			0.19
300	Assemble, 1 kg, Loose	Mount clutch roller case assembly	0.06	unit	1			0.06
310	Assemble, 1 kg, Loose	Mount clutch guide	0.06	unit	1			0.06
320	Assemble, 1 kg, Loose	Mount central clutch	0.06	unit	1			0.06
330	Assemble, 1 kg, Loose	Mount central clutch washers	0.06	unit	2			0.12
340	Power Tool <= 25.4 mm	Tighten central clutch nut	0.25	unit	1			0.25
350	Assemble, 1 kg, Loose	Mount clutch discs	0.06	unit	15			0.9
360	Assemble, 1 kg, Loose	Mount pressure disc assembly	0.06	unit	1			0.06
370	Assemble, 1 kg, Loose	Mount clutch pressure springs	0.06	unit	5			0.3

380	Power Tool <= 6.35 mm	Mount clutch pressure bolts	0.25	unit	5	Fastener Engagement Length > 2D	1.25	1.5625
390	Assemble, 3 kg, Line-on-Line	Mount engine case	0.38	unit	1			0.38
400	Power Tool <= 25.4 mm	Mount engine case bolts	0.25	unit	13	Fastener Engagement Length > 2D	1.25	4.0625
410	Assemble, 1 kg, Loose	Mount front actuator mount	0.06	unit	1			0.06
420	Assemble, 1 kg, Loose	Mount rear actuator mount	0.06	unit	1			0.06
430	Assemble, 1 kg, Loose	Mount washers on screws	0.06	unit	2			0.12
440	Assemble, 1 kg, Loose	Mount screws on actuator mounts	0.06	unit	2			0.12
450	Assemble, 1 kg, Loose	Mount washers on screws	0.06	unit	2			0.12
460	Hand - Start Only	Mount nut on screws	0.12	unit	2			0.24
470	Assemble, 3 kg, Line-on-Line	Mount actuator assembly on coupling	0.38	unit	1			0.38
480	Assemble, 1 kg, Loose	Mount elastomer on tab	0.06	unit	1			0.06
490	Assemble, 1 kg, Loose	Align rear mount with tab	0.06	unit	1			0.06
500	Assemble, 1 kg, Loose	Mount washer on elastomer screw	0.06	unit	1			0.06
510	Wrench <= 6.35 mm	Tighten elastomer screw	1	unit	1	Fastener Engagement Length > 2D	1.25	1.25
520	Wrench <= 6.35 mm	Tighten actuator mounts's bolts	1	unit	2	Fastener Engagement Length > 4D	1.5	3
530	Reaction Tool <= 6.35 mm		0.25	unit	2			0.5
540	Wrench <= 6.35 mm	Tighten coupling bolts	1	unit	4	Fastener Engagement Length > 2D	1.25	5
							Sub Total	**$ 26.70**

ItemOrder	Fastener	Use	UnitCost	Size1	Unit1	Size2	Unit2	Quantity	Sub Total
10	Bolt,Grade 8.8 (SAE)	Fasten star gear to the shift star	$ 0.16	8	mm	40	mm	1	$ 0.16
20	Bolt,Grade 8.8 (SAE)	Lock actuator between mount brackets	$ 0.02	4	mm	20	mm	3	$ 0.06
30	Washer, Grade 8.8 (SAE 5)	Lock actuator between mount brackets	$ 0.01	4	mm			5	$ 0.05
40	Nut, Grade 8.8 (SAE 5)	Lock actuator between mount brackets	$ 0.01	4	mm			2	$ 0.02
50	Washer, Grade 8.8 (SAE 5)	Make contact between rings and engine case	$ 0.01	14	mm	21	mm	2	
60	Retaining Ring, External	Retain shifting pinion shaft	$ 0.05	14	mm			2	
								Sub Total	**$ 0.29**

ItemOrder	Tooling	Use	UnitCost	Unit	Quantity	PVF	FractionIncluded	Sub Total
10	Welds - Welding Fixture		$ 500.00	point	2	3000	1	$ 0.33
							Sub Total	**$ 0.33**

University	Ecole Centrale de Lyon			**Car #**	81	**Part Cost**	$ 17.97
System	Engine and Drivetrain	**FileLink1**				**Qty**	1
Assembly	Shifter	**FileLink2**		**FileLink1**			
Part	Engine gearbox drum gear	**FileLink3**		**FileLink2**		**Extended Cost**	$ 17.97
P/N Base	EN 09001			**FileLink3**			
Suffix	AA						
Details	Mounts on engine shift star						

ItemOrder	Material	Use	UnitCost	Size1	Unit1	Size2	Unit2	Area Name	Area	Length	Density	Quantity	Sub Total
10	Steel, Alloy	Material for part	$ 2.25	57	mm			circle	2.55E-03	0.036	7 850	1.00	$ 1.62
												Sub Total	**$ 1.62**

ItemOrder	Process	Use	UnitCost	Unit	Quantity	Multiplier	Mult. Val.	Sub Total
10	Machining Setup, Install and remove	Setup for machining	$ 1.30	unit	1			$ 1.30
20	Machining	Shift star contact	$ 0.04	Cm^3	50	Material – Steel	3	$ 6.00
30	Machining setup, Change		$ 0.65	unit	1			$ 0.65
40	Machining	Screw hole	$ 0.04	Cm^3	5	Material – Steel	3	$ 0.60
50	Drilled holes < 25.4 mm dia.		$ 0.35	unit	6	Material – Steel	3	$ 6.30
60	Gear shaping		$ 0.50	cm	1	Material – Steel	3	$ 1.50
							Sub Total	**$ 16.35**

University	Ecole Centrale de Lyon			**Car #**	81	**Part Cost**	$ 17.48
System	Engine and Drivetrain	**FileLink1**				**Qty**	1
Assembly	Shifter	**FileLink2**		**FileLink1**			
Part	Engine gearbox shifting pinion shaft	**FileLink3**		**FileLink2**		**Extended Cost**	$ 17.48
P/N Base	EN 09002			**FileLink3**			
Suffix	AA						
Details	Replaces the engine's gear selector shaft						

ItemOrder	Material	Use	UnitCost	Size1	Unit1	Size2	Unit2	Area Name	Area	Length	Density	Quantity	Sub Total
10	Steel, Alloy	Material for part	$ 2.25	27	mm			circle	5.72E-04	0.236	7850	1	$ 2.39
												Sub Total	**$ 2.39**

ItemOrder	Process	Use	UnitCost	Unit	Quantity	Multiplier	Mult. Val.	Sub Total
10	Machining Setup, Install and remove	Setup for machining	$ 1.30	unit	1			$ 1.30
20	Machining		$ 0.04	Cm^3	97	Material – Steel	3	$ 11.64
30	Machining setup, Change		$ 0.65	unit	1			$ 0.65
40	Machining		$ 0.04	Cm^3	1	Material – Steel	3	
50	Gear shaping		$ 0.50	cm	1	Material – Steel	3	$ 1.50
							Sub Total	**$ 15.09**

University	Ecole Centrale de Lyon			**Car #**	81	**Part Cost**	$ 1.88
System	Engine and Drivetrain	**FileLink1**				**Qty**	1
Assembly	Shifter	**FileLink2**		**FileLink1**			
Part	Engine gearbox actuator tab	**FileLink3**		**FileLink2**		**Extended Cost**	$ 1.88
P/N Base	EN 09003			**FileLink3**			
Suffix	AA						
Details							

ItemOrder	Material	Use	UnitCost	Size1	Unit1	Size2	Unit2	Area Name	Area	Length	Density	Quantity	Sub Total
10	Steel, Mild	Material for part	$ 2.25	23	mm	37	mm	rectangular	0	0.00	7 800.00	1	$ 0.04
												Sub Total	**$ 0.04**

ItemOrder	Process	Use	UnitCost	Unit	Quantity	Multiplier	Mult. Val.	Sub Total
10	Machining Setup, Install and	Setup for laser cut	$ 1.30	unit	1			$ 1.30
20	Laser cut		$ 0.01	cm	18	Material – Steel	3	$ 0.54
							Sub Total	**$ 1.84**

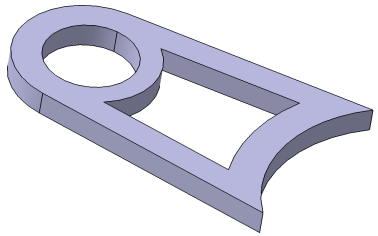

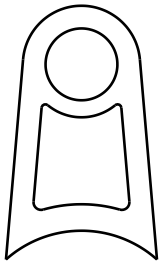

Vue de dessus
Echelle : 1:1

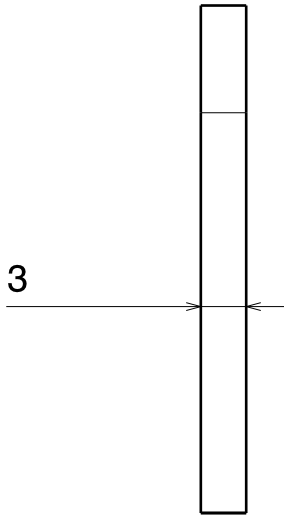

Vue de côté
Echelle : 2:1

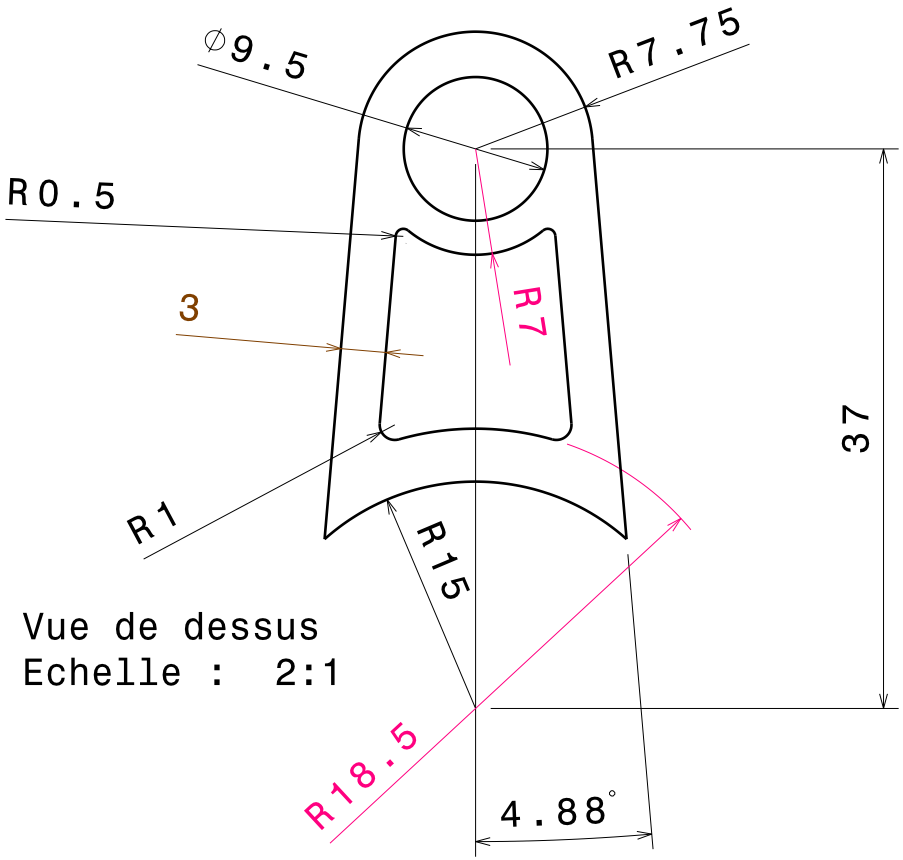

Vue de dessus
Echelle : 2:1

Tolérances générales ISO 2768 - mK

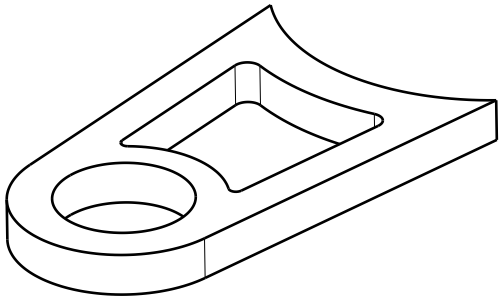

Vue isométrique
Echelle : 2:1

Taille A4		Ecurie Piston Sport Auto
Dessiné par Jérémy GISSINGER	Date 26/11/2014	Désignation Chape châssis motoreducteur
Coordonnées Tel : 06 23 29 34 32 jeremy.gissinger@ecl13.ec-lyon.fr		Quantité 1 / Matériau Acier S235 / Version 1.0
Plan vérifié par MZR 154		Echelle 2:1 / Numéro du plan 15-M-034 / Feuille 1/1

University	Ecole Centrale de Lyon			**Car #**	81	**Part Cost**	$ 3.05
System	Engine and Drivetrain	**FileLink1**				**Qty**	1
Assembly	Shifter	**FileLink2**		**FileLink1**			
Part	Front engine gearbox actuator mount	**FileLink3**		**FileLink2**		**Extended Cost**	$ 3.05
P/N Base	EN 09004			**FileLink3**			
Suffix	AA						
Details	Bracket that maintains the gearbox actuator						

ItemOrder	Material	Use	UnitCost	Size1	Unit1	Size2	Unit2	Area Name	Area	Length	Density	Quantity	Sub Total
10	Aluminium, Normal	Material for part	$ 4.20	104	mm	11	mm	rectangular	0.00114	0.002	2 710.00	1	$ 0.03
												Sub Total	**$ 0.03**

ItemOrder	Process	Use	UnitCost	Unit	Quantity	Multiplier	Mult. Val.	Sub Total
10	Machining Setup, Install and remove	Setup for laser cut	$ 1.30	unit	1			$ 1.30
20	Laser cut		$ 0.01	cm	24	Material, Steel	3	$ 0.72
30	Sheet metal bends		$ 0.25	unit	4			$ 1.00
							Sub Total	**$ 3.02**

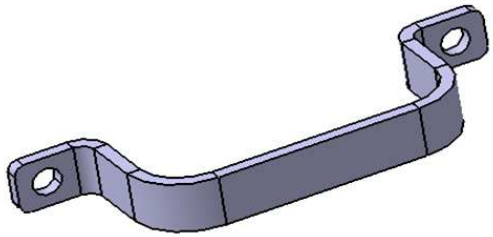

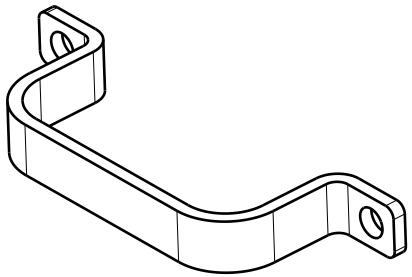

Vue isométrique
Echelle : 1:1

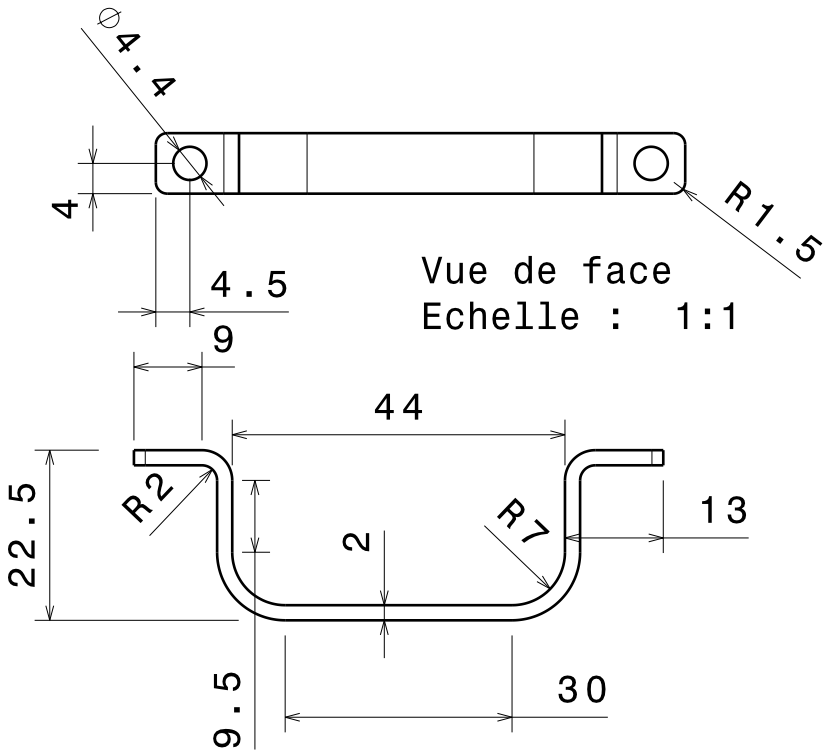

Vue de face
Echelle : 1:1

Vue de dessus
Echelle : 1:1

Tolérances Générales ISO 2768 - mK

Taille A4		Ecurie Piston Sport Auto
Dessiné par Jérémy GISSINGER	Date 26/11/2014	Désignation Demi-collier motoréducteur avt.
Coordonnées Tel : 06 23 29 34 32 jeremy.gissinger@ecl13.ec-lyon.fr		Quantité 1 / Matériau Aluminium (nuance quelconque) / Version 1.0
Plan vérifié par MDZ 156		Echelle 1:1 / Numéro du plan 15-M-020 / Feuille 1/1

University	Ecole Centrale de Lyon			**Car #**	81	**Part Cost**	$ 2.93
System	Engine and Drivetrain	**FileLink1**				**Qty**	1
Assembly	Shifter	**FileLink2**		**FileLink1**			
Part	Rear engine gearbox actuator mount	**FileLink3**		**FileLink2**		**Extended Cos**	$ 2.93
P/N Base	EN 09005			**FileLink3**			
Suffix	AA						
Details	Bracket that maintains the gearbox actuator						

ItemOrder	Material	Use	UnitCost	Size1	Unit1	Size2	Unit2	Area Name	Area	Length	Density	Quantity	Sub Total
10	Aluminium, Normal	Material for part	$ 4.20	105	mm	30	mm	rectangular	0.00315	0.002	2 710.00	1	$ 0.07
												Sub Total	**$ 0.07**

ItemOrder	Process	Use	UnitCost	Unit	Quantity	Multiplier	Mult. Val.	Sub Total
10	Machining Setup,	Setup for laser cut	$ 1.30	unit	1			$ 1.30
20	Laser cut		$ 0.01	cm	31			$ 0.31
30	Sheet metal bends		$ 0.25	unit	5			$ 1.25
							Sub Total	**$ 2.86**

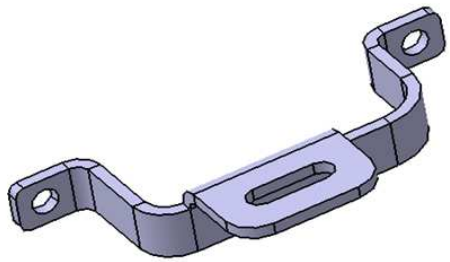

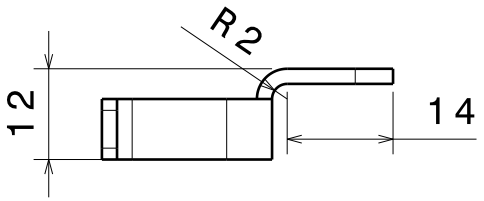

Vue de côté
Echelle : 1:1

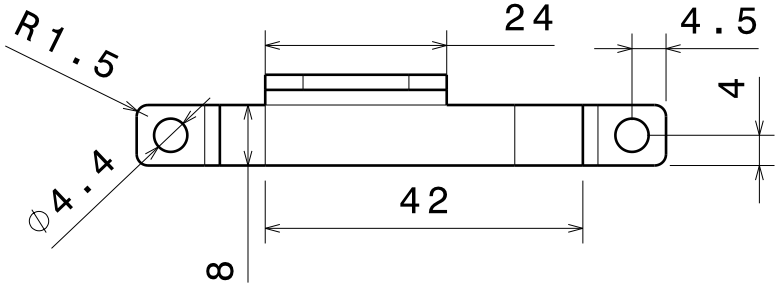

Vue de face
Echelle : 1:1

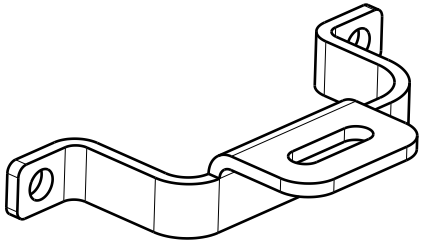

Vue isométrique
Echelle : 1:1

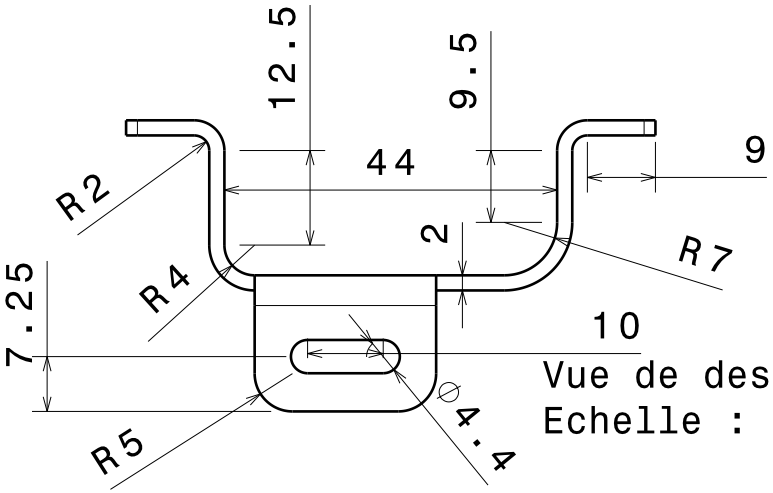

Vue de dessus
Echelle : 1:1

Tolérances générales ISO 2768 - mK

Taille A4		Ecurie Piston Sport Auto
Dessiné par Jérémy GISSINGER	Date 26/11/2014	Désignation Demi-collier motoréducteur arr.
Coordonnées Tel : 06 23 29 34 32 jeremy.gissinger@ecl13.ec-lyon.fr		Quantité 1 / Matériau Aluminium (nuance quelconque) / Version 1.0
Plan vérifié par MZR 158		Echelle 1:1 / Numéro du plan 15-M-021 / Feuille 1/1

University	Ecole Centrale de Lyon			**Car #**	81	**Part Cost**	$ 5.74
System	Engine and Drivetrain	**FileLink1**				**Qty**	1
Assembly	Shifter	**FileLink2**		**FileLink1**			
Part	Rear engine gearbox actuator mount	**FileLink3**		**FileLink2**		**Extended Cos**	$ 5.74
P/N Base	EN 09006			**FileLink3**			
Suffix	AA						
Details	Bracket that maintains the gearbox actuator						

ItemOrder	Material	Use	UnitCost	Size1	Unit1	Size2	Unit2	Area Name	Area	Length	Density	Quantity	Sub Total
10	Aluminium, Normal	Material for part	$ 4.20	27	mm			circle	5.72E-04	0.038	2 710	1.00	$ 0.25
												Sub Total	**$ 0.25**

ItemOrder	Process	Use	UnitCost	Unit	Quantity	Multiplier	Mult. Val.	Sub Total
10	Machining Setup,	Setup for machining	$ 1.30	unit	1			$ 1.30
20	Machining		$ 0.04	Cm³	5			$ 0.20
30	Machining setup,		$ 0.65	unit	1			$ 0.65
40	Machining		$ 0.04	Cm³	3			$ 0.12
50	Machining setup,		$ 0.65	unit	1			$ 0.65
60	Machining		$ 0.04	Cm³	1			$ 0.04
70	Machining setup,		$ 0.65	unit	1			$ 0.65
80	Machining		$ 0.04	Cm³	1			$ 0.04
90	Drilled holes < 25.4		$ 0.35	unit	4			$ 1.40
100	Threading, Internal (machining)		$ 0.10	Cm³	4			$ 0.40
							Sub Total	**$ 5.45**

ItemOrder	Fastener	Use	UnitCost	Size1	Unit1	Size2	Unit2	Quantity	Sub Total
10	Bolt, Grade 8.8 (SAE 5)		$ 0.01	3	mm	10	mm	4	$ 0.04
								Sub Total	**$ 0.04**

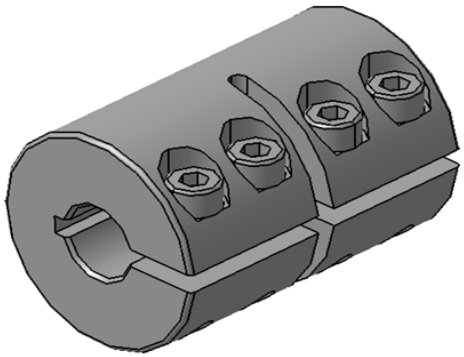

University	Ecole Centrale de Lyon			**Car #**	81	**Part Cost**	$ 40.00
System	Engine and Drivetrain	**FileLink1**				**Qty**	1
Assembly	Shifter	**FileLink2**		**FileLink1**			
Part	Engine gearbox actuator	**FileLink3**		**FileLink2**		**Extended Cos**	$ 40.00
P/N Base	FR 06007			**FileLink3**			
Suffix	AA						
Details							

ItemOrder	Material	Use	UnitCost	Size1	Unit1	Size2	Unit2	Area Name	Area	Length	Density	Quantity	Sub Total
10	Motor, 12 Volt, DC Brushless Servo	Gearbox actuator	$ 40.00									1.00	$ 40.00
												Sub Total	**$ 40.00**

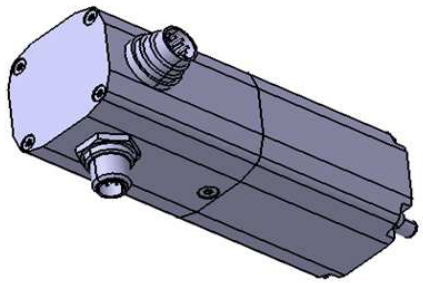

University	Ecole Centrale de Lyon			**Car #**	81	**Part Cost**	$ 2.43
System	Engine and Drivetrain	**FileLink1**				**Qty**	1
Assembly	Shifter	**FileLink2**		**FileLink1**			
Part	Engine gearbox actuator elastomer mount	**FileLink3**		**FileLink2**		**Extended Cos**	$ 2.43
P/N Base	FR 06008			**FileLink3**			
Suffix	AA						
Details	Bracket that maintains the gearbox actuator						

ItemOrder	Material	Use	UnitCost	Size1	Unit1	Size2	Unit2	Area Name	Area	Length	Density	Quantity	Sub Total
10	Mount, Vibration-Damping Sandwich		$ 2.43	9	mm							1.00	$ 2.43
												Sub Total	**$ 2.43**

University	Ecole Cenrale de Lyon	**Car #**	81	**Asm Cost**	464.42
System	Engine and Drivetrain			**Qty**	1
Assembly	Differential	**FileLink1**			
P/N Base	EN A0010	**FileLink2**		**Extended Cost**	$ 464.42
Suffix	AA	**FileLink3**			
Details	Differential housing and mounting assembly				

ItemOrder	Part	Part Cost	Quantity	Sub Total
10	Housing	$ 125.31	1	$ 125.31
20	Internals	$ 110.00	1	$ 110.00
30	Right Bearing Carrier	$ 42.18	1	$ 42.18
40	Left Bearing Carrier	$ 46.05	1	$ 46.05
50	Before Bearing Carrier Tab (Right and Left)	$ 0.72	4	$ 2.89
60	Behind Bearing Carrier Tab (Right and Left)	$ 0.72	4	$ 2.86
70	right eccentric	$ 24.32	1	$ 24.32
80	Left eccentric	$ 25.98	1	$ 25.98
			Sub Total	**$ 379.60**

ItemOrder	Material	Use	UnitCost	Size1	Unit1	Size2	Unit2	Area Name	Area	Length	Density	Quantity	Sub Total
10	Bearing, Double Row, Ball, Radial	Right differential bearing	$ 24.94	72	mm	12	mm					1.00	$ 24.94
20	Bearing, Double Row, Ball, Radial	Left differential bearing	$ 45.83	100	mm	21	mm					1.00	$ 45.83
30	Fluid, Oil	Differential oil	$ 0.75	0.06	liter							0.06	$ 0.05
												Sub Total	**$ 70.82**

ItemOrder	Process	Use	UnitCost	Unit	Quantity	Multiplier	Mult. Val.	Sub Total
10	Weld	Weld tabs to frame	$ 0.15	cm	15.8			$ 2.37
20	Aerosol Apply	Paint tabs	$ 5.25	m^2	0.004			$ 0.02
30	Assemble, 3 kg, Interference	Assemble the housing and the bearings	$ 0.56	unit	2			$ 1.12
40	Assemble, 1 kg, Interference	Assemble the left bearing and the left eccentric	$ 0.19	unit	1			$ 0.19
50	Assemble, 1 kg, Interference	Assemble the right bearing and the right eccentric	$ 0.19	unit	1			$ 0.19
60	Assemble, 1 kg, Interference	Assemble the bearing carriers and the bearings	$ 0.19	unit	2			$ 0.38
70	Assemble, 3 kg, Line-on-Line	Put the bearing carriers and tabs in place	$ 0.38	unit	2			$ 0.76
80	Assemble, 1kg, Loose	Put two washers on bolt	$ 0.06	unit	4			$ 0.24
90	Ratchet <= 6.35 mm	Bolt the left bearing carrier to tabs	$ 0.50	unit	2			$ 1.00
100	Reaction Tool <= 6.35 mm	Bolt the left bearing carrier to tabs	$ 0.25	unit	2			$ 0.50
110	Ratchet <= 25.4 mm	Bolt the right bearing carrier to tabs	$ 0.75	unit	2			$ 1.50
120	Reaction Tool <= 25.4 mm	Bolt the right bearing carrier to tabs	$ 0.25	unit	2			$ 0.50
							Sub Total	**$ 8.77**

ItemOrder	Fastener	Use	UnitCost	Size1	Unit1	Size2	Unit2	Quantity	Sub Total
10	Bolt, Grade 8.8 (SAE 5)	Assemble left bearing carrier and tabs	$ 0.16	8	mm	40	mm	2	$ 0.32
20	Nut, Grade 8.8 (SAE 5)	Assemble left bearing carrier and tabs	$ 0.04	8	mm			2	$ 0.08
30	Bolt, Grade 8.8 (SAE 5)	Blocking left bearing carrier and left	$ 0.16	6	mm	20	mm	2	$ 0.32
40	Nut, Grade 8.8 (SAE 5)	Blocking right bearing carrier and right eccentric	$ 0.04	6	mm			2	$ 0.08
50	Washer, Grade 8.8 (SAE 5)	Blocking eccentric	$ 0.01		unit			4	$ 0.04
60	Bolt, Grade 8.8 (SAE 5)	Assemble right bearing carrier and tabs	$ 0.16	8	mm			2	$ 0.32
70	Nut, Grade 8.8 (SAE 5)	Assemble right bearing carrier and tabs	$ 0.04	8	mm	35	mm	2	$ 0.08
								Sub Total	**$ 1.24**

ItemOrder	Tooling	Use	UnitCost	Unit	Quantity	PVF	FractionIncluded	Sub Total
10	Welds - Welding Fixture	Tabs	$ 500.00	point	3	3000	8	$ 4.00
							Sub Total	**$ 4.00**

University	Ecole Centrale de Lyon			**Car #**	81	**Part Cost**	$ 125.31
System	Engine and Drivetrain	**FileLink1**				**Qty**	1
Assembly	Differential	**FileLink2**		**FileLink1**			
Part	Housing	**FileLink3**		**FileLink2**		**Extended Cost**	$ 125.31
P/N Base	EN 10001			**FileLink3**			
Suffix	AA						
Details	Bought with the differential, cost as made						

ItemOrder	Material	Use	UnitCost	Size1	Unit1	Size2	Unit2	Area Name	Area	Length	Density	Quantity	Sub Total
10	Aluminium, Premium	Material for differential housing	$ 4.20					Round 102mm	8.17E-03	0.088	2 710	1	$ 8.19
20	Aluminium, Premium	Material for differential housing cover	$ 4.20					Round 102mm diam.	8.17E-03	0.065	2 710	1	$ 6.06
30	Aluminium, Premium	Material for differential cover	$ 4.20					Round 102mm diam.	8.17E-03	0.078	2 710	1	$ 7.23
40	Seal, O-ring, Elastomer		$ 0.05									2	$ 0.10
												Sub Total	**$ 21.58**

ItemOrder	Process	Use	UnitCost	Unit	Quantity	Multiplier	Mult. Val.	Sub Total
10	Machining Setup, Install and remove	Setup and removal of the machining of the differential housing	$ 1.30	unit	1			$ 1.30
20	Machining	Machining of the diffrential housing	$ 0.04	cm^3	623	Material - Aluminium	1	$ 24.94
30	Tapping holes	Tapped holes for the differential housing	$ 0.35	hole	24			$ 8.40
40	Tapping holes	Tapped holes for the drain screw of the differential housing	$ 0.35	hole	3			$ 1.05
50	Machining Setup, Install and remove	Setup and removal of the machining of the differential housing cover	$ 1.30	unit	1			$ 1.30
60	Machining	Machining of the diffrential housing cover	$ 0.04	cm^3	426	Material - Aluminium	1	$ 17.06
70	Drilled holles <25,4mm dia	hole for the differential housing cover	$ 0.35	hole	12			$ 4.20
80	Broach, External	Broach of the housing cover	$ 0.50	cm	3.5			$ 1.75
90	Machining Setup, Install and remove	Setup and removal of the machining	$ 0.35	unit	1			$ 0.35
100	Machining	Machining of the differential cover	$ 0.04	cm^3	538	Material - Aluminium	1	$ 21.53
110	Drilled holles <25,4mm dia	hole for the differential cover	$ 0.35	hole	12			$ 4.20
120	Assemble, 1 kg, Line-on-Line	Assemble the three parts and the two seals	$ 0.13	unit	2			$ 0.26
130	Ratchet <= 6.35 mm	Assemble the three parts	$ 0.50	unit	24			$ 12.00
140	Ratchet <= 25.4 mm	Bolt the drain screws to housing	$ 0.75	unit	3			$ 2.25
							Sub Total	**$ 100.59**

ItemOrder	Fastener	Use	UnitCost	Size1	Unit1	Size2	Unit2	Quantity	Sub Total
10	Bolt, Grade 12,9	Assemble of the three parts	$ 0.06	6	mm	14	mm	24	$ 1.44
20	Washer, Grade 12,9		$ 0.02		unit			24	$ 0.48
30	Bolt, Grade 10,9	Drain screw	$ 0.07	8	mm	8	mm	3	$ 0.21
40	Crush Washer	Copper washer for impermeability of the differential	$ 0.34	8	mm			3	$ 1.01
								Sub Total	**$ 3.14**

University	Ecole Centrale de Lyon			**Car #**	81	**Part Cost**	$ 110.00
System	Engine and Drivetrain	**FileLink1**				**Qty**	1
Assembly	Differential	**FileLink2**		**FileLink1**			
Part	Internals	**FileLink3**		**FileLink2**		**Extended Cost**	$ 110.00
P/N Base	EN 10002			**FileLink3**			
Suffix	AA						
Details	Bought with the differential						

ItemOrder	Material	Use	UnitCost	Size1	Unit1	Size2	Unit2	Area Name	Area	Length	Density	Quantity	Sub Total
10	Differential Internals, Limited Slip, Salisbury or Powerflow or Clutch Style	Limite Slip Differential	$ 110.00		unit							1	$ 110.00
												Sub Total	**$ 110.00**

University	Ecole Centrale de Lyon			**Car #**	81	**Part Cost**	$ 39.62
System	Engine and Drivetrain	**FileLink1**				**Qty**	1
Assembly	Differential	**FileLink2**		**FileLink1**			
Part	Right Bearing Carrier	**FileLink3**		**FileLink2**		**Extended Cost**	$ 39.62
P/N Base	EN 10003			**FileLink3**			
Suffix	AA						
Details							

ItemOrder	Material	Use	UnitCost	Size1	Unit1	Size2	Unit2	Area Name	Area	Length	Density	Quantity	Sub Total
10	Aluminium, Premium	Material for the right bearing carrier	$ 4.20	169	mm	19	mm	Rectangular area 146x19mm	3.21E-03	0.30	2 170.00	1	$ 8.78
												Sub Total	**$ 8.78**

ItemOrder	Process	Use	UnitCost	Unit	Quantity	Multiplier	Mult. Val.	Sub Total
10	Machining Setup, Install and remove	Setup and removal of the machining of the right bearing carrier	$ 1.30	unit	1			$ 1.30
20	Machining	Shaping of the differential bearing carrier	$ 0.04	cm^3	738	Material - Aluminium	1	$ 29.54
							Sub Total	**$ 30.84**

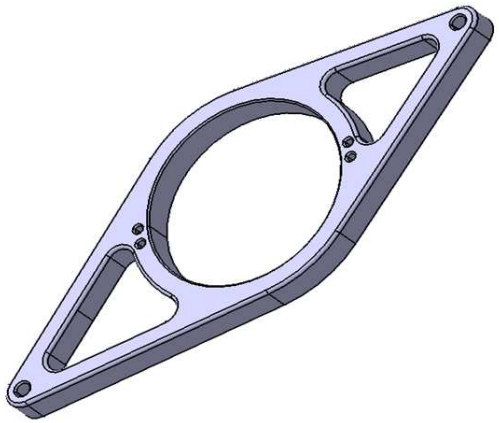

Chanfrein 1mm

Tolérances générales ISO 2768 - mK

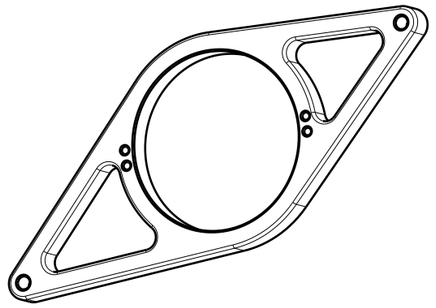

Vue isométrique
Echelle : 1:4

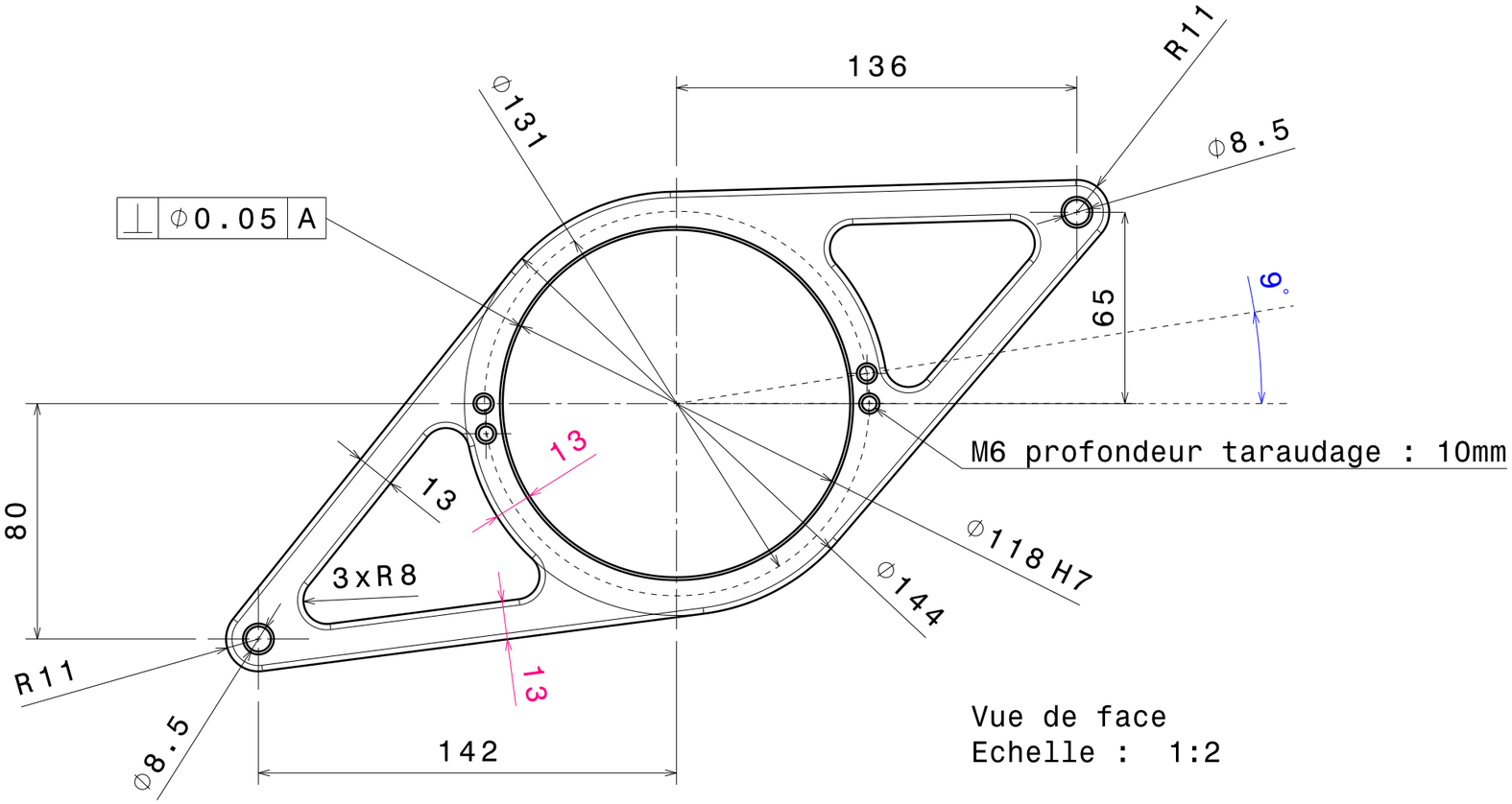

Vue de face
Echelle : 1:2

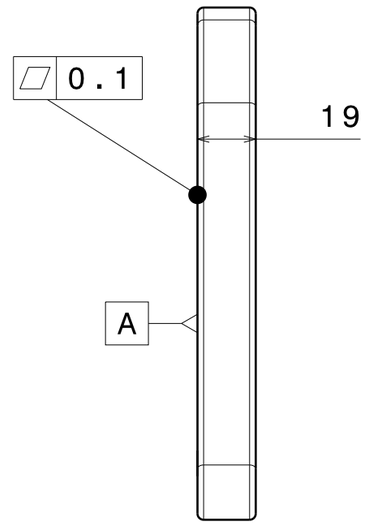

Vue de gauche
Echelle : 1:2

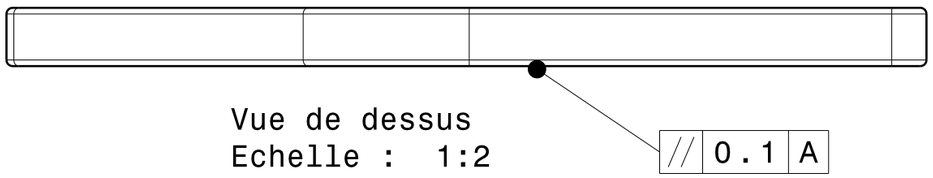

Vue de dessus
Echelle : 1:2

Taille A3		Ecurie Piston Sport Auto
Dessiné par Victor CADOR	Date 06/01/2015	Désignation: Porte excentrique droit
Coordonnées victor.cador@ecl13.ec-lyon.fr port. : 06 26 56 48 71		Quantité 1 / Matériau Aluminium 2017 / Version v1.0
Plan vérifié par PMR		Echelle 1:2 / Numéro du plan 15-B-085 / Feuille 1/1

University	Ecole Centrale de Lyon			**Car #**	81	**Part Cost**	$ 43.56
System	Engine and Drivetrain	**FileLink1**				**Qty**	1
Assembly	Differential	**FileLink2**		**FileLink1**			
Part	Left Bearing Carrier	**FileLink3**		**FileLink2**		**Extended Cost**	$ 43.56
P/N Base	EN 10004			**FileLink3**			
Suffix	AA						
Details							

ItemOrder	Material	Use	UnitCost	Size1	Unit1	Size2	Unit2	Area Name	Area	Length	Density	Quantity	Sub Total
10	Aluminium, Premium	Material for the right bearing carrier	$ 4.20	169	mm	21	mm	Rectangular area 146x19mm	3.55E-03	0.30	2 170.00	1	$ 9.70
												Sub Total	**$ 9.70**

ItemOrder	Process	Use	UnitCost	Unit	Quantity	Multiplier	Mult. Val.	Sub Total
10	Machining Setup, Install and remove	Setup and removal of the machining of the right bearing carrier	$ 1.30	unit	1			$ 1.30
20	Machining	Shaping of the differential bearing carrier	$ 0.04	cm^3	814	Material - Aluminium	1	$ 32.56
							Sub Total	**$ 33.86**

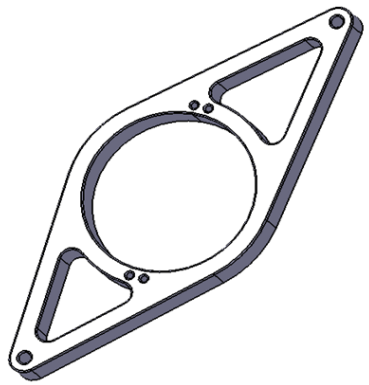

Chanfrein 1mm Tolérances générales ISO 2768 - mK

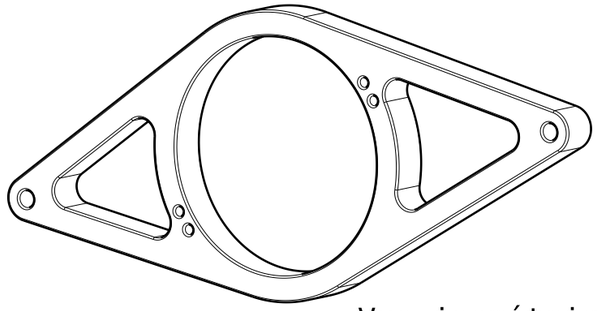

Vue isométrique
Echelle : 1:3

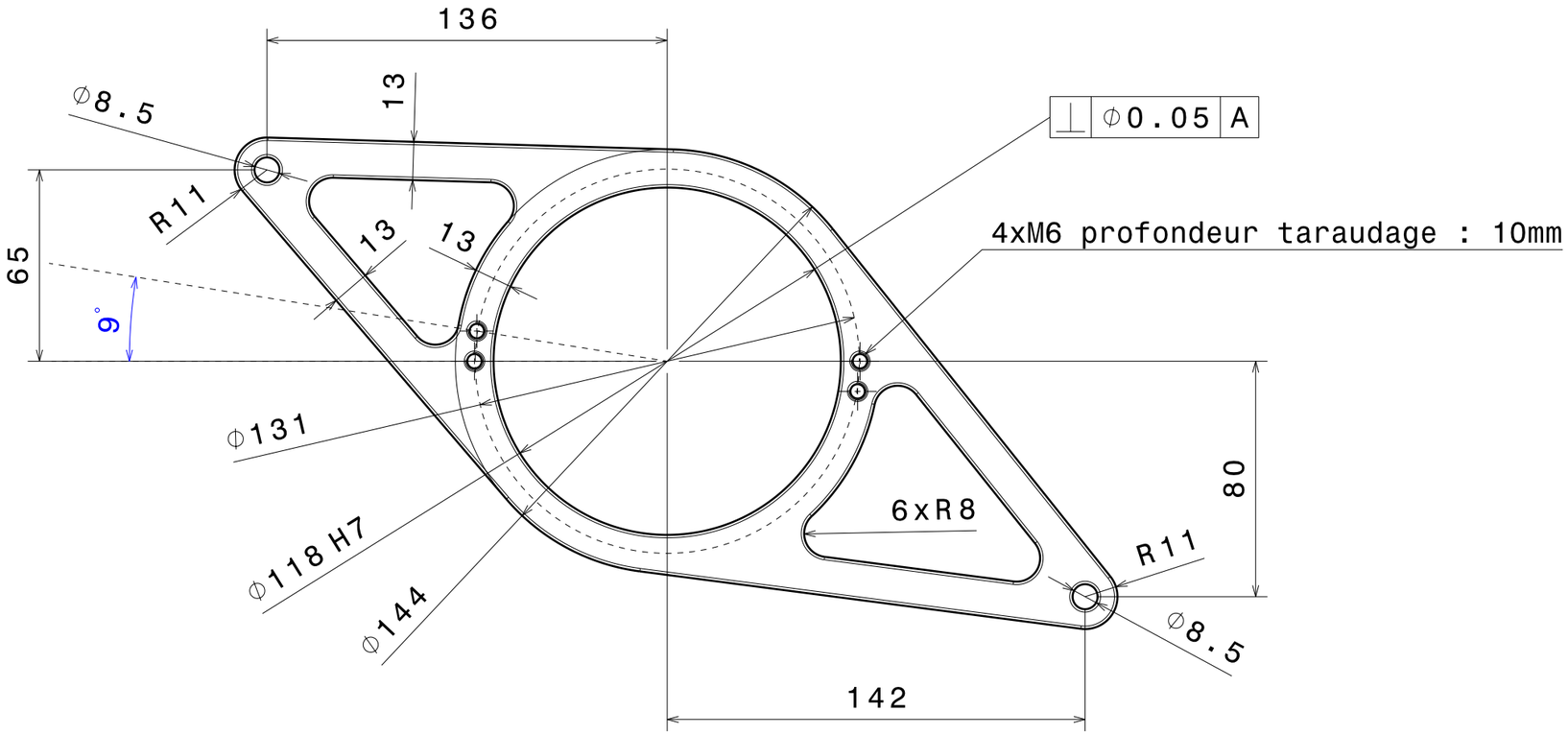

Vue de face
Echelle : 1:2

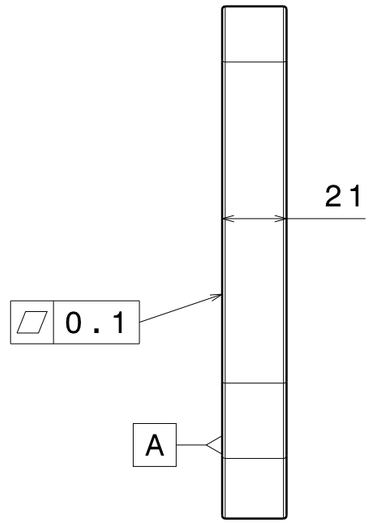

Vue de gauche
Echelle : 1:2

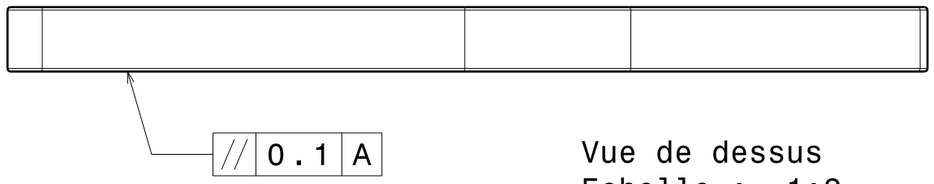

Vue de dessus
Echelle : 1:2

Taille A3		Ecurie Piston Sport Auto
Dessiné par Victor CADOR	Date 04/02/2015	Désignation: Porte excentrique gauche
Coordonnées: victor.cador@ecl13.ec-lyon.fr port. : 06 26 56 48 71		Quantité: 1 / Matériau: Aluminium 2017 / Version: V1.0
Plan vérifié par PMR		Echelle 1:2 / Numéro du plan 15-B-086 / Feuille 1/1

University	Ecole Centrale de Lyon			**Car #**	81	**Part Cost**	$ 0.72
System	Engine and Drivetrain	**FileLink1**				**Qty**	4
Assembly	Differential	**FileLink2**		**FileLink1**			
Part	Before Bearing Carrier Tab (Right and Left)	**FileLink3**		**FileLink2**		**Extended Cost**	$ 2.89
P/N Base	EN 10005			**FileLink3**			
Suffix	AA						
Details							

ItemOrder	Material	Use	UnitCost	Size1	Unit1	Size2	Unit2	Area Name	Area	Length	Density	Quantity	Sub Total
10	Steel, Mild	Material for the tab	$ 2.25	23	mm	3	mm	Rectangular area 20x3mm	6.90E-05	0.030	7 800.00	1	$ 0.04
												Sub Total	**$ 0.04**

ItemOrder	Process	Use	UnitCost	Unit	Quantity	Multiplier	Mult. Val.	Sub Total
10	Machining Setup, Install and remove	Setup for machining	$ 1.30	unit	1	single machine setup	0.25	$ 0.33
20	Laser Cut	Shaping of the tab and holes	$ 0.01	cm	12	Material, Steel	3	$ 0.36
							Sub Total	**$ 0.69**

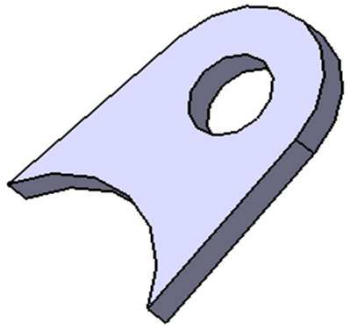

Tolérances générales : ISO 2768 mk

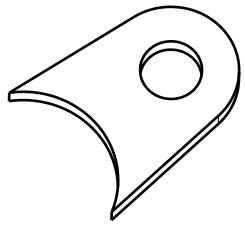

Vue isométrique
Echelle : 1:1

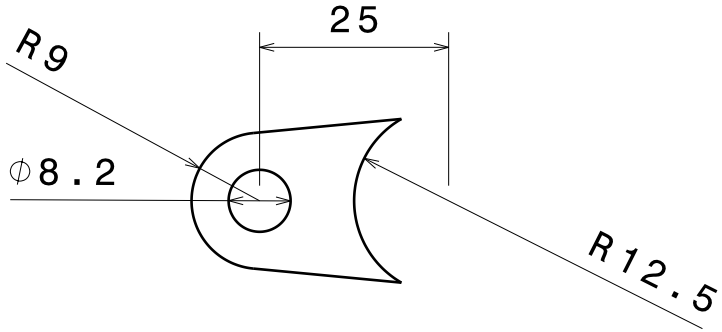

Vue de face
Echelle : 1:1

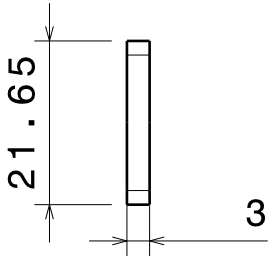

Vue de gauche
Echelle : 1:1

Taille A4		Ecurie Piston Sport Auto
Dessiné par Victor CADOR	Date 09/12/2014	Désignation: Chape porte exc. (⌀25)
Coordonnées tél. : 06 26 56 48 71 mail : victor.cador@ecl13.ec-lyon.fr		Quantité: 4 / Matériau: S 235 / Version: V1.0
Plan vérifié par Edgar Peirsegaele 172		Echelle 1:1 / Numéro du plan 15-M-037 / Feuille 1/1

University	Ecole Centrale de Lyon			**Car #**	81	**Part Cost**	$ 0.72
System	Engine and Drivetrain	**FileLink1**				**Qty**	4
Assembly	Differential	**FileLink2**		**FileLink1**			
Part	Behind Bearing Carrier Tab (Right and Left)	**FileLink3**		**FileLink2**		**Extended Cost**	$ 2.86
P/N Base	EN 10006			**FileLink3**			
Suffix	AA						
Details							

ItemOrder	Material	Use	UnitCost	Size1	Unit1	Size2	Unit2	Area Name	Area	Length	Density	Quantity	Sub Total
10	Steel, Mild	Material for the tab	$ 2.25	20	mm	3	mm	Rectangular area 20x3mm	6.00E-05	0.029	7 800.00	1	$ 0.03
												Sub Total	**$ 0.03**

ItemOrder	Process	Use	UnitCost	Unit	Quantity	Multiplier	Mult. Val.	Sub Total
10	Machining Setup, Install and remove	Setup for machining	$ 1.30	unit	1	single machine setup	0.25	$ 0.33
20	Laser Cut	Shaping of the tab and holes	$ 0.01	cm	12	Material, Steel	3	$ 0.36
							Sub Total	**$ 0.69**

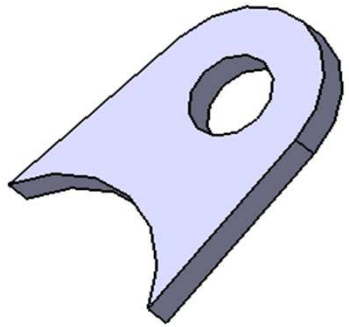

Tolérances générales : ISO 2768 mk

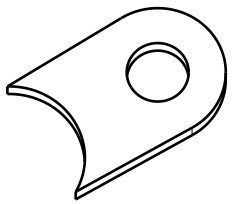

Vue isométrique
Echelle : 1:1

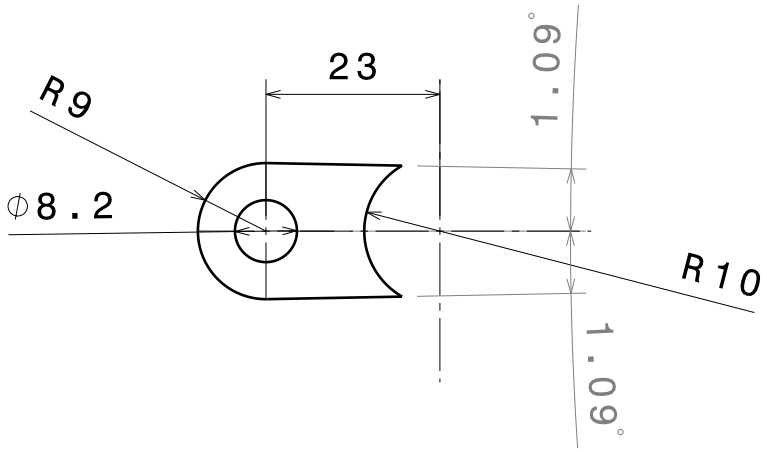

Vue de face
Echelle : 1:1

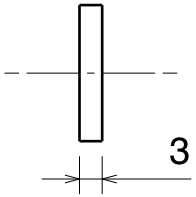

Vue de gauche
Echelle : 1:1

Taille A4		Ecurie Piston Sport Auto
Dessiné par Victor CADOR	Date 16/12/2014	Désignation: Chape porte exc. (⌀20.5)
Coordonnées tél. : 06 26 56 48 71 mail : victor.cador@ecl13.ec-lyon.fr		Quantité: 4 / Matériau: S 235 / Version: V1.0
Plan vérifié par Edgar Peirsegaele 174		Echelle 1:1 / Numéro du plan 15-M-038 / Feuille 1/1

University	Ecole Centrale de Lyon			**Car #**	81	**Part Cost**	$ 24.32
System	Engine and Drivetrain	**FileLink1**				**Qty**	1
Assembly	Differential	**FileLink2**		**FileLink1**			
Part	right eccentric	**FileLink3**		**FileLink2**		**Extended Cost**	$ 24.32
P/N Base	EN 10007			**FileLink3**			
Suffix	AA						
Details							

ItemOrder	Material	Use	UnitCost	Size1	Unit1	Size2	Unit2	Area Name	Area	Length	Density	Quantity	Sub Total
10	Plastic, Polyoxymethylene (POM)	Material for the right eccentric	$ 3.30					Round 146mm	1.67E-02	0.02	1 410.00	1	$ 1.87
												Sub Total	**$ 1.87**

ItemOrder	Process	Use	UnitCost	Unit	Quantity	Multiplier	Mult. Val.	Sub Total
10	Machining Setup, Install and remove	Setup and removal of the machining of the right eccentric	$ 1.30	unit	1			$ 1.30
20	Machining	Shaping side 1	$ 0.04	cm^3	141			$ 5.63
30	Machining Setup, Install and remove	Setup and removal of the machining of the right eccentric on the other side	$ 1.30	unit	1			$ 1.30
40	Machining	Shaping side 2	$ 0.04	cm^3	102			$ 4.07
50	Drilled holes < 25.4 mm dia.	Holes	$ 0.35	hole	29			$ 10.15
							Sub Total	**$ 22.45**

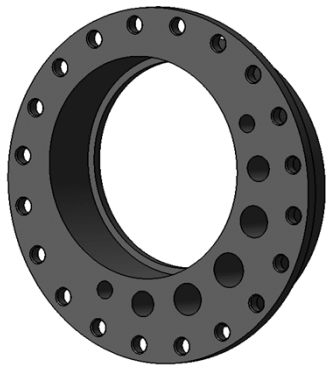

Tolérances générales ISO 2768-mk
"Casser les angles" Chanfreins : 1mm

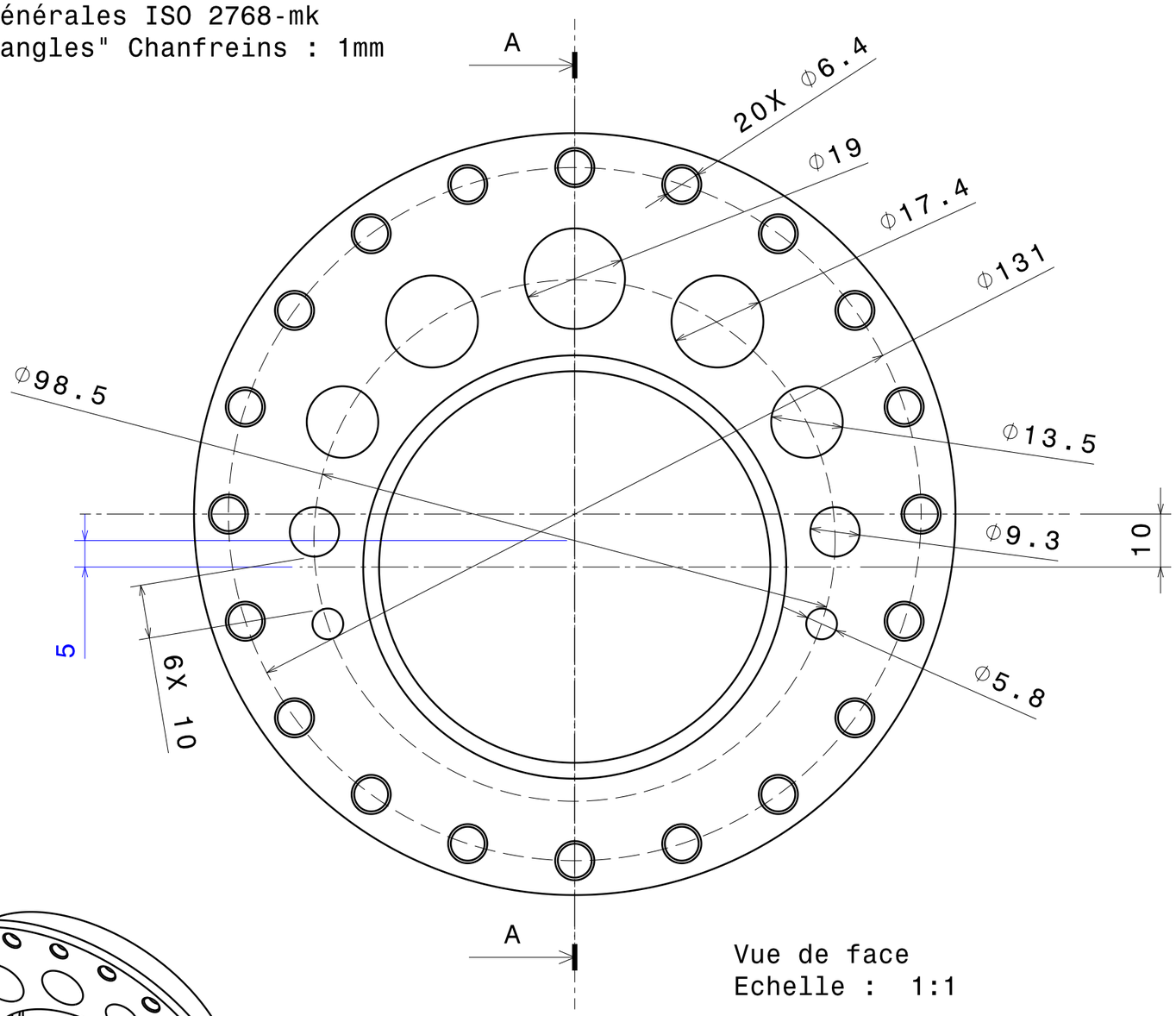

Vue de face
Echelle : 1:1

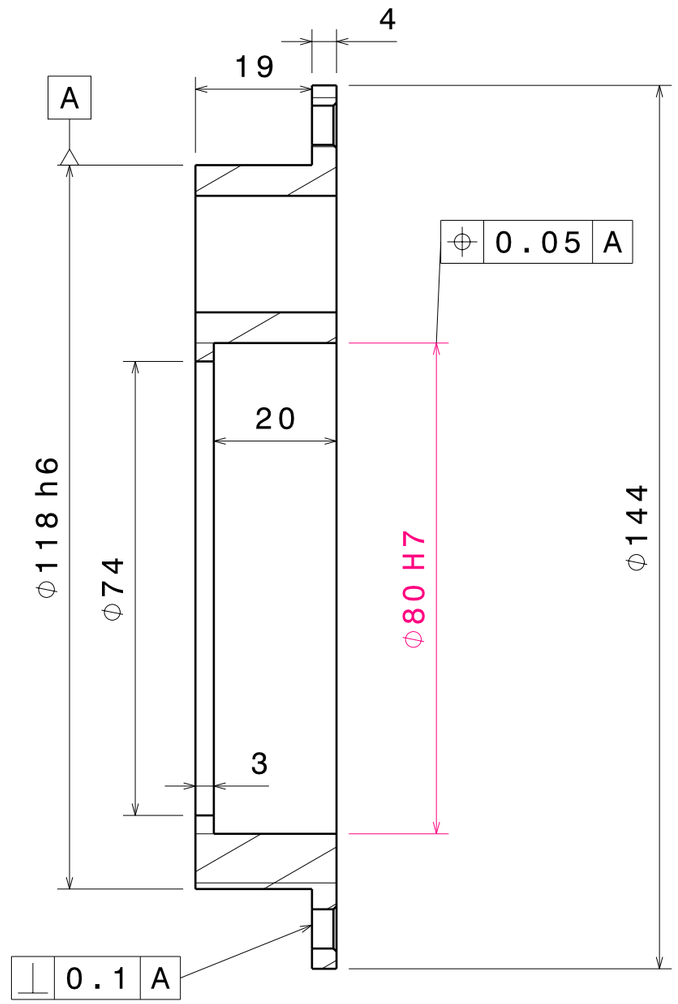

Coupe A-A
Echelle : 1:1

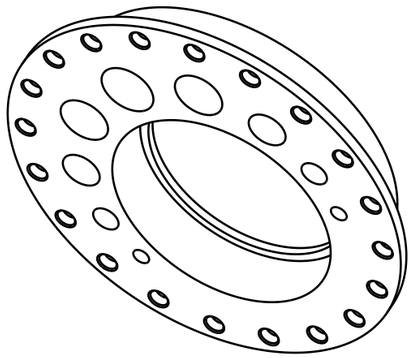

Vue isométrique
Echelle : 1:2

Taille A3		Ecurie Piston Sport Auto
Dessiné par Victor CADOR	Date 04/02/2015	Désignation Excentrique droit Delrin
Coordonnées victor.cador@ecl13.ec-lyon.fr port. : 06 26 56 48 71		Quantité 1 / Matériau Plastique Delrin / Version V1.0
Plan vérifié par PMR		Echelle 1:1 / Numéro du plan 15-B-081 / Feuille 1/1

University	Ecole Centrale de Lyon			**Car #**	81	**Part Cost**	$ 25.98
System	Engine and Drivetrain	**FileLink1**				**Qty**	1
Assembly	Differential	**FileLink2**		**FileLink1**			
Part	Left eccentric	**FileLink3**		**FileLink2**		**Extended Cost**	$ 25.98
P/N Base	EN 10008			**FileLink3**			
Suffix	AA						
Details							

ItemOrder	Material	Use	UnitCost	Size1	Unit1	Size2	Unit2	Area Name	Area	Length	Density	Quantity	Sub Total
10	Plastic, Polyoxymethylene (POM)	Material for the right eccentric	$ 3.30					Round 146mm	1.67E-02	0.03	1 410.00	1	$ 2.03
												Sub Total	**$ 2.03**

ItemOrder	Process	Use	UnitCost	Unit	Quantity	Multiplier	Mult. Val.	Sub Total
10	Machining Setup, Install and remove	Setup and removal of the machining of the right eccentric	$ 1.30	unit	1			$ 1.30
20	Machining	Shaping side 1	$ 0.04	cm^3	184			$ 7.37
30	Machining Setup, Install and remove	Setup and removal of the machining of the right eccentric on the other side	$ 1.30	unit	1			$ 1.30
40	Machining	Shaping side 2	$ 0.04	cm^3	113			$ 4.53
50	Drilled holes < 25.4 mm dia.	Holes	$ 0.35	hole	27			$ 9.45
							Sub Total	**$ 23.95**

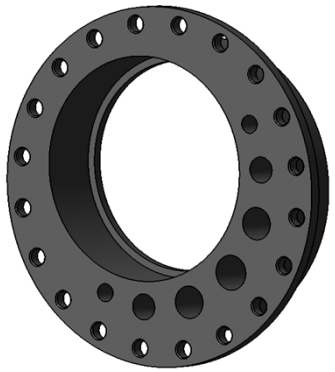

Tolérances générales ISO 2768-mk
"Casser les angles" Chanfreins : 1mm

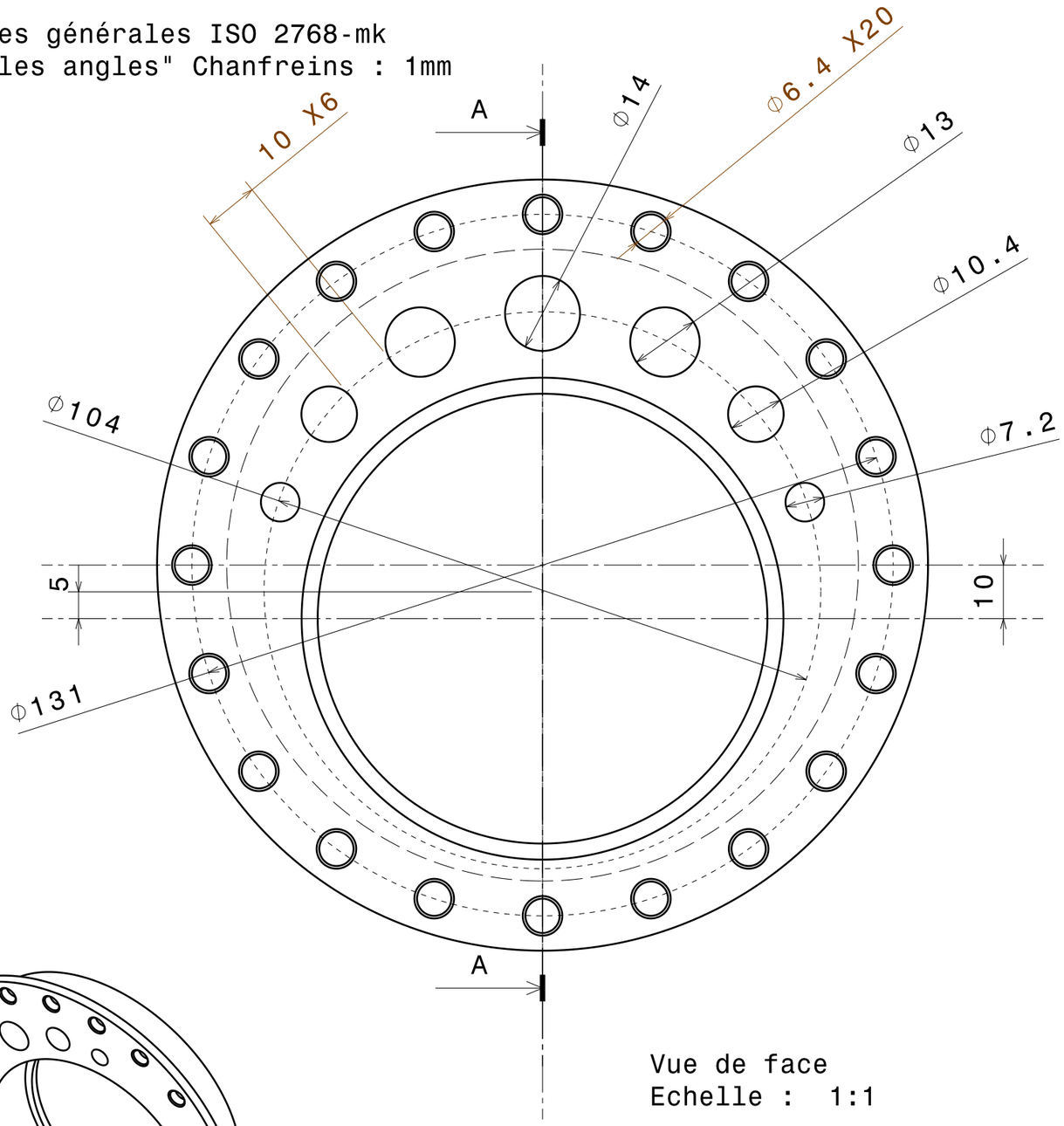

Vue de face
Echelle : 1:1

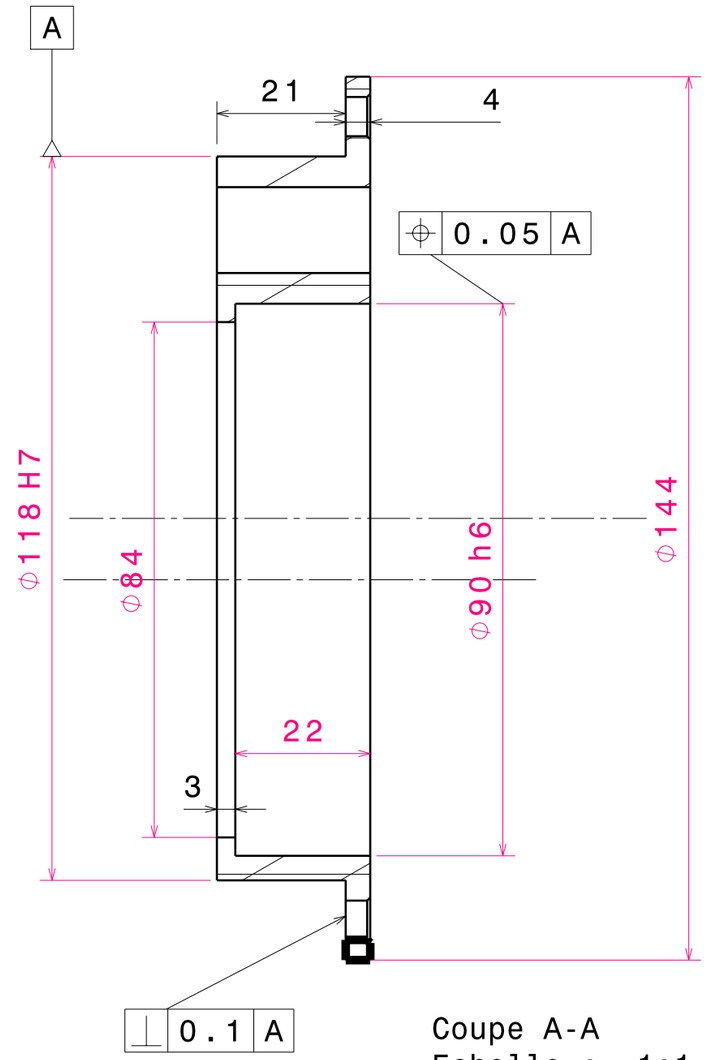

Coupe A-A
Echelle : 1:1

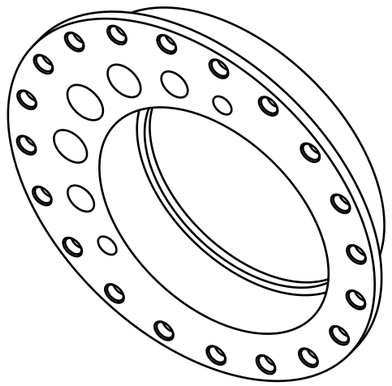

Vue isométrique
Echelle : 1:2

Taille A3		Ecurie Piston Sport Auto
Dessiné par Victor CADOR	Date 03/02/2015	Désignation Excentrique gauche Delrin
Coordonnées victor.cador@ecl13.ec-lyon.fr tel. : 06 26 56 48 71		Quantité 1 / Matériau Plastique Delrin / Version V1.0
Plan vérifié par PMR		Echelle 1:1 / Numéro du plan 15-B-082 / Feuille 1/1

University	Ecole Cenrale de Lyon	**Car #**	81	**Asm Cost**	563.73
System	Engine and Drivetrain			**Qty**	1
Assembly	Driveshaft	**FileLink1**			
P/N Base	EN A0011	**FileLink2**		**Extended Cost**	$ 563.73
Suffix	AA	**FileLink3**			
Details					

ItemOrder	Part	Part Cost	Quantity	Sub Total
10	Inboard tripod housing	$ 67.72	2	$ 135.44
20	Outboard tripod housing	$ 77.69	2	$ 155.37
30	Right axle	$ 20.31	1	$ 20.31
40	Left axle	$ 20.31	1	$ 20.31
			Sub Total	**$ 331.43**

ItemOrder	Material	Use	UnitCost	Size1	Unit1	Size2	Unit2	Area Name	Area	Length	Density	Quantity	Sub Total
10	Constant Velocity Joint, Tripod	Tripod for driveshaft	$ 45.00		unit							4.00	$ 180.00
20	Constant Velocity Joint, Boot	Boot for driveshaft	$ 5.00		unit							4.00	$ 20.00
												Sub Total	**$ 200.00**

ItemOrder	Process	Use	UnitCost	Unit	Quantity	Multiplier	Mult. Val.	Sub Total
10	Assemble, 3 kg, Interference	Assemble a tripod housing and the differential	$ 0.56	unit	2			$ 1.12
20	Wrench <= 25.4 mm	Fasten the differential and a tripod housing	$ 1.50	unit	2			$ 3.00
30	Assemble, 1 kg, Interference	Assemble a boot and an axle	$ 0.19	unit	4			$ 0.76
40	Assemble, 1 kg, Interference	Assemble an axle and a snap ring	$ 0.19	unit	4			$ 0.76
50	Assemble, 1 kg, Line-on-Line	Assemble a tripod and an axle	$ 0.13	unit	4			$ 0.52
60	Assemble, 1 kg, Interference	Assemble an axle and a snap ring	$ 0.19	unit	4			$ 0.76
70	Assemble, 3 kg, Loose	Assemble an axle and a tripod housing	$ 0.19	unit	4			$ 0.76
80	Assemble, 1 kg, Interference	Assemble a boot and an tripod housing	$ 0.19	unit	4			$ 0.76
90	Assemble, 3 kg, Interference	Assemble a tripod housing and a hub	$ 0.56	unit	2			$ 1.12
100	Assemble, 3 kg, Interference	Assemble a tripod housing and a hub	$ 0.56	unit	2			$ 1.12
110	Assemble, 3 kg, Interference	Assemble a hose clamp and an axle	$ 0.56	unit	2			$ 1.12
120	Assemble, 3 kg, Interference	Assemble a hose clamp and an tripod housing	$ 0.56	unit	2			$ 1.12
130	Wrench <= 25.4 mm	Bolt tripod housing to hub	$ 1.50	unit	2			$ 3.00
							Sub Total	**$ 15.92**

ItemOrder	Fastener	Use	UnitCost	Size1	Unit1	Size2	Unit2	Quantity	Sub Total
10	Retaining Ring, R-ring	Snap ring for retaining tripods	$ 0.09	20	mm			8	$ 0.72
20	Hose Clamp, Spring Steel	fasten the boot	$ 0.92	65.5	mm			2	$ 1.84
30	Hose Clamp, Spring Steel	fasten the boot	$ 0.28	20	mm			2	$ 0.56
40	Bolt, Grade 8.8 (SAE 5)	Assemble the tripod housings and the differential	$ 0.08	8	mm	20	mm	2	$ 0.16
50	Nut, Grade NAS 6-Point	Fasten the tripod housing and the hub	$ 6.55	20	mm			2	$ 13.10
								Sub Total	**$ 16.38**

University	Ecole Centrale de Lyon			**Car #**	81	**Part Cost**	$ 67.72
System	Engine and Drivetrain	**FileLink1**				**Qty**	2
Assembly	Driveshaft	**FileLink2**		**FileLink1**			
Part	Inboard tripod housing	**FileLink3**		**FileLink2**		**Extended Cost**	$ 135.44
P/N Base	EN 11001			**FileLink3**			
Suffix	AA						
Details							

ItemOrder	Material	Use	UnitCost	Size1	Unit1	Size2	Unit2	Area Name	Area	Length	Density	Quantity	Sub Total
10	Steel, Alloy	Material for the inboard tripod housing	$ 2.25					Round 65,5mm diam.	0.00337	0.16	8 010.00	1.00	$ 9.53
												Sub Total	**$ 9.53**

ItemOrder	Process	Use	UnitCost	Unit	Quantity	Multiplier	Mult. Val.	Sub Total
10	Machining Setup, Install and remove	Setup and removal of the machining of the tripod housing	$ 1.30	unit	1			$ 1.30
20	Machining	Shaping of the tripod housing	$ 0.04	cm^3	453	Material-Steel	3	$ 54.36
30	Machining Setup, Install and remove	Setup and removal of the broach of the tripod housing	$ 1.30	unit	1			$ 1.30
40	Broach, External	Broach of the tripod housing	$ 0.50	cm	2.45			$ 1.23
							Sub Total	**$ 58.19**

University	Ecole Centrale de Lyon			**Car #**	81	**Part Cost**	$ 77.69
System	Engine and Drivetrain	**FileLink1**				**Qty**	2
Assembly	Driveshaft	**FileLink2**		**FileLink1**			
Part	Outboard tripod housing	**FileLink3**		**FileLink2**		**Extended Cost**	$ 155.37
P/N Base	EN 11002			**FileLink3**			
Suffix	AA						
Details	Bought						

ItemOrder	Material	Use	UnitCost	Size1	Unit1	Size2	Unit2	Area Name	Area	Length	Density	Quantity	Sub Total
10	Steel, Alloy	Material for the tripod housing	$ 2.25					Round 65,5mm diam.	0.00337	0.17	8 010.00	1	$ 10.32
												Sub Total	**$ 10.32**

ItemOrder	Process	Use	UnitCost	Unit	Quantity	Multiplier	Mult. Val.	Sub Total
10	Machining Setup, Install and remove	Setup and removal of the machining of the tripod housing	$ 1.30	unit	1			$ 1.30
20	Machining	Shaping of the tripod housing	$ 0.04	cm^3	504	Material-Steel	3	$ 60.42
30	Machining Setup, Install and remove	Setup and removal of the broach of the tripod housing	$ 1.30	unit	1			$ 1.30
40	Broach, External	Broach of the tripod housing	$ 0.50	cm	5.7			$ 2.85
50	Machining Setup, Install and remove	Setup and removal of the threading of the tripod housing	$ 1.30	unit	1			$ 1.30
60	Threading, External (machining)	Threading of the tripod housing	$ 0.10	cm	1.9			$ 0.19
							Sub Total	**$ 67.36**

University	Ecole Centrale de Lyon			**Car #**	81	**Part Cost**	$ 20.31
System	Engine and Drivetrain	**FileLink1**				**Qty**	1
Assembly	Driveshaft	**FileLink2**		**FileLink1**			
Part	Right axle	**FileLink3**		**FileLink2**		**Extended Cost**	$ 20.31
P/N Base	EN 11003			**FileLink3**			
Suffix	AA						
Details							

ItemOrder	Material	Use	UnitCost	Size1	Unit1	Size2	Unit2	Area Name	Area	Length	Density	Quantity	Sub Total
10	Steel, Alloy	Material for driveshaft axle	$ 2.25					24mm diam.	0.00045	0.34	8 010.00	1	$ 2.77
												Sub Total	**$ 2.77**

ItemOrder	Process	Use	UnitCost	Unit	Quantity	Multiplier	Mult. Val.	Sub Total
10	Machining Setup, Install and remove	Setup and removal of the machining of the axle	$ 1.30	unit	1			$ 1.30
20	Machining	Shaping of the axle	$ 0.04	cm^3	80.3	Material-Steel	3	$ 9.64
30	Machining Setup, Install and remove	Setup and removal of the broach of the axle	$ 1.30	unit	1			$ 1.30
40	Broach, External	Broach of the axle	$ 0.50	cm	10.6			$ 5.30
							Sub Total	**$ 17.54**

University	Ecole Centrale de Lyon			**Car #**	81	**Part Cost**	$ 20.31
System	Engine and Drivetrain	**FileLink1**				**Qty**	1
Assembly	Driveshaft	**FileLink2**		**FileLink1**			
Part	Left axle	**FileLink3**		**FileLink2**		**Extended Cost**	$ 20.31
P/N Base	EN 11004			**FileLink3**			
Suffix	AA						
Details							

ItemOrder	Material	Use	UnitCost	Size1	Unit1	Size2	Unit2	Area Name	Area	Length	Density	Quantity	Sub Total
10	Steel, Alloy	Material for driveshaft axle	$ 2.25					Round 24mm diam.	0.00045	0.34	8 010.00	1	$ 2.77
												Sub Total	**$ 2.77**

ItemOrder	Process	Use	UnitCost	Unit	Quantity	Multiplier	Mult. Val.	Sub Total
10	Machining Setup, Install and remove	Setup and removal of the machining of the axle	$ 1.30	unit	1			$ 1.30
20	Machining	Shaping of the axle	$ 0.04	cm^3	80.3	Material-Steel	3	$ 9.64
30	Machining Setup, Install and remove	Setup and removal of the broach of the axle	$ 1.30	unit	1			$ 1.30
40	Broach, External	Broach of the axle	$ 0.50	cm	10.6			$ 5.30
							Sub Total	**$ 17.54**

University	Ecole Cenrale de Lyon	**Car #**	81	**Asm Cost**	130.29
System	Engine and Drivetrain			**Qty**	1
Assembly	chain set	**FileLink1**			
P/N Base	EN A0012	**FileLink2**		**Extended Cost**	$ 130.29
Suffix	AA	**FileLink3**			
Details					

ItemOrder	Part	Part Cost	Quantity	Sub Total
10	Front sprocket	$ 12.59	1	$ 12.59
20	Rear sprocket	$ 14.02	1	$ 14.02
30	Rear sprocket adapter	$ 23.16	1	$ 23.16
40	chain shield	$ 8.06	1	$ 8.06
50	tab	$ 1.56	1	$ 1.56
60	centering pin	$ 1.43	5	$ 7.14
			Sub Total	**$ 57.83**

ItemOrder	Material	Use	UnitCost	Size1	Unit1	Size2	Unit2	Area Name	Area	Length	Density	Quantity	Sub Total
10	Chain		$ 0.05	1040	mm							1040.00	$ 52.00
												Sub Total	**$ 52.00**

ItemOrder	Process	Use	UnitCost	Unit	Quantity	Multiplier	Mult. Val.	Sub Total
10	Weld	Weld tab to frame	$ 0.15	cm	2			$ 0.30
20	Assemble, 3 kg, Interference	Put the rear sprocket adapter on the differential	$ 0.56	unit	1			$ 0.56
30	Assemble, 1 kg, Interference	Put the centering pin in the rear sprocket adapter	$ 0.19	unit	5			$ 0.95
40	Assemble, 1 kg, Interference	Put the retaining ring in the groove	$ 0.19	unit	1			$ 0.19
50	Assemble, 1 kg, Loose	Place bolts and washers	$ 0.06	unit	15			$ 0.90
60	Ratchet <= 25.4 mm	Bolt rear sprocket to adapter	$ 0.75	unit	5			$ 3.75
70	Reaction Tool <= 25.4 mm	Bolt rear sprocket to adapter	$ 0.25	unit	5			$ 1.25
80	Assemble, 1 kg, Interference	Put the front sprocket in place	$ 0.19	unit	1			$ 0.19
90	Ratchet <= 25.4 mm	Bolt front sprocket to engine	$ 0.75	unit	1			$ 0.75
100	Assemble, 5 kg, Line-on-Line	Put chain in place	$ 0.63	unit	1			$ 0.63
110	Adjustment - Misc.	Chain tension	$ 5.00	unit	1			$ 5.00
120	Assemble, 1 kg, Loose	Place bolts and washers	$ 0.06	unit	3			$ 0.18
130	Ratchet <= 25.4 mm	Bolt upper chain shield to tab	$ 0.75	unit	1			$ 0.75
140	Reaction Tool <= 25.4 mm	Bolt upper chain shield to tab	$ 0.25	unit	1			$ 0.25
150	Assemble, 1 kg, Loose	Place bolts and washers	$ 0.06	unit	3			$ 0.18
160	Ratchet <= 25.4 mm	Bolt chain shield to engine	$ 0.75	unit	1			$ 0.75
170	Reaction Tool <= 25.4 mm	Bolt chain shield to engine	$ 0.25	unit	1			$ 0.25
							Sub Total	**$ 16.83**

ItemOrder	Fastener	Use	UnitCost	Size1	Unit1	Size2	Unit2	Quantity	Sub Total
10	Bolt, Grade 8.8 (SAE 5)	Assemble the rear sprocket with the adapter	$ 0.34	6	mm	30	mm	5	$ 1.70
20	Nut, Grade 8.8 (SAE 5)	Assemble the rear sprocket with the adapter	$ 0.07	6	mm			5	$ 0.35
30	Washer, Grade 8.8 (SAE 5)	Assemble the rear sprocket with the adapter	$ 0.01		unit			10	$ 0.10
40	Bolt, Grade 8.8 (SAE 5)	Assemble the chain shield with the tab	$ 0.08	6	mm	20	mm	1	$ 0.08
50	Nut, Grade 8.8 (SAE 5)	Assemble the chain shield with the tab	$ 0.04	6	mm			1	$ 0.04
60	Washer, Grade 8.8 (SAE 5)	Assemble the chain shield with the tab	$ 0.01		unit			2	$ 0.02

70	Bolt, Grade 8.8 (SAE 5)	Assemble the chain shield with the engine	$ 0.04	6	mm	20	mm	1	$ 0.04
80	Nut, Grade 8.8 (SAE 5)	Assemble the chain shield with the engine	$ 0.03	6	mm			1	$ 0.03
90	Washer, Grade 8.8 (SAE 5)	Assemble the chain shield with the engine	$ 0.01		unit			2	$ 0.02
100	Bolt, Grade 8.8 (SAE 5)	Assemble the front sprocket with the engine	$ 0.08	8	mm	20	mm	1	$ 0.08
110	Retaining Ring, External	Hold the rear sprocket adapter in place on the differential	$ 0.50	52	mm			1	$ 0.50
								Sub Total	**$ 2.96**

ItemOrder	Tooling	Use	UnitCost	Unit	Quantity	PVF	FractionIncluded	Sub Total
10	Welds - Welding Fixture	Tabs	$ 500.00	point	2	3000	2	$ 0.67
							Sub Total	**$ 0.67**

University	Ecole Centrale de Lyon			**Car #**	81	**Part Cost**	$ 12.59
System	Engine and Drivetrain	**FileLink1**				**Qty**	1
Assembly	chain set	**FileLink2**		**FileLink1**			
Part	Front sprocket	**FileLink3**		**FileLink2**		**Extended Cost**	$ 12.59
P/N Base	EN 12001			**FileLink3**			
Suffix	AA						
Details	bought						

ItemOrder	Material	Use	UnitCost	Size1	Unit1	Size2	Unit2	Area Name	Area	Length	Density	Quantity	Sub Total
10	Steel, Mild	Material for front sprocket	$ 2.25					Round 76mm	4.54E-03	0.020	7 800	1.00	$ 1.59
												Sub Total	**$ 1.59**

ItemOrder	Process	Use	UnitCost	Unit	Quantity	Multiplier	Mult. Val.	Sub Total
10	Machining Setup, Install and remove	Setup and removal of the machining of the sprocket	$ 1.30	unit	1			$ 1.30
20	Machining	Shaping of the sprocket	$ 0.04	cm^3	62.99	Material-steel	3	$ 7.56
30	Machinig Setup, Install and remove	Setup and removal of the broach of the sprocket	$ 1.30	unit	1			$ 1.30
40	Broach, Internal	Broach of the sprocket	$ 0.50	cm	1.68			$ 0.84
							Sub Total	**$ 11.00**

University	Ecole Centrale de Lyon			**Car #**	81	**Part Cost**	$ 14.02
System	Engine and Drivetrain	**FileLink1**				**Qty**	1
Assembly	chain set	**FileLink2**		**FileLink1**			
Part	Rear sprocket	**FileLink3**		**FileLink2**		**Extended Cost**	$ 14.02
P/N Base	EN 12002			**FileLink3**			
Suffix	AA						
Details							

ItemOrder	Material	Use	UnitCost	Size1	Unit1	Size2	Unit2	Area Name	Area	Length	Density	Quantity	Sub Total
10	Steel, Mild	Material for the rear sprocket	$ 2.25					Round 210mm	0.03464	0.01	7 800.00	1	$ 3.04
												Sub Total	**$ 3.04**

ItemOrder	Process	Use	UnitCost	Unit	Quantity	Multiplier	Mult. Val.	Sub Total
10	Machining Setup, Install and remove	Setup and removal of the machining of the sprocket	$ 1.30	unit	1			$ 1.30
20	Machining	Shaping of the sprocket	$ 0.04	cm^3	81	Material-Steel	3	$ 9.68
							Sub Total	**$ 10.98**

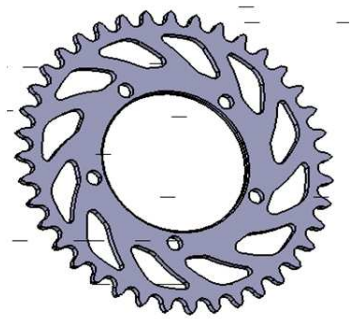

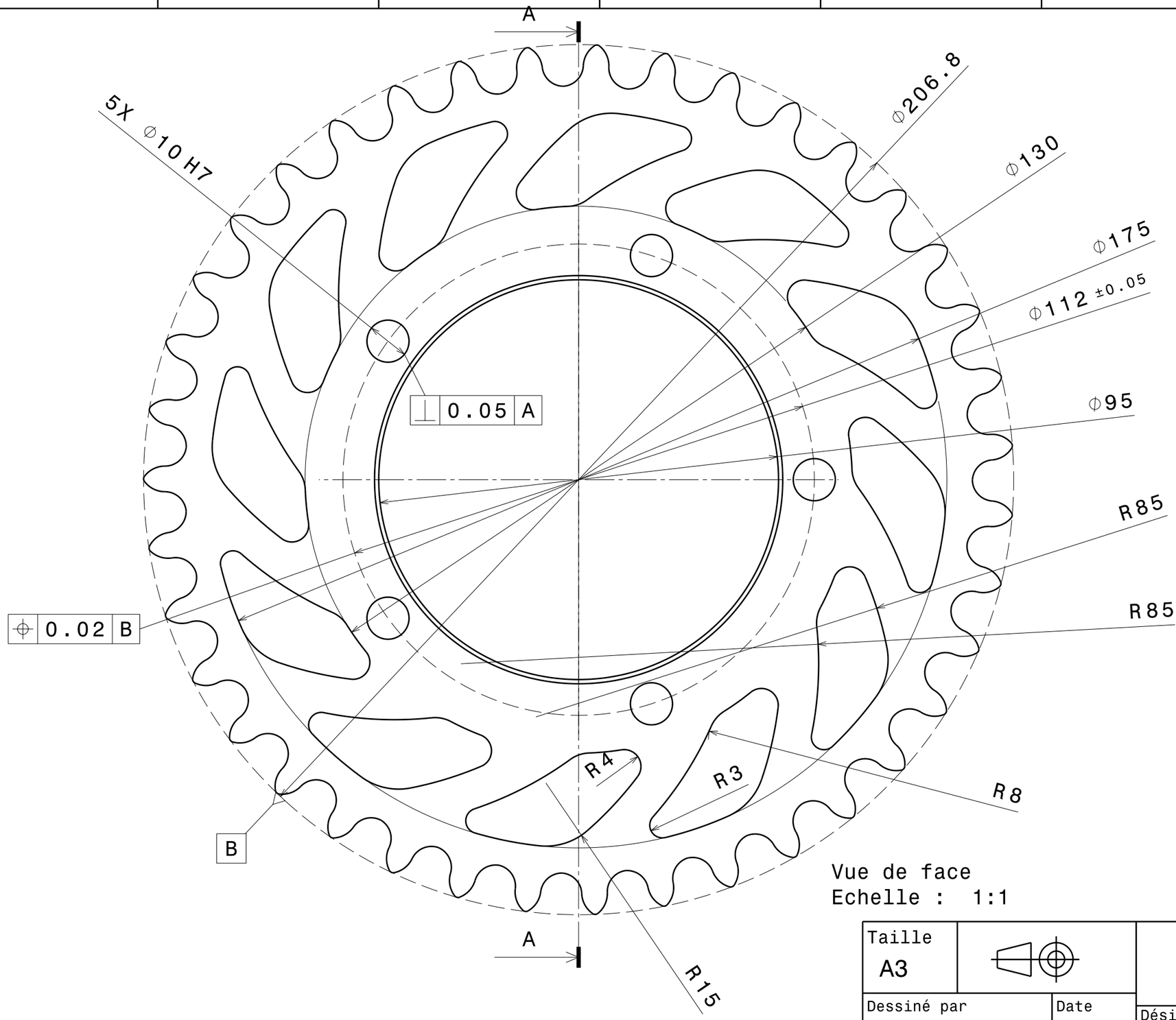

Vue de face
Echelle : 1:1

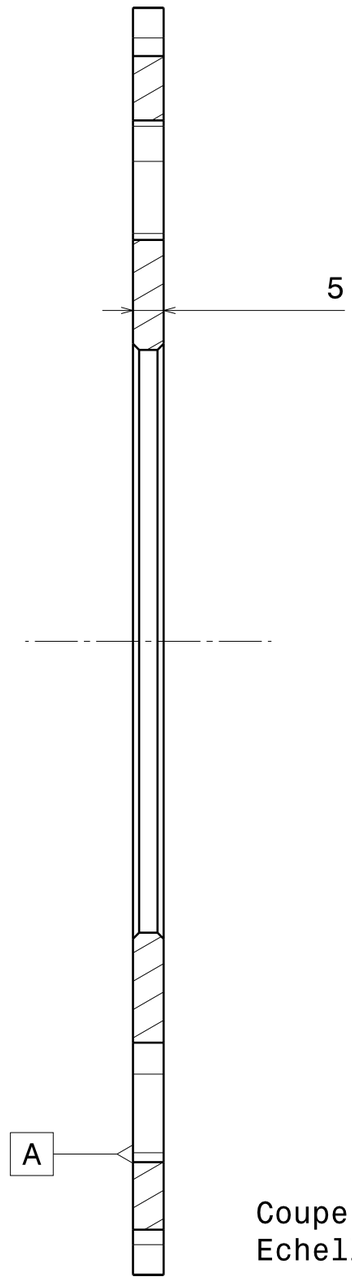

Coupe A-A
Echelle : 1:1

Taille A3		Ecurie Piston Sport Auto
Dessiné par Victor CADOR	Date 09/02/2015	Désignation Couronne
Coordonnées victor.cador@ecl13.ec-lyon.fr port. : 06 26 56 48 71		Quantité 1 / Matériau Acier (fourni) / Version V0.1
Plan vérifié par XXX		Echelle 1:1 / Numéro du plan 15-B-082 / Feuille 1/1

University	Ecole Centrale de Lyon			**Car #**	81	**Part Cost**	$ 23.16
System	Engine and Drivetrain	**FileLink1**				**Qty**	1
Assembly	chain set	**FileLink2**		**FileLink1**			
Part	Rear sprocket adapter	**FileLink3**		**FileLink2**		**Extended Cost**	$ 23.16
P/N Base	EN 12003			**FileLink3**			
Suffix	AA						
Details							

ItemOrder	Material	Use	UnitCost	Size1	Unit1	Size2	Unit2	Area Name	Area	Length	Density	Quantity	Sub Total
10	Aluminium, Premium	Material for the adapter	$ 4.20					Round 132mm	1.37E-02	0.03	2 710.00	1	$ 4.52
												Sub Total	**$ 4.52**

ItemOrder	Process	Use	UnitCost	Unit	Quantity	Multiplier	Mult. Val.	Sub Total
10	Machining Setup, Install and remove	Setup and removal of the machining of the adapter	$ 1.30	unit	1			$ 1.30
20	Machining	Shaping of the adapter	$ 0.04	cm^3	280			$ 11.19
50	Drilled holes < 25.4 mm dia.	Hole for the rear sprocket	$ 0.35	hole	5			$ 1.75
60	Drilled holes < 25.4 mm dia.	Hole for the rear sprocket	$ 0.35	hole	5			$ 1.75
70	Machinig Setup, Install and remove	Setup and removal of the broach of the adapter	$ 1.30	unit	1			$ 1.30
80	Broach, Internal	Broach of the adapter	$ 0.50	cm	2.7			$ 1.35
							Sub Total	**$ 18.64**

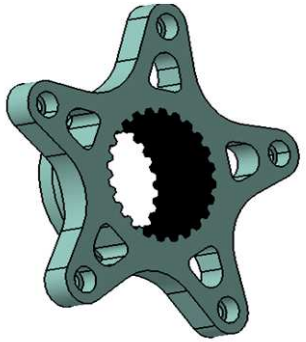

Brut déjà cannelé fourni
Norme ISO 2768-mk
Casser les angles (congé ou chanfrein) : 1mm

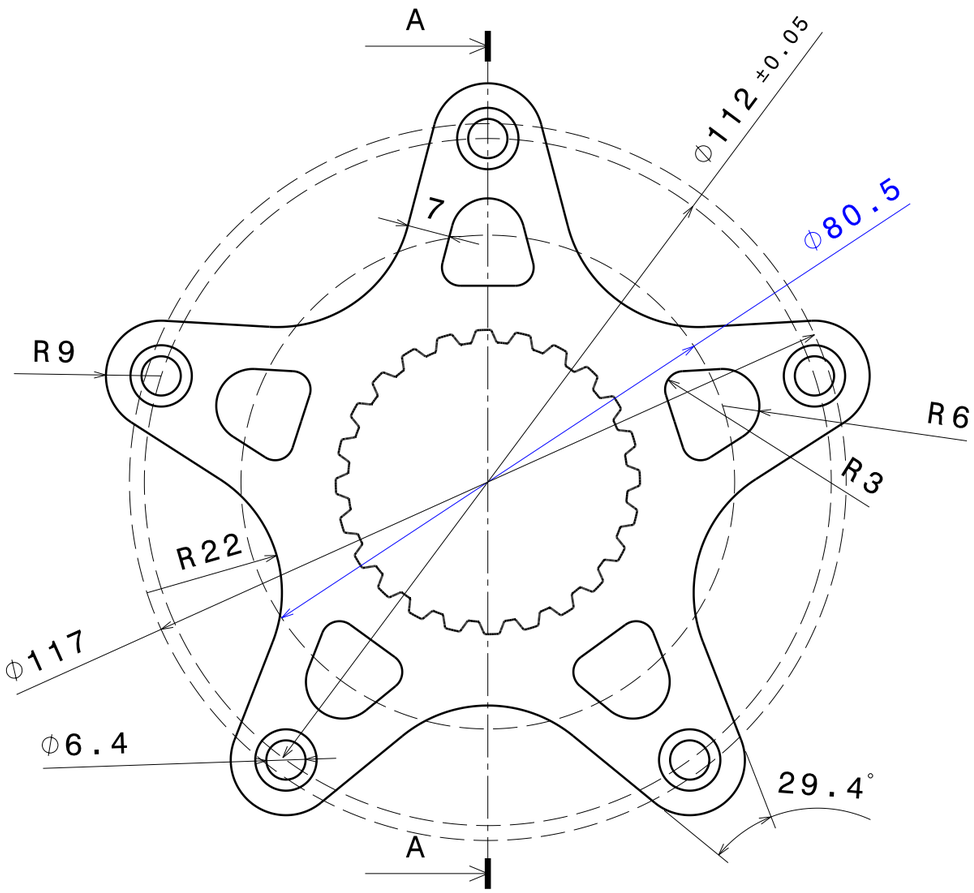

Vue de face
Echelle : 1:1

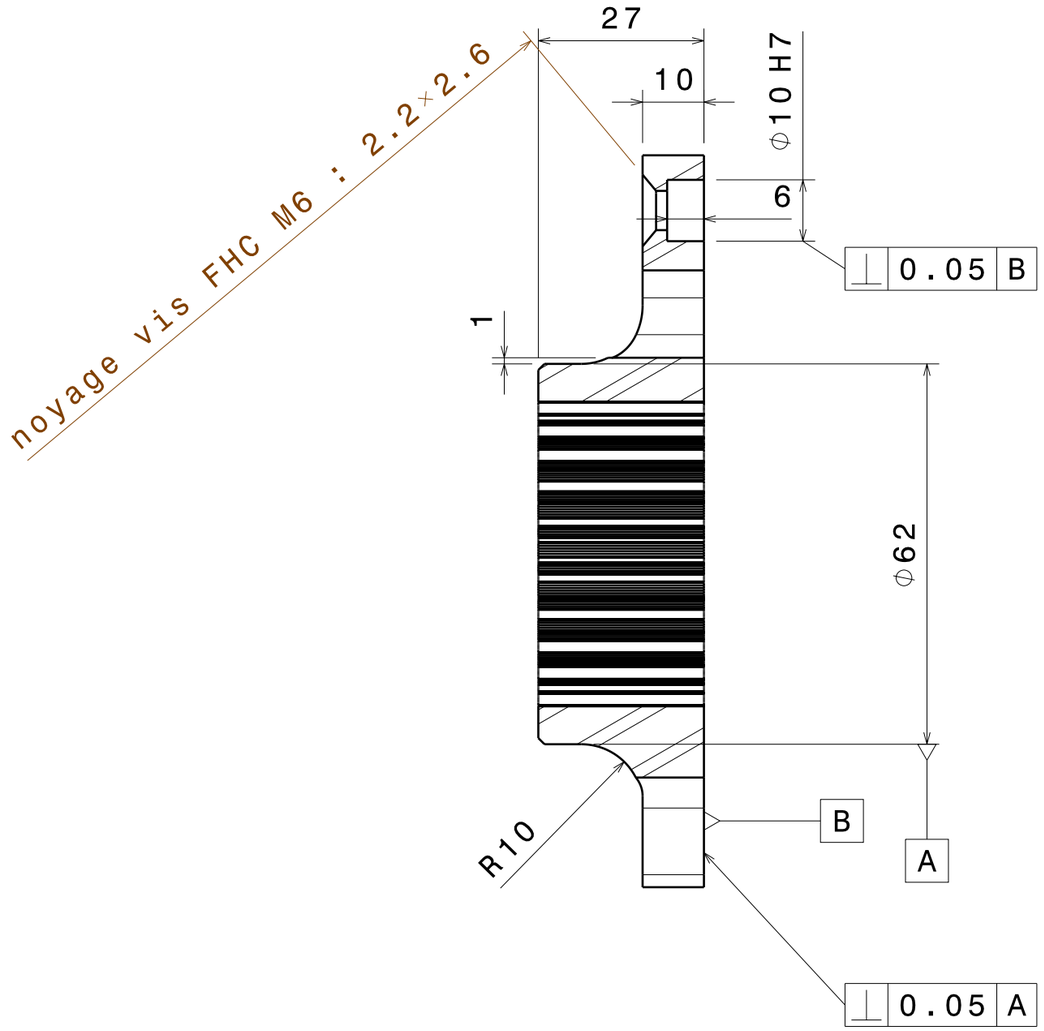

Coupe A-A
Echelle : 1:1

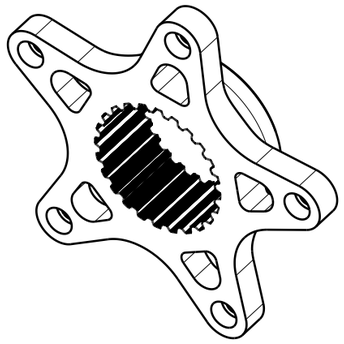

Vue isométrique
Echelle : 1:2

Taille A3		Ecurie Piston Sport Auto
Dessiné par Victor CADOR	Date 03/02/2015	Désignation Porte couronne
Coordonnées victor.cador@ecl13.ec-lyon.fr port. : 06 26 56 48 71		Quantité 1 / Matériau Aluminium (fourni) / Version V1.0
Plan vérifié par PMR		Echelle 1:1 / Numéro du plan 15-B-079 / Feuille 1/1

University	Ecole Centrale de Lyon			**Car #**	81	**Part Cost**	$ 8.06
System	Engine and Drivetrain	**FileLink1**				**Qty**	1
Assembly	chain set	**FileLink2**		**FileLink1**			
Part	chain shield	**FileLink3**		**FileLink2**		**Extended Cost**	$ 8.06
P/N Base	EN 12004			**FileLink3**			
Suffix	AA						
Details							

ItemOrder	Material	Use	UnitCost	Size1	Unit1	Size2	Unit2	Area Name	Area	Length	Density	Quantity	Sub Total
10	Steel, Mild	Material for the upper chain shield	$ 2.25	62	mm	3	mm	Rectangular area 62mm x	0.00019	0.646	8 010.00	1	$ 2.17
												Sub Total	**$ 2.17**

ItemOrder	Process	Use	UnitCost	Unit	Quantity	Multiplier	Mult. Val.	Sub Total
10	Machining Setup, Install and remove	Setup and removal of the machining of the shield	$ 1.30	unit	1			$ 1.30
20	Laser Cut	Shaping of the chain shield	$ 0.01	cm	121.5	Material-Steel	3	$ 3.65
30	Sheet metal bends	Bend to shape	$ 0.25	bend	1			$ 0.25
40	Drilled holes < 25.4 mm dia.	Hole for the lower chain shield	$ 0.35	hole	2			$ 0.70
							Sub Total	**$ 5.90**

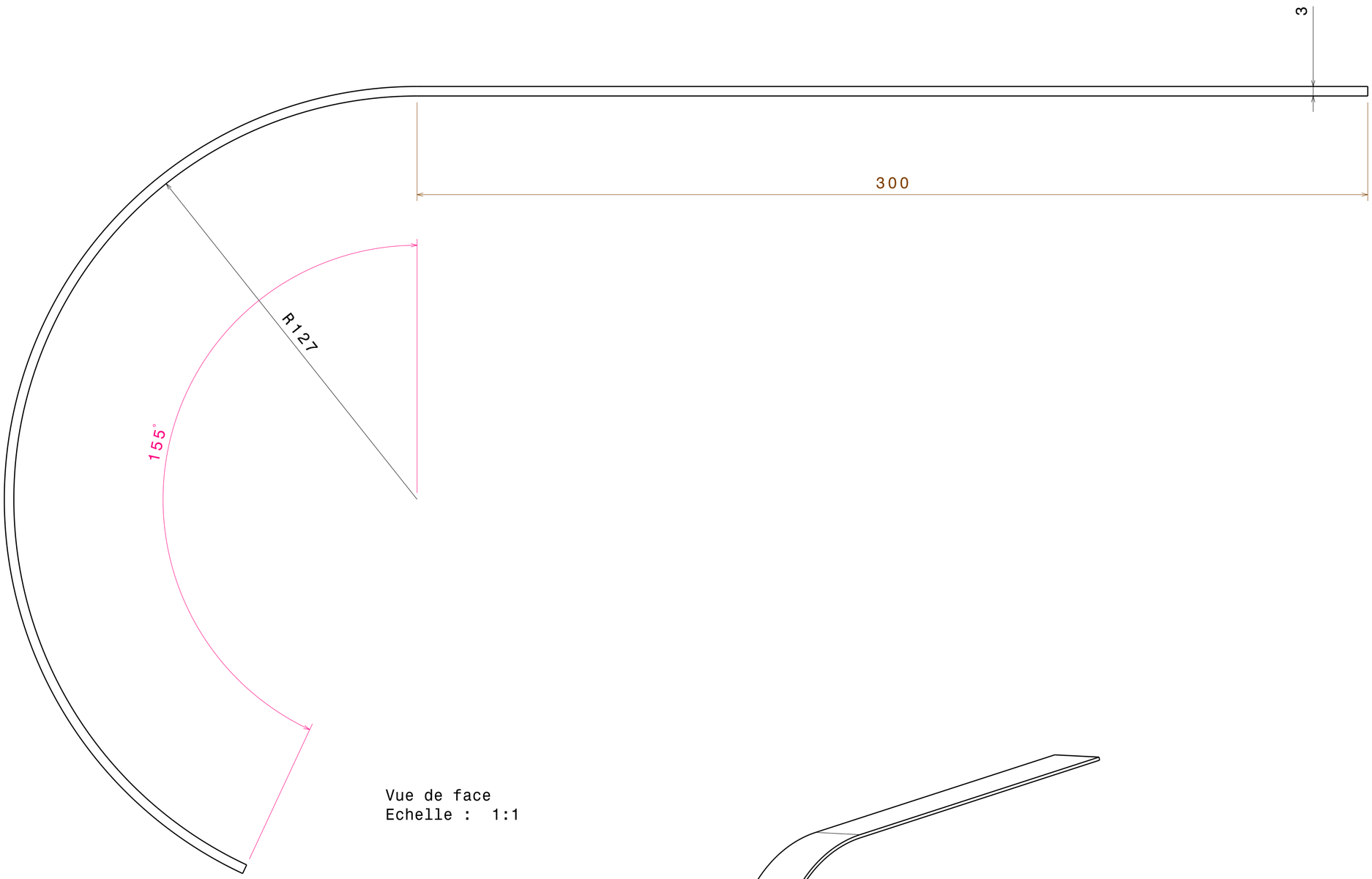

Vue de face
Echelle : 1:1

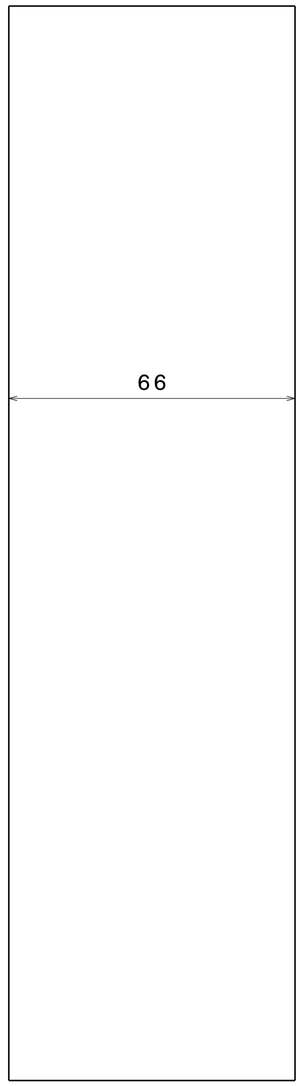

Vue de gauche
Echelle : 1:1

Brut : plaque acier 644X50X3
Tolérances générales ISO 2768-mk

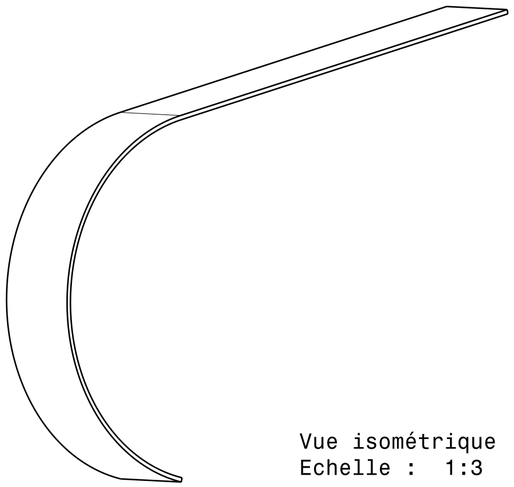

Vue isométrique
Echelle : 1:3

Taille A2		Ecurie Piston Sport Auto
Dessiné par Victor CADOR	Date 17/03/2015	Désignation cache chaine
Coordonnées victor.cador@ecl13.ec-lyon.fr port. : 06 26 56 48 71		Quantité 1 / Matériau acier / Version V0.1
Plan vérifié par XXX		Echelle 1:1 / Numéro du plan 15-M-090 / Feuille 1/1

University	Ecole Centrale de Lyon			**Car #**	81	**Part Cost**	$ 1.56
System	Engine and Drivetrain	**FileLink1**				**Qty**	1
Assembly	chain set	**FileLink2**		**FileLink1**			
Part	tab	**FileLink3**		**FileLink2**		**Extended Cost**	$ 1.56
P/N Base	EN 12005			**FileLink3**			
Suffix	AA						
Details							

ItemOrder	Material	Use	UnitCost	Size1	Unit1	Size2	Unit2	Area Name	Area	Length	Density	Quantity	Sub Total
10	Steel, Mild	Mounts material	2.25	15	mm	2	mm	Rectangular area (plate) 15mm x 2mm	0.00003	0.02	7860	1	$ 0.01
20	Paint	mounts paint	$ 10.00	0.0006	m^2							0.0006	$ 0.01
												Sub Total	**$ 0.02**

ItemOrder	Process	Use	UnitCost	Unit	Quantity	Multiplier	Mult. Val.	Sub Total
10	Machining Setup, Install and remove	Setup for machining	$ 1.30	unit	1			$ 1.30
20	Laser cut	Mounts cut	$ 0.01	cm	8.06	Material, Steel	3	$ 0.24
30	Aerosol apply	Mount painting	$ 5.25	m^2	0.0006			$ 0.00
							Sub Total	**$ 1.54**

University	Ecole Centrale de Lyon			**Car #**	81	**Part Cost**	$ 1.43
System	Engine and Drivetrain	**FileLink1**				**Qty**	5
Assembly	chain set	**FileLink2**		**FileLink1**			
Part	centering pin	**FileLink3**		**FileLink2**		**Extended Cost**	$ 7.14
P/N Base	EN 12006			**FileLink3**			
Suffix	AA						
Details							

ItemOrder	Material	Use	UnitCost	Size1	Unit1	Size2	Unit2	Area Name	Area	Length	Density	Quantity	Sub Total
10	Steel, Mild	Material for the centering pin	$ 2.25					round 12mm	0.00011	0.012	8 010.00	1	$ 0.02
												Sub Total	**$ 0.02**

ItemOrder	Process	Use	UnitCost	Unit	Quantity	Multiplier	Mult. Val.	Sub Total
10	Machining Setup, Install and remove	machining of the centering pin	$ 1.30	unit	1			$ 1.30
20	Machining	Shaping of the centering pin	$ 0.04	cm^3	0.870168026	Material-Steel	3	$ 0.10
							Sub Total	**$ 1.40**

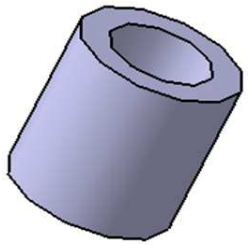

Tolérances générales ISO 2768-mk

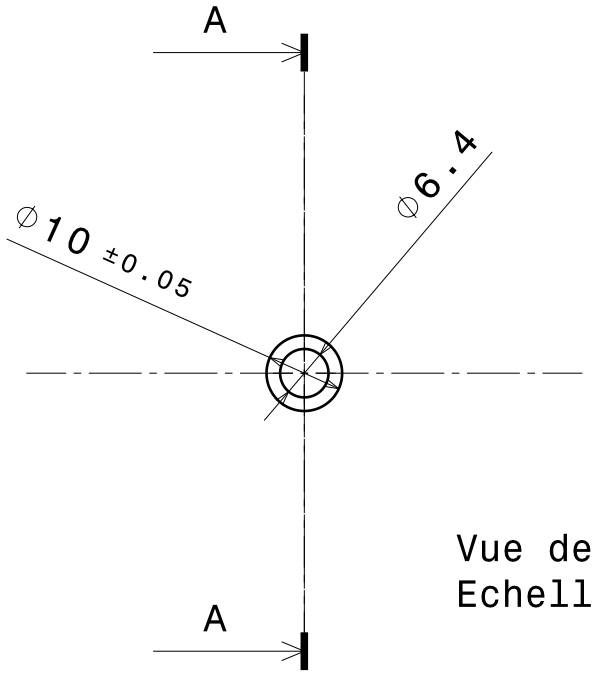

Vue de face
Echelle : 1:1

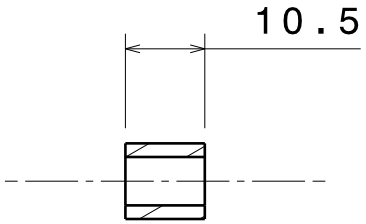

Coupe A-A
Echelle : 1:1

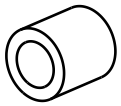

Vue isométrique
Echelle : 1:1

Taille A4		Ecurie Piston Sport Auto	
Dessiné par Victor CADOR	Date 27/03/2015	Désignation pion de centrage couronne	
Coordonnées victor.cador@ecl13.ec-lyon.fr port. : 06 26 56 48 71		Quantité 6	Matériau acier	Version V0.1
Plan vérifié par XXX 195		Echelle 1:1	Numéro du plan 15-B-080	Feuille 1/1

ÉCOLE CENTRALE LYON

FRAME & BODY

EPSA TEAM

CAR # 81

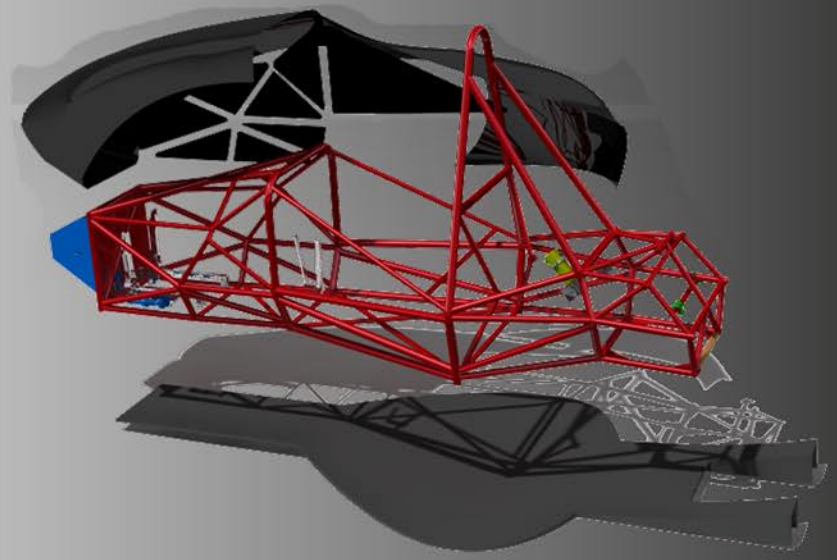

Ecurie Piston Sport Auto

University	Ecole Centrale De Lyon	**Car #**	81	**Asm Cost**	$ 633,09
System	Frame and body			**Qty**	1
Assembly	Frame	**FileLink1**			
P/N Base	A0001	**FileLink2**		**Extended C**	$ 633,09
Suffix	AA	**FileLink3**			
Details	Tubular steel space frame				

ItemOrder	Part	Part Cost	Quantity	Sub Total
10	Bent Round Steel Tubing	$ 19,90	1	19,90
20	Straight Round Steel Tubing	$ 280,88	1	280,88
30	Anti-intrusion plate	$ 10,64	1	10,64
40	Front gusset plate	$ 1,51	2	3,02
50	Rear gusset plate	$ 1,22	2	2,44
60	Suspensions gusset plate	$ 0,59	2	1,18
70	Tube cover Diameter 24mm	$ 0,41	2	0,82
80	Tube cover Diameter 26mm	$ 0,43	2	0,86
90	Tube cover Diameter 28mm	$ 0,46	4	1,84
			Sub Total	**321,58**

ItemOrder	Material	Use	UnitCost	Size1	Unit1	Size2	Unit2	Area Name	Area	Length	Density	Quantity	Sub Total
10	Paint	Frame and anti-intrusion plate	$ 10,00	3,71	m^2							3,71	$ 37,10
												Sub Total	**$ 37,100**

ItemOrder	Process	Use	UnitCost	Unit	Quantity	Multiplier	Mult. Val.	Sub Total
10	Weld tubing		$ 0,38	cm	464,52		1	$ 176,52
20	Weld	Gussets and anti-intrusion plate welding	$ 0,15	cm	147,19		1	$ 22,08
30	Aerosol Apply		$ 5,25	m^2	3,71		1	$ 19,48
							Sub Total	**218,07**

ItemOrder	Tooling	Use	UnitCost	Unit	Quantity	PVF	FractionIncluded	Sub Total
10	Welds - Welding Fixture	Frame Welding Fixture	$ 500,00	point	318	3000	1	$ 53,00
20	Welds - Welding Fixture	Gussets and anti intrusion plate Fixture	$ 500,00	point	20	3000	1	$ 3,33
							Sub Total	**56,33**

University	Ecole Centrale De Lyon			**Car #**	81	**Part Cost**	$ 19,90
System	Frame and body	**FileLink1**				**Qty**	1
Assembly	Frame	**FileLink2**		**FileLink1**			
Part	Bent Round Steel Tubing	**FileLink3**		**FileLink2**		**Extended Cost**	$ 19,90
P/N Base	01001			**FileLink3**			
Suffix	AA						
Details	Main & Front Hoop						

ItemOrder	Material	Use	UnitCost	Size1	Unit1	Size2	Unit2	Area Name	Area	Length	Density	Quantity	Sub Total
10	Steel Alloy	Main Hoop	$ 2,25	3,43	kg			Round 30mm x 2mm	1,759E-04	2,50	7 800,00	1,00	$ 7,72
20	Steel Alloy	Front Hoop	$ 2,25	1,815	kg			Round 30mm x 2mm	1,759E-04	1,32	7 800,00	1,00	$ 4,08
												Sub Total	**$ 11,800**

ItemOrder	Process	Use	UnitCost	Unit	Quantity	Multiplier	Mult. Val.	Sub Total
10	Tube bends	Main & Front Hoop Bends	$ 0,75	bend	5			$ 3,75
20	Tube cut	Cut to proper length	$ 0,15	cm	9			$ 1,35
30	Tube end preparation for welding		$ 0,75	end	4			$ 3,00
							Sub Total	**$ 8,10**

University	Ecole Centrale De Lyon			**Car #**	81	**Part Cost**	$ 280,88
System	Frame and body	**FileLink1**				**Qty**	1
Assembly	Frame	**FileLink2**		**FileLink1**			
Part	Straight Round Steel Tubing	**FileLink3**		**FileLink2**		**Extended Cost**	$ 280,88
P/N Base	01002			**FileLink3**			
Suffix	AA						
Details							

ItemOrder	Material	Use	UnitCost	Size1	Unit1	Size2	Unit2	Area Name	Area	Length	Density	Quantity	Sub Total
10	Steel, Alloy	Shoulder Harness Mounting Bar & Straight Part of Front Hoop	$ 2,25	1,257	kg			Round 30mm x 2mm	1,759E-04	0,916	7 800,00	1,00	$ 2,83
20	Steel, Alloy	Side Impact Structure, Front Bulkhead, Roll Hoop Bracing	$ 2,25	10,538	kg			Round 30mm x 1.5mm	1,343E-04	10,06	7 800,00	1,00	$ 23,71
30	Steel, Alloy	Front Bulkhead Support,Main Hoop Bracing Supports, Jacking Point, Miscellaneous	$ 2,25	10,262	kg			Round 25mm x 1.5mm	1,107E-04	11,88	7,80E+03	1,00	$ 23,09
40	Steel, Alloy	Miscellaneous	$ 2,25	10,244	kg			Round 20mm x 1.5mm	8,718E-05	15,07	7,80E+03	1,00	$ 23,05
												Sub Total	**72,68**

ItemOrder	Process	Use	UnitCost	Unit	Quantity	Multiplier	Mult. Val.	Sub Total
10	Tube cut	Cut to proper length	$ 0,15	cm	448			$ 67,20
20	Tube end preperation for welding		$ 0,75	end	188			$ 141,00
							Sub Total	**$ 208,20**

University	Ecole Centrale De Lyon		**Car #**	81	**Part Cost** $ 10,
System	Frame and body	**FileLink1**			**Qty**
Assembly	Frame	**FileLink2**	**FileLink1**		
Part	Anti-intrusion plate	**FileLink3**	**FileLink2**		**Extended Cost** $ 10,
P/N Base	01003		**FileLink3**		
Suffix	AA				
Details					

ItemOrder	Material	Use	UnitCost	Size1	Unit1	Size2	Unit2	Area Name	Area	Length	Density	Quantity	Sub Total
10	Steel, Alloy	Anti-intrusion plate	$ 2,25	1,58	kg			Rectangular Area 3	1,349E-01	1,50E-03	7 800,00	1	$ 3,
												Sub Total	**3,5**

ItemOrder	Process	Use	UnitCost	Unit	Quantity	Multiplier	Mult. Val.	Sub Total
10	Machining Setup, Install and remove	Setup for laser cutting	$ 1,30	unit	1			$ 1,30
20	Laser Cut		$ 0,01	cm	146,2	Material - Steel	3	$ 4,39
30	Drilled holes < 25.4 mm dia.		$ 0,35	hole	4			$ 1,40
							Sub Total	**$ 7,09**

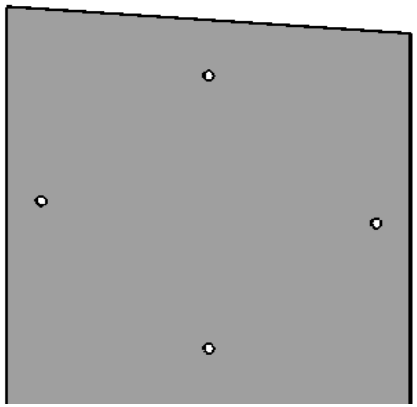

University	Ecole Centrale De Lyon			**Car #**	81	**Part Cost**	$ 2,59
System	Frame and body	**FileLink1**				**Qty**	2
Assembly	Frame	**FileLink2**		**FileLink1**			
Part	Front gusset plate	**FileLink3**		**FileLink2**		**Extended Cost**	$ 3,02
P/N Base	01004			**FileLink3**			
Suffix	AA						
Details							

ItemOrder	Material	Use	UnitCost	Size1	Unit1	Size2	Unit2	Area Name	Area	Length	Density	Quantity	Sub Total
10	Steel, Alloy	Front gusset plate	$ 2,25	0,2	kg			Rectangular Area 107mmx80mm	8,560E-03	3,00E-03	7 800,00	1,00E+00	$ 0,45
												Sub Total	**0,45**

ItemOrder	Process	Use	UnitCost	Unit	Quantity	Multiplier	Mult. Val.	Sub Total
10	Machining Setup, Install and remove	Setup for laser cutting of the 6 gusset plates	$ 1,30	unit	1			$ 1,30
20	Laser Cut		$ 0,01	cm	27,98	Material - Steel	3	$ 0,84
							Sub Total	**$ 2,14**

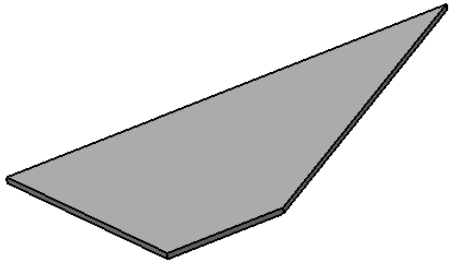

University	Ecole Centrale De Lyon			**Car #**	81	**Part Cost**	$ 2
System	Frame and body	**FileLink1**				**Qty**	
Assembly	Frame	**FileLink2**		**FileLink1**			
Part	Rear gusset plate	**FileLink3**		**FileLink2**		**Extended Cost**	$ 2
P/N Base	01005			**FileLink3**			
Suffix	AA						
Details							

ItemOrder	Material	Use	UnitCost	Size1	Unit1	Size2	Unit2	Area Name	Area	Length	Density	Quantity	Sub Total
10	Steel, Alloy	Rear gusset plate	$ 2,25	0,132	kg			Rectangular Area 7	5,625E-03	3,00E-03	7 800,00	1,00E+00	$ 0
												Sub Total	**0,**

ItemOrder	Process	Use	UnitCost	Unit	Quantity	Multiplier	Mult. Val.	Sub Total
10	Machining Setup, Install and remove	Setup for laser cutting of the 6 gusset plates	$ 1,30	unit	1			$ 1,30
20	Laser Cut		$ 0,01	cm	23,44	Material - Steel	3	$ 0,70
							Sub Total	**$ 2,00**

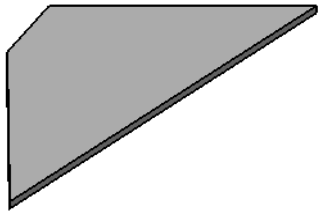

University	Ecole Centrale De Lyon			**Car #**	81	**Part Cost**	$ 1,68
System	Frame and body	**FileLink1**				**Qty**	2
Assembly	Frame	**FileLink2**		**FileLink1**			
Part	Suspensions gusset plate	**FileLink3**		**FileLink2**		**Extended Cost**	$ 1,18
P/N Base	01006			**FileLink3**			
Suffix	AA						
Details							

ItemOrder	Material	Use	UnitCost	Size1	Unit1	Size2	Unit2	Area Name	Area	Length	Density	Quantity	Sub Total
10	Steel, Alloy	Suspensions gusset plate	$ 2,25	0,0197	kg			Rectangular Area 42mmx20mm	8,400E-04	3,00E-03	7 800,00	1,00E+00	$ 0,04
												Sub Total	**0,04**

ItemOrder	Process	Use	UnitCost	Unit	Quantity	Multiplier	Mult. Val.	Sub Total
10	Machining Setup, Install and remove	Setup for laser cutting of the 6 gusset plates	$ 1,30	unit	1			$ 1,30
20	Laser Cut		$ 0,01	cm	11,11	Material - Steel	3	$ 0,33
							Sub Total	**$ 1,63**

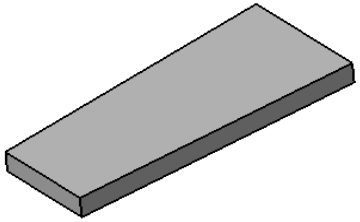

University	Ecole Centrale De Lyon			**Car #**	81	**Part Cost**	$ 1,55
System	Frame and body	**FileLink1**				**Qty**	2
Assembly	Frame	**FileLink2**		**FileLink1**			
Part	Tube cover Diam. 24	**FileLink3**		**FileLink2**		**Extended Cost**	$ 3,09
P/N Base	01007			**FileLink3**			
Suffix	AA						
Details							

ItemOrder	Material	Use	UnitCost	Size1	Unit1	Size2	Unit2	Area Name	Area	Length	Density	Quantity	Sub Total
10	Steel, Alloy	Tuber cover (24mm diameter disc)	$ 2,25	0,0092	kg			Rectangular Area 28mmx28mm	7,840E-04	1,50E-03	7 800,00	1,00E+00	$ 0,02
												Sub Total	**$ 0,02**

ItemOrder	Process	Use	UnitCost	Unit	Quantity	Multiplier	Mult. Val.	Sub Total
10	Machining Setup, Install and remove	Setup for laser cutting for the 8 tube covers	$ 1,30	unit	1			$ 1,30
20	Laser Cut		$ 0,01	cm	7,54	Material - Steel	3	$ 0,23
							Sub Total	**$ 1,53**

University	Ecole Centrale De Lyon			**Car #**	81	**Part Cost**	$ 1,57
System	Frame and body	**FileLink1**				**Qty**	2
Assembly	Frame	**FileLink2**		**FileLink1**			
Part	Tube cover Diam. 26	**FileLink3**		**FileLink2**		**Extended Cost**	$ 3,14
P/N Base	01008			**FileLink3**			
Suffix	AA						
Details							

ItemOrder	Material	Use	UnitCost	Size1	Unit1	Size2	Unit2	Area Name	Area	Length	Density	Quantity	Sub Total
10	Steel, Alloy	Tuber cover (26mm diameter disc)	$ 2,25	0,0105	kg			Rectangular Area 30mmx30mm	9,000E-04	1,50E-03	7 800,00	1,00E+00	$ 0,02
												Sub Total	**0,02**

ItemOrder	Process	Use	UnitCost	Unit	Quantity	Multiplier	Mult. Val.	Sub Total
10	Machining Setup, Install and remove	Setup for laser cutting	$ 1,30	unit	1			$ 1,30
20	Laser Cut		$ 0,01	cm	8,17	Material - Steel	3	$ 0,25
							Sub Total	**$ 1,55**

University	Ecole Centrale De Lyon			**Car #**	81	**Part Cost**	$ 0,46
System	Frame and body	**FileLink1**				**Qty**	4
Assembly	Frame	**FileLink2**		**FileLink1**			
Part	Tube cover Diam. 28	**FileLink3**		**FileLink2**		**Extended Cost**	$ 1,84
P/N Base	01009			**FileLink3**			
Suffix	AA						
Details							

ItemOrder	Material	Use	UnitCost	Size1	Unit1	Size2	Unit2	Area Name	Area	Length	Density	Quantity	Sub Total
10	Steel, Alloy	Tuber cover (28mm diameter disc)	$ 2,25	0,012	kg			Rectangular Area 32mmx32mm	1,024E-03	1,50E-03	7 800,00	1,00E+00	$ 0,03
												Sub Total	**0,03**

ItemOrder	Process	Use	UnitCost	Unit	Quantity	Multiplier	Mult. Val.	Sub Total
10	Machining Setup, Install and remove	Setup for laser cutting	$ 1,30	unit	1			$ 1,30
20	Laser Cut		$ 0,01	cm	8,79	Material - Steel	3	$ 0,26
							Sub Total	**$ 1,56**

University	Ecole Centrale de Lyon	**Car #**	81	**Asm Cost**	55,60
System	Frame and Body			**Qty**	1
Assembly	Impact Attenuator	**FileLink1**			
P/N Base	A0002	**FileLink2**		**Extended Cost**	$ 55,60
Suffix	AA	**FileLink3**			
Details	Impact Attenuator				

ItemOrder	Part	Part Cost	Quantity	Sub Total
10	Attenuator	$ 45,58	1	$ 45,58
			Sub Total	**$ 45,58**

ItemOrder	Process	Use	UnitCost	Unit	Quantity	Multiplier	Mult. Val.	Sub Total
10	Assemble, 1 kg, Loose	Assemble Attenuator on IA Plate	$ 0,06	unit	1		1	$ 0,06
20	Ratchet <= 25.4 mm	Bolt Attenuator on Plate	$ 0,75	unit	8			$ 6,00
30	Reaction Tool <= 25.4 mm	Bolt Attenuator on Plate	$ 0,25	unit	8			$ 2,00
							Sub Total	**$ 8,06**

ItemOrder	Fastener	Use	UnitCost	Size1	Unit1	Size2	Unit2	Quantity	Sub Total
10	Bolt,Grade 8.8 (SAE)		$ 0,39	8	mm	80	mm	4	$ 1,56
20	Nut, Grade 8.8 (SAE 5)		$ 0,04	8	mm			8	$ 0,32
30	Washer, Grade 8.8 (SAE 5)		$ 0,01	unit				8	$ 0,08
								Sub Total	**$ 1,96**

University	Ecole Centrale de Lyon		**Car #**	81	**Part Cost** 45,58
System	Frame and Body	**FileLink1**			**Qty** 1
Assembly	Impact Attenuator	**FileLink2**	**FileLink1**		
Part	Attenuator	**FileLink3**	**FileLink2**		**Extended Cost** $ 45,58
P/N Base	02001		**FileLink3**		
Suffix	AA				
Details	FSAE Impact Attenuator Type 15, bought, cost as made				

ItemOrder	Material	Use	UnitCost	Size1	Unit1	Size2	Unit2	Area Name	Area	Length	Density	Quantity	Sub Total
10	Foam, Expanding, Non-Structural	First part of foam	$ 15,00	355	mm	305	mm	Rectangular Area 355mmx305mm	1,083E-01	8,47E-02	45,00	1,00E+00	$ 6,19
20	Foam, Expanding, Non-Structural	Second part of foam	$ 15,00	305	mm	237	mm	Rectangular Area 305mmx237mm	7,229E-02	8,47E-02	45,00	1,00E+00	$ 4,13
30	Foam, Expanding, Non-Structural	Third part of foam	$ 15,00	254	mm	169	mm	Rectangular Area 254mmx169mm	4,293E-02	8,47E-02	45,00	1,00E+00	$ 2,45
40	Adhesive	Assemble foam parts, cost included in process											$ -
												Sub Total	**$ 12,777**

ItemOrder	Process	Use	UnitCost	Unit	Quantity	Multiplier	Mult. Val.	Sub Total
10	Non metallic cutting > 76.2 mm	Cut first part side	$ 1,40	cut	4	Material - Foam	0,33	$ 1,85
20	Brush Apply	Apply glue on first part	$ 0,02	cm^2	710		1	$ 14,20
30	Non metallic cutting > 76.2 mm	Cut second part side	$ 1,40	cut	4	Material - Foam	0,33	$ 1,85
40	Brush Apply	Apply glue on second part	$ 0,02	cm^2	430		1	$ 8,60
50	Non metallic cutting > 76.2 mm	Cut third part side	$ 1,40	cut	4	Material - Foam	0,33	$ 1,85
60	Assemble, 1 kg, LineTonTLine	Glue 3 parts	$ 0,13	unit	2		1	$ 0,26
70	Drilled holes < 25.4 mm dia.	Drill holes for bolts	$ 0,35	hole	4		1	$ 1,40
80	Drilled holes < 25.4 mm dia.	Drill largest holes at each extremities of the previo	$ 0,35	hole	8		1	$ 2,80
							Sub Total	**$ 32,80**

University	Ecole Centrale de Lyon	**Car #**	81	**Asm Cost**	2 065,59
System	Frame and Body			**Qty**	1
Assembly	Undertray and Wind Tunnel	**FileLink1**			
P/N Base	FR A0003	**FileLink2**		**Extended Cost**	$ 2 065,59
Suffix	AA	**FileLink3**			
Details	Complete Undretray and Wind Tunnel - Aerodynamic Assembly				

ItemOrder	Part	Part Cost	Quantity	Sub Total
10	Undertray front	$ 172,87	1	$ 172,87
20	Undertray midle	$ 514,85	1	$ 514,85
30	Wind tunnel - Upper	$ 760,63	1	$ 760,63
40	Wind tunnel sides	$ 287,72	2	$ 575,43
50	Undertray Mount	$ 1,67	12	$ 20,04
60	Carbon Equerre	$ 6,38	1	$ 6,38
			Sub Total	**$ 2 050,20**

ItemOrder	Material	Use	UnitCost	Size1	Unit1	Size2	Unit2	Area Name	Area	Length	Density	Quantity	Sub Total
10	Adhesive	Glue for Body Plates Mounts fixing - cost included in process										-	$ -
20	Paint	Protect Body Mounts from Rust	$ 10,00	0,0108	m²							1,00	$ 0,11
												Sub Total	**$ 0,11**

ItemOrder	Process	Use	UnitCost	Unit	Quantity	Multiplier	Mult. Val.	Sub Total
10	Weld	weld mounts to frame	$ 0,15	cm	24			$ 3,60
20	Aerosol Apply	Protect Body Mounts from Rust	$ 5,25	m²	0,01296			$ 0,07
30	Riveting	For nutsert on Body and Body Plates Mounts (similar process)	$ 0,25	unit	12			$ 3,00
30	Assemble, 1 kg, Loose	Assemble wind tunnel side on the upper	$ 0,06	unit	4			$ 0,24
40	Ratchet <= 6.35 mm	M6 mounts	$ 0,50	unit	12			$ 6,00
50	Assemble, 1 kg, Loose	Undertray front mount	$ 0,06	unit	1			$ 0,06
60	Ratchet <= 6.35 mm	M6 mounts	$ 0,50	unit	6			$ 3,00
50	Assemble, 1 kg, Loose	Undertray middle mount	$ 0,06	unit	1			$ 0,06
60	Ratchet <= 6.35 mm	M6 mounts	$ 0,50	unit	4			$ 2,00
50	Assemble, 3 kg, Loose	Wind Tunnel mount	$ 0,19	unit	1			$ 0,19
60	Ratchet <= 6.35 mm	M6 mounts	$ 0,50	unit	2			$ 1,00
							Sub Total	**$ 6,91**

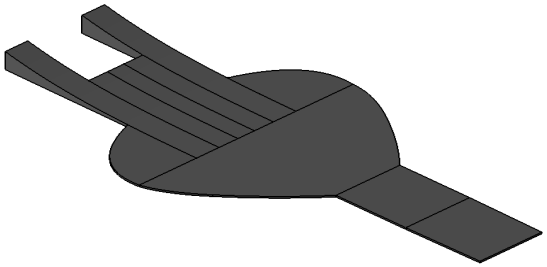

ItemOrder	Fastener	Use	UnitCost	Size1	Unit1	Size2	Unit2	Quantity	Sub Total
10	Bolt,Grade 8.8 (SAE)	Undertray fixing and Wind Tunnel assembly	$ 0,04	6	mm	20	mm	24	$ 0,96
20	Nutsert	Undertray and wind tunnel fixing	$ 0,22	6	mm			12	$ 2,69
30	Nut, Grade 8.8 (SAE 5)	Nuts for Wind Tunnel assembly	$ 0,03	6	mm			12	$ 0,36
40	Washer, Grade 8.8 (SAE 5)	Undertray fixing and Wind Tunnel assembly	$ 0,01	6	mm			36	$ 0,36
								Sub Total	**$ 4,37**

ItemOrder	Tooling	Use	UnitCost	Unit	Quantity	PVF	FractionIncluded	Sub Total
10	Welds - Welding Fixture	Exemple de Tooling	$ 500,00	point	24	3000	1	$ 4,00
							Sub Total	**$ 4,00**

University	Ecole Centrale de Lyon			**Car #**	81	**Part Cost**	$ 172,87
System	Frame and Body	**FileLink1**				**Qty**	1
Assembly	Body	**FileLink2**		**FileLink1**			
Part	Undertray front	**FileLink3**		**FileLink2**		**Extended Cost**	$ 172,87
P/N Base	FR 03001			**FileLink3**			
Suffix	AA						
Details	First part of the undertray						

ItemOrder	Material	Use	UnitCost	Size1	Unit1	Size2	Unit2	Area Name	Area	Length	Density	Quantity	Sub Total
10	Carbon Fiber, 1 Ply	Composite	$ 200,00	0,1	kg				0,30000			4	$ 80,00
20	Structural Foam	Composite	$ 125,00	0,168	kg	8	mm		0,30000		70,00	1	$ 21,00
												Sub Total	**$ 101,00**

ItemOrder	Process	Use	UnitCost	Unit	Quantity	Multiplier	Mult. Val.	Sub Total
10	Lamination, Manual	Lamination of the plys and the foam	$ 35,00	m²	0,3	Repeat 5	5	$ 52,50
20	Resin application, Infusion Molding	Resin application on the 4 carbon plys	$ 2,50	m²	0,3	Repeat 4	4	$ 3,00
30	Vacuum Form		$ 10,00	m²	0,3			$ 3,00
40	Cure, Room Temperature		$ 10,00	m²	0,3			$ 3,00
50	Machining Setup, Install and remove	Setup for machining	$ 1,30	unit	1			$ 1,30
60	Waterjet Cut	Cutting the outer profil	$ 0,01	cm	236	Material - Composite	2	$ 4,72
70	Drilled holes < 25.4 mm dia.	Holes for fixation	$ 0,35	unit	6	Material - Composite	2	$ 4,20
							Sub Total	**$ 71,72**

ItemOrder	Tooling	Use	UnitCost	Unit	Quantity	PVF	FracIncld	Sub Total
100	Lamination - Flat Panel Tool	Mold for all plates	$ 1 500,00	m²	0,3	3000	1	$ 0,15
							Sub Total	**$ 0,15**

University	Ecole Centrale de Lyon			**Car #**	81	**Part Cost**	$ 514,85
System	Frame and Body	**FileLink1**				**Qty**	1
Assembly	Body	**FileLink2**		**FileLink1**			
Part	Undertray midle	**FileLink3**		**FileLink2**		**Extended Cost**	$ 514,85
P/N Base	FR 03002			**FileLink3**			
Suffix	AA						
Details	Second part of the undertray						

ItemOrder	Material	Use	UnitCost	Size1	Unit1	Size2	Unit2	Area Name	Area	Length	Density	Quantity	Sub Total
10	Carbon Fiber, 1 Ply	Composite	$ 200,00	0,31	kg				0,93000			4	$ 248,00
20	Structural Foam	Composite	$ 125,00	0,5208	kg	8	mm		0,93000		70,00	1	$ 65,10
												Sub Total	**$ 313,10**

ItemOrder	Process	Use	UnitCost	Unit	Quantity	Multiplier	Mult. Val.	Sub Total
10	Lamination, Manual	Lamination of the plys and the foam	$ 35,00	m²	0,93	Repeat 5	5	$ 162,75
20	Resin application, Infusion Molding	Resin application on the 4 carbon plys	$ 2,50	m²	0,93	Repeat 4	4	$ 9,30
30	Vacuum Form		$ 10,00	m²	0,93			$ 9,30
40	Cure, Room Temperature		$ 10,00	m²	0,93			$ 9,30
50	Machining Setup, Install and remove	Setup for machining	$ 1,30	unit	1			$ 1,30
60	Waterjet Cut	Cutting the outer profil	$ 0,01	cm	326,9	Material - Composite	2	$ 6,54
70	Drilled holes < 25.4 mm dia.	Holes for fixation	$ 0,35	unit	4	Material - Composite	2	$ 2,80
							Sub Total	**$ 201,29**

ItemOrder	Tooling	Use	UnitCost	Unit	Quantity	PVF	FracIncld	Sub Total
100	Lamination - Flat Panel Tool	Mold for all plates	$ 1 500,00	m²	0,93	3000	1	$ 0,47
							Sub Total	**$ 0,47**

University	Ecole Centrale de Lyon			**Car #**	81	**Part Cost**	$ 760,63
System	Frame and Body	**FileLink1**				**Qty**	1
Assembly	Body	**FileLink2**		**FileLink1**			
Part	Wind tunnel - Upper	**FileLink3**		**FileLink2**		**Extended Cost**	$ 760,63
P/N Base	FR 03004			**FileLink3**			
Suffix	AA						
Details							

ItemOrder	Material	Use	UnitCost	Size1	Unit1	Size2	Unit2	Area Name	Area	Length	Density	Quantity	Sub Total
10	Carbon Fiber, 1 Ply	Composite	$ 200,00	0,453	kg				1,36100			4	$ 362,40
20	Structural Foam	Composite	$ 125,00	0,76216	kg	8	mm		1,36100		70,00	1	$ 95,27
												Sub Total	**$ 457,67**

ItemOrder	Process	Use	UnitCost	Unit	Quantity	Multiplier	Mult. Val.	Sub Total
10	Lamination, Manual	Lamination of the plys and the foam	$ 35,00	m²	1,361	Repeat 5	5	$ 238,18
20	Resin application, Infusion Molding	Resin application on the 4 carbon plys	$ 2,50	m²	1,361	Repeat 4	4	$ 13,61
30	Vacuum Form		$ 10,00	m²	1,361			$ 13,61
40	Cure, Room Temperature		$ 10,00	m²	1,361			$ 13,61
50	Machining Setup, Install and remove	Setup for machining	$ 1,30	unit	1			$ 1,30
60	Waterjet Cut	Cutting the outer profil	$ 0,01	cm	503,5	Material - Composite	2	$ 10,07
70	Drilled holes < 25.4 mm dia.	Holes for fixation	$ 0,35	unit	17	Material - Composite	2	$ 11,90
							Sub Total	**$ 302,28**

ItemOrder	Tooling	Use	UnitCost	Unit	Quantity	PVF	FracIncld	Sub Total
100	Lamination - Flat Panel Tool	Mold for all plates	$ 1 500,00	m²	1,361	3000	1	$ 0,68
							Sub Total	**$ 0,68**

University	Ecole Centrale de Lyon			**Car #**	81	**Part Cost**	$ 287,72
System	Frame and Body	**FileLink1**				**Qty**	2
Assembly	Body	**FileLink2**		**FileLink1**			
Part	Wind tunnel sides	**FileLink3**		**FileLink2**		**Extended Cost**	$ 575,43
P/N Base	FR 03004			**FileLink3**			
Suffix	AA						
Details							

ItemOrder	Material	Use	UnitCost	Size1	Unit1	Size2	Unit2	Area Name	Area	Length	Density	Quantity	Sub Total
10	Carbon Fiber, 1 Ply	Composite	$ 200,00	0,41	kg				1,23200			2	$ 164,00
												Sub Total	**$ 164,00**

ItemOrder	Process	Use	UnitCost	Unit	Quantity	Multiplier	Mult. Val.	Sub Total
10	Lamination, Manual	Lamination of the plys	$ 35,00	m²	1,232	Repeat 2	2	$ 86,24
20	Resin application, Manual	Resin application on the 4 carbon plys	$ 5,00	m²	1,232	Repeat 2	2	$ 12,32
40	Cure, Room Temperature		$ 10,00	m²	1,232			$ 12,32
50	Machining Setup, Install and remove	Setup for machining	$ 1,30	unit	1			$ 1,30
60	Non-metallic cutting > 76.2 mm	Cutting the part into two pieces	$ 1,40	unit	1	Material - Composite	2	$ 2,80
70	Drilled holes < 25.4 mm dia.	Holes for fixation	$ 0,35	unit	6	Material - Composite	2	$ 4,20
							Sub Total	**$ 119,18**

ItemOrder	Tooling	Use	UnitCost	Unit	Quantity	PVF	FracIncld	Sub Total
100	Lamination - Composite Tool	Mold	$ 10 000,00	m²	1,361	3000	1	$ 4,54
							Sub Total	**$ 4,54**

University	Ecole Centrale de Lyon			**Car #**	81	**Part Cost**	$ 1,67
System	Frame and Body	**FileLink1**				**Qty**	12
Assembly	Body	**FileLink2**		**FileLink1**			
Part	Undertray Mount	**FileLink3**		**FileLink2**		**Extended Cost**	$ 20,04
P/N Base	FR 03005			**FileLink3**			
Suffix	AA						
Details	Déscription brève de la pièce						

ItemOrder	Material	Use	UnitCost	Size1	Unit1	Size2	Unit2	Area Name	Area	Length	Density	Quantity	Sub Total
10	Steel, Mild	Material for part	$ 2,25	0,0305	m	0,023	m	Rectangular 30,5x23mm	0,00070	0,003	7 860,00	1	$ 0,03
												Sub Total	**$ 0,03**

ItemOrder	Process	Use	UnitCost	Unit	Quantity	Multiplier	Mult. Val.	Sub Total
10	Machining Setup, Install and remove	Setup for machining	$ 1,30	unit	1			$ 1,30
20	Laser Cut	Mount Countourning	$ 0,01	cm	11,3	Material - Steel	3	$ 0,34
							Sub Total	**$ 1,64**

University	Ecole Centrale de Lyon			**Car #**	81	**Part Cost** $ 6,38
System	Frame and Body	**FileLink1**				**Qty** 1
Assembly	Body	**FileLink2**		**FileLink1**		
Part	Carbon Equerre	**FileLink3**		**FileLink2**		**Extended Cost** $ 6,38
P/N Base	FR 03006			**FileLink3**		
Suffix	AA					
Details	Equerre for positionning the windtunnel on the undertray					

ItemOrder	Material	Use	UnitCost	Size1	Unit1	Size2	Unit2	Area Name	Area	Length	Density	Quantity	Sub Total
10	Carbon Fiber, 1 Ply	Composite	$ 200,00	0,00942	kg				0,02800			2	$ 3,77
												Sub Total	**$ 3,77**

ItemOrder	Process	Use	UnitCost	Unit	Quantity	Multiplier	Mult. Val.	Sub Total
10	Lamination, Manual	Lamination of the plys	$ 35,00	m²	0,02800	Repeat 2	2	$ 1,96
20	Resin application, Manual	Resin application on the 2 carbon plys	$ 5,00	m²	0,02800	Repeat 2	2	$ 0,28
30	Cure, Room Temperature		$ 10,00	m²	0,02800			$ 0,28
							Sub Total	**$ 2,52**

ItemOrder	Tooling	Use	UnitCost	Unit	Quantity	PVF	FracIncld	Sub Total
10	Lamination - Composite Tool	Mold	$ 10 000,00	m²	0,028	3000	1	$ 0,09
							Sub Total	**$ 0,09**

University	Ecole Centrale de Lyon	**Car #**	81	**Asm Cost**	222,53
System	Frame and Body			**Qty**	1
Assembly	Body	**FileLink1**			
P/N Base	FR A0004	**FileLink2**		**Extended Cost**	$ 222,53
Suffix	AA	**FileLink3**			
Details	Adjustable 2 pedals assembly				

ItemOrder	Part	Part Cost	Quantity	Sub Total
10	Front Rails Mounts	$ 2,0	4	$ 8,18
20	Rear Rails Mount	1,9	4	$ 7,79
30	Pedal Rail	15,1	2	$ 30,30
40	Throttle Pedal	11,9	1	$ 11,96
50	Throttle Pedal Bushing	$ 1,4	2	$ 2,83
60	Throttle Pedal Axle	1,8	1	$ 1,86
70	Throttle Pedal Stop	4,4	1	$ 4,47
80	Throttle Pedal Stop Cylinder	$ 1,3	1	$ 1,33
90	Throttle actuation brace	$ 1,8	1	$ 1,83
100	Throttle Actuation	$ 3,1	1	$ 3,19
110	Left Side Throttle Pedal Support	$ 11,8	1	$ 11,80
120	Throttle Rocker	$ 8,2	1	$ 8,21
130	Right Side Throttle Pedal Support	$ 3,7	1	$ 3,71
140	Throttle Foot Support	$ 4,8	2	$ 9,67
150	Brake Pedal	$ 76,7	1	$ 76,73
160	Brake Pedal Bushing	$ 1,4	2	$ 2,83
170	Ballance Bar Support	$ 1,4	2	$ 2,83
180	Master Cylinder Bar	$ 2,9	1	$ 2,99
190	Overtravel Swich Mount	$ 2,4	1	$ 2,44
			Sub Total	**$ 192,51**

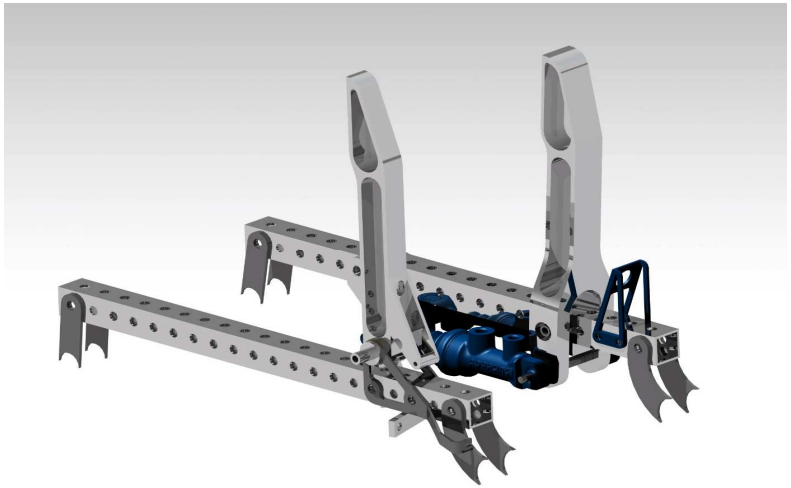

ItemOrder	Material	Use	UnitCost	Size1	Unit1	Size2	Unit2	Area Name	Area	Length	Density	Quantity	Sub Total
10	Paint	Protect Mounts from rust	$ 10,00	0,02244	m²							1,00	$ 0,22
20	Cable, Pull	Link between Throttle Actuator and Throttle Rocker	$ 15,00	70	mm							1,00	$ 1,05
30	Adhesive - cost in process	Glue for Balance Bar Support											$ -
												Sub Total	**$ 1,27**

ItemOrder	Process	Use	UnitCost	Unit	Quantity	Multiplier	Mult. Val.	Sub Total
10	Weld	Welding Rail Mounts on frame	$ 0,15	cm	24,8			$ 3,72
20	Aerosol Apply	Protect Mounts from rust	$ 5,25	m²	0,02244			$ 0,12
30	Assemble, 1kg, Interference	Insert bronze pedal bushing into throttle pedal	$ 0,19	unit	2			$ 0,38
40	Assemble, 1kg, Interference	Insert Throttle Pedal Axle into bushings	$ 0,19	unit	1			$ 0,19
50	Assemble, 1kg, Loose	Throttle pedal stop on pedal	$ 0,06	unit	1			$ 0,06
60	Ratchet <= 6,35mm	M6 Bolt for pedal stop fixing	$ 0,50	unit	2			$ 1,00
70	Reaction Tool <=6,35mm	M6 Nut	$ 0,25	unit	2			$ 0,50
80	Assemble, 1kg, Loose	Throttle Stop Tube on Throttle Stop	$ 0,06	unit	1			$ 0,06
90	Ratchet <= 6,35mm	M4 Bolt for Throttle Stop Tube fixing	$ 0,50	unit	1			$ 0,50
100	Reaction Tool <=6,35mm	M4 Nut	$ 0,25	unit	1			$ 0,25
110	Assemble, 1kg, Loose	Throttle Actuation Brace on Throttle Pedal	$ 0,06	unit	1			$ 0,06
120	Assemble, 1kg, Loose	Throttle Actuation on Throttle Actuation Brace	$ 0,06	unit	1			$ 0,06
130	Ratchet <= 6,35mm	M6 Bolt for Throttle Actuation fixing	$ 0,50	unit	2			$ 1,00
140	Reaction Tool <=6,35mm	M6 Nut	$ 0,25	unit	2			$ 0,50

150	Assemble, 1kg, Loose	Throttle Rocker on Left Side Throttle Pedal Support	$ 0,06	unit	1			$	0,06
160	Ratchet <= 6,35mm	M4 Bolt for Throttle Rocker fixing	$ 0,50	unit	2			$	1,00
170	Reaction Tool <=6,35mm	M4 Nut	$ 0,25	unit	2			$	0,50
180	Assemble, 1kg, Line to Line	Throttle cable adjuster on Throttle Rocker	$ 0,13	unit	1			$	0,13
190	Hand, Loos <=25,4mm	Throttle cable adjuster on Throttle Rocker	$ 0,50	unit	1			$	0,50
200	Assemble, 1kg, Line to Line	Left Side Throttle Pedal Support on Throttle Pedal Axle	$ 0,13	unit	1			$	0,13
210	Assemble, 1kg, Line to Line	Right Side Throttle Pedal Support on Throttle Pedal Axle	$ 0,13	unit	1			$	0,13
220	Ratchet <= 6,35mm	M6 Bolt for Throttle Rocker fixing	$ 0,50	unit	1			$	0,50
230	Reaction Tool <=6,35mm	M6 Nut	$ 0,25	unit	1			$	0,25
240	Assemble, 1kg, Line to Line	Throttle Pedal and his Supports on Rail	$ 0,13	unit	1			$	0,13
250	Ratchet <= 25,4mm	M8 Bolt for Throttle Support Fixing	$ 0,75	unit	2			$	1,50
260	Reaction Tool <=25,4mm	M8 Nut	$ 0,25	unit	2			$	0,50
270	Assemble, 1kg, Loose	Throttle Foot Support on Rail	$ 0,06	unit	1			$	0,06
280	Ratchet <= 6,35mm	M6 Bolt for Foot Support fixing	$ 0,50	unit	2			$	1,00
290	Reaction Tool <=6,35mm	M6 Nut	$ 0,25	unit	2			$	0,50
300	Assemble, 1kg, Interference	Insert bronze pedal bushing into brake pedal	$ 0,19	unit	2			$	0,38
310	Assemble, 1kg, Line to Line	Insert Brake Pedal on Rail	$ 0,13	unit	1			$	0,13
320	Assemble, 1kg, Interference	Insert Brake Pedal Axcel between Brake Pedal and Rail	$ 0,19	unit	1			$	0,19
330	Ratchet <= 6,35mm	M6 Bolt for Throttle Rocker fixing	$ 0,50	unit	1			$	0,50
340	Reaction Tool <=6,35mm	M6 Nut	$ 0,25	unit	1			$	0,25
350	Assemble, 1kg, Line to Line	Ballance Bar Support on Ballance Bar	$ 0,13	unit	1			$	0,13
360	Liquid Applicator Gun	Gluing Ballance Bar Support	$ 0,02	cm	9,9224	Repeat 2	2	$	0,40
370	Assemble, 1kg, Line to Line	Ballance Bar on Rail	$ 0,13	unit	1			$	0,13
380	Ratchet <= 25,4mm	M10 Bolt for Balance Bar Support on Rail	$ 0,75	unit	2			$	1,50
390	Reaction Tool <=25,4mm	M10 Nut	$ 0,25	unit	2			$	0,50
400	Assemble, 1kg, Line to Line	Master Cylinder Bar on Brake Pedal	$ 0,13	unit	1			$	0,13
410	Assemble, 1kg, Line to Line	Master Cylinder on Master Cylinder Bar	$ 0,13	unit	2			$	0,26
420	Ratchet <= 6,35mm	M6 Nut for Master Cylinder	$ 0,50	unit	2			$	1,00
430	Reaction Tool <=6,35mm	M6 Nut	$ 0,25	unit	2			$	0,50
440	Assemble, 1kg, Line to Line	Master Cylinder on Balance Bar	$ 0,13	unit	2			$	0,26
450	Reaction Tool <=6,35mm	M6 Nut of Master Cylinder	$ 0,25	unit	2			$	0,50
460	Assemble, 1kg, Line to Line	Put Overtravel Switch Mount in position	$ 0,13	unit	1			$	0,13
470	Ratchet <= 6,35mm	M6 Bolt for Overtravel Switch	$ 0,50	unit	1			$	0,50
480	Reaction Tool <=6,35mm	M6 Nut	$ 0,25	unit	1			$	0,25
490	Assemble, 1kg, Line to Line	Put Overtravel Switch in position	$ 0,13	unit	1			$	0,13
500	Hand, Loos <=25,4mm	Screw on plastic nut	$ 0,50	unit	1			$	0,50
							Sub Total	**$**	**23,55**

ItemOrder	Fastener	Use	UnitCost	Size1	Unit1	Size2	Unit2	Quantity	Sub Total
10	Bolt,Grade 8.8 (SAE)	Throttle Pedal Stop on Throttle Pedal	$ 0,04	6	mm	20	mm	2	$ 0,08
20	Nut, Grade 8.8 (SAE 5)	Throttle Pedal Stop on Throttle Pedal	$ 0,03	6	mm			2	$ 0,06
30	Washer, Grade 8,8 (SAE 5)	Throttle Pedal Stop on Throttle Pedal	$ 0,01	6	mm			4	$ 0,04
40	Bolt,Grade 8.8 (SAE)	Throttle Stop Tube on Throttle Stop	$ 0,03	4	mm	30	mm	1	$ 0,03
50	Nut, Grade 8.8 (SAE 5)	Throttle Stop Tube on Throttle Stop	$ 0,02	4	mm			1	$ 0,02
60	Washer, Grade 8,8 (SAE 5)	Throttle Stop Tube on Throttle Stop	$ 0,01	4	mm			2	$ 0,02
70	Bolt,Grade 8.8 (SAE)	Throttle Actuation on Throttle Pedal	$ 0,04	6	mm	15	mm	2	$ 0,08

80	Nut, Grade 8.8 (SAE 5)	Throttle Actuation on Throttle Pedal	$ 0,03	6	mm			2	$ 0,06
90	Washer, Grade 8,8 (SAE 5)	Throttle Actuation on Throttle Pedal	$ 0,01	6	mm			4	$ 0,04
100	Bolt,Grade 8.8 (SAE)	Throttle Rocker on Left Side Throttle Pedal Support	$ 0,03	4	mm	30	mm	1	$ 0,03
110	Nut, Grade 8.8 (SAE 5)	Throttle Rocker on Left Side Throttle Pedal Support	$ 0,02	4	mm			1	$ 0,02
120	Washer, Grade 8,8 (SAE 5)	Throttle Rocker on Left Side Throttle Pedal Support	$ 0,01	4	mm			2	$ 0,02
130	Bolt,Grade 8.8 (SAE)	Throttle Pedal Supports on Throttle Pedal Axle	$ 0,08	6	mm	35	mm	1	$ 0,08
140	Nut, Grade 8.8 (SAE 5)	Throttle Pedal Supports on Throttle Pedal Axle	$ 0,03	6	mm			1	$ 0,03
150	Washer, Grade 8,8 (SAE 5)	Throttle Pedal Supports on Throttle Pedal Axle	$ 0,01	6	mm			2	$ 0,02
160	Bolt,Grade 8.8 (SAE)	Throttle Pedal Supports on Rail	$ 0,14	8	mm	35	mm	2	$ 0,28
170	Nut, Grade 8.8 (SAE 5)	Throttle Pedal Supports on Rail	$ 0,04	8	mm			2	$ 0,08
180	Washer, Grade 8,8 (SAE 5)	Throttle Pedal Supports on Rail	$ 0,01	8	mm			4	$ 0,04
190	Bolt,Grade 8.8 (SAE)	Throttle Foot Support on Rail	$ 0,08	6	mm	35	mm	2	$ 0,16
200	Nut, Grade 8.8 (SAE 5)	Throttle Foot Support on Rail	$ 0,03	6	mm			2	$ 0,06
210	Washer, Grade 8,8 (SAE 5)	Throttle Foot Support on Rail	$ 0,01	6	mm			4	$ 0,04
220	Bolt,Grade 8.8 (SAE)	Throttle Foot Support on Rail	$ 0,18	6	mm	70	mm	1	$ 0,18
230	Nut, Grade 8.8 (SAE 5)	Throttle Foot Support on Rail	$ 0,03	6	mm			1	$ 0,03
240	Washer, Grade 8,8 (SAE 5)	Throttle Foot Support on Rail	$ 0,01	6	mm			2	$ 0,02
250	Bolt,Grade 8.8 (SAE)	Throttle Foot Support on Rail	$ 0,27	10	mm	40	mm	2	$ 0,54
260	Nut, Grade 8.8 (SAE 5)	Throttle Foot Support on Rail	$ 0,07	10	mm			2	$ 0,14
270	Washer, Grade 8,8 (SAE 5)	Throttle Foot Support on Rail	$ 0,01	10	mm			4	$ 0,04
280	Bolt,Grade 8.8 (SAE)	Overtravel Switch	$ 0,08	6	mm	35	mm	2	$ 0,16
290	Nut, Grade 8.8 (SAE 5)	Overtravel Switch	$ 0,04	10	mm			2	$ 0,08
300	Washer, Grade 8,8 (SAE 5)	Overtravel Switch	$ 0,01	10	mm			4	$ 0,04
								Sub Total	**$ 2,52**

ItemOrder	Tooling	Use	UnitCost	Unit	Quantity	PVF	FractionIncluded	Sub Total
10	Welds - Welding Fixture	Rails Mounts	$ 500,00	point	16	3000	1	$ 2,67
							Sub Total	**$ 2,67**

University	Ecole Centrale de Lyon			**Car #**	81	**Part Cost**	$ 2,04
System	Frame and Body	**FileLink1**				**Qty**	4
Assembly	Pedal Box	**FileLink2**		**FileLink1**			
Part	Front Rails Mounts	**FileLink3**		**FileLink2**		**Extended Cost**	$ 8,18
P/N Base	FR 04001			**FileLink3**			
Suffix	AA						
Details	Front Rails Mounts						

ItemOrder	Material	Use	UnitCost	Size1	Unit1	Size2	Unit2	Area Name	Area	Length	Density	Quantity	Sub Total
10	Steel	Stock material for part	$ 2,25	36,3	mm	73,6	mm	square	2,67E-03	0,003	8 010	1	$ 0,12
												Sub Total	**$ 0,12**

ItemOrder	Process	Use	UnitCost	Unit	Quantity	Multiplier	Mult. Val.	Sub Total
10	Machining Setup, Install and remove	Setup for laser cutting	$ 1,30	unit	1			$ 1,30
20	Laser Cut	Cutout shape	$ 0,01	cm	21	Material - Steel	3	$ 0,62
							Sub Total	**$ 1,92**

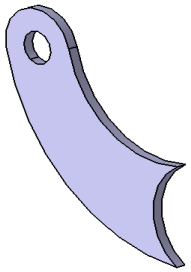

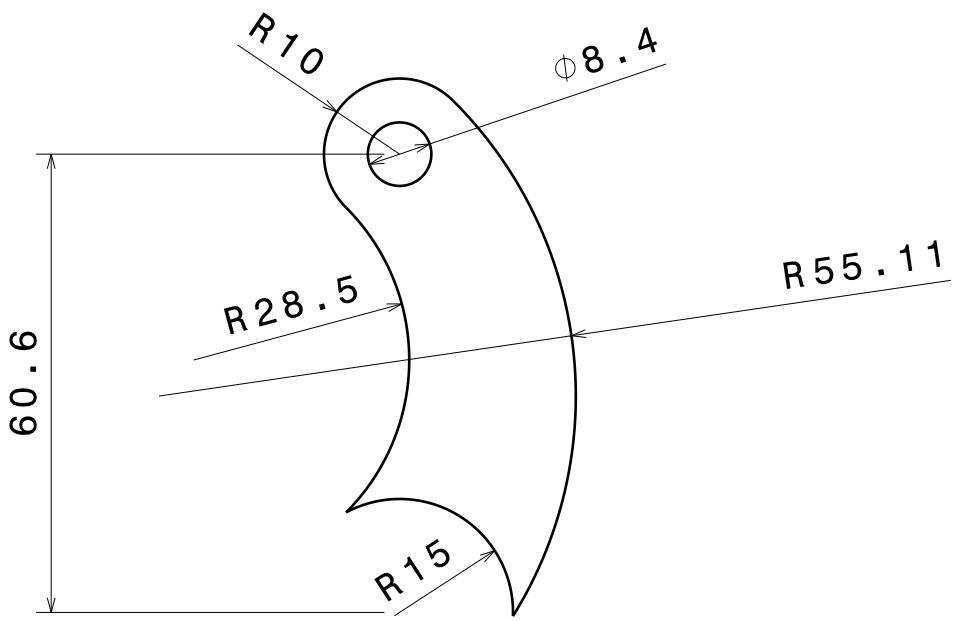

Vue de face

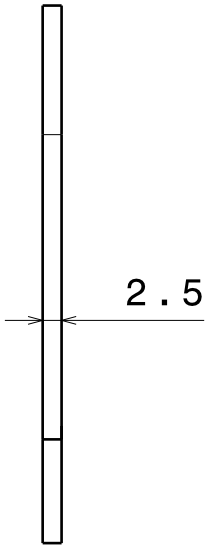

Vue de gauche

Tolérences Générales
ISO 2768 - mK

Taille A4		Ecurie Piston Sport Auto
Dessiné par Luc	Date 21/01/2015	Désignation: Chape Pédalier Avant
Coordonnées lbrossar@ec-lyon.fr 06.59.15.53.71		Quantité 4 / Matériau Acier S235 / Version V1.0
Plan vérifié par CCN 220		Echelle 1:1 / Numéro du plan 15-M-057 / Feuille 1/1

University	Ecole Centrale de Lyon			**Car #**	81	**Part Cost**	$ 1,95
System	Frame and Body	**FileLink1**				**Qty**	4
Assembly	Nom de l'assemblage	**FileLink2**		**FileLink1**			
Part	Rear Rails Mount	**FileLink3**		**FileLink2**		**Extended Cost**	$ 7,79
P/N Base	FR 04002			**FileLink3**			
Suffix	AA						
Details	Rear Rail Mount						

ItemOrder	Material	Use	UnitCost	Size1	Unit1	Size2	Unit2	Area Name	Area	Length	Density	Quantity	Sub Total
10	Steel	Stock material for part	$ 2,25	23	mm	65	mm	square	1,50E-03	0,003	8 010	1	$ 0,07
												Sub Total	**$ 0,07**

ItemOrder	Process	Use	UnitCost	Unit	Quantity	Multiplier	Mult. Val.	Sub Total
10	Machining Setup, Install and remove	Setup for laser cutting	$ 1,30	unit	1			$ 1,30
20	Laser Cut	Cutout shape	$ 0,01	cm	19	Material - Steel	3	$ 0,58
							Sub Total	**$ 1,88**

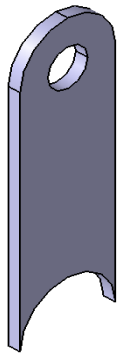

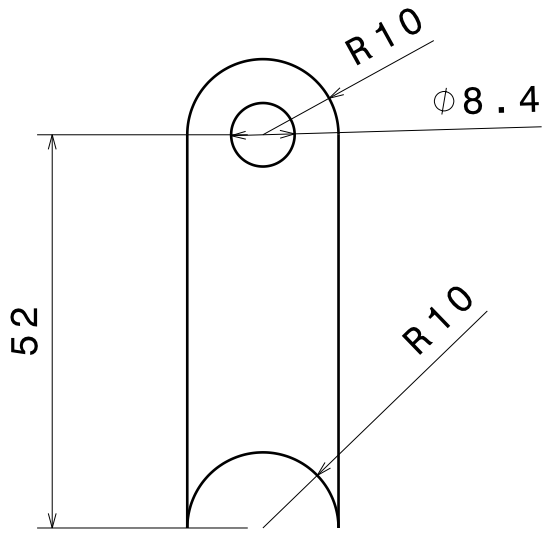

Vue de face

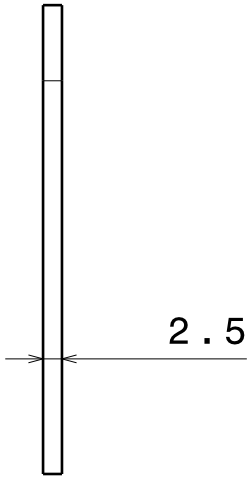

Vue de gauche

Tolérence Générale
ISO 2768 - mK

Taille A4		Ecurie Piston Sport Auto
Dessiné par Luc	Date 21/01/2015	Désignation Chape Pédalie Arrière
Coordonnées lbrossar@ec-lyon.fr 06.59.15.53.71		Quantité 4 / Matériau Acier S235 / Version V1.0
Plan vérifié par CCN 222		Echelle 1:1 / Numéro du plan 15-M-058 / Feuille 1/1

University	Ecole Centrale de Lyon			**Car #**	81	**Part Cost**	$ 15,15
System	Frame and Body	**FileLink1**				**Qty**	2
Assembly	Pedal Assembly	**FileLink2**		**FileLink1**			
Part	Pedal Rail	**FileLink3**		**FileLink2**		**Extended Cost**	$ 30,30
P/N Base	FR 04003			**FileLink3**			
Suffix	AA						
Details	Rail for Pedal fixing						

ItemOrder	Material	Use	UnitCost	Size1	Unit1	Size2	Unit2	Area Name	Area	Length	Density	Quantity	Sub Total
10	Aluminium	Aluminium square tube material used as rail stock	$ 4,20	25	mm	25	mm	Square 2mm thick, 25mm x 25mm	0,000096	0,41	2710	1	$ 0,45
												Sub Total	**$ 0,45**

ItemOrder	Process	Use	UnitCost	Unit	Quantity	Multiplier	Mult. Val.	Sub Total
10	Drilled holes < 25.4 mm dia.	Adjustable mounting and weigth reduction	$ 0,35	hole	42			$ 14,70
							Sub Total	**$ 14,70**

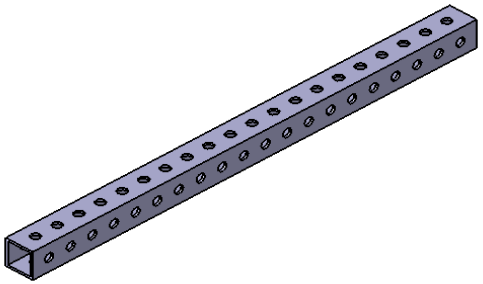

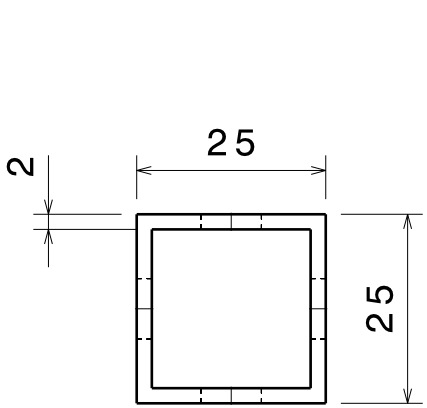

Vue de droite

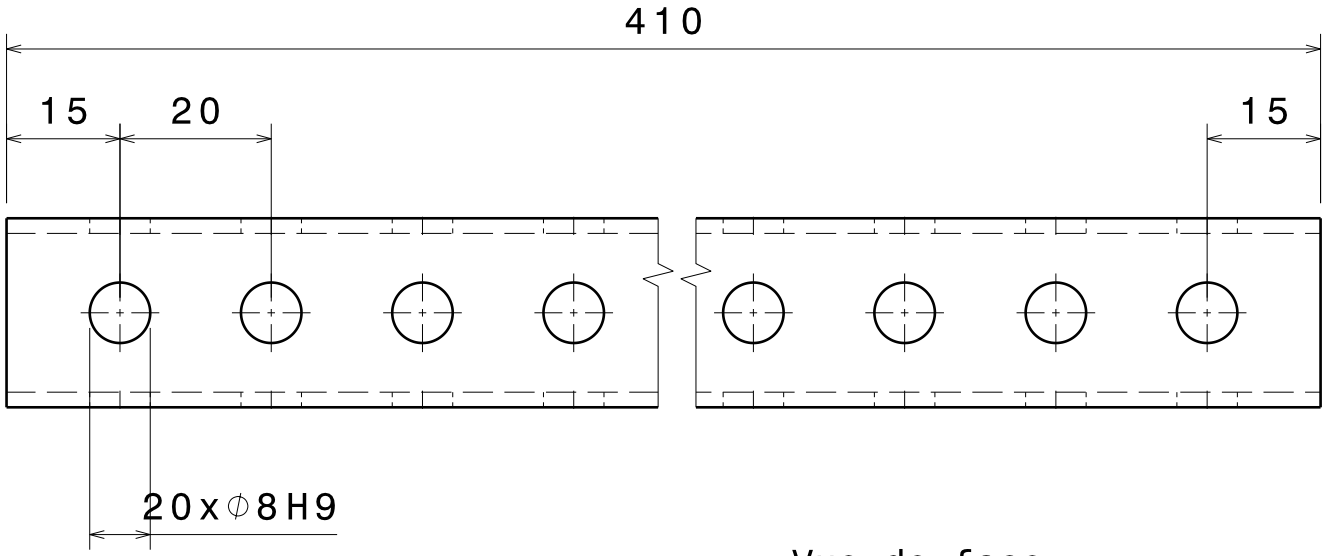

Vue de face

Tolérences Générale ISO 2768 - mK

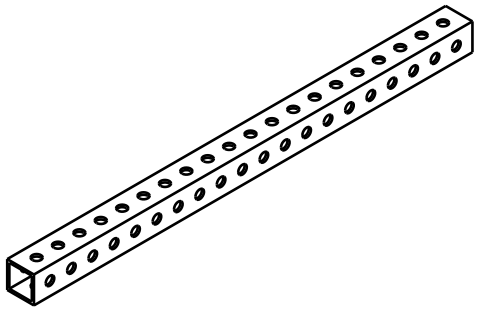

Vue isométrique
Echelle : 1:5

Taille A4		Ecurie Piston Sport Auto
Dessiné par Luc	Date 21/01/2015	Désignation Rail Pédalier
Coordonnées lbrossar@ec-lyon.fr 06.59.15.53.71		Quantité 2 / Matériau Aluminium 2017 / Version V1.0
Plan vérifié par CCN 224		Echelle 1:1 / Numéro du plan 15-B-067 / Feuille 1/1

University	Ecole Centrale de Lyon			**Car #**	81	**Part Cost**	$ 11,96
System	Frame and Body	**FileLink1**				**Qty**	1
Assembly	Nom de l'assemblage	**FileLink2**		**FileLink1**			
Part	Throttle Pedal	**FileLink3**		**FileLink2**		**Extended Cost**	$ 11,96
P/N Base	FR 04004			**FileLink3**			
Suffix	AA						
Details							

ItemOrder	Material	Use	UnitCost	Size1	Unit1	Size2	Unit2	Area Name	Area	Length	Density	Quantity	Sub Total
10	Aluminium, normal	Material for pedal	$ 4,20	38	mm	24	mm	Rectangular area	9,E-04	0,24	2 710,00	1	$ 2,49
												Sub Total	**$ 2,49**

ItemOrder	Process	Use	UnitCost	Unit	Quantity	Multiplier	Mult. Val.	Sub Total
10	Machining Setup, Install and remove	Install and remove part from machine	$ 1,30	unit	1			$ 1,30
20	Machining	Material removal - outer profil an height	$ 0,04	cm^3	151,76	Material - Aluminum	1	$ 6,07
30	Drilled holes < 25.4 mm dia.	Pedal Mount Hole	$ 0,35	hole	1			$ 0,35
40	Reemed hole	Reamed pedal mount hole for bushing	$ 0,35	hole	1			$ 0,35
50	Holes for throttle actuation	Pedal Mount Hole	$ 0,35	hole	2			$ 0,70
60	Holes for pedal stop	Pedal Mount Hole	$ 0,35	hole	2			$ 0,70
							Sub Total	**$ 9,47**

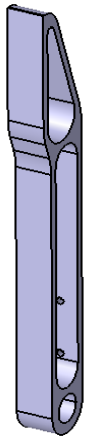

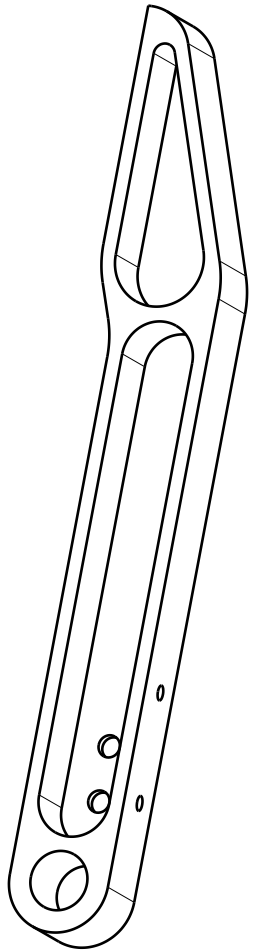

Vue isométrique

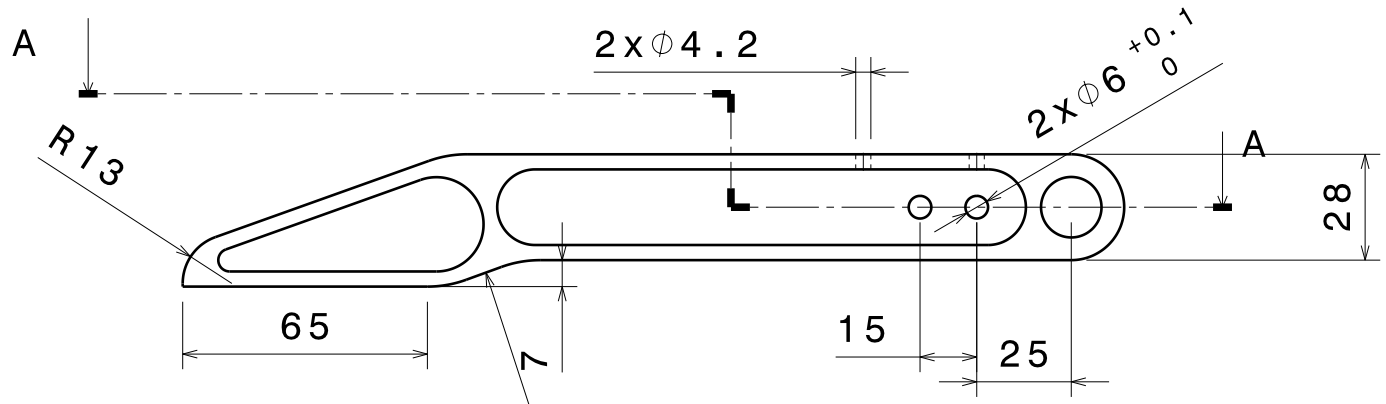

Vue de face

Evidement libre
épaisseur
minimale de 4mm

Congés et raccordements
laissés libres

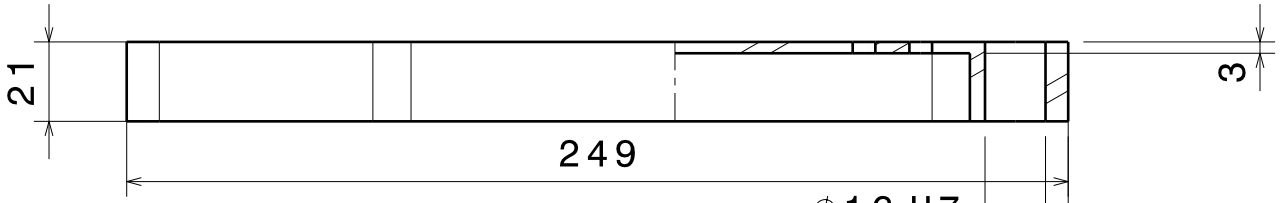

Coupe A-A

Tolérances générales ISO 2768 - mK

Taille A4		Ecurie Piston Sport Auto
Dessiné par Luc	Date 01/02/2015	Désignation Pédale d'Accélérateur
Coordonnées lbrossar@ec-lyon.fr 06.59.15.53.71		Quantité 1 / Matériau Aluminium 2017 / Version 0.9
Plan vérifié par SCU 226		Echelle 1:2 / Numéro du plan 15-MU-002 / Feuille 1/1

University	Ecole Centrale de Lyon			**Car #**	81	**Part Cost**	$ 1,42
System	Frame and Body	**FileLink1**				**Qty**	2
Assembly	Pedal Assembly	**FileLink2**		**FileLink1**			
Part	Throttle Pedal Bushing	**FileLink3**		**FileLink2**		**Extended Cost**	$ 2,83
P/N Base	FR 04005			**FileLink3**			
Suffix	AA						
Details	Bronze Bushing used for throttle pedal pivots						

ItemOrder	Material	Use	UnitCost	Size1	Unit1	Size2	Unit2	Area Name	Area	Length	Density	Quantity	Sub Total
10	Bronze	Stock material for bushings	$ 2,20	12,5	mm		mm	Round area, 12.5 mm radius	1,23E-04	0,013	2 710,00	1	$ 0,01
												Sub Total	**$ 0,01**

ItemOrder	Process	Use	UnitCost	Unit	Quantity	Multiplier	Mult. Val.	Sub Total
10	Machining Setup, Install and remove	Install and remove part from machine	$ 1,30	unit	1			$ 1,30
20	Drilled holes < 25.4 mm dia.	Machining of the bushing (turning)	$ 0,04	cm^3	2	Material-Bronze	1,33	0,11
							Sub Total	**$ 1,41**

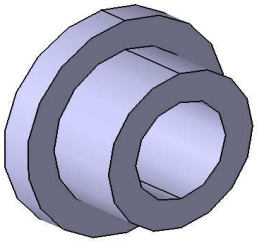

University	Ecole Centrale de Lyon			**Car #**	81	**Part Cost**	$ 1,86
System	Frame and Body	**FileLink1**				**Qty**	2
Assembly	Pedal Assembly	**FileLink2**		**FileLink1**			
Part	Throttle Pedal Axle	**FileLink3**		**FileLink2**		**Extended Cost**	$ 3,72
P/N Base	FR 04006			**FileLink3**			
Suffix	AA						
Details	Steel axle used for throttle pedal pivots						

ItemOrder	Material	Use	UnitCost	Size1	Unit1	Size2	Unit2	Area Name	Area	Length	Density	Quantity	Sub Total
10	Steel, Alloy	Optional Text	$ 2,25	13	mm			Round area, 6,5mm radius	1,E-04	0,03	7 800,00	1	$ 0,07
												Sub Total	**$ 0,07**

ItemOrder	Process	Use	UnitCost	Unit	Quantity	Multiplier	Mult. Val.	Sub Total
10	Machining setup, and remove	Install and remove part from machine	$ 1,30	unit	1			$ 1,30
20	Machining	Turning	$ 0,04	cm^3	4,1	Material - Steel	3	$ 0,49
							Sub Total	**$ 1,79**

University	Ecole Centrale de Lyon			**Car #**	81	**Part Cost**	$ 4,47
System	Frame and Body	**FileLink1**				**Qty**	1
Assembly	Pedal Assembly	**FileLink2**		**FileLink1**			
Part	Throttle Pedal Stop	**FileLink3**		**FileLink2**		**Extended Cost**	$ 4,47
P/N Base	FR 04007			**FileLink3**			
Suffix	AA						
Details							

ItemOrder	Material	Use	UnitCost	Size1	Unit1	Size2	Unit2	Area Name	Area	Length	Density	Quantity	Sub Total
10	Aluminium, normal	Material for part	$ 4,20	36	mm	23	mm	Rectangular area 23mm x 36mm	8,28E-04	0,081	2 710,00	1	$ 0,76
												Sub Total	**$ 0,76**

ItemOrder	Process	Use	UnitCost	Unit	Quantity	Multiplier	Mult. Val.	Sub Total
10	Machining setup, and remove	Install and remove part from machine	$ 1,30	unit	1			$ 1,30
20	Machining	Outer profil, height, and first hole	$ 0,04	cm^3	33	Material - Aluminum	1	$ 1,32
30	Machining Setup, Change	Setup for next machining step	$ 0,65	Unit	1			$ 0,65
40	Machining	Material removal and slots for pedal fixation	$ 0,04	cm^3	10,92	Material - Aluminum	1	$ 0,44
							Sub Total	**$ 3,71**

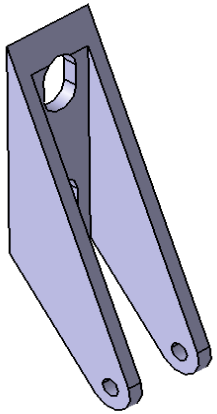

Tolerances Générale
ISO 2768 - mK

Les angles sont donnés
pour indications.

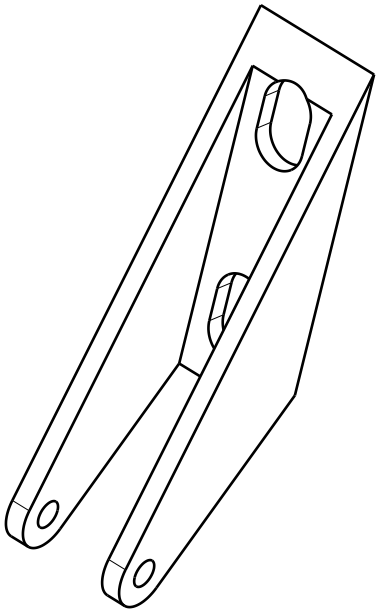

Vue isométrique

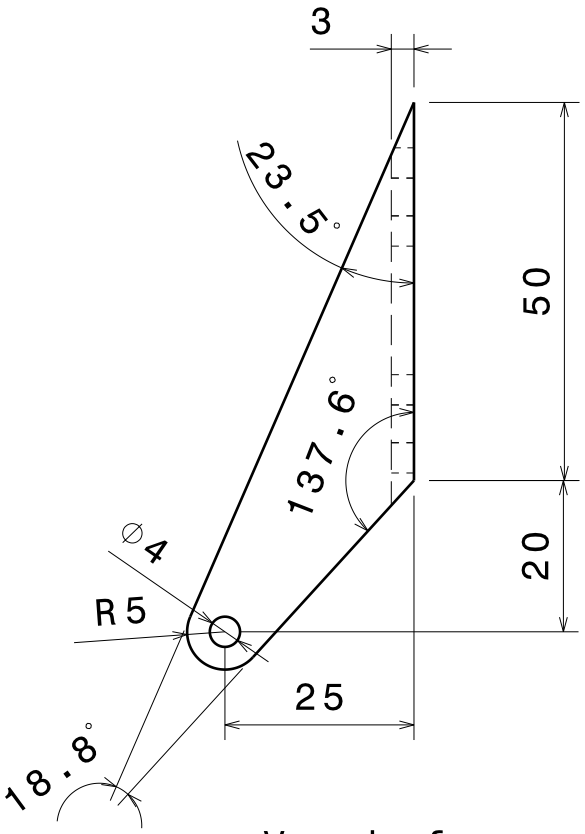

Vue de face

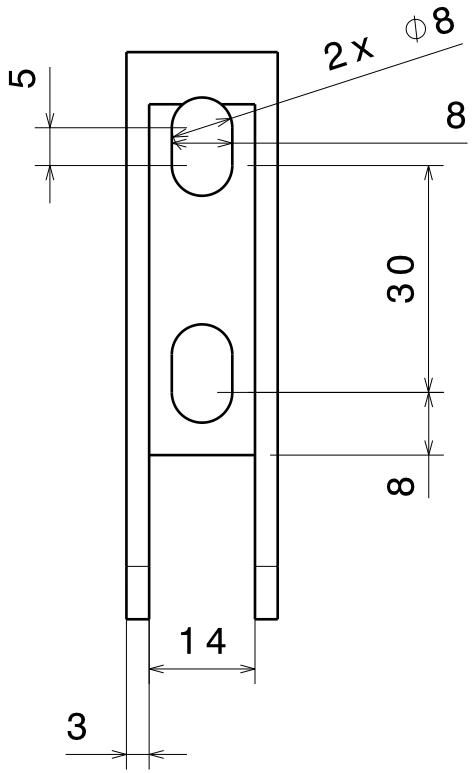

Vue de dessus

Taille A4		Ecurie Piston Sport Auto
Dessiné par Luc	Date 06/01/2015	Désignation: Butée Négative accel
Coordonnées lbrossar@ec-lyon.fr 06.59.15.53.71		Quantité 1 / Matériau Aluminium au choix / Version 1.0
Plan vérifié par SCU 230		Echelle 1:1 / Numéro du plan 15-MU-010 / Feuille 1/1

University	Ecole Centrale de Lyon			**Car #**	81	**Part Cost**	$ 1,33
System	Frame and Body	**FileLink1**				**Qty**	2
Assembly	Pedal Assembly	**FileLink2**		**FileLink1**			
Part	Throttle Pedal Stop Cylinder	**FileLink3**		**FileLink2**		**Extended Cost**	$ 2,65
P/N Base	FR 04008			**FileLink3**			
Suffix	AA						
Details							

ItemOrder	Material	Use	UnitCost	Size1	Unit1	Size2	Unit2	Area Name	Area	Length	Density	Quantity	Sub Total
10	Aluminium, normal	Tube for part	$ 4,20	5	mm	2	mm	Tube 5mmx2mm	8,E-05	0,03	2 710,00	1	$ 0,03
												Sub Total	**$ 0,03**

ItemOrder	Process	Use	UnitCost	Unit	Quantity	Multiplier	Mult. Val.	Sub Total
10	Tube cut	Install and remove part from machine	$ 0,15	cm	1			$ 1,30
							Sub Total	**$ 1,30**

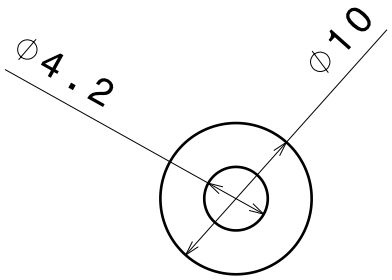

Vue de face
Echelle : 2:1

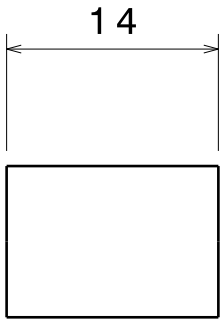

Vue de gauche
Echelle : 2:1

Tolérances Générales ISO 2768-mK

Taille A4		Ecurie Piston Sport Auto
Dessiné par Luc	Date 07/02/2015	Désignation Cylindre butée Accel
Coordonnées lbrossar@ec-lyon.fr 06.59.15.53.71		Quantité 1 / Matériau Aluminium au choix / Version 1.0
Plan vérifié par SCU 232		Echelle 1:1 / Numéro du plan 15-MU-003 / Feuille 1/1

University	Ecole Centrale de Lyon			**Car #**	81	**Part Cost**	$ 1,83
System	Frame and Body	**FileLink1**				**Qty**	1
Assembly	Pedal Assembly	**FileLink2**		**FileLink1**			
Part	Throttle actuation brace	**FileLink3**		**FileLink2**		**Extended Cost**	$ 1,83
P/N Base	FR 04009			**FileLink3**			
Suffix	AA						
Details							

ItemOrder	Material	Use	UnitCost	Size1	Unit1	Size2	Unit2	Area Name	Area	Length	Density	Quantity	Sub Total
10	Aluminium, normal	Material for part	$ 25,00	19	mm	34	mm	Rectangular area 19mm x 34mm	6,46E-04	0,009	2 710,00	1	$ 0,39
												Sub Total	**$ 0,39**

ItemOrder	Process	Use	UnitCost	Unit	Quantity	Multiplier	Mult. Val.	Sub Total
10	Machining setup, and remove	Install and remove part from machine	$ 1,30	unit	1			$ 1,30
20	Machining	Outer profil, height, and first hole	$ 0,04	cm^3	3,5	Material - Aluminum	1	$ 0,14
							Sub Total	**$ 1,44**

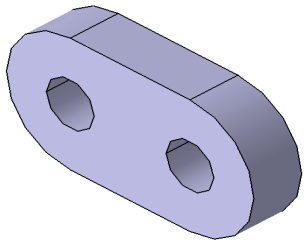

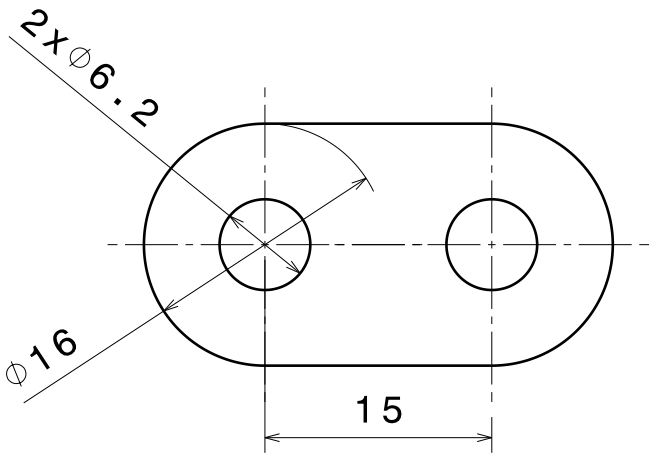

Vue de face

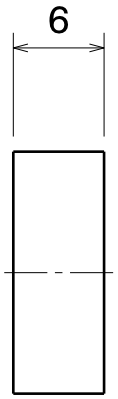

Vue de gauche

Tolérances Générales ISO 2768 - mK

Taille A4		Ecurie Piston Sport Auto
Dessiné par Luc	Date 02/02/2015	Désignation Entretoise tirage cable accel
Coordonnées lbrossar@ec-lyon.fr 06.59.15.53.71		Quantité 1 / Matériau Aluminium au choix / Version 1.0
Plan vérifié par SCU 234		Echelle 2:1 / Numéro du plan 15-MU-008 / Feuille 1/1

University	Ecole Centrale de Lyon			**Car #**	81	**Part Cost**	$ 3,19
System	Frame and Body	**FileLink1**				**Qty**	1
Assembly	Pedal Assembly	**FileLink2**		**FileLink1**			
Part	Throttle Actuation	**FileLink3**		**FileLink2**		**Extended Cost**	$ 3,19
P/N Base	FR 04010			**FileLink3**			
Suffix	AA						
Details							

ItemOrder	Material	Use	UnitCost	Size1	Unit1	Size2	Unit2	Area Name	Area	Length	Density	Quantity	Sub Total
10	Steel	Stock material for part	$ 2,25	40,3	mm	112	mm	square	4,51E-03	0,003	8 010	1	$ 0,20
												Sub Total	**$ 0,20**

ItemOrder	Process	Use	UnitCost	Unit	Quantity	Multiplier	Mult. Val.	Sub Total
10	Machining Setup, Install and remove	Setup for laser cutting	$ 1,30	unit	1			$ 1,30
20	Laser Cut	Cutout shape	$ 0,01	cm	31	Material - Steel	3	$ 0,94
30	Sheet metal bends	Bends	$ 0,25	unit	3			$ 0,75
							Sub Total	**$ 2,99**

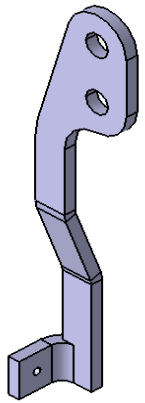

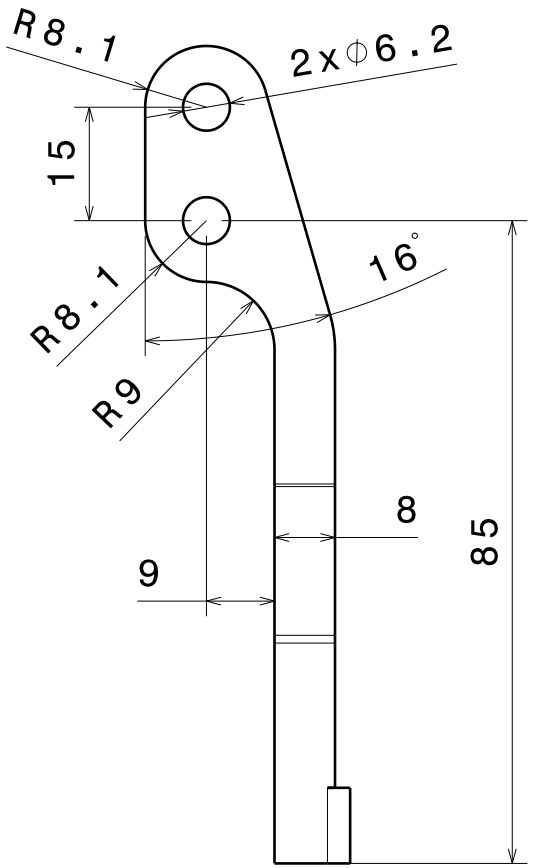

Vue de face
Echelle : 1:1

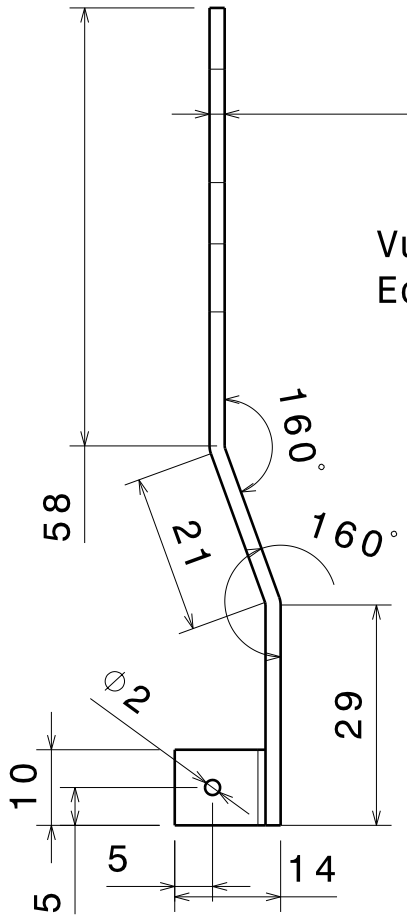

Vue de gauche
Echelle : 1:1

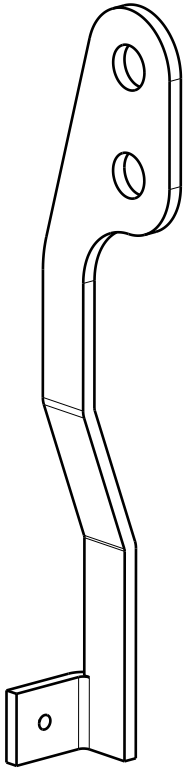

Vue isométrique
Echelle : 1:1

Tolérances générales
ISO 2768 - mK

Taille A4		Ecurie Piston Sport Auto
Dessiné par Luc BROSSARD	Date 13/03/2015	Désignation: Tirage câble
Coordonnées lbrossar@ec-lyon.fr 06.59.15.53.71		Quantité 2 / Matériau Acier au choix / Version 1.0
Plan vérifié par JGR 236		Echelle 1:1 / Numéro du plan 15-M-063 / Feuille 1/1

University	Ecole Centrale de Lyon			**Car #**	81	**Part Cost**	$ 11,80
System	Frame and Body	**FileLink1**				**Qty**	1
Assembly	Pedal Assembly	**FileLink2**		**FileLink1**			
Part	Left Side Throttle Pedal Support	**FileLink3**		**FileLink2**		**Extended Cost**	$ 11,80
P/N Base	FR 04011			**FileLink3**			
Suffix	AA						
Details							

ItemOrder	Material	Use	UnitCost	Size1	Unit1	Size2	Unit2	Area Name	Area	Length	Density	Quantity	Sub Total
10	Steel	Stock material for part	$ 2,25	100	mm	60	mm	square	6,00E-03	0,002	8 010	1	$ 0,22
10	Steel	Stock material for part	$ 2,25	33	mm	20	mm	square	6,60E-04	0,002	8 010	1	$ 0,02
												Sub Total	**$ 0,24**

ItemOrder	Process	Use	UnitCost	Unit	Quantity	Multiplier	Mult. Val.	Sub Total
10	Machining, Install and Remove	First Part Installation	$ 1,60	unit	1			$ 1,60
20	Laser Cutting	First Part Cutting	$ 0,04	cm	66,9	Material - Steel	3	$ 8,03
10	Machining, Install and Remove	Second Part Installation	$ 1,60	unit	1			$ 1,60
20	Laser Cutting	Seconf Part Cutting	$ 0,04	cm	10,2	Material - Steel	3	$ 1,22
30	Sheet metal bends	Bends on the first part	$ 0,25	unit	3			$ 0,75
10	Weld	Welding Second Part on First Part	$ 0,15	cm	3			$ 0,45
							Sub Total	**$ 11,23**

ItemOrder	Tooling	Use	UnitCost	Unit	Quantity	PVF	FractionIncluded	Sub Total
10	Welds - Welding Fixture	Exemple de Tooling	$ 500,00	point	2	3000	1	$ 0,33
							Sub Total	**$ 0,33**

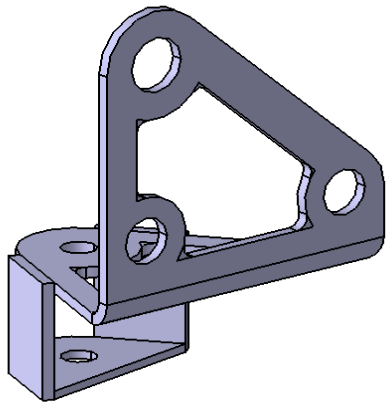

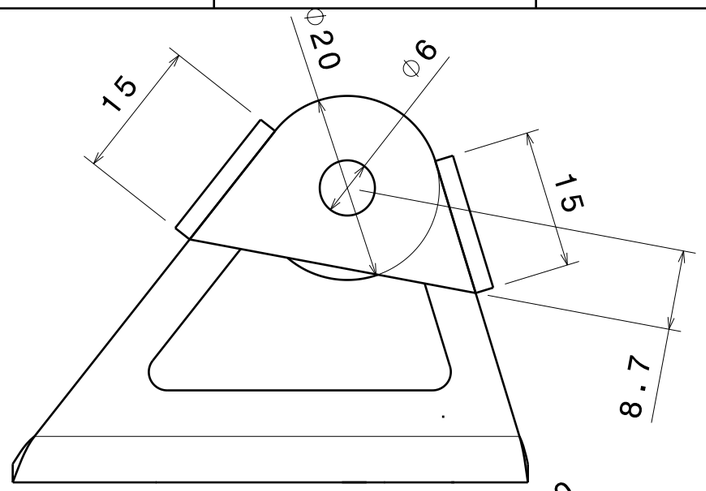

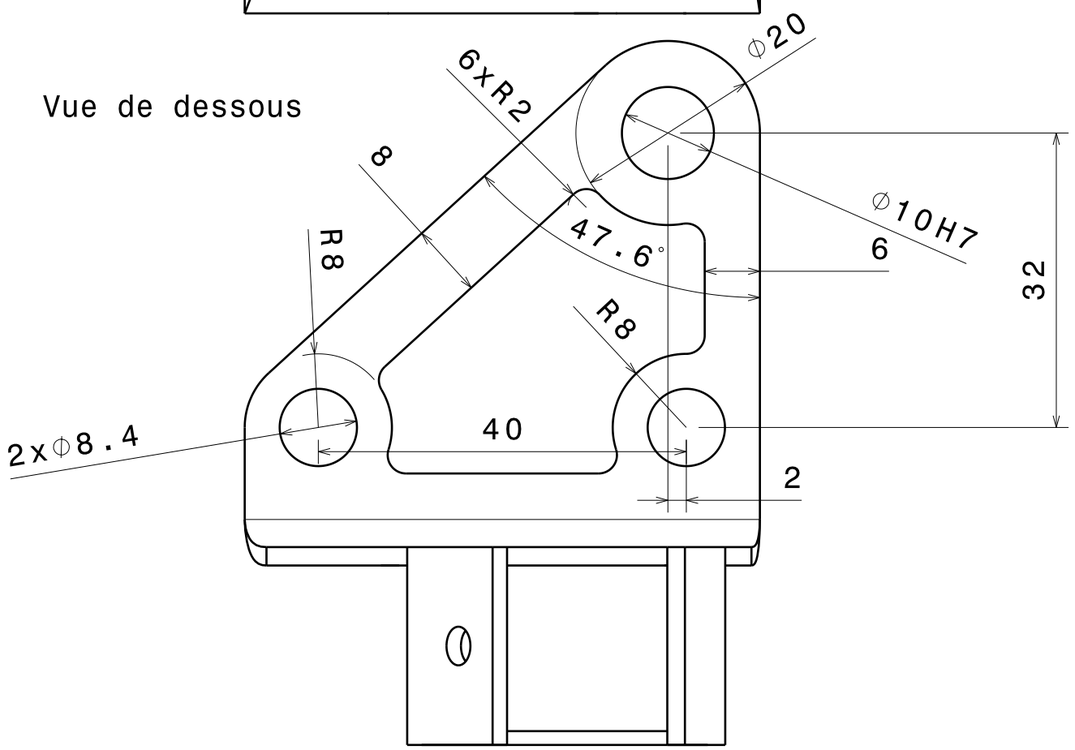

Vue de face

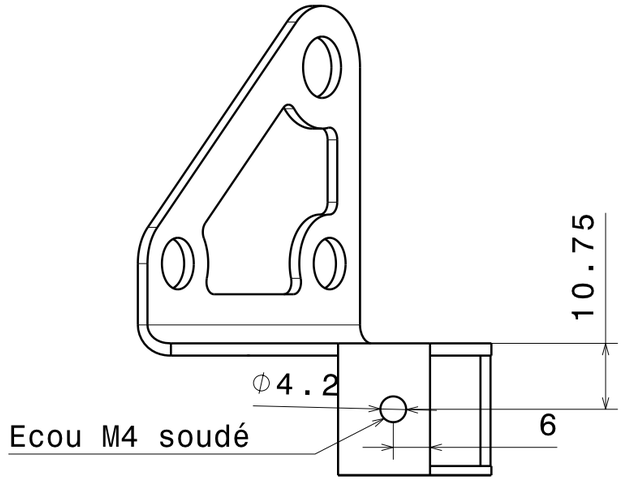

Vue auxiliaire
Echelle : 1:1

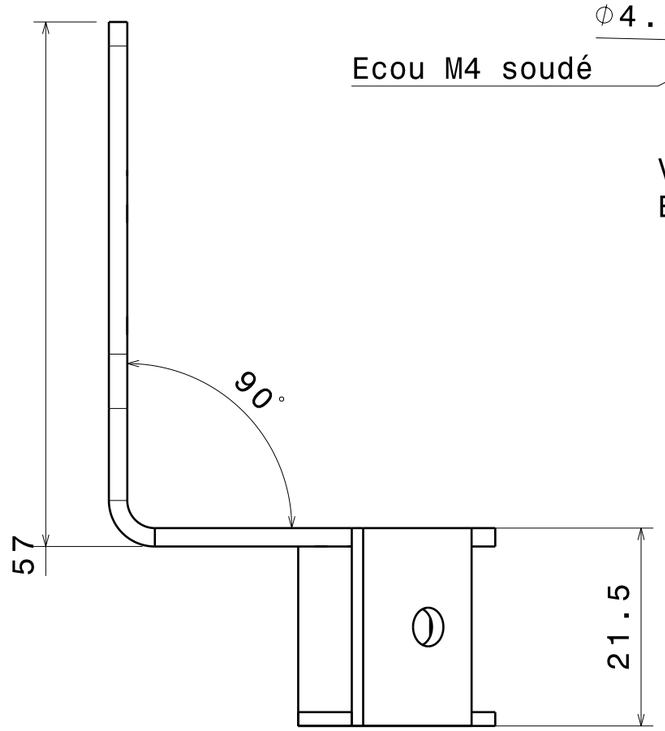

Vue de gauche

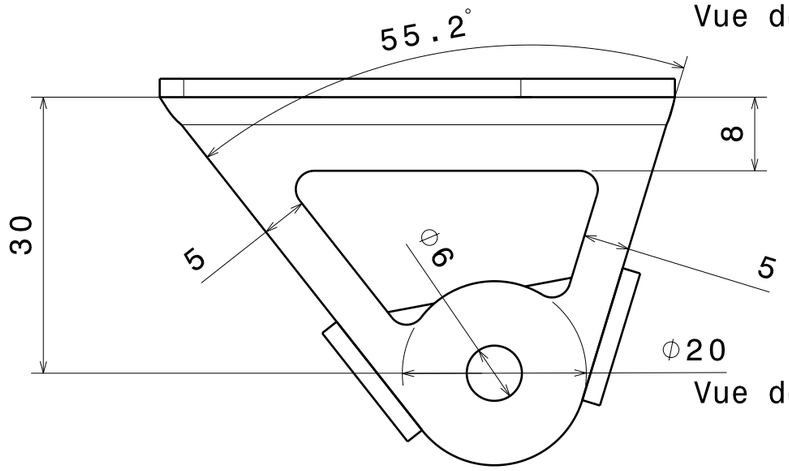

Vue de dessus

Taille A3		Ecurie Piston Sport Auto
Dessiné par Luc	Date 30/01/2015	Désignation Support Basculeur accélérateur
Coordonnées lbrossar@ec-lyon.fr 06.59.15.53.71		Quantité 1 / Matériau Acier S235 / Version 0.9
Plan vérifié par XXX		Echelle 3:2 / Numéro du plan XXX / Feuille 1/1

University	Ecole Centrale de Lyon			**Car #**	81	**Part Cost**	$ 8,21
System	Frame and Body	**FileLink1**				**Qty**	1
Assembly	Pedal Assembly	**FileLink2**		**FileLink1**			
Part	Throttle Rocker	**FileLink3**		**FileLink2**		**Extended Cost**	$ 8,21
P/N Base	FR 04012			**FileLink3**			
Suffix	AA						
Details							

ItemOrder	Material	Use	UnitCost	Size1	Unit1	Size2	Unit2	Area Name	Area	Length	Density	Quantity	Sub Total
10	Steel, Alloy	Optional Text	$ 2,25	21	mm	17	mm	Rectangular area 17mm x 21mm	3,57E-04	0,086	7 800,00	1	$ 0,54
												Sub Total	**$ 0,54**

ItemOrder	Process	Use	UnitCost	Unit	Quantity	Multiplier	Mult. Val.	Sub Total
10	Machining setup, and remove	Install and remove part from machine	$ 1,30	unit	1			$ 1,30
20	Machining	Outer profil, height, and first hole	$ 0,04	cm^3	141,785	Material - Steel	1	$ 5,67
30	Drilled holes < 25.4 mm dia.	Pedal actuation cable and throttle actuation	$ 0,35	hole	2			$ 0,70
							Sub Total	**$ 7,67**

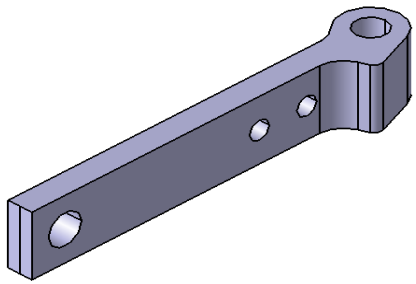

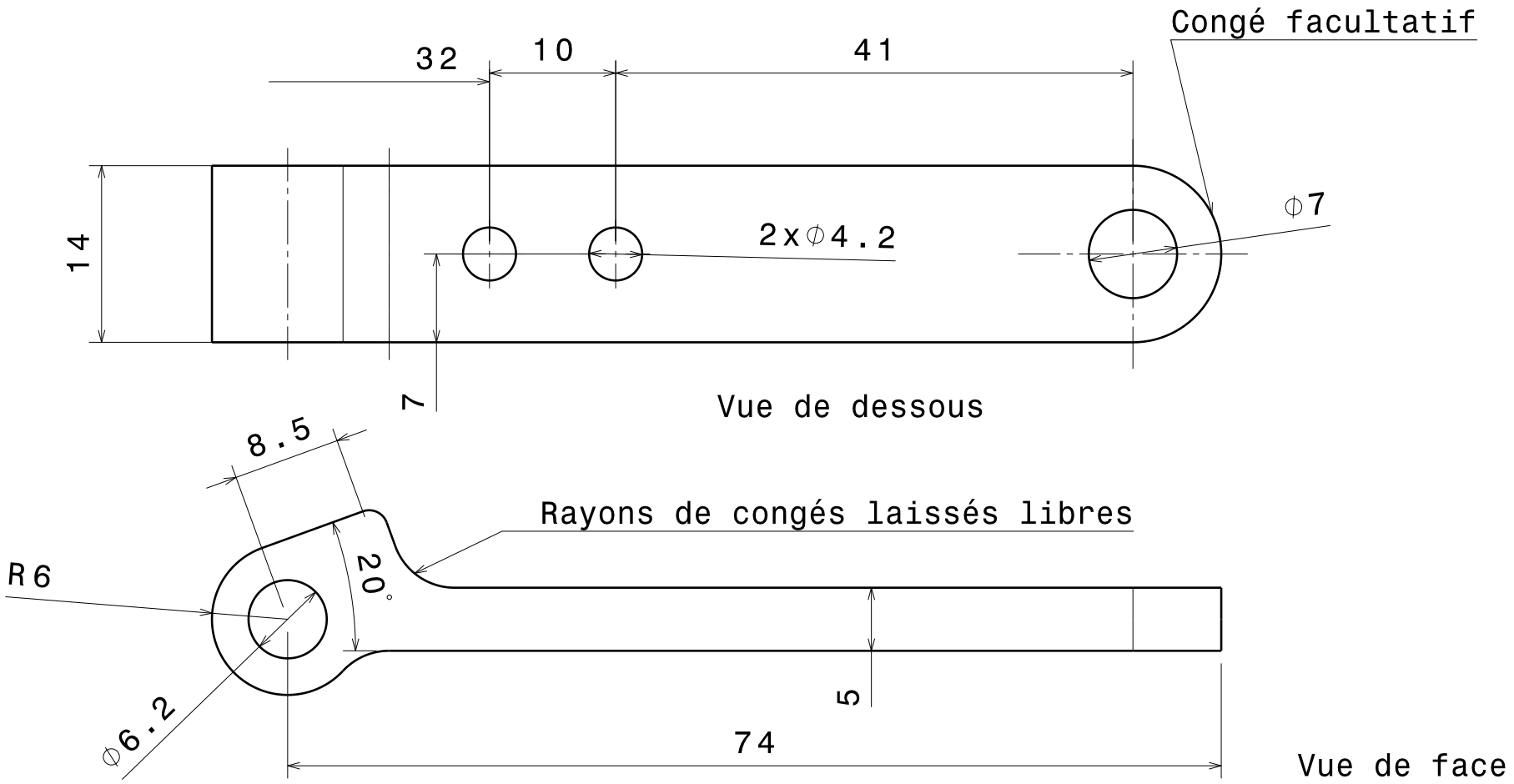

Tolérances Générales
ISO 2768 - mK

Taille A4		Ecurie Piston Sport Auto
Dessiné par Luc	Date 02/02/2015	Désignation Basculeur accel
Coordonnées lbrossar@ec-lyon.fr 06.59.15.53.71		Quantité 1 / Matériau Acier S235 / Version 1.0
Plan vérifié par SCU 240		Echelle 2:1 / Numéro du plan 15-MU-004 / Feuille 1/1

University	Ecole Centrale de Lyon			**Car #**	81	**Part Cost**	$ 3,71
System	Frame and Body	**FileLink1**				**Qty**	1
Assembly	Pedal Assembly	**FileLink2**		**FileLink1**			
Part	Right Side Throttle Pedal Support	**FileLink3**		**FileLink2**		**Extended Cost**	$ 3,71
P/N Base	FR 04013			**FileLink3**			
Suffix	AA						
Details							

ItemOrder	Material	Use	UnitCost	Size1	Unit1	Size2	Unit2	Area Name	Area	Length	Density	Quantity	Sub Total
10	Steel, Alloy	Optional Text	$ 2,25	73,5	mm	125	mm	Rectangular area 125mm x 73,5mm	9,19E-03	0,00	7 800,00	1	$ 0,32
												Sub Total	**$ 0,32**

ItemOrder	Process	Use	UnitCost	Unit	Quantity	Multiplier	Mult. Val.	Sub Total
10	Machining Setup, Install and remove	Setup for laser cutting	$ 1,30	unit	1			$ 1,30
20	Laser Cut	Cutout shape	$ 0,01	cm	53	Material - Steel	3	$ 1,59
30	Sheet metal bends	Bends	$ 0,25	bend	2			$ 0,50
							Sub Total	**$ 3,39**

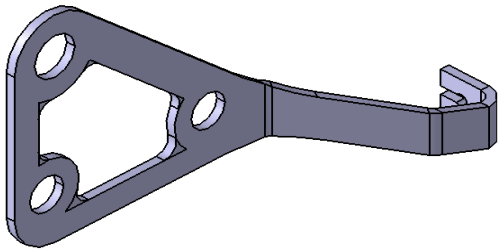

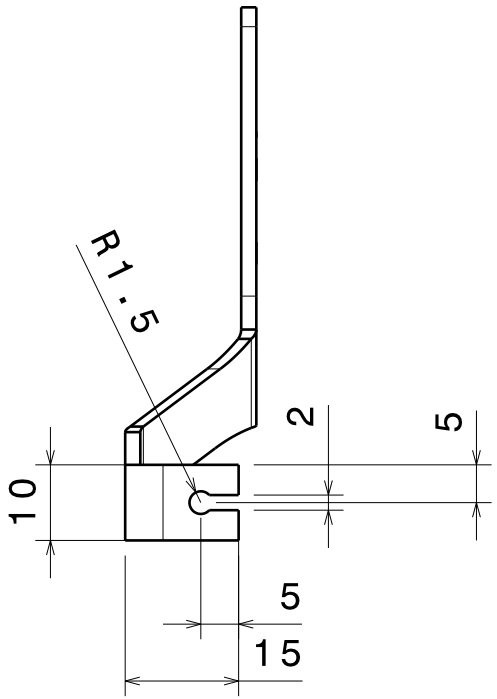

Vue de droite

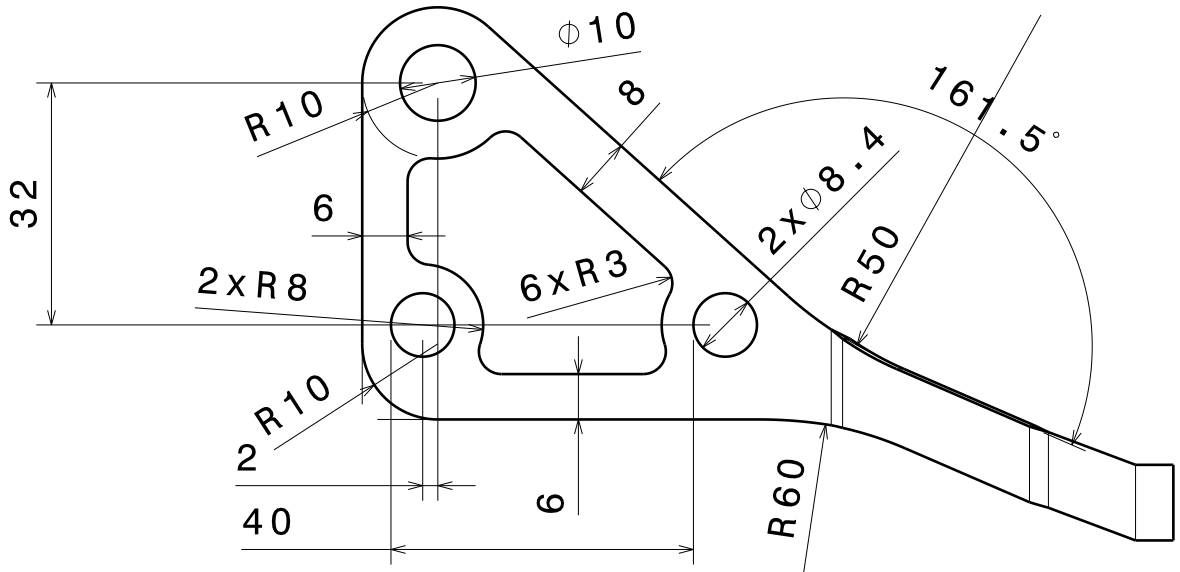

Vue de face

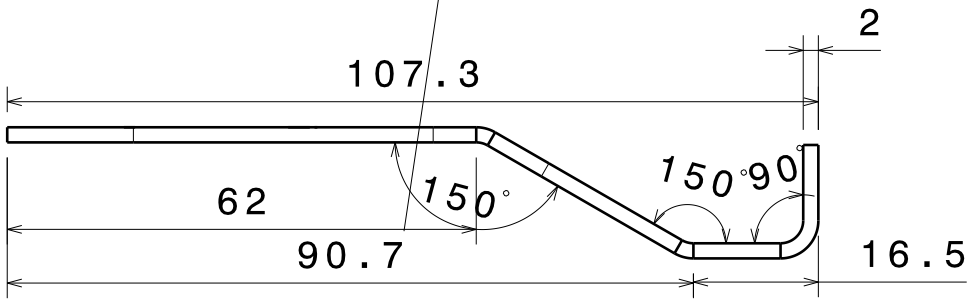

Vue de dessus

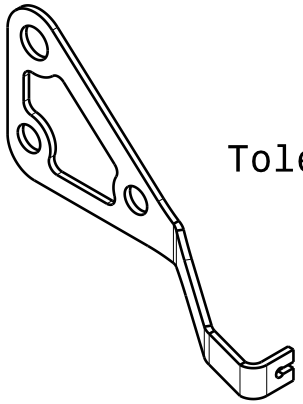

Vue isométrique
Echelle : 1:2

Tolérances Générales ISO 2768-mK

Taille A4		Ecurie Piston Sport Auto
Dessiné par Luc	Date 16/03/2015	Désignation: Support accel droite
Coordonnées lbrossar@ec-lyon.fr 06.59.15.53.71		Quantité 1 / Matériau Acier au choix / Version 1.0
Plan vérifié par CCN 242		Echelle 1:1 / Numéro du plan 15-M-061 / Feuille 1/1

University	Ecole Centrale de Lyon			**Car #**	81	**Part Cost**	$ 4,84
System	Body and Frame	**FileLink1**				**Qty**	1
Assembly	Pedal Assembly	**FileLink2**		**FileLink1**			
Part	Throttle Foot Support	**FileLink3**		**FileLink2**		**Extended Cost**	$ 4,84
P/N Base	FR 04014			**FileLink3**			
Suffix	AA						
Details	Carbon Pannel for the driver's foot						

ItemOrder	Material	Use	UnitCost	Size1	Unit1	Size2	Unit2	Area Name	Area	Length	Density	Quantity	Sub Total
10	Carbon Fiber, 1 Ply	Composite	$ 200,00	0,001665	kg				0,00500			2	$ 0,67
20	Glass Fiber, 1 Ply	Composite	$ 100,00	0,001665	kg				0,00500			1	$ 0,17
30	Structural Foam	Composite	$ 125,00	0,001125	kg				0,00500		0,08	1	$ 0,14
												Sub Total	**0,973125**

ItemOrder	Process	Use	UnitCost	Unit	Quantity	Multiplier	Mult. Val.	Sub Total
10	Lamination, Manual	Lamination of the 4 plys and the foam	$ 35,00	m²	0,00500	Repeat 5	5	$ 0,88
20	Resin application, Manual	Resin application on the 4 plys	$ 5,00	m²	0,00500	Repeat 4	4	$ 0,10
40	Vacuum Form		$ 10,00	m²	0,00500			$ 0,05
50	Cure, Room Temperature	Curing	$ 10,00	m²	0,00500			$ 0,05
60	Machining Setup, Install and remove	Setup for machining	$ 1,30	unit	1			$ 1,30
70	Waterjet Cut	Cutting a passage for Throttle actuation	$ 0,01	cm	4,3	Material - Composite	2	$ 0,09
80	Drilled holes < 25.4 mm dia.	Holes for fixing	$ 0,35	unit	2	Material - Composite	2	$ 1,40
							Sub Total	**$ 3,86**

ItemOrder	Tooling	Use	UnitCost	Unit	Quantity	PVF	FracIncld	Sub Total
Lamination	Lamination - Flat Panel Tool	Mold for all plates	$ 1 500,00	m²	0,00500	3000	1	$ 0,00
							Sub Total	**$ 0,00**

University	Ecole Centrale de Lyon			**Car #**	81	**Part Cost**	$ 76,73
System	Body and Frame	**FileLink1**				**Qty**	1
Assembly	Pedal Assembly	**FileLink2**		**FileLink1**			
Part	Brake Pedal	**FileLink3**		**FileLink2**		**Extended Cost**	$ 76,73
P/N Base	FR 04015			**FileLink3**			
Suffix	AA						
Details	Brake Pedal						

ItemOrder	Material	Use	UnitCost	Size1	Unit1	Size2	Unit2	Area Name	Area	Length	Density	Quantity	Sub Total
10	Aluminium, normal	Material for pedal	$ 25,00	38	mm	62	mm	Rectangular area	2,E-03	0,29	2 710,00	1	$ 45,97
												Sub Total	**$ 45,97**

ItemOrder	Process	Use	UnitCost	Unit	Quantity	Multiplier	Mult. Val.	Sub Total
10	Machining Setup, Install and remove	Install and remove part from machine	$ 1,30	unit	1			1,3
20	Machining	Outer profil	$ 0,04	cm^3	383,53	Material - Aluminum	1	15,34112
30	Machining Setup, change	Pedal Mount Hole	$ 0,65	unit	1			0,65
40	Machining	Second profil and right side material removing	$ 0,04	cm^3	170	Material - Aluminum	1	$ 6,80
50	Machining Setup, change		$ 0,65		1			$ 0,65
60	Machining	left side material removing	$ 0,04	cm^3	98	Material - Aluminum	1	$ 3,92
70	Drilled holes < 25.4 mm dia.	Pedal Mount Hole and Holes for master-cylinders axle	$ 0,35	hole	4			$ 1,40
80	Reemed hole	Reamed pedal mount hole for bushing	$ 0,35	hole	2			$ 0,70
							Sub Total	**$ 30,76**

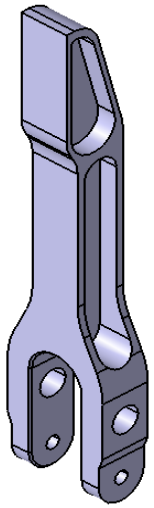

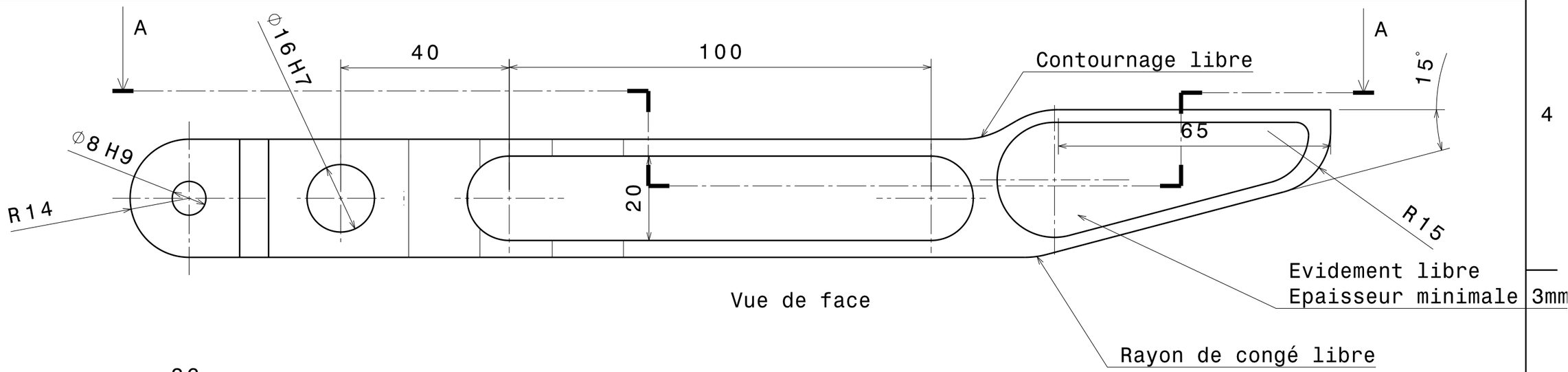

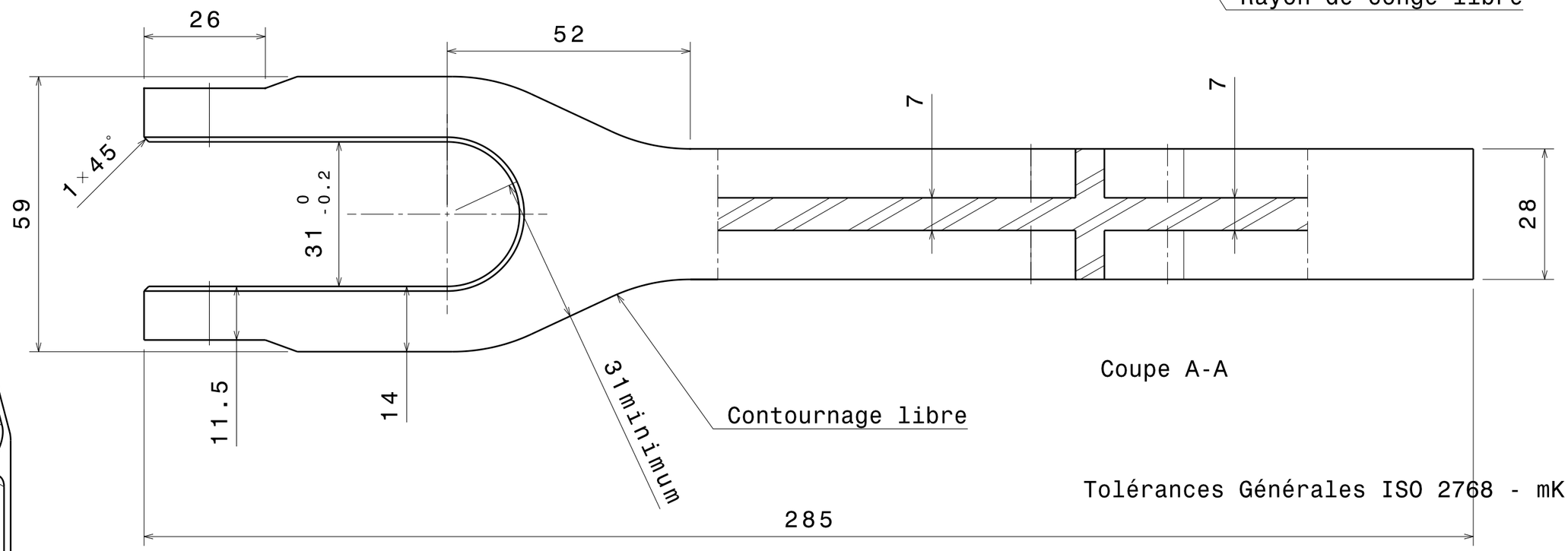

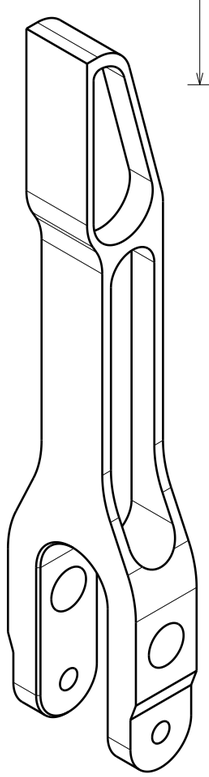

Vue isométrique
Echelle : 1:2

245

Taille A3		Ecurie Piston Sport Auto
Dessiné par Luc	Date 01/02/2015	Désignation Pédale de frein
Coordonnées lbrossar@ec-lyon.fr 06.59.15.53.71		
Plan vérifié par SCU		Quantité 1 / Matériau Aluminium 2017 / Version 0.9
		Echelle 1:1 / Numéro du plan 15-MU-005 / Feuille 1/1

University	Ecole Centrale de Lyon			**Car #**	81	**Part Cost**	$ 1,42
System	Frame and Body	**FileLink1**				**Qty**	2
Assembly	Pedal Assembly	**FileLink2**		**FileLink1**			
Part	Brake Pedal Bushing	**FileLink3**		**FileLink2**		**Extended Cost**	$ 2,83
P/N Base	FR 040016			**FileLink3**			
Suffix	AA						
Details	Bronze Bushing used for brake pedal pivots						

ItemOrder	Material	Use	UnitCost	Size1	Unit1	Size2	Unit2	Area Name	Area	Length	Density	Quantity	Sub Total
10	Bronze	Stock material for bushings	$ 2,20	12,5	mm		mm	Round area, 12.5 mm radius	1,23E-04	0,013	2 710,00	1	$ 0,01
												Sub Total	**$ 0,01**

ItemOrder	Process	Use	UnitCost	Unit	Quantity	Multiplier	Mult. Val.	Sub Total
10	Machining Setup, Install and remove	Install and remove part from machine	$ 1,30	unit	1			$ 1,30
20	Drilled holes < 25.4 mm dia.	Machining of the bushing (turning)	$ 0,04	cm^3	2	Material-Bronze	1,33	0,11
							Sub Total	**$ 1,41**

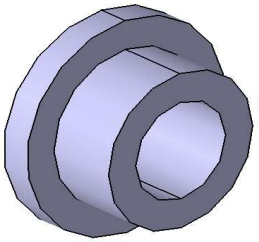

University	Ecole Centrale de Lyon			**Car #**	81	**Part Cost**	$ 2,92
System	Frame and Body	**FileLink1**				**Qty**	2
Assembly	Pedal Box	**FileLink2**		**FileLink1**			
Part	Ballance Bar Support	**FileLink3**		**FileLink2**		**Extended Cost**	$ 5,85
P/N Base	FR 04017			**FileLink3**			
Suffix	AA						
Details	Ballance Bar Support						

ItemOrder	Material	Use	UnitCost	Size1	Unit1	Size2	Unit2	Area Name	Area	Length	Density	Quantity	Sub Total
10	Steel	Stock material for part	$ 2,25	68	mm	70,5	mm	square	4,79E-03	0,003	8 010	1	$ 0,26
												Sub Total	**$ 0,26**

ItemOrder	Process	Use	UnitCost	Unit	Quantity	Multiplier	Mult. Val.	Sub Total
10	Machining Setup, Install and remove	Setup for laser cutting	$ 1,30	unit	1			$ 1,30
20	Laser Cut	Cutout shape	$ 0,01	cm	46	Material - Steel	3	$ 1,37
							Sub Total	**$ 2,67**

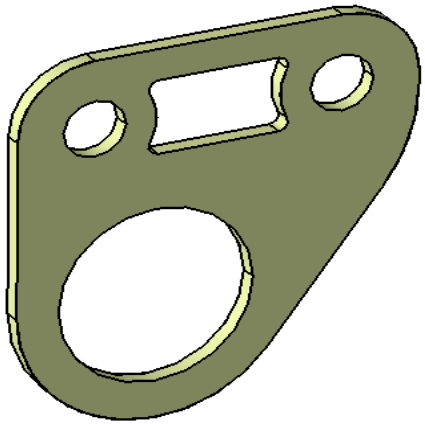

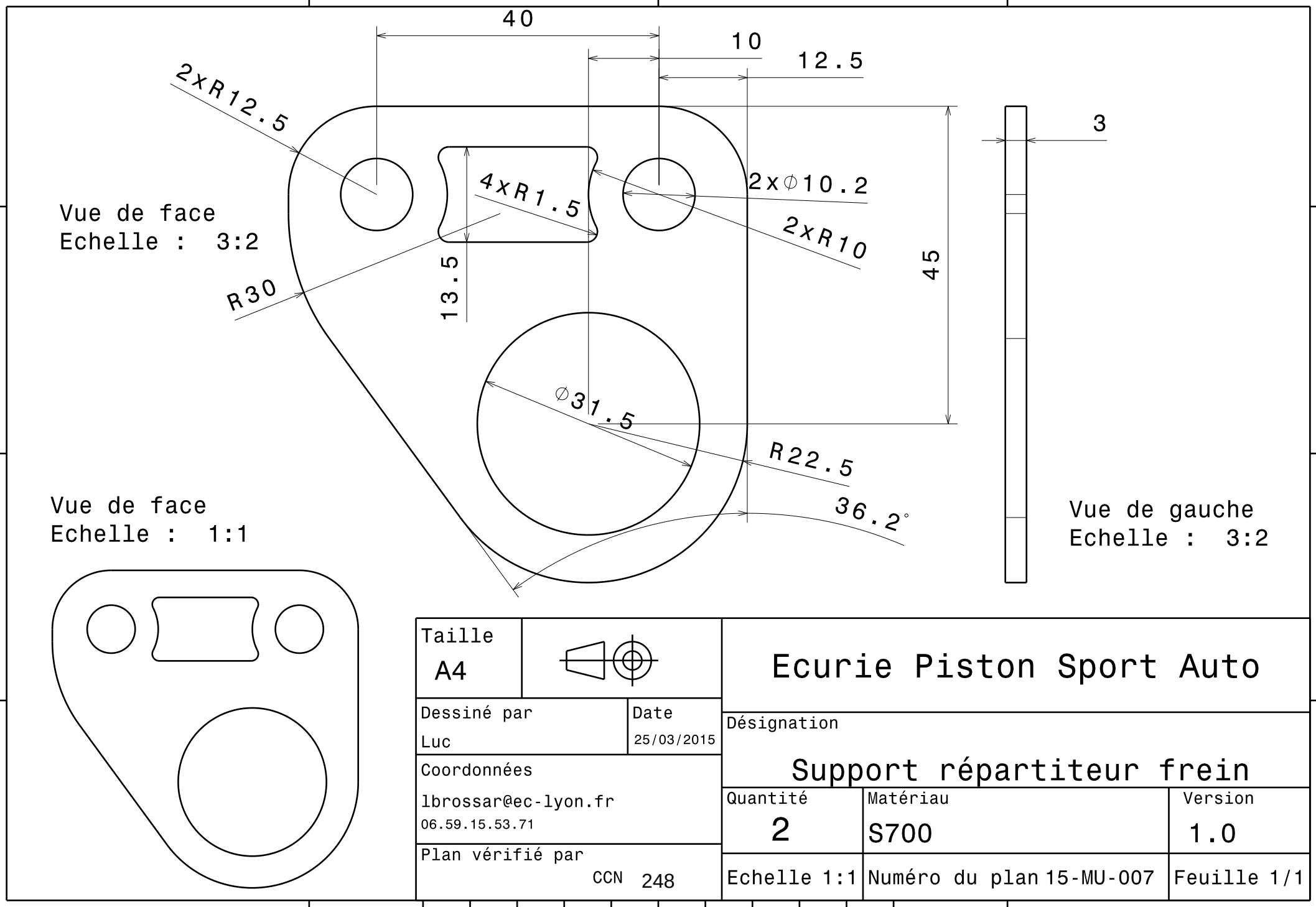

Taille A4		Ecurie Piston Sport Auto
Dessiné par Luc	Date 25/03/2015	Désignation Support répartiteur frein
Coordonnées lbrossar@ec-lyon.fr 06.59.15.53.71		Quantité 2 / Matériau S700 / Version 1.0
Plan vérifié par CCN 248		Echelle 1:1 / Numéro du plan 15-MU-007 / Feuille 1/1

University	Ecole Centrale de Lyon			**Car #**	81	**Part Cost**	$ 2,99
System	Frame and Body	**FileLink1**				**Qty**	1
Assembly	Nom de l'assemblage	**FileLink2**		**FileLink1**			
Part	Master Cylinder Bar	**FileLink3**		**FileLink2**		**Extended Cost**	$ 2,99
P/N Base	FR 04018			**FileLink3**			
Suffix	AA						
Details							

ItemOrder	Material	Use	UnitCost	Size1	Unit1	Size2	Unit2	Area Name	Area	Length	Density	Quantity	Sub Total
10	Steel, Normal	Material for part	$ 2,25	12	mm			Round 12mm diam.	1,13E-04	0,09	8 010,00	1	$ 0,19
												Sub Total	**$ 0,19**

ItemOrder	Process	Use	UnitCost	Unit	Quantity	Multiplier	Mult. Val.	Sub Total
10	Machining Setup, Install and remove	Install and remove part from machine	$ 1,30	unit	1			$ 1,30
20	Machining	Turning one end	$ 0,04	cm^3	2,7	Material - Steel	3	$ 0,32
30	Machning Setup, Change	Setup for machining the opposite side	$ 0,65	unit	1			$ 0,65
20	Machining	Turning the other end	$ 0,04	cm^3	2,7	Material - Steel	3	$ 0,32
50	Threading, External	Threading of both ends	$ 0,10	cm	2			$ 0,20
							Sub Total	**$ 2,80**

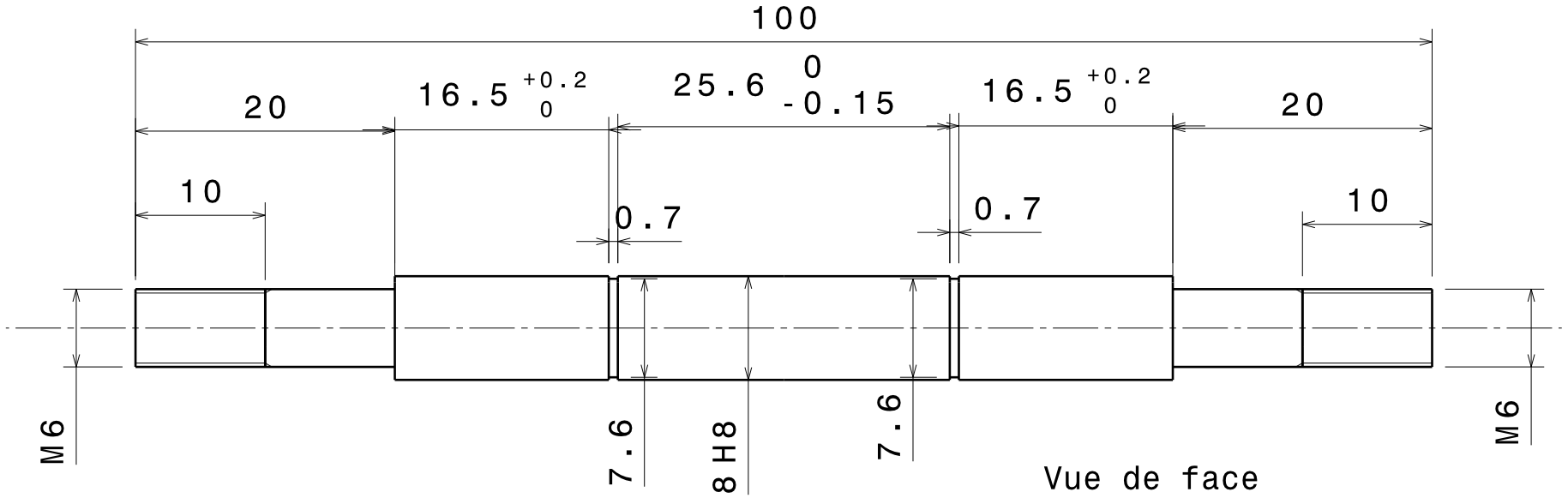

Tolérences Générale ISO 2768 - mK

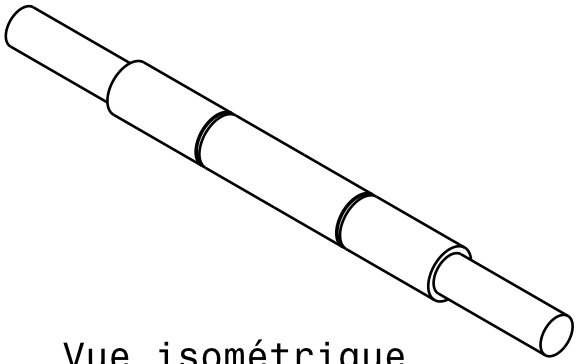

Vue isométrique
Echelle : 1:1

Taille A4		Ecurie Piston Sport Auto
Dessiné par Luc	Date 22/01/2015	Désignation Axe Maitre-Cylindres
Coordonnées lbrossar@ec-lyon.fr 06.59.15.53.71		Quantité 1 / Matériau Acier S235 / Version v1.0
Plan vérifié par LQO 250		Echelle 2:1 / Numéro du plan 15-B-065 / Feuille 1/1

University	Ecole Centrale de Lyon			**Car #**	81	**Part Cost**	$ 2,44
System	Frame and Body	**FileLink1**				**Qty**	1
Assembly	Pedal Assembly	**FileLink2**		**FileLink1**			
Part	Overtravel Swich Mount	**FileLink3**		**FileLink2**		**Extended Cost**	$ 2,44
P/N Base	FR 04019			**FileLink3**			
Suffix	AA						
Details							

ItemOrder	Material	Use	UnitCost	Size1	Unit1	Size2	Unit2	Area Name	Area	Length	Density	Quantity	Sub Total
10	Aluminium	Stock material for part	$ 4,20	80	mm	70	mm	square	5,60E-03	0,003	2 710	1	$ 0,16
												Sub Total	**$ 0,16**

ItemOrder	Process	Use	UnitCost	Unit	Quantity	Multiplier	Mult. Val.	Sub Total
10	Machining Setup, Install and remove	Setup for laser cutting	$ 1,30	unit	1			$ 1,30
20	Laser Cut	Cutout shape	$ 0,01	cm	48	Material - Aluminium	1	$ 0,48
30	Sheet metal bends	Bends	$ 0,25	unit	2			$ 0,50
							Sub Total	**$ 2,28**

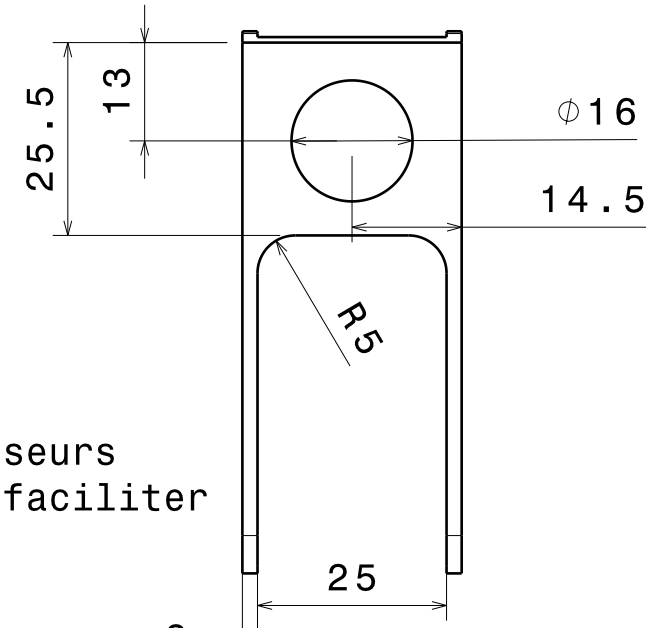

Vue de face
Echelle : 1:1

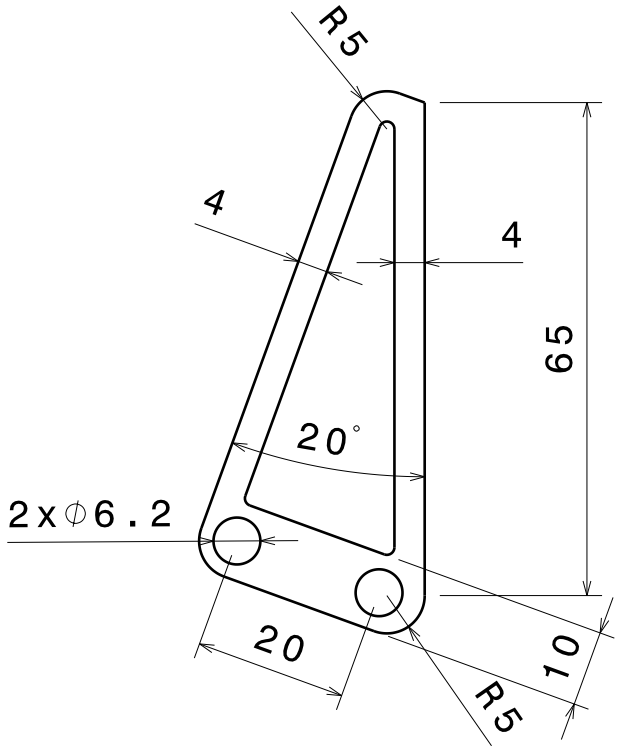

Vue de gauche
Echelle : 1:1

Les différentes epaisseurs peuvent évoluer pour faciliter la fabrication

Tolérences Générales
ISO 2768 - mK

Taille A4		Ecurie Piston Sport Auto
Dessiné par Luc	Date 22/01/2015	Désignation: Support coupe circuit Frein
Coordonnées lbrossar@ec-lyon.fr 06.59.15.53.71		Quantité 1 / Matériau Aluminium au choix / Version v1.0
Plan vérifié par CCN 252		Echelle 1:1 / Numéro du plan 15-M-065 / Feuille 1/1

University	Ecole Centrale de Lyon	**Car #**	81	**Asm Cost**	58,34
System	Frame and Body			**Qty**	1
Assembly	Clutch actuation system	**FileLink1**			
P/N Base	FR A0005	**FileLink2**		**Extended Cost**	$ 58,34
Suffix	AA	**FileLink3**			
Details	Operate the clutch cable mechanically from the clutch lever				

ItemOrder	Part	Part Cost	Quantity	Sub Total
10	Lever handle	$ 4,65	1	$ 4,65
20	Lever Joint	$ 9,53	1	$ 9,53
30	Lever Handle	$ 10,10	1	$ 10,10
40	Actuation Lever	$ 7,40	1	$ 7,40
50	Steel tube	$ 1,71	1	$ 1,71
			Sub Total	**$ 33,38**

ItemOrder	Material	Use	UnitCost	Size1	Unit1	Size2	Unit2	Area Name	Area	Length	Density	Quantity	Sub Total
10	Cable, Pull	Clutch actuation	$ 15,00							1,30		1,00	$ 19,50
20	Cable adjuster	Clutch cable	$ 1,00									2,00	$ 2,00
												Sub Total	**$ 21,50**

ItemOrder	Process	Use	UnitCost	Unit	Quantity	Multiplier	Mult. Val.	Sub Total
10	Weld	Steel tube welding on frame	$ 0,15	cm	3,8			$ 0,57
20	Assembly, 1kg, Loose	Lever Joint on Lever Handle	$ 0,06	unit	1			$ 0,06
30	Ratchet <= 6,35 mm	M6 Bolt installation	$ 0,50	unit	1			$ 0,50
40	Reaction Tool <= 6,35mm	M6 nut blocking	$ 0,25	unit	1			$ 0,25
50	Assembly, 1kg, Loose	Lever Handle on Frame	$ 0,06	unit	1			$ 0,06
60	Ratchet <= 6,35 mm	M6 Bolt installation	$ 0,50	unit	1			$ 0,50
70	Reaction Tool <= 6,35mm	M6 nut blocking	$ 0,25	unit	1			$ 0,25
80	Assembly, 1kg, Interference	Handle Padding on Lever Handle	$ 0,19	unit	1			$ 0,19
90	Assembly, 1kg, Line on line	Cable on cluch lever	$ 0,13	unit	1			$ 0,13
100	Assembly, 1kg, Interference	Cable on lever joint	$ 0,19	unit	1			$ 0,19
100	Assembly, 1kg, Interference	Cable on Engine	$ 0,19	unit	1			$ 0,19
							Sub Total	**$ 2,89**

ItemOrder	Fastener	Use	UnitCost	Size1	Unit1	Size2	Unit2	Quantity	Sub Total
10	Bolt,Grade 8.8 (SAE)		$ 0,08	6	mm	35	mm	2	$ 0,16
20	Washer, Grade 8.8 (SAE 5)		$ 0,01	6	mm			2	$ 0,02
30	Nut, Grade 8.8 (SAE 5)		$ 0,03	6	mm			2	$ 0,06
								Sub Total	**$ 0,24**

ItemOrder	Tooling	Use	UnitCost	Unit	Quantity	PVF	FractionIncluded	Sub Total
10	Welds - Welding Fixture	Steel tubewelding on frame	$ 500,00	point	2	3000	1	$ 0,33
							Sub Total	**$ 0,33**

University	Ecole Centrale de Lyon			**Car #**	81	**Part Cost**	$ 4,65
System	Frame and Body	**FileLink1**				**Qty**	1
Assembly	Clutch	**FileLink2**		**FileLink1**			
Part	Lever handle	**FileLink3**		**FileLink2**		**Extended Cost**	$ 4,65
P/N Base	FR 05001			**FileLink3**			
Suffix	AA						
Details							

ItemOrder	Material	Use	UnitCost	Size1	Unit1	Size2	Unit2	Area Name	Area	Length	Density	Quantity	Sub Total
10	Aluminium, Normal	Stock material for part	$ 4,20	0,025	m			Disc ø 25 mm	4,9E-04	0,217	2 710	1,00	$ 1,21
												Sub Total	**$ 1,21**

ItemOrder	Process	Use	UnitCost	Unit	Quantity	Multiplier	Mult. Val.	Sub Total
10	Machining Setup, Install and remove		$ 1,30	unit	1,0			$ 1,30
20	Machining	Main shape contouring	$ 0,04	cm^3	7,7	Material - Aluminium	1	$ 0,31
30	Machining Setup, Change		$ 0,65	unit	1,0			$ 0,65
40	Machining		$ 0,04	cm^3	1,2	Material - Aluminium	1	$ 0,05
50	Machining Setup, Change		$ 0,65	unit	1,0			$ 0,65
60	Machining		$ 0,04	cm^3	3,3	Material - Aluminium	1	$ 0,13
80	Drilled holes < 25.4 mm dia.	Weight Reduction	$ 0,35	hole	1,0	Material - Aluminium	1	$ 0,35
							Sub Total	**$ 3,44**

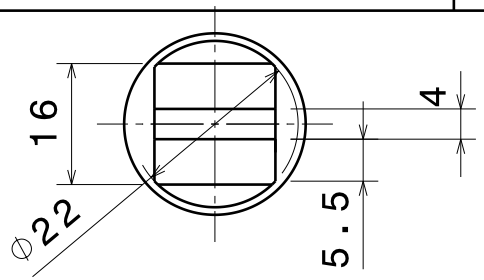

Vue de dessous
Echelle : 1:1

Tolérances générales
ISO 2768 mK

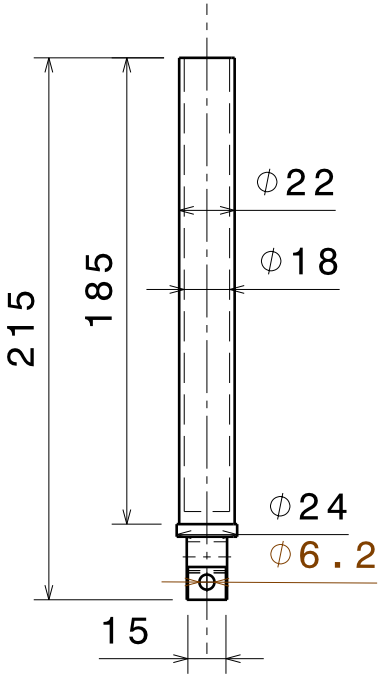

Vue de face
Echelle : 1:3

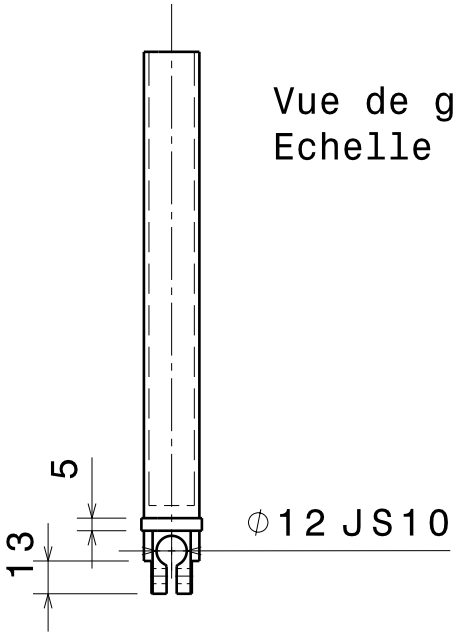

Vue de gauche
Echelle : 1:3

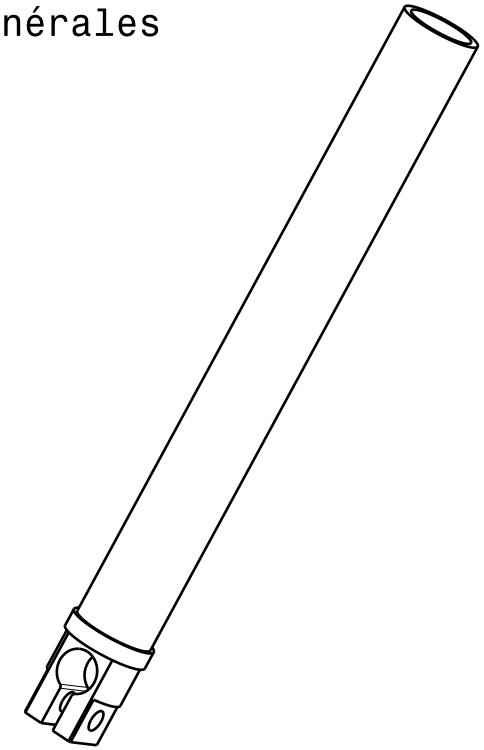

Vue isométrique
Echelle : 1:2

Taille A4		Ecurie Piston Sport Auto
Dessiné par Pierre Merlier	Date 06/11/2014	Désignation Support de poignée d'embrayage
Coordonnées 06 34 50 32 42 pierre.merlier@ecl13.ec-lyon.fr		Quantité 1 / Matériau Aluminium serie 2017 / Version 1.0
Plan vérifié par MZR 255		Echelle 1:2 / Numéro du plan 15-B-046 / Feuille 1/1

University	Ecole Centrale de Lyon			**Car #**	81	**Part Cost**	$ 9,53
System	Frame and Body	**FileLink1**				**Qty**	1
Assembly	Clutch	**FileLink2**		**FileLink1**			
Part	Lever Joint	**FileLink3**		**FileLink2**		**Extended Cost**	$ 9,53
P/N Base	FR 05002			**FileLink3**			
Suffix	AA						
Details	Taken from a motorcycle, cost as made						

ItemOrder	Material	Use	UnitCost	Size1	Unit1	Size2	Unit2	Area Name	Area	Length	Density	Quantity	Sub Total
10	Steel, Mild	Material for Part	$ 2,25	0,25	kg						7 860	1,00	$ 0,56
												Sub Total	**$ 0,56**

ItemOrder	Process	Use	UnitCost	Unit	Quantity	Multiplier	Mult. Val.	Sub Total
10	Die casting	Body Shape	$ 4,00	kg	0,25			$ 1,00
20	Machining Setup, Install and Remove		$ 1,30	unit	1			$ 1,30
30	Machining	Main shape finish	$ 0,04	cm^3	6,00	Material - Steel	3	$ 0,72
40	Machining Setup, Change		$ 0,65	unit	1			$ 0,65
50	Machining	Collar Finish	$ 0,04	cm^3	0,60	Material - Steel	3	$ 0,07
60	Drilled holes <25,4 mm dia.	Axle Holes	$ 0,35	unit	2			$ 0,70
70	Threading, Internal		$ 0,10	cm^3	1,00			$ 0,10
							Sub Total	**$ 2,30**

ItemOrder	Tooling	Use	UnitCost	Unit	Quantity	PVF	FractionInclu	Sub Total
10	Die casting - Die	Body Shape	$ 10 000,00	die	2,00	3000	1	$ 6,67
							Sub Total	**$ 6,67**

University	Ecole Centrale de Lyon			**Car #**	81	**Part Cost**	$ 10,10
System	Frame and Body	**FileLink1**				**Qty**	1
Assembly	Clutch	**FileLink2**		**FileLink1**			
Part	Actuation Lever	**FileLink3**		**FileLink2**		**Extended Cost**	$ 10,10
P/N Base	FR 05003			**FileLink3**			
Suffix	AA						
Details	Taken from a motorcycle, cost as made						

ItemOrder	Material	Use	UnitCost	Size1	Unit1	Size2	Unit2	Area Name	Area	Length	Density	Quantity	Sub Total
10	Aluminium, Normal	Material for Part	$ 4,20	0,15	kg						2710	1	$ 0,63
												Sub Total	**$ 0,63**

ItemOrder	Process	Use	UnitCost	Unit	Quantity	Multiplier	Mult. Val.	Sub Total
10	Die casting	Lever casting	$ 4,00	kg	0,15			$ 0,60
20	Machining Setup, Install and Remove		$ 1,60	unit	1			$ 1,60
30	Machining Setup, Install and Remove		$ 0,04	cm^3	6,3	Material - Aluminium	1	$ 0,25
40	Drilled holes < 25,4mm dia.	Axle hole	$ 0,35	unit	1			$ 0,35
							Sub Total	**$ 2,80**

ItemOrder	Process	Use	UnitCost	Unit	Quantity	PVF	FractionInclu	Sub Total
10	Die casting - Die	Lever casting	$ 10 000,00	die	2	3000	1	$ 6,67
							Sub Total	**$ 6,67**

University	Ecole Centrale de Lyon			**Car #**	81	**Part Cost**	$ 7,40
System	Frame and Body	**FileLink1**				**Qty**	1
Assembly	Clutch	**FileLink2**		**FileLink1**			
Part	Handle padding	**FileLink3**		**FileLink2**		**Extended Cost**	$ 7,40
P/N Base	FR 05004			**FileLink3**			
Suffix	AA						
Details							

ItemOrder	Material	Use	UnitCost	Size1	Unit1	Size2	Unit2	Area Name	Area	Length	Density	Quantity	Sub Total
10	Rubber		$ 3,30	0,1	kg						900,00	1	$ 0,33
												Sub Total	**$ 0,33**

ItemOrder	Process	Use	UnitCost	Unit	Quantity	Multiplier	Mult. Val.	Sub Total
10	Die Casting	Padding casting	$ 4,00	kg	0,1			$ 0,40
							Sub Total	**$ 0,40**

ItemOrder	Tooling	Use	UnitCost	Unit	Quantity	PVF	FracIncld	Sub Total
10	Die Casting - Die	Padding Casting	$ 10 000,00	die	2	3000	1	$ 6,67
							Sub Total	**$ 6,67**

University	Ecole Centrale de Lyon			**Car #**	81	**Part Cost**	$ 1,71
System	Frame and Body	**FileLink1**				**Qty**	1
Assembly	Clutch	**FileLink2**		**FileLink1**			
Part	Steel tube	**FileLink3**		**FileLink2**		**Extended Cost**	$ 1,71
P/N Base	FR 05005			**FileLink3**			
Suffix	AA						
Details							

ItemOrder	Material	Use	UnitCost	Size1	Unit1	Size2	Unit2	Area Name	Area	Length	Density	Quantity	Sub Total
10	Steel Alloy	Material for part	$ 2,25	0,02	kg			Round 12mm x 1mm		0,050	7 810	1,00	$ 0,05
												Sub Total	**$ 0,05**

ItemOrder	Process	Use	UnitCost	Unit	Quantity	Multiplier	Mult. Val.	Sub Total
10	Machining Setup, Install and Remove		$ 1,30	unit	1			$ 1,30
20	Machining		$ 0,04	cm^3	3	Machining - Steel	3	$ 0,36
							Sub Total	**$ 1,66**

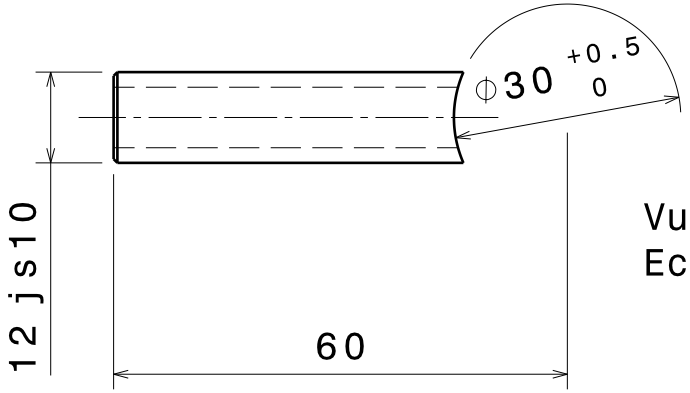

Vue de dessous
Echelle : 1:1

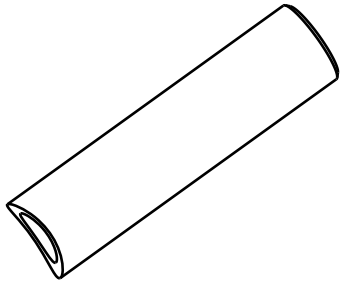

Vue isométrique
Echelle : 1:1

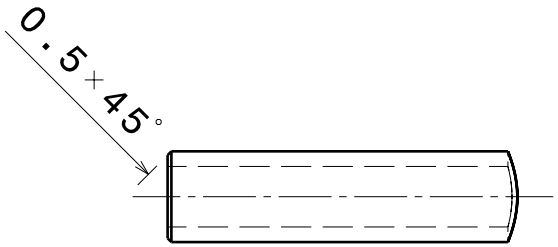

Vue de face
Echelle : 1:1

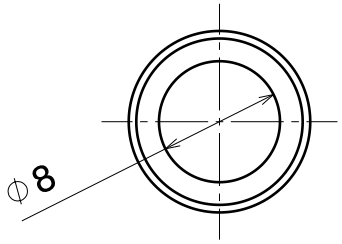

Vue de gauche
Echelle : 2:1

Tolérances générales
ISO 2768 mK

Taille A4		Ecurie Piston Sport Auto
Dessiné par Pierre Merlier	Date 06/11/2014	Désignation Chape fixation support poignée d'embrayage
Coordonnées 06 34 50 32 42 pierre.merlier@ecl13.ec-lyon.fr		Quantité 2 / Matériau Acier S235 / Version 1.0
Plan vérifié par MZR 260		Echelle 1:1 / Numéro du plan 15-B-047 / Feuille 1/1

University	Ecole Centrale de Lyon	**Car #**	81	**Asm Cost**	1 789,02
System	Frame and Body			**Qty**	1
Assembly	Body	**FileLink1**			
P/N Base	FR A0006	**FileLink2**		**Extended Cost**	$ 1 789,02
Suffix	AA	**FileLink3**			
Details	Complete Body Assembly				

ItemOrder	Part	Part Cost	Quantity	Sub Total
10	Front body	$ 1 118,41	1	$ 1 118,41
20	Body Right Inlet	$ 227,05	1	$ 227,05
30	Body Left Inlet	$ 227,22	1	$ 227,22
40	Body Plates	$ 158,62	1	$ 158,62
50	Body Mounts	$ 0,50	10	$ 5,00
60	Body Plates Moutns	$ 0,15	42	$ 6,30
			Sub Total	**$ 1 742,60**

ItemOrder	Material	Use	UnitCost	Size1	Unit1	Size2	Unit2	Area Name	Area	Length	Density	Quantity	Sub Total
10	Adhesive	Glue for Body Plates Mounts fixing										-	$ -
20	Paint	Protect Body Mounts from Rust	$ 10,00	0,0108	m²							1,00	$ 0,11
												Sub Total	**$ 0,11**

ItemOrder	Process	Use	UnitCost	Unit	Quantity	Multiplier	Mult. Val.	Sub Total
10	Weld	Weld body mounts to frame	$ 0,15	cm	20			$ 3,00
20	Aerosol Apply	Protect Body Mounts from Rust	$ 5,25	m²	0,0108			$ 0,06
30	Liquid Applicator Gun	Glue application for Body plates mounts	$ 0,15	cm	1,5	Repeat 42	42	$ 9,45
40	Assemble, 1kg, Line to Line	Body plates mount	$ 0,13	unit	42			$ 5,46
50	Riveting	For nutsert on Body and Body Plates Mounts (similar process)	$ 0,25	unit	52			$ 13,00
50	Assemble, 3kg, Loose	Body Front	$ 0,50	unit	2			$ 1,00
60	Ratchet <=6,35mm	M6 bolts for Front body fixing	$ 0,50	unit	4			$ 2,00
70	Reaction Tool <=6,35mm	M6 bolts for Front body fixing	$ 0,25	unit	4			$ 1,00
80	Assemble, 1kg, Line to Line	Body Plates	$ 0,13	unit	1	Repeat 14	14	$ 1,82
90	Ratchet <=6,35mm	M5 bolts for Body Plates fixing	$ 0,25	unit	3	repeat 14	14	$ 10,50
100	Reaction Tool <=6,35mm	M5 bolts for Body Plates fixing	$ 0,50	unit	3	Repeat 14	14	$ 21,00
110	Assemble, 3kg, Loose	Air Inlet	$ 0,50	unit	2			$ 1,00
120	Ratchet <=6,35mm	M6 bolts for Air Inlet fixing	$ 0,50	unit	4	Repeat 2	2	$ 4,00
130	Reaction Tool <=6,35mm	M6 bolts for Air Inlet fixing	$ 0,25	unit	4	Repeat 2	2	$ 2,00
							Sub Total	**$ 31,97**

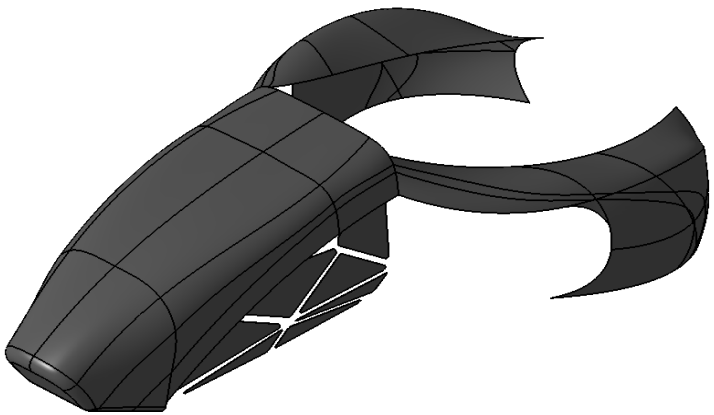

ItemOrder	Fastener	Use	UnitCost	Size1	Unit1	Size2	Unit2	Quantity	Sub Total
10	Bolt,Grade 8.8 (SAE)	Bolt Front Body on Mounts	$ 0,03	6	mm	50	mm	4	$ 0,12
20	Bolt,Grade 8.8 (SAE)	Bolt Air Inlets on Mounts	$ 0,03	6	mm	15	mm	8	$ 0,24
30	Bolt,Grade 8.8 (SAE)	Bolt Front Body Plates on Mounts	$ 0,02	5	mm	15	mm	4	$ 0,08
40	Washer, Grade 8,8 (SAE 5)	M6 bolts	$ 0,01	6	mm			12	$ 0,12
41	Washer, Grade 8,8 (SAE 5)	M5 bolts	$ 0,01	5	mm			42	$ 0,42
	Nutsert	For Body plates fixing	$ 0,22	6	mm			12	$ 2,69
	Nutsert	For Body and Air Inlets fixing	$ 0,18	5	mm			42	$ 7,35
								Sub Total	**$ 11,02**

ItemOrder	Tooling	Use	UnitCost	Unit	Quantity	PVF	FractionIncluded	Sub Total
10	Welds - Welding Fixture	Body Mounts	$ 500,00	point	20	3000	1	$ 3,33
							Sub Total	**$ 3,33**

University	Ecole Centrale de Lyon			**Car #**	81	**Part Cost**	$ 559,20
System	Frame and Body	**FileLink1**				**Qty**	2
Assembly	Body	**FileLink2**		**FileLink1**			
Part	Front body	**FileLink3**		**FileLink2**		**Extended Cost**	$ 1 118,41
P/N Base	FR 06001			**FileLink3**			
Suffix	AA						
Details							

ItemOrder	Material	Use	UnitCost	Size1	Unit1	Size2	Unit2	Area Name	Area	Length	Density	Quantity	Sub Total
10	Carbon Fiber, 1 Ply	Composite	$ 200,00	0,59150	kg				1,18300			2	$ 236,60
10	Glass Fiber, 1 Plys	Composite	$ 100,00	0,59150	kg				1,18300			2	$ 118,30
												Sub Total	**$ 354,90**

ItemOrder	Process	Use	UnitCost	Unit	Quantity	Multiplier	Mult. Val.	Sub Total
10	Lamination, Manual	Lamination of the 4 plys	$ 35,00	m²	1,183	Repeat 4	4	$ 165,62
20	Resin application, Manual	Resin application on the 4 plys	$ 5,00	m²	1,18300	Repeat 4	4	$ 23,66
30	Cure, Room Temperature	Curing	$ 10,00	m²	1,18300			$ 11,83
40	Drilled holes < 25.4 mm dia.	Holes for fiwing	$ 0,35	unit	4	Material - Composite	2	$ 2,80
							Sub Total	**$ 203,91**

ItemOrder	Tooling	Use	UnitCost	Unit	Quantity	PVF	FracIncld	Sub Total
Lamination	Lamination - Composite Tool	Right half mold	$ 1 000,00	m²	0,59150	3000	1	$ 0,20
Lamination	Lamination - Composite Tool	Right half mold	$ 1 000,00	m²	0,59150	3000	1	$ 0,20
							Sub Total	**$ 0,39**

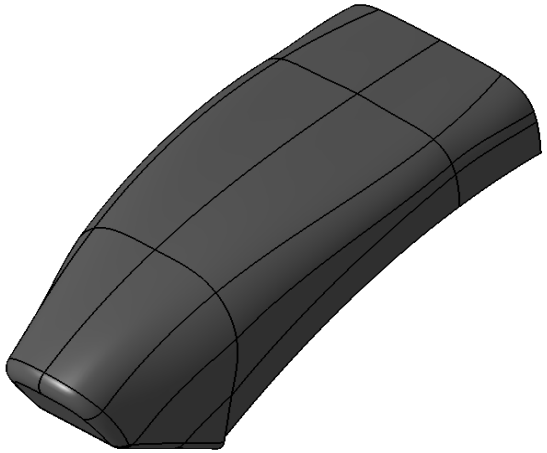

University	Ecole Centrale de Lyon			**Car #**	81	**Part Cost**	$ 227,05
System	Frame and Body	**FileLink1**				**Qty**	1
Assembly	Body	**FileLink2**		**FileLink1**			
Part	Body Right Inlet	**FileLink3**		**FileLink2**		**Extended Cost**	$ 227,05
P/N Base	FR 06002			**FileLink3**			
Suffix	AA						
Details							

ItemOrder	Material	Use	UnitCost	Size1	Unit1	Size2	Unit2	Area Name	Area	Length	Density	Quantity	Sub Total
10	Carbon Fiber, 1 Ply	Composite	$ 200,00	0,25	kg				0,50900			2	$ 101,80
10	Glass Fiber, 1 Plys	Composite	$ 100,00	0,25	kg				0,50900			2	$ 50,90
												Sub Total	**$ 152,70**

ItemOrder	Process	Use	UnitCost	Unit	Quantity	Multiplier	Mult. Val.	Sub Total
10	Lamination, Manual	Lamination of the 4 plys	$ 35,00	m²	0,402	Repeat 4	4	$ 56,28
20	Resin application, Manual	Resin application on the 4 pl	$ 5,00	m²	0,50900	Repeat 4	4	$ 10,18
30	Cure, Room Temperature	Curing	$ 10,00	m²	0,50900			$ 5,09
40	Drilled holes < 25.4 mm dia.	Holes for fiwing	$ 0,35	unit	4	Material - Composite	2	$ 2,80
							Sub Total	**$ 74,35**

ItemOrder	Tooling	Use	UnitCost	Unit	Quantity	PVF	FracIncld	Sub Total
Lamination	Lamination - Composite Tool	Right half mold	$ 1 000,00	m²	0,50900	3000	1	$ 0,17
							Sub Total	**$ 0,17**

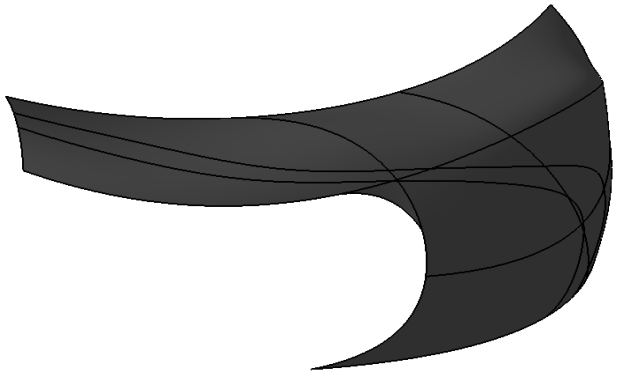

University	Ecole Centrale de Lyon			**Car #**	81	**Part Cost**	$ 227,22
System	Frame and Body	**FileLink1**				**Qty**	1
Assembly	Body	**FileLink2**		**FileLink1**			
Part	Body Left Inlet	**FileLink3**		**FileLink2**		**Extended Cost**	$ 227,22
P/N Base	FR 06003			**FileLink3**			
Suffix	AA						
Details							

ItemOrder	Material	Use	UnitCost	Size1	Unit1	Size2	Unit2	Area Name	Area	Length	Density	Quantity	Sub Total
10	Carbon Fiber, 1 Ply	Composite	$ 200,00	0,25	kg				0,50900			2	$ 101,80
10	Glass Fiber, 1 Plys	Composite	$ 100,00	0,25	kg				0,50900			2	$ 50,90
												Sub Total	**$ 152,70**

ItemOrder	Process	Use	UnitCost	Unit	Quantity	Multiplier	Mult. Val.	Sub Total
10	Lamination, Manual	Lamination of the 4 plys	$ 35,00	m²	0,402	Repeat 4	4	$ 56,28
20	Resin application, Manual	Resin application on the 4 ply	$ 5,00	m²	0,50900	Repeat 4	4	$ 10,18
30	Cure, Room Temperature	Curing	$ 10,00	m²	0,50900			$ 5,09
40	Drilled holes < 25.4 mm dia.	Holes for fiwing	$ 0,35	unit	4	Material - Composite	2	$ 2,80
							Sub Total	**$ 74,35**

ItemOrder	Tooling	Use	UnitCost	Unit	Quantity	PVF	FracIncld	Sub Total
Lamination	Lamination - Composite Tool	Right half mold	$ 1 000,00	m²	0,50900	3000	1	$ 0,17
							Sub Total	**$ 0,17**

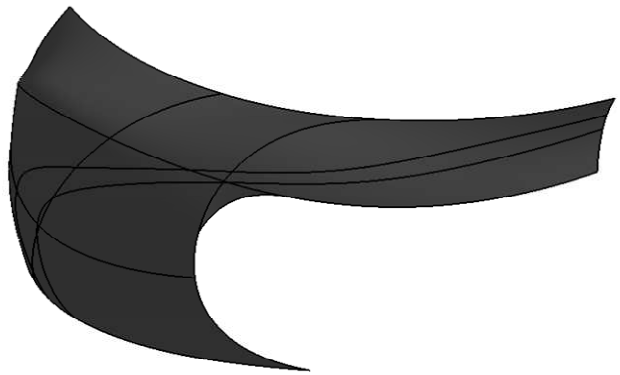

University	Ecole Centrale de Lyon			**Car #**	81	**Part Cost**	$ 158,62
System	Frame and Body	**FileLink1**				**Qty**	2
Assembly	Body	**FileLink2**		**FileLink1**			
Part	Body Plates	**FileLink3**		**FileLink2**		**Extended Cost**	$ 317,24
P/N Base	FR 06004			**FileLink3**			
Suffix	AA						
Details	All 7 Plates for closing a side of the car						

ItemOrder	Material	Use	UnitCost	Size1	Unit1	Size2	Unit2	Area Name	Area	Length	Density	Quantity	Sub Total
10	Carbon Fiber, 1 Ply	Composite	$ 200,00	0,161	kg				0,40200			2	$ 64,40
10	Aramid (Kevlar) Fiber, 1 Ply	Composite	$ 150,00	0,161	mm				0,40200			1	$ 24,15
												Sub Total	**$ 88,55**

ItemOrder	Process	Use	UnitCost	Unit	Quantity	Multiplier	Mult. Val.	Sub Total
10	Lamination, Manual	Lamination of the 3 plys	$ 35,00	m²	0,402	Repeat 3	3	$ 42,21
20	Resin application, Manual	Resin application on the 3 ply	$ 5,00	m²	0,402	Repeat 3	3	$ 6,03
30	Cure, Room Temperature	Curing	$ 10,00	m²	0,402			$ 4,02
40	Machining Setup, Install and remove	Setup for machining	$ 1,30	unit	1			$ 1,30
50	Waterjet Cut	Cutting all the 7 plates	$ 0,01	cm^3	579	Material - Composite	2	$ 11,58
60	Drilled holes < 25.4 mm dia.	Holes on the 7 plates	$ 0,35	unit	7	Material - Composite	2	$ 4,90
							Sub Total	**$ 70,04**

ItemOrder	Tooling	Use	UnitCost	Unit	Quantity	PVF	FracIncld	Sub Total
Lamination	Lamination - Flat Panel Tool	Mold for all plates	$ 1 500,00	m²	0,402	3000	7	$ 0,03
							Sub Total	**$ 0,03**

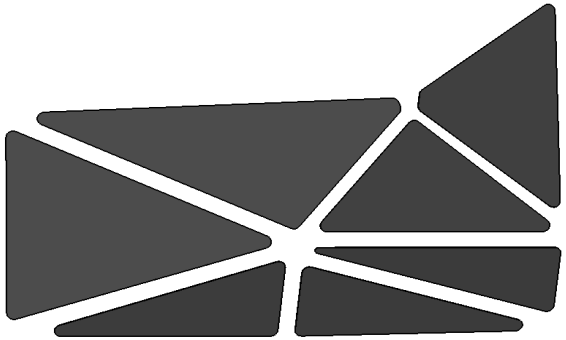

University	Ecole Centrale de Lyon			**Car #**	81	**Part Cost**	$ 0,50
System	Frame and Body	**FileLink1**				**Qty**	12
Assembly	Body	**FileLink2**		**FileLink1**			
Part	Body Mount	**FileLink3**		**FileLink2**		**Extended Cost**	$ 6,00
P/N Base	FR 06005			**FileLink3**			
Suffix	AA						
Details	Steel Mounts welded on the frame						

ItemOrder	Material	Use	UnitCost	Size1	Unit1	Size2	Unit2	Area Name	Area	Length	Density	Quantity	Sub Total
10	Steel, Mild	Material for part	$ 2,25	0,0305	m	0,023	m	Rectangular 30,5x23mm	0,00070	0,003	7 860,00	1	$ 0,03
												Sub Total	**$ 0,03**

ItemOrder	Process	Use	UnitCost	Unit	Quantity	Multiplier	Mult. Val.	Sub Total
10	Machining Setup, Install and remove	Setup for machining	$ 1,30	unit	1	10 parts cut from a single machine setup	0,1	$ 0,13
20	Laser Cut	Mount Countourning	$ 0,01	cm	11,3	Material - Steel	3	$ 0,34
							Sub Total	**$ 0,47**

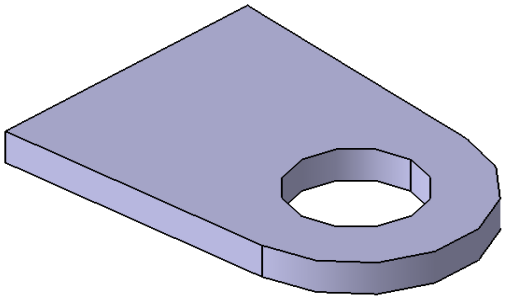

University	Ecole Centrale de Lyon			**Car #**	81	**Part Cost**	$ 0,15
System	Frame and Body	**FileLink1**				**Qty**	42
Assembly	Body	**FileLink2**		**FileLink1**			
Part	Body Plates Mount	**FileLink3**		**FileLink2**		**Extended Cost**	$ 6,32
P/N Base	FR 06006			**FileLink3**			
Suffix	AA						
Details	Aluminium Mounts glued on frame						

ItemOrder	Material	Use	UnitCost	Size1	Unit1	Size2	Unit2	Area Name	Area	Length	Density	Quantity	Sub Total
10	Aluminium, Normal	Material for part	$ 4,20	0,0235	m	0,018	m	Rectangular 30,5x23mm	0,00042	0,002	2 710,00	1	$ 0,01
												Sub Total	**$ 0,01**

ItemOrder	Process	Use	UnitCost	Unit	Quantity	Multiplier	Mult. Val.	Sub Total
10	Machining Setup, Install and remove	Setup for machining	$ 1,30	unit	1	42 parts cut from a single machine setup	0,02	$ 0,03
20	Laser Cut	Mount Countourning	$ 0,01	cm	11	Material - Aluminium	1	$ 0,11
							Sub Total	**$ 0,14**

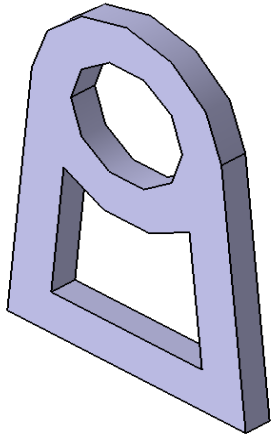

ÉCOLE CENTRALE LYON

INSTRUMENTS & WIRING

EPSA TEAM

CAR # 81

Ecurie Piston Sport Auto

University	Ecole Centrale de Lyon	**Car #**	81	**Asm Cost**	104,87
System	Electrical			**Qty**	1
Assembly	Battery assembly				
P/N Base	EL A0001			**Extended Cost**	$ 104,87
Suffix	AA				
Details					

ItemOrder	Part	Part Cost	Quantity	Sub Total
10	Side battery mount	$ 3,13	2	$ 6,26
20	Main battery mount	$ 3,78	1	$ 3,78
30	Front tab	$ 1,56	1	$ 1,56
40	Rear tab	$ 1,56	1	$ 1,56
50	Master Switch mount	$ 2,81	1	$ 2,81
			Sub Total	**$ 15,96**

ItemOrder	Material	Use	UnitCost	Size1	Unit1	Size2	Unit2	Area Name	Area	Length	Density	Quantity	Sub Total
10	Battery, Advanced Chemistry (NiMH, Li-Ion, etc.)	Starter battery LiFePo4	$ 65,00	0,85	kg							0,85	$ 55,25
20	Adhesive	Glue to assemble side and main battery mounts	$ -									1	$ -
30	Switch, Kill	Master switch	$ 3,00									1	$ 3,00
40	Fuse, Power	Main 250A Fuse (anti Short cut)	$ 1,00									1	$ 1,00
50	Fuse Box	Main fuse box	$ 0,25	2	pin							2	$ 0,50
60	Wire, power	Battery cables	$ 3,00	0,6	m							0,6	$ 1,80
70	Connector, High Power, > 2 Amps	Battery terminals	$ 2,00	1	pin							2	$ 4,00
80	Connector, High Power, > 2 Amps	Master switch	$ 2,00	1	pin							2	$ 4,00
90	Connector, High Power, > 2 Amps	Ground cable	$ 2,00	1	pin							2	$ 4,00
												Sub Total	**$ 73,55**

ItemOrder	Process	Use	UnitCost	Unit	Quantity	Multiplier	Mult. Val.	Sub Total
10	Weld	Tabs on frame	0,15	cm	9			$ 1,35
20	Assemble, 1kg, Loose	Side to main battery mount	$ 0,06	unit	2			$ 0,12
30	Brush Apply	Side to main battery mount	$ 0,02	cm^2	8			$ 0,16
40	Assemble, 1kg, Line-on-Line	Insert Battery in Braket	$ 0,13	unit	1			$ 0,13
50	Assemble, 1kg, Loose	Battery mount on tab	$ 0,06	unit	1			$ 0,06
60	Ratchet <= 6.35 mm	Tighten M6 bolt between Battery mount and tape	$ 0,50	unit	2			$ 1,00
70	Reaction Tool <= 6.35 mm	Reaction tool for M6 nut from battery	$ 0,25	unit	2			$ 0,50
80	Assemble, 1kg, Loose	Master switch on mount	$ 0,06	unit	1			$ 0,06
90	Assemble, 1kg, Loose	Master switch mount on frame	$ 0,06	unit	1			$ 0,06
100	Ratchet <= 6.35 mm	Tighten M6 bolt for Master switch and mount	$ 0,50	unit	5			$ 2,50
110	Reaction Tool <= 6.35 mm	Reaction tool for M6 nut from master switch	$ 0,25	unit	6			$ 1,50
120	Cut wire	Cut wires to length	$ 0,08	unit	3			$ 0,24
130	Strip wire	Strip wire ends	$ 0,08	unit	6			$ 0,48
140	Crimp wire	All single-wire connectors	$ 0,17	unit	6			$ 1,02
150	Wire Dressing (Install and route)	Battery and groung wire	$ 1,00	m	0,6			$ 0,60

160	Attach Wire, Ring	Battery terminals	$ 0,48	unit	2			$ 0,96
170	Attach Wire, Ring	Ground wire	$ 0,48	unit	2			$ 0,96
180	Attach Wire, Ring	Master switch terminals	$ 0,48	unit	2			$ 0,96
							Sub Total	**$ 12,66**

ItemOrder	Fastener	Use	UnitCost	Size1	Unit1	Size2	Unit2	Quantity	Sub Total
10	Bolt, Grade 8.8 (SAE 5)	M6 bolt for Battery mount on tab	$ 0,04	6	mm	20	mm	2	$ 0,08
20	Nut, Grade 8.8 (SAE 5)	M6 nut for Battery mount on tab	$ 0,03	6	mm			2	$ 0,06
30	Washer, Grade 8.8 (SAE 5)	M6 washer for Battery mount on tab	$ 0,01	6	mm			4	$ 0,04
40	Bolt, Grade 8.8 (SAE 5)	M6 bolt for Master switch mount on tab	$ 0,04	6	mm	20	mm	3	$ 0,12
50	Nut, Grade 8.8 (SAE 5)	M6 nut for Master switch mount on tab	$ 0,03	6	mm			3	$ 0,09
60	Washer, Grade 8.8 (SAE 5)	M6 washer for Master switch mount on tab	$ 0,01	6	mm			4	$ 0,04
70	Bolt, Grade 8.8 (SAE 5)	M6 bolt for Master switch mount on tab	$ 0,07	6	mm	30	mm	2	$ 0,14
80	Nut, Grade 8.8 (SAE 5)	M6 nut for Master switch mount on tab	$ 0,03	6	mm			2	$ 0,06
90	Bolt, Grade 8.8 (SAE 5)	M6 bolt for Master switch mount on tab	$ 0,04	6	mm	15	mm	1	$ 0,04
100	Nut, Grade 8.8 (SAE 5)	M6 nut for Master switch mount on tab	$ 0,03	6	mm			1	$ 0,03
								Sub Total	**$ 0,70**

ItemOrder	Tooling	Use	UnitCost	Unit	Quantity	PVF	FractionInc	Sub Total
10	Welds - Welding Fixture		$ 500,00	point	12	3000	1	$ 2,00
							Sub Total	**$ 2,00**

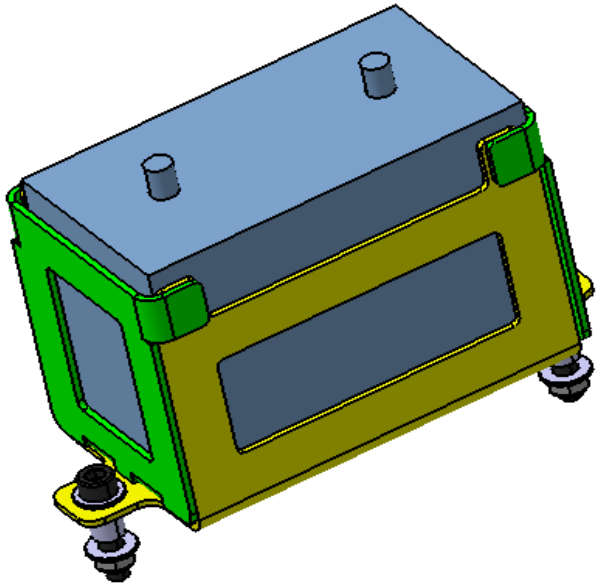

University	Ecole Centrale de Lyon	**Car #**	81	**Part Cost**	$ 3,13
System	Electrical			**Qty**	2
Assembly	Battery assembly				
Part	Side battery mount			**Extended Cost**	$ 6,26
P/N Base	EL 01001				
Suffix	AA				
Details					

ItemOrder	Material	Use	UnitCost	Size1	Unit1	Size2	Unit2	Area Name	Area	Length	Density	Quantity	Sub Total
10	Aluminium - Normal (per kg)	Stock material for part	$ 4,20	100	mm	2	mm	Rectangular area 100mm x 2mm	2,00E-04	0,100	2 710	1	$ 0,23
												Sub Total	**$ 0,23**

ItemOrder	Process	Use	UnitCost	Unit	Quantity	Multiplier	Mult. Val.	Sub Total
10	Machining Setup, Install and remove	Setup for laser cutting	$ 1,30	unit	1			$ 1,30
20	Laser Cut	Cutout shape	$ 0,01	cm	60	Material - Aluminum	1	$ 0,60
30	Sheet metal bends		$ 0,25	bend	4			$ 1,00
							Sub Total	**$ 2,90**

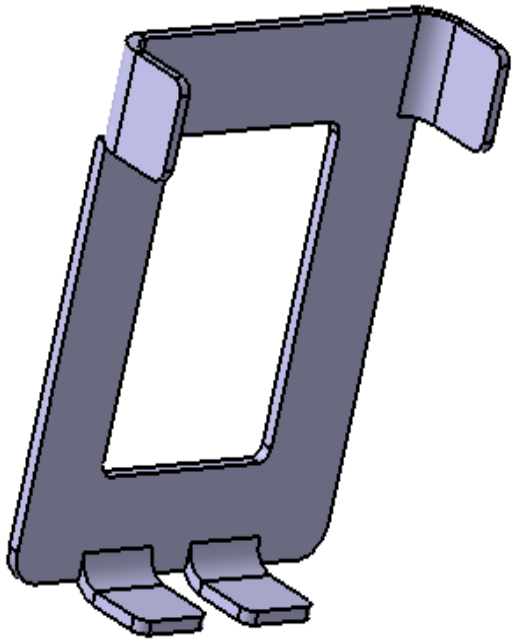

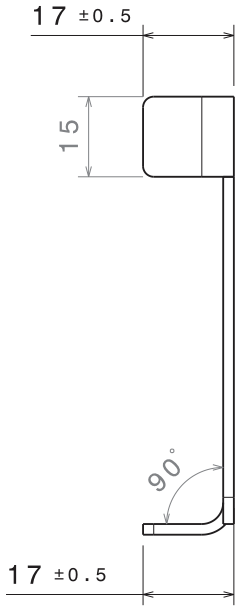

Vue de droite
Echelle : 1:1

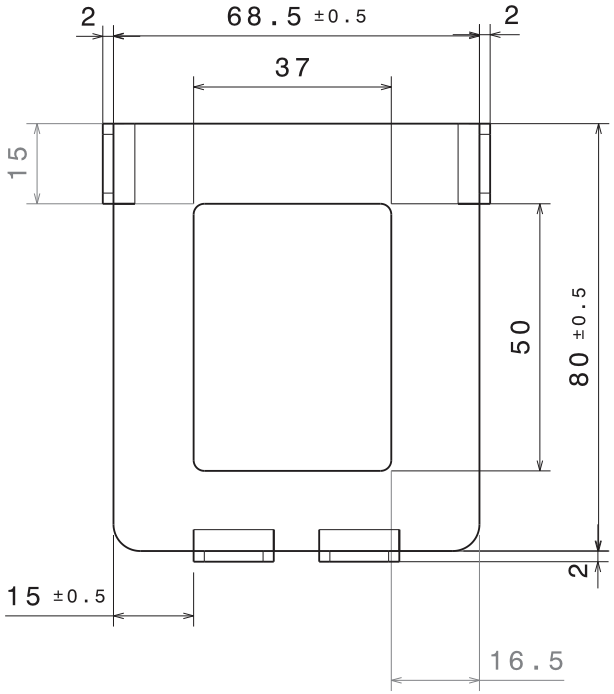

Vue de face
Echelle : 1:1

Congés laissées libres au fabriquant

Tolérances générales ISO 2768 - mK

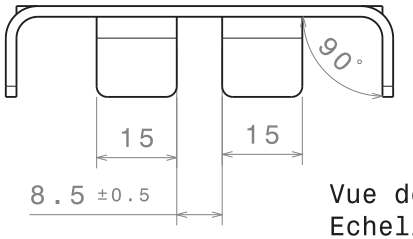

Vue de dessus
Echelle : 1:1

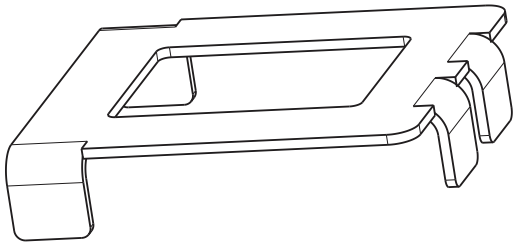

Vue isométrique
Echelle : 1:1

Taille A3		Ecurie Piston Sport Auto
Dessiné par Martin ZELLER	Date 11/24/2014	Désignation: Coté support batterie
Coordonnées 06 78 52 72 06 martin.zeller@ecl13.ec-lyon.fr		Quantité 2 / Matériau Aluminium au choix / Version 1.0
Plan vérifié par PMR		Echelle 1:1 / Numéro du plan 15-M-017 / Feuille 1/1

University	Ecole Centrale de Lyon	**Car #**	81	**Part Cost**	$ 3,78
System	Electrical			**Qty**	1
Assembly	Battery assembly				
Part	Main battery mount			**Extended Cost**	$ 3,78
P/N Base	EL 01002				
Suffix	AA				
Details					

ItemOrder	Material	Use	UnitCost	Size1	Unit1	Size2	Unit2	Area Name	Area	Length	Density	Quantity	Sub Total
10	Aluminum - Normal (per kg)	Stock material for part	$ 4,20	160	mm	2	mm	Rectangular area (160mm x 2mm)	3,20E-04	0,230	2710	1	$ 0,84
												Sub Total	**$ 0,84**

ItemOrder	Process	Use	UnitCost	Unit	Quantity	Multiplier	Mult. Val.	Sub Total
10	Machining Setup, Install and remove	Setup for laser cutting	$ 1,30	unit	1			$ 1,30
20	Laser Cut	Cutout shape	$ 0,01	cm	163,8	Material - Aluminum	1	$ 1,64
							Sub Total	**$ 2,94**

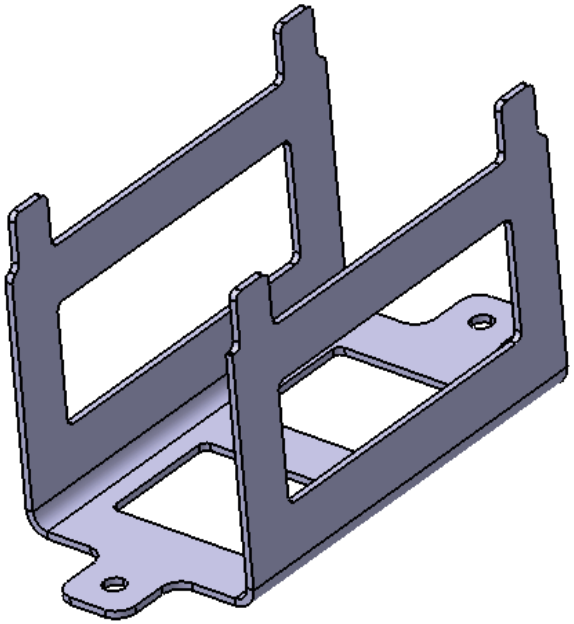

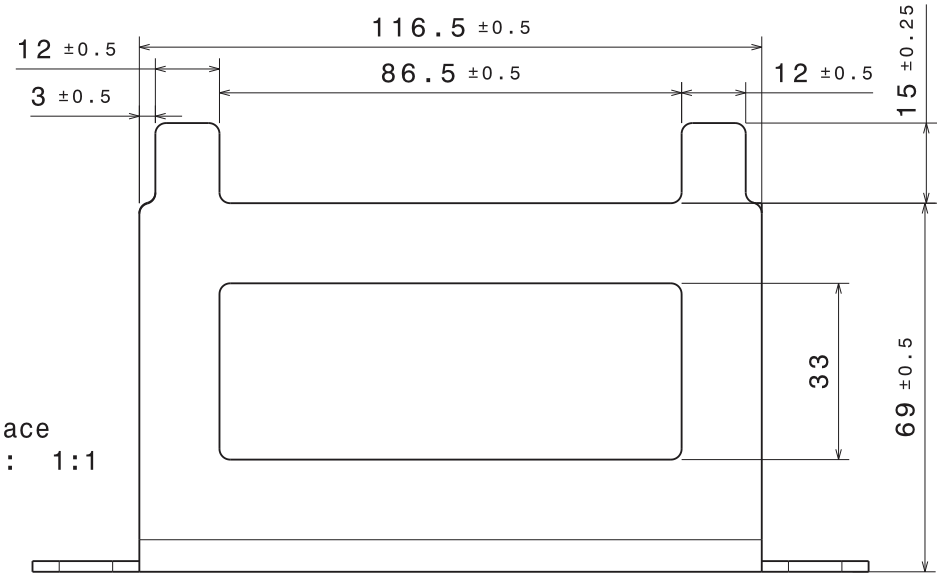

Vue de face
Echelle : 1:1

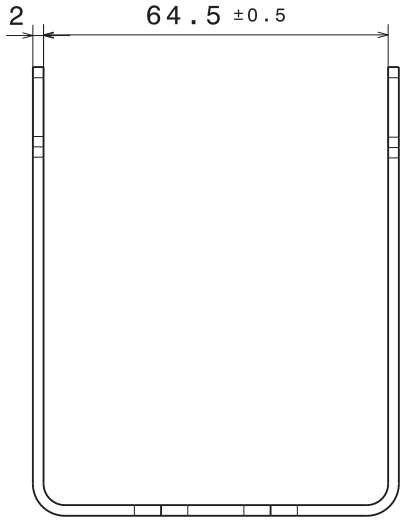

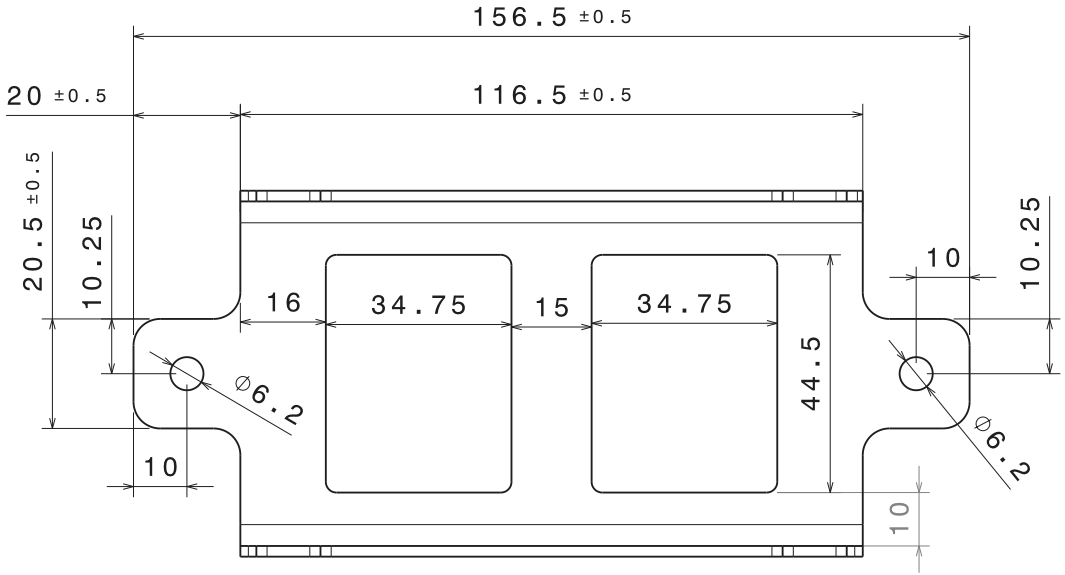

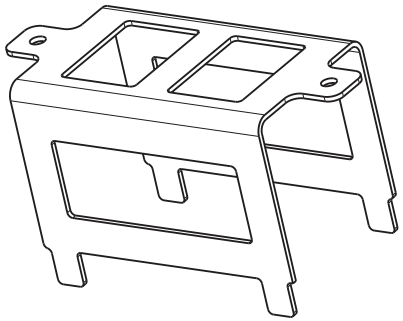

Vue isométrique
Echelle : 1:2

Rayon de pliage = 4mm

Congés laissés libres au fabriquant

Tolérances générales ISO 2768 - mK

274

Taille A3		Ecurie Piston Sport Auto
Dessiné par Martin ZELLER	Date 11/24/2014	Désignation: Corps support batterie
Coordonnées 06 78 52 72 06 martin.zeller@ecl13.ec-lyon.fr		Quantité 1 / Matériau Aluminium au choix / Version 1.0
Plan vérifié par PMR		Echelle 1:1 / Numéro du plan 15-M-016 / Feuille 1/1

University	Ecole Centrale de Lyon	**Car #**	81	**Part Cost**	$ 1,56
System	Electrical			**Qty**	5
Assembly	Battery assembly				
Part	Front tab			**Extended Cost**	$ 7,81
P/N Base	EL 01003				
Suffix	AA				
Details	Reused for master switch mount and ground tab, same tab as Filler tube, corner piece, overflow bottles, ..				

ItemOrder	Material	Use	UnitCost	Size1	Unit1	Size2	Unit2	Area Name	Area	Length	Density	Quantity	Sub Total
10	Steel, Mild	Mounts material	2,25	15	mm	2	mm	Rectangular area (plate) 15mm x 2mm	0,00003	0,02	7860	1	$ 0,01
20	Paint	Mounts paint	$ 10,00	0,0006	m^2							0,0006	$ 0,01
												Sub Total	**$ 0,02**

ItemOrder	Process	Use	UnitCost	Unit	Quantity	Multiplier	Mult. Val.	Sub Total
10	Machining Setup, Install and remove	Setup for machining	$ 1,30	unit	1			$ 1,30
20	Laser cut	Mounts cut	$ 0,01	cm	8,06	Material, Steel	3	$ 0,24
30	Aerosol apply	Mount painting	$ 5,25	m^2	0,0006			$ 0,00
							Sub Total	**$ 1,54**

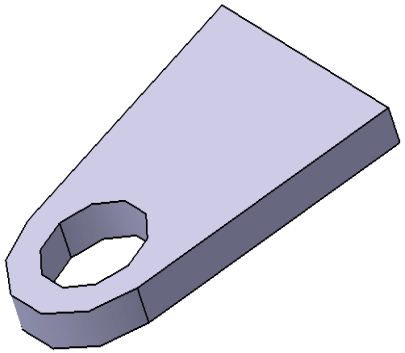

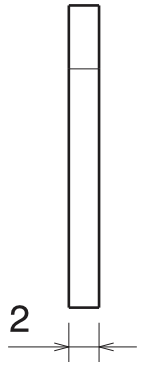

Vue de droite
Echelle : 2:1

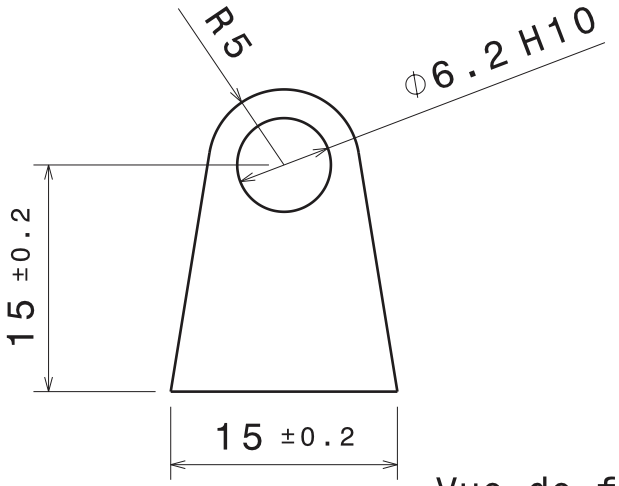

Vue de face
Echelle : 2:1

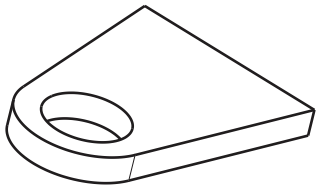

Vue isométrique
Echelle : 2:1

Tolérances générales ISO 2768 - mK

Taille A4		Ecurie Piston Sport Auto
Dessiné par Martin ZELLER	Date 11/23/2014	Désignation Chape standard motorisation
Coordonnées 06 78 52 72 06 martin.zeller@ecl13.ec-lyon.fr		Quantité 20 / Matériau S 235 / Version 1.0
Plan vérifié par CCN 276		Echelle 2:1 / Numéro du plan 15-M-011 / Feuille 1/1

University	Ecole Centrale de Lyon	**Car #**	81	**Part Cost**	$ 1,56
System	Electrical			**Qty**	1
Assembly	Battery assembly				
Part	Rear tab			**Extended Cost**	$ 1,56
P/N Base	EL 01004				
Suffix	AA				
Details					

ItemOrder	Material	Use	UnitCost	Size1	Unit1	Size2	Unit2	Area Name	Area	Length	Density	Quantity	Sub Total
10	Steel, Mild	Mounts material	2,25	15	mm	2	mm	Rectangular area (plate) 15mm x 2mm	0,00003	0,034	7860	1	$ 0,02
20	Paint	mounts paint	$ 10,00	0,00102	m^2				0,00102	1,000	1,00	1	$ 0,01
												Sub Total	**$ 0,01**

ItemOrder	Process	Use	UnitCost	Unit	Quantity	Multiplier	Mult. Val.	Sub Total
10	Machining Setup, Install and remove	Setup for machining	$ 1,30	unit	1			$ 1,30
20	Laser cut	Mounts cut	$ 0,01	cm	8,06	Material, Steel	3	$ 0,24
30	Aerosol apply	Mount painting	$ 5,25	m^2	0,00102			$ 0,01
							Sub Total	**$ 1,55**

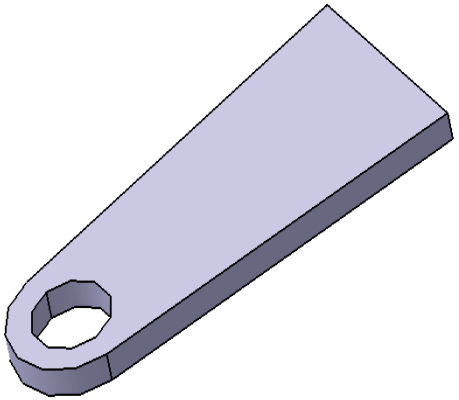

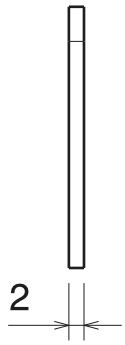

Vue de droite
Echelle : 1:1

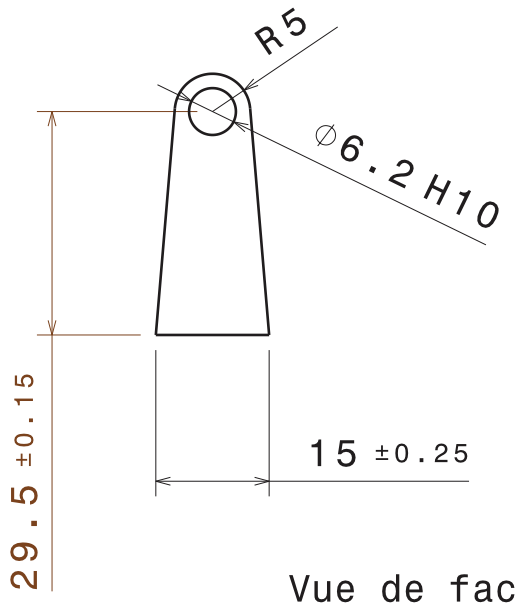

Vue de face
Echelle : 1:1

Vue isométrique
Echelle : 1:1

Tolérances générales ISO 2768 - mK

Taille A4		Ecurie Piston Sport Auto	
Dessiné par Martin ZELLER	Date 11/24/2014	Désignation Chape batterie avant	
Coordonnées 06 78 52 72 06 martin.zeller@ecl13.ec-lyon.fr		Quantité 2	Matériau S 235	Version 1.0
Plan vérifié par PMR		Echelle 1:1	Numéro du plan 15-M-018	Feuille 1/1

University	Ecole Centrale de Lyon	**Car #**	81	**Part Cost**	$ 2,81
System	Electrical			**Qty**	1
Assembly	Battery assembly				
Part	Master Switch mount			**Extended Cost**	$ 2,81
P/N Base	EL 01004				
Suffix	AA				
Details					

ItemOrder	Material	Use	UnitCost	Size1	Unit1	Size2	Unit2	Area Name	Area	Length	Density	Quantity	Sub Total
10	Aluminum - Normal (per kg)	Mounts material	4,2	150	mm	2	mm	Rectangular area (plate) 150mm x 2mm	0,0003	0,15	2710	1	$ 0,51
												Sub Total	**$ 0,51**

ItemOrder	Process	Use	UnitCost	Unit	Quantity	Multiplier	Mult. Val.	Sub Total
10	Machining Setup, Install and remove	Setup for laser cut	$ 1,30	unit	1			$ 1,30
20	Laser cut	Mounts cut	$ 0,01	cm	75	Material, Aluminum	1	$ 0,75
30	Sheet metal bends		$ 0,25	bend	1			$ 0,25
							Sub Total	**$ 2,30**

University	Ecole Centrale de Lyon	**Car #**	81	**Asm Cost**	38,11
System	Electrical			**Qty**	1
Assembly	Forward harness wiring				
P/N Base	EL A0002			**Extended Cost**	$ 38,11
Suffix	AA				
Details	Wiring harness fore of the firewall				

ItemOrder	Part	Part Cost	Quantity	Sub Total
10	Ground tab	$ 1,55	1	$ 1,55
			Sub Total	**$ 1,55**

ItemOrder	Material	Use	UnitCost	Size1	Unit1	Size2	Unit2	Area Name	Area	Length	Density	Quantity	Sub Total
10	Wire, Control / Signal	Wire from firewall to dashboard	$ 1,00	24	m							24	$ 24,00
20	Wire, Control / Signal	Brake over travel switch	$ 1,00	2,5	m							2,5	$ 2,50
30	Wire Sleeving, Split	Wire protection	$ 0,50	2	m							2	$ 1,00
40	Connector, Single Wire	Brake over travel switch	$ 0,05	2	wire							2	$ 0,10
												Sub Total	**$ 27,60**

ItemOrder	Process	Use	UnitCost	Unit	Quantity	Multiplier	Mult. Val.	Sub Total
10	Weld	Ground tab on frame	$ 0,15	cm	1,5			$ 0,23
20	Cut wire	Cut all wire on length	$ 0,08	unit	12			$ 0,96
30	Strip Wire	Strip wire ends	$ 0,08	unit	24			$ 1,92
40	Connector Assembley, Crimp	Over travel switch connector	$ 0,36	contacts	2			$ 0,72
50	Connector Assembley, Solder	Over travel switch connector	$ 0,52	contacts	3			$ 1,56
60	Cut (scissors, knife)	Cut sleeve	$ 0,06	cm	1			$ 0,06
70	Wire Dressing (Install and route)	Install and route wiring harness	$ 1,00	m	2			$ 2,00
80	Insert Bundle Into Tube or Sleeve	Install and route wiring harness	$ 0,20	m	2			$ 0,40
90	Install Tie Wrap (Zip Tie, Cable Clamp)	Install and route wiring harness	$ 0,09	unit	6			$ 0,54
							Sub Total	**$ 8,39**

ItemOrder	Fastener	Use	UnitCost	Size1	Unit1	Size2	Unit2	Quantity	Sub Total
10	Tie Wrap	Routes wiring harness	$ 0,04					6	$ 0,24
								Sub Total	**$ 0,24**

ItemOrder	Tooling	Use	UnitCost	Unit	Quantity	PVF	FractionIncluded	Sub Total
10	Welds - Welding Fixture	Ground tab	$ 500,00	point	2	3000	1	$ 0,33
							Sub Total	**$ 0,33**

University	Ecole Centrale de Lyon	**Car #**	81	**Part Cost**	$ 1,55
System	Engine and Drivetrain			**Qty**	1
Assembly	Forward harness wiring				
Part	Ground tab			**Extended Cost**	$ 1,55
P/N Base	EL 02001				
Suffix	AA				
Details	Standard tab for engine system (same as Filler tube, batterie, ...				

ItemOrder	Material	Use	UnitCost	Size1	Unit1	Size2	Unit2	Area Name	Area	Length	Density	Quantity	Sub Total
10	Steel, Mild	Mounts material	2,25	15	mm	2	mm	Rectangular area (plate) 15mm x 2mm	0,00003	0,02	7860	1	$ 0,01
												Sub Total	**$ 0,01**

ItemOrder	Process	Use	UnitCost	Unit	Quantity	Multiplier	Mult. Val.	Sub Total
10	Machining Setup, Install and remove	Setup for machining	$ 1,30	unit	1			$ 1,30
20	Laser cut	Mounts cut	$ 0,01	cm	8,06	Material, Steel	3	$ 0,24
							Sub Total	**$ 1,54**

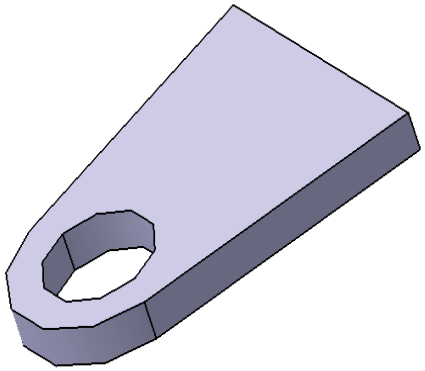

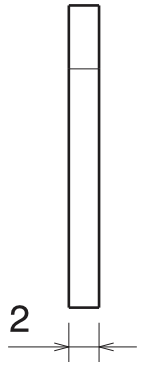

Vue de droite
Echelle : 2:1

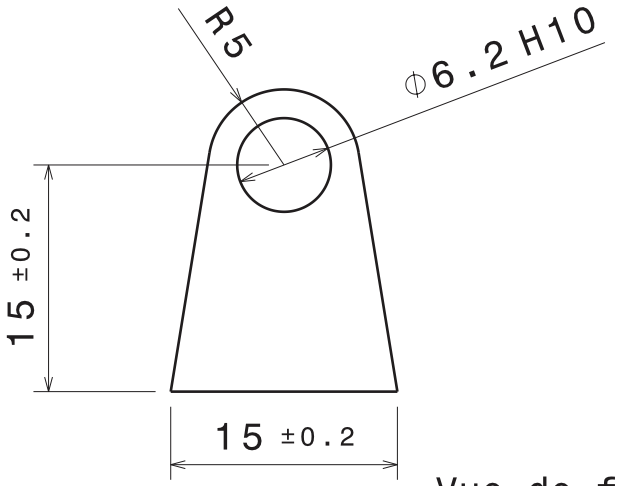

Vue de face
Echelle : 2:1

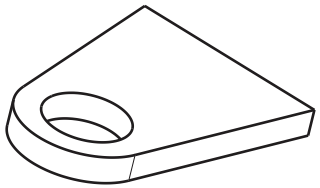

Vue isométrique
Echelle : 2:1

Tolérances générales ISO 2768 - mK

Taille A4		Ecurie Piston Sport Auto
Dessiné par Martin ZELLER	Date 11/23/2014	Désignation Chape standard motorisation
Coordonnées 06 78 52 72 06 martin.zeller@ecl13.ec-lyon.fr		Quantité 20 / Matériau S 235 / Version 1.0
Plan vérifié par CCN 282		Echelle 2:1 / Numéro du plan 15-M-011 / Feuille 1/1

University	Ecole Centrale de Lyon	**Car #**	81	**Asm Cost**	1 116,38
System	Electrical			**Qty**	1
Assembly	Rear Firewall				
P/N Base	EL A0003			**Extended Cost**	$ 1 116,38
Suffix	AA				
Details					

ItemOrder	Material	Use	UnitCost	Size1	Unit1	Size2	Unit2	Area Name	Area	Length	Density	Quantity	Sub Total
10	ECU, DTA, S60 Pro	ECU	$750,00	unit								1	$ 750,00
20	Tape	ECU fixation	$ -									1	$ -
30	Sensor, Angular position	TPS	$ 4,00	unit								1	$ 4,00
40	Sensor, Two State Position	Neutral Sensor	$ 4,00	unit								1	$ 4,00
50	Sensor, Two State Position	Oil pressure switch	$ 4,00	unit								1	$ 4,00
60	Sensor, Two State Position	Clutch switch	$ 4,00	unit								1	$ 4,00
70	Sensor, Thermocouple	ECT sensor	$ 8,00	unit								1	$ 8,00
80	Sensor, Wide Band Air Fuel Raito	Wideband Lambda sensor	$ 35,00	unit								1	$ 35,00
90	Connector, OEM quality	TPS	$ 0,50	3	pin(s)							3	$ 1,50
100	Connector, OEM quality	Neutral Sensor	$ 0,50	1	pin(s)							1	$ 0,50
110	Connector, OEM quality	Oil pressure switch	$ 0,50	1	pin(s)							1	$ 0,50
120	Connector, OEM quality	Clutch switch	$ 0,50	1	pin(s)							1	$ 0,50
130	Connector, OEM quality	ECT sensor	$ 0,50	3	pin(s)							3	$ 1,50
140	Connector, OEM quality	Wideband Lambda sensor	$ 0,50	6	pin(s)							6	$ 3,00
150	Connector, OEM quality	Ignition Pulse sensor	$ 0,50	2	pin(s)							2	$ 1,00
160	Connector, OEM quality	Cam pulse generator	$ 0,50	2	pin(s)							2	$ 1,00
170	Connector, OEM quality	ECU connector	$ 0,50	34	pin(s)	2	connectors					68	$ 34,00
180	Connector, OEM quality	Fan	$ 0,50	2	pin(s)							2	$ 1,00
190	Connector, OEM quality	Ignition Coils	$ 0,50	2	pin(s)							2	$ 1,00
200	Connector, OEM quality	Fuel injectors	$ 0,50	2	pin(s)							2	$ 1,00
210	Connector, High Power,> 2 Amps	Alternator	$ 2,00	3	pin(s)							3	$ 6,00
220	Connector, High Power,> 2 Amps	Regulator, Rectifier	$ 2,00	4	pin(s)							4	$ 8,00
230	Connector, Single Wire	Fuel Pump	$ 0,05	1	wire							1	$ 0,05
240	Connector, High Power,> 2 Amps	Starter motor	$ 2,00	1	pin(s)							1	$ 2,00
250	Connector, Single Wire	Ground ring	$ 0,05	8	wire							8	$ 0,40
260	Relay, Power	Engine stop, Fan, Fuel pump, Gear motor, Lambda, Monitoring, Starter	$ 4,00	7	unit							7	$ 28,00
270	Fuse Box	Fuse housing	$ 0,25	19	pin(s)							19	$ 4,75
280	Fuse, power	Various fuses	$ 1,00	8	unit							8	$ 8,00
290	Wire, control/signal	Wires for sensors and connection with "Forward wiring harness"	$ 1,00	40,8	m							40,8	$ 40,80
300	Wire Sleeving, Split	Wire routing and protection	$ 0,50	3	m							3	$ 1,50
310	Heat Shrink Tubing	To cover all soldered connections	$ 0,50	4	m							4	$ 2,00
												Sub Total	**$ 957,00**

ItemOrder	Process	Use	UnitCost	Unit	Quantity	Multiplier	Mult. Val.	Sub Total
10	Cut wire	Cut all wires for sensors to length	$ 0,08	unit	22			$ 1,76
20	Strip wire	Strip wire ends	$ 0,08	unit	44			$ 3,52
30	Cut wire	Cut other signal/control wires to length	$ 0,08	unit	32			$ 2,56
40	Strip wire	Strip wire ends	$ 0,08	unit	64			$ 5,12
50	Cut wire	Cut all power wires to length	$ 0,08	unit	30			$ 2,40
60	Strip wire	Strip wire ends	$ 0,08	unit	60			$ 4,80
70	Crimp Wire	All single-wire connectors	$ 0,17	unit	10			$ 1,70
80	Connector Assembley, Crimp	Crimp all other connector terminals	$ 0,36	contacts	125			$ 45,00
90	Attach Wire, Ring	Ground rings and fuel pump	$ 0,48	unit	9			$ 4,32
100	Attach Wire, Solder wire, not bent	All wire-to-wire connections	$ 0,52	unit	30			$ 15,60
110	Cut (scissors, knife)	Cut heat schrink	$ 0,06	cm	1	repreat	50	$ 3,00
120	Shrink Tube	Cover all soldered section	$ 0,15	cm	400			$ 60,00
130	Wire dressing (install and route)	install and route wiring harness	$ 1,00	m	3			$ 3,00
140	Insert Bundle into Tube or Sleeve	install and route wiring harness	$ 0,20	m	3			$ 0,60
150	Taping Wire Bundle	Tape large wire bundles	$ 0,04	cm	20			$ 0,80
160	Install Tie Wrap	install and route wiring harness	$ 0,09	unit	15			$ 1,35
170	Tape	ECU fixation	$ 0,80	m	0,6			$ 0,48
180	Assemble, 3kg, Loose	ECU installation	$ 0,19	unit	1			$ 0,19
190	Ratchet <= 6.35 mm	Tighten M6 ground bolt	$ 0,50	unit	1			$ 0,50
200	Reaction Tool <= 6.35 mm	Reaction tool for M6 nut	$ 0,25	unit	1			$ 0,25
210	Assemble, 1kg, Loose	Put voltage regulator in place	$ 0,06	unit	1			$ 0,06
220	Ratchet <= 6.35 mm	Tighten M6 voltage regulator bolt	$ 0,50	unit	2			$ 1,00
230	Reaction Tool <= 6.35 mm	Reaction tool for M6 nut	$ 0,25	unit	2			$ 0,50
							Sub Total	**$ 158,51**

ItemOrder	Fastener	Use	UnitCost	Size1	Unit1	Size2	Unit2	Quantity	Sub Total
10	Bolt, Grade 8.8 (SAE 5)	M6 bolt for Ground tab (in battery assembly) + voltage regulator	$ 0,04	6	mm	20	mm	3	$ 0,12
20	Nut, Grade 8.8 (SAE 5)	M6 nut	$ 0,03	6	mm			3	$ 0,09
30	Washer, Grade 8.8 (SAE 5)	M6 washer	$ 0,01	6	mm			6	$ 0,06
40	Tie Wrap	Wiring harness routing	$ 0,04					15	$ 0,60
								Sub Total	**$ 0,87**

University	Ecole Centrale de Lyon	**Car #**	81	**Asm Cost**	$ 696,53
System	Electrical			**Qty**	1
Assembly	Monitoring System				
P/N Base	EL A0004			**Extended Cost**	$ 696,53
Suffix	AA				
Details	Data aquisition and store and driver information system				

ItemOrder	Part	Part Cost	Quantity	Sub Total
10	Sensors	$ 192,37	1	$ 192,37
20	Data Logging	$ 282,99	1	$ 282,99
30	Dashboard	$ 106,78	1	$ 106,78
40	Welded Tabs	$ 5,88	1	$ 5,88
50	Sensor Tabs	$ 69,45	1	$ 69,45
			Sub Total	**$ 657,46**

ItemOrder	Process	Use	UnitCost	Unit	Quantity	Multiplier	Mult. Val.	Sub Total
10	Weld	Weld tabs on chassis	$ 0,15	cm	14,8	Material - Steel	3	$ 6,66
20	Assemble, 1 kg, loose	Assemble housing on tabs	$ 0,06	unit	3			$ 0,18
30	Ratchet <= 6.35 mm	Fasten housing on tabs	$ 0,50	unit	8			$ 4,00
40	Assemble, 1 kg, interference	Brake pressure sensors and switch	$ 0,19	unit	3			$ 0,57
50	Assemble, 1 kg, line on line	Hall and LVDT sensors	$ 0,11	unit	9			$ 0,99
60	Assemble, 1 kg, loose	Assemble Brake light	$ 0,06	unit	1			$ 0,06
70	Ratchet <= 6.35 mm	Fasten Brake light and sensors on tabs	$ 0,50	unit	16			$ 8,00
80	Assemble, 1 kg, line on line	Assemble dashboard	$ 0,11	unit	1			$ 0,11
90	Ratchet <= 6.35 mm	Fasten dashboard on tabs	$ 0,50	unit	4			$ 2,00
100	Wire Dressing (Install and route)	Install sensor wires	$ 1,00	m	2,5			$ 2,50
110	Lay Wire, Power	Install CANbus and supply wire	$ 0,03	m	8			$ 0,24
120	Lay Wire, Control	Brake Light wiring	$ 0,02	m	2			$ 0,04
130	Wire Dressing (Install and route)	Install dashboard wires	$ 1,00	m	0,5			$ 0,50
140	Install tie wrap	Wrap wires around chassis tubes	$ 0,09	unit	50			$ 4,69
							Sub Total	**$ 30,54**

ItemOrder	Fastener	Use	UnitCost	Size1	Unit1	Size2	Unit2	Quantity	Sub Total
10	Bolt, Grade 8.8 (SAE 5)	LVDT sensor bolts	$ 0,07	6	mm	30	mm	10	$ 0,65
20	Nut, Grade 8.8 (SAE 5)	LVDT sensor nuts	$ 0,03	6	mm			10	$ 0,30
30	Bolt, Grade 8.8 (SAE 5)	Housing tab bolts	$ 0,04	6	mm	15	mm	8	$ 0,29
40	Nut, Grade 8.8 (SAE 5)	Housing tab nuts	$ 0,03	6	mm			8	$ 0,24
50	Bolt, Grade 8.8 (SAE 5)	Dashboard bolts	$ 0,07	6	mm	30	mm	4	$ 0,26
60	Nut, Grade 8.8 (SAE 5)	Dashboard nuts	$ 0,03	6	mm			4	$ 0,12
70	Tie wrap	Secure wiring around chassis tubes	$ 0,04		unit			50	$ 2,00
								Sub Total	**$ 3,86**

ItemOrder	Tooling	Use	UnitCost	Unit	Quantity	PVF	FractionIncluded	Sub Total
10	Weld	Tabs weld points	$ 500,00	point	28	3000	1	$ 4,67
							Sub Total	**$ 4,67**

University	Ecole Centrale de Lyon	**Car #**	81	**Part Cost**	$ 192,37
System	Electrical			**Qty**	1
Assembly	Monitoring System				
Part	Sensors			**Extended Cost**	$ 192,37
P/N Base	EL 04001				
Suffix	AA				
Details	Sensors, sensor wiring and brake light				

ItemOrder	Material	Use	UnitCost	Size1	Unit1	Size2	Unit2	Area Name	Area	Length	Density	Quantity	Sub Total
10	Sensor, Fluid Pressure	Brake fluid pressure sensor	$ 4,00		unit							2	$ 8,00
20	Sensor, Hall Effect	Wheel speed sensor	$ 4,00		unit							4	$ 16,00
30	Sensor, LVDT	Damper stroke sensor and steering rack position sensor	$ 12,00		unit							5	$ 60,00
40	Brake Light Pressure Switch Banjo Bolt	Brake light switch	$ 8,00		unit							1	$ 8,00
50	Lamp, Brake with housing	Brake light	$ 4,00		unit							1	$ 4,00
60	Fitting/L.P./Tee/Flare-Flare-Pipe/Steel/	Brake fluid circuit junction	$ 9,50	3	mm							3	$ 28,50
70	Wire, Signal	Signal from sensors	$ 1,00	8	m							1	$ 8,00
80	Wire, Control	Sensors alimentation	$ 1,00	16	m							1	$ 16,00
90	Wire, Power	Brake light power	$ 3,00	3	m							1	$ 9,00
100	Connector, OEM quality	Housing interface	$ 0,50	3	pins							11	$ 16,50
110	Heat Shrink Tubing	Secure connections	$ 0,50	0,3	m							1	$ 0,15
												Sub Total	**$ 174,15**

ItemOrder	Process	Use	UnitCost	Unit	Quantity	Multiplier	Mult. Val.	Sub Total
10	Cut Wire	Preparing wires for connectors	$ 0,08	unit	68			$ 5,44
20	Strip Wire	Preparing wires for connectors	$ 0,08	unit	68			$ 5,44
30	Cut (scissors, knife)	Heat shrink tube cuting	$ 0,06	cm	30			$ 1,80
40	Attach Wire, Solder wire, not bent	Brake light sensor welding	$ 0,52	unit	2			$ 1,04
50	Shrink Tube	Cover connections	$ 0,15	cm	30			$ 4,50
60	Connector assembly, crimp	Assemble wires in connectors	$ 0,36	contact	66			$ 23,76
70	Insert Bundle Into Tube or Sleeve	Insert wires into sleeve	$ 0,02	m	8			$ 0,16
							Sub Total	**$ 18,22**

University	Ecole Centrale de Lyon	**Car #**	81	**Part Cost**	$ 282,99
System	Electrical			**Qty**	1
Assembly	Monitoring System				
Part	Data Logging			**Extended Cost**	$ 282,99
P/N Base	EL 04002				
Suffix	AA				
Details	Data Logging, Communication and Supply Wiring				

ItemOrder	Material	Use	UnitCost	Size1	Unit1	Size2	Unit2	Area Name	Area	Length	Density	Quantity	Sub Total
10	Chassis Control Module, Baseline Enclosure	Arduinos and housings	$ 25,00		unit							3	$ 75,00
20	Chassis Control Module, +Dahsboard	Front card	$ 20,00		unit							1	$ 20,00
30	Chassis Control Module, +Automatic Shifter	Mid card, including Cirly made card	$ 5,00		unit							1	$ 5,00
40	Chassis Control Module, +Dahsboard	Rear card, including SD module	$ 20,00		unit							1	$ 20,00
50	Wire, Power	CANbus and power supply 6 conductors wire	$ 3,00	2,5	m							1	$ 7,50
60	Connector, OEM quality	Connectors for sensors and gearbox	$ 0,50	12	pins							3	$ 18,00
70	Connector, OEM quality	Connectors for dashboard and communication	$ 0,50	6	pins							5	$ 15,00
80	Connector, OEM quality	Connectors for communication	$ 0,50	4	pins							2	$ 4,00
90	Connector, OEM quality	Connector for suply	$ 0,50	2	pins							1	$ 1,00
100	Heat Shrink Tubing	Secure connections	$ 0,50	0,4	m							1	$ 0,20
												Sub Total	**$ 165,70**

ItemOrder	Process	Use	UnitCost	Unit	Quantity	Multiplier	Mult. Val.	Sub Total
10	Drilled holes < 25.4 mm dia.	Drilling holes for connectors installation	$ 0,35	hole	8	Material - Aluminium	1	$ 2,80
20	Drilled hole < 50.8 mm dia.	Drilling holes for 12 pins connectors	$ 0,70	hole	3	Material - Aluminium	1	$ 2,10
30	Assemble, 1 kg, loose	Assemble cards inside housing	$ 0,06	unit	3			$ 0,18
40	Cut Wire	Preparing wires for connectors	$ 0,08	unit	132			$ 10,56
50	Strip Wire	Preparing wires for connectors	$ 0,08	unit	128			$ 10,24
60	Strip multiconductor	Preparing CANbus and suply wire for connectors	$ 0,78	unit	24			$ 18,72
70	Cut (scissors, knife)	Heat shrink tube cuting	$ 0,06	cm	40			$ 2,40
80	Connector assembly, crimp	Assemble wires in connectors	$ 0,36	contact	152			$ 54,72
90	Shrink Tube	Cover connections	$ 0,15	cm	40			$ 6,00
100	Connector Install, Circular, Screw Thread	Connectors installation in housing	$ 0,24	unit	10			$ 2,40
110	Screwdriver > 1 Turn	Closing housing cover	$ 0,50	unit	14			$ 7,00
							Sub Total	**$ 117,12**

ItemOrder	Fastener	Use	UnitCost	Size1	Unit1	Size2	Unit2	Quantity	Sub Total
10	Bolt, Grade 8.8 (SAE 5)	Housing cover bolts	$ 0,01	3	mm	15	mm	14	$ 0,17
								Sub Total	**$ 0,17**

University	Ecole Centrale de Lyon	**Car #**	81	**Part Cost**	$ 106,78
System	Electrical			**Qty**	1
Assembly	Monitoring System				
Part	Dashboard			**Extended Cost**	$ 106,78
P/N Base	EL 04003				
Suffix	AA				
Details	Dashboard display and switch				

ItemOrder	Material	Use	UnitCost	Size1	Unit1	Size2	Unit2	Area Name	Area	Length	Density	Quantity	Sub Total
10	Carbon Fiber, 1 Ply	Composite	$ 200,00	0,011988	kg				0,036000			2	$ 4,80
20	Glass Fiber, 1 Ply	Composite	$ 100,00	0,011988	kg				0,036000			1	$ 1,20
30	Structural Foam	Composite	$ 125,00	0,0081	kg				0,036000		0,08	1	$ 1,01
40	Display, LCD, Rectangle	Drivers display	$ 48,75	7,8	cm	5	cm	Rectangular area	0,003900			1	$ 48,75
50	Aluminum, Normal	LCD plate	$ 4,20	0,00972	kg	2	mm	Rectangular area	0,001800		2 700,00	1	$ 0,04
60	Lamp, LED	Drivers display	$ 0,50		unit							4	$ 2,00
70	Switch, Kill	Emergency kill	$ 3,00		unit							1	$ 3,00
80	Switch, Toggle	Contact, force fan	$ 1,00		unit							2	$ 2,00
90	Switch, Pushbutton	Homing, neutral, engine start, launch control	$ 1,00		unit							4	$ 4,00
100	Wire, Control	6 conductor wire to the front card	$ 1,00	0,6	m							1	$ 0,60
110	Wire, Control	Wiring	$ 1,00	1,5	m							1	$ 1,50
120	Heat Shrink Tubing	Secure connections	$ 0,50	0,5	m							1	$ 0,25
												Sub Total	**$ 69,15**

ItemOrder	Process	Use	UnitCost	Unit	Quantity	Multiplier	Mult. Val.	Sub Total
10	Lamination, Manual	Lamination of the 4 plys and the foam	$ 35,00	m²	0,03600	Repeat 5	5	$ 6,30
20	Resin application, Manual	Resin application on the 4 plys	$ 5,00	m²	0,03600	Repeat 4	4	$ 0,72
40	Vacuum Form		$ 10,00	m²	0,03600			$ 0,36
50	Cure, Room Temperature	Curing	$ 10,00	m²	0,03600			$ 0,36
60	Machining Setup, Install and remove	Setup for machining	$ 1,30	unit	1			$ 1,30
70	Waterjet Cut	Cutting the outer profil	$ 0,01	cm	1,446	Material - Composite	2	$ 0,03
80	Drilled holes < 25.4 mm dia.	Holes for fixing	$ 0,35	unit	4	Material - Composite	2	$ 2,80
90	Machining Setup, Install and remove	Setup for laser cutting	$ 1,30	unit	1			$ 1,30
100	Laser Cut	LCD plate laser cutting	$ 0,01	cm	61,6	Material - Aluminium	1	$ 0,62
110	Drilled holes < 25.4 mm dia.	LCD plate hole drilling	$ 0,35	hole	4	Material - Aluminium	1	$ 1,40
120	Cut Wire	Preparing wires for connection	$ 0,08	unit	20			$ 1,60
130	Strip Wire	Preparing wires for connection	$ 0,08	unit	20			$ 1,60
140	Crimp Wire	Prepare wire connection with switches and leds	$ 0,17	unit	11			$ 1,83
150	Attach Wire, Solder wire, not bent	Solder LCD wiring	$ 0,52	unit	9			$ 4,68
160	Cut (scissors, knife)	Heat shrink tube cuting	$ 0,06	cm	50			$ 3,00

170	Shrink Tube	Cover connections	$ 0,15	cm	50			$ 7,50
180	Assemble, 1 kg, Loose	Assemble elements on the carbon dashboard	$ 0,06	unit	1			$ 0,06
190	Ratchet <= 6.35 mm	Fasten LCD plate	$ 0,50	unit	4			$ 2,00
200	Insert Bundle Into Tube or Sleeve	Insert wires into sleeve	$ 0,02	m	0,3			$ 0,01
							Sub Total	**$ 37,47**

ItemOrder	Fastener	Use	UnitCost	Size1	Unit1	Size2	Unit2	Quantity	Sub Total
10	Bolt, Grade 8.8 (SAE 5)	LCD plate bolts	$ 0,02	4	mm	15	mm	4	$ 0,07
20	Nut, Grade 8.8 (SAE 5)	LCD plate nuts	$ 0,02	4	mm			4	$ 0,08
								Sub Total	**$ 0,15**

ItemOrder	Tooling	Use	UnitCost	Unit	Quantity	PVF	FracIncld	Sub Total
10	Lamination - Flat Panel Tool	Mold for all plates	$1 500,00	m²	0,03600	3000	1	$ 0,02
							Sub Total	**$ 0,02**

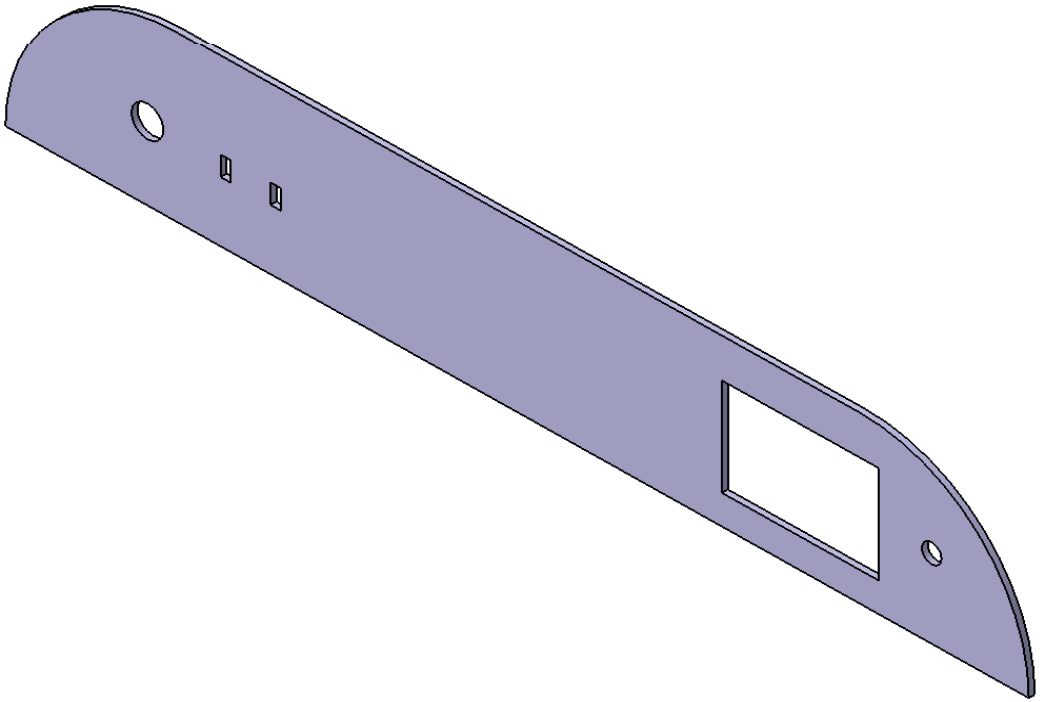

Vue de face
Echelle : 1:2

Taille A4		Ecurie Piston Sport Auto
Dessiné par Clément CASTELLAN	Date 23/01/2015	Désignation: Tableau de bord
Coordonnées 06 34 33 50 85 clement.castellan@ecl13.ec-lyon.fr		Quantité 1 / Matériau Composite / Version 0.9
Plan vérifié par XXX	290	Echelle 1:2 / Numéro du plan XXX / Feuille 1/1

University	Ecole Centrale de Lyon	**Car #**	81	**Part Cost**	$ 5,88
System	Electrical			**Qty**	1
Assembly	Monitoring System				
Part	Welded Tabs			**Extended Cost**	$ 5,88
P/N Base	EL 04004				
Suffix	AA				
Details	Housing tabs, dashboard tabs and brake light tabs				

ItemOrder	Material	Use	UnitCost	Size1	Unit1	Size2	Unit2	Area Name	Area	Length	Density	Quantity	Sub Total
10	Steel, Alloy	Brake light tabs	$ 20,25	0,003	kg	1,50	mm	Rectangular area	0,000240		7 800,00	2	$ 0,11
20	Steel, Alloy	Front housing front tab	$ 20,25	0,005	kg	2,00	mm	Rectangular area	0,000350	30	7 800,00	1	$ 0,11
30	Steel, Alloy	Front housing rear tab	$ 20,25	0,004	kg	2,00	mm	Rectangular area	0,000260	21	7 800,00	2	$ 0,16
40	Steel, Alloy	Mid housing front tab	$ 20,25	0,004	kg	1,50	mm	Rectangular area	0,000300	25	7 800,00	2	$ 0,14
50	Steel, Alloy	Mid housing rear tab	$ 20,25	0,003	kg	1,50	mm	Rectangular area	0,000230	18	7 800,00	1	$ 0,05
60	Steel, Alloy	Rear housing rear tab	$ 20,25	0,003	kg	1,50	mm	Rectangular area	0,000250	20	7 800,00	2	$ 0,12
70	Steel, Alloy	Dashboard tabs	$ 20,25	0,005	kg	2	mm	Rectangular area	0,000300	20,00	7 800,00	4	$ 0,38
80	Paint	Tab painting	$ 10,00	0,007760	m²							1	$ 0,08
												Sub Total	**$ 1,16**

ItemOrder	Process	Use	UnitCost	Unit	Quantity	Multiplier	Mult. Val.	Sub Total
10	Machining Setup, Install and remove	Setup for laser cutting	$ 1,30	unit	1			$ 1,30
20	Laser Cut	Brake light tabs	$ 0,01	cm	13,8	Material - Steel	3	$ 0,41
30	Laser Cut	Front housing front tab	$ 0,01	cm	10,2	Material - Steel	3	$ 0,31
40	Laser Cut	Front housing rear tab	$ 0,01	cm	16,6	Material - Steel	3	$ 0,50
50	Laser Cut	Motor housing front tab	$ 0,01	cm	18,4	Material - Steel	3	$ 0,55
60	Laser Cut	Motor housing rear tab	$ 0,01	cm	5,8	Material - Steel	3	$ 0,17
70	Laser Cut	Rear housing rear tab	$ 0,01	cm	16,4	Material - Steel	3	$ 0,49
80	Laser Cut	Dashboard tabs	$ 0,01	cm	32,7	Material - Steel	3	$ 0,98
90	Aerosol Apply	Tab painting	$ 0,01	m²	0,007760	Material - Steel	3	$ 0,00
							Sub Total	**$ 4,72**

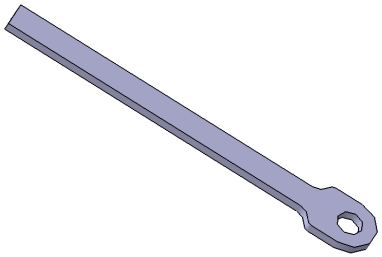

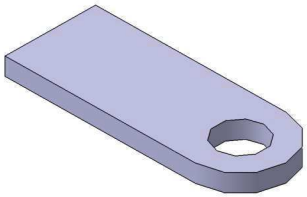

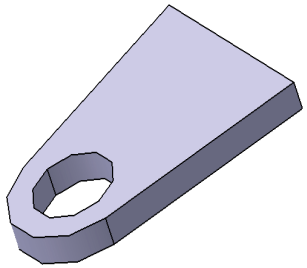

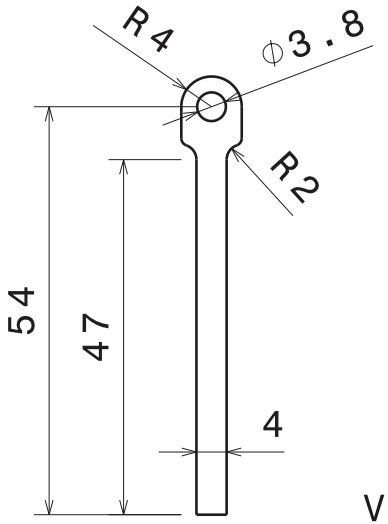

Vue de face
Echelle : 1:1

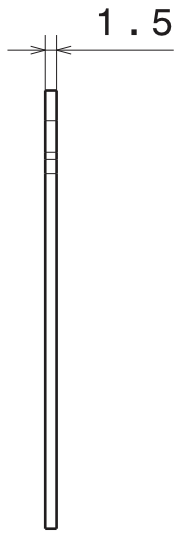

Vue de gauche
Echelle : 1:1

Tolérances générales ISO 2768 mK

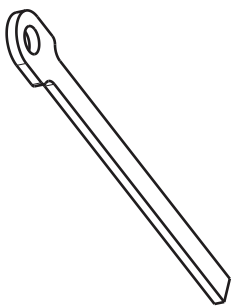

Vue isométrique
Echelle : 1:1

Taille A4		Ecurie Piston Sport Auto
Dessiné par Pierre Merlier	Date 10/02/2014	Désignation Chape Brake Light
Coordonnées 06 34 50 32 42 pierre.merlier@ecl13.ec-lyon.fr		Quantité 2 / Matériau Acier S235 / Version 1.0
Plan vérifié par JGR 292		Echelle 1:1 / Numéro du plan 15-M-090 / Feuille 1/1

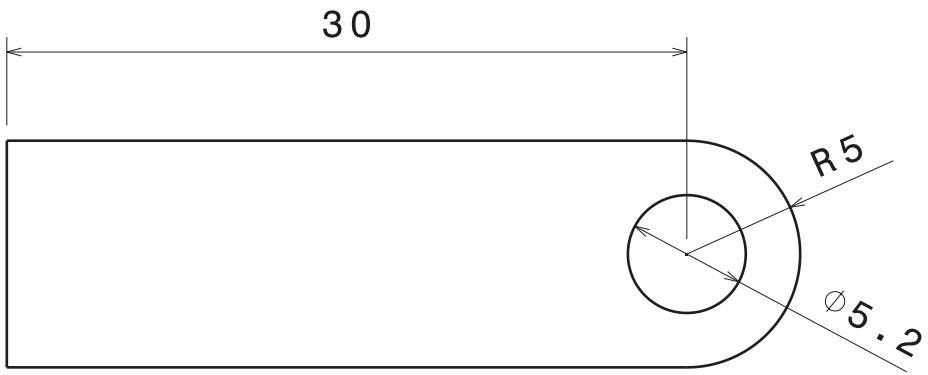

Vue de face

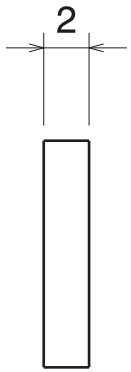

Vue de gauche

Tolérances générales ISO 2768 - mK

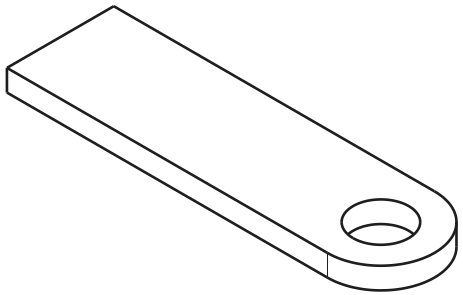

Taille A4		Ecurie Piston Sport Auto
Dessiné par Victor GAISNE	Date 23/12/2014	Désignation Chape Monitoring B.av. avant
Coordonnées 06 01 42 70 56 victor.gaisne@ecl13.ec-lyon.fr		Quantité 1 / Matériau S 235 / Version 1.0
Plan vérifié par CCN 293		Echelle 3:1 / Numéro du plan 15-M-039 / Feuille 1/1

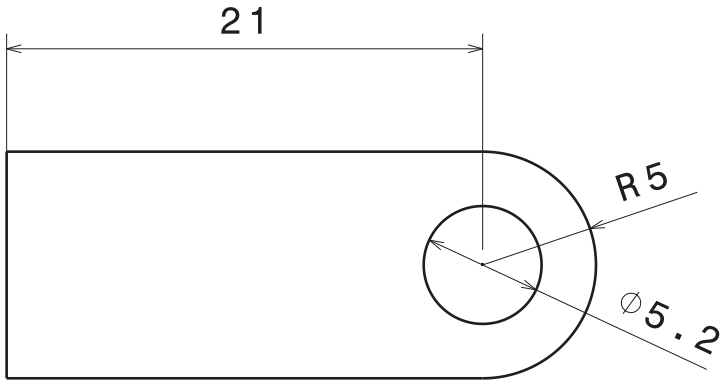

Vue de face

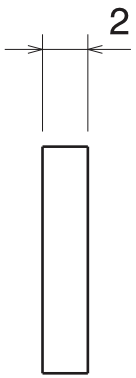

Vue de gauche

Tolérances générales ISO 2768 - mK

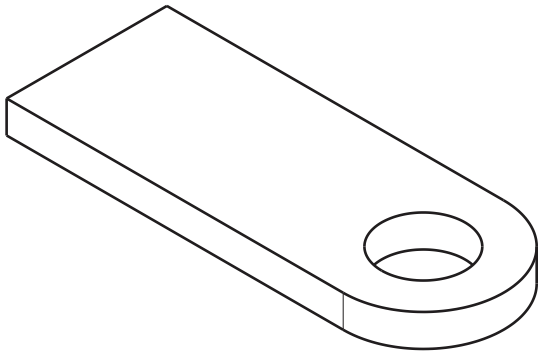

Taille A4		Ecurie Piston Sport Auto
Dessiné par Victor GAISNE	Date 23/12/2014	Désignation Chape Monitoring B.av. arrière
Coordonnées 06 01 42 70 56 victor.gaisne@ecl13.ec-lyon.fr		Quantité 2 / Matériau S 235 / Version 1.0
Plan vérifié par CCN 294		Echelle 3:1 / Numéro du plan 15-M-040 / Feuille 1/1

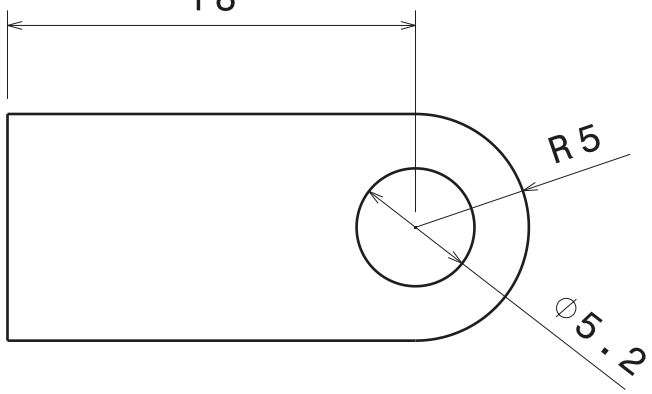

Vue de face

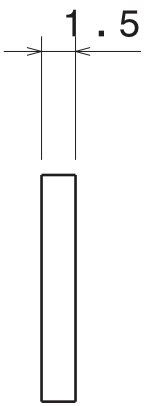

Vue de gauche

Tolérances générales ISO 2768 - mK

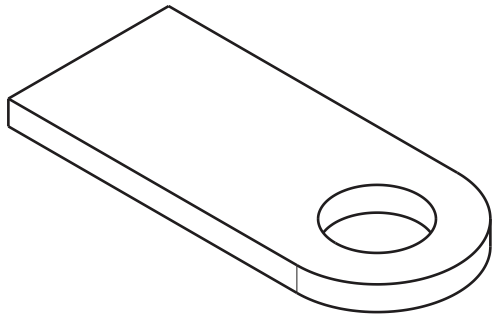

Taille A4		Ecurie Piston Sport Auto
Dessiné par Victor GAISNE	Date 23/12/2014	Désignation Chape Monitoring B.mo. arrière
Coordonnées 06 01 42 70 56 victor.gaisne@ecl13.ec-lyon.fr		Quantité 1 / Matériau S 235 / Version 1.0
Plan vérifié par CCN 295		Echelle 3:1 / Numéro du plan 15-M-042 / Feuille 1/1

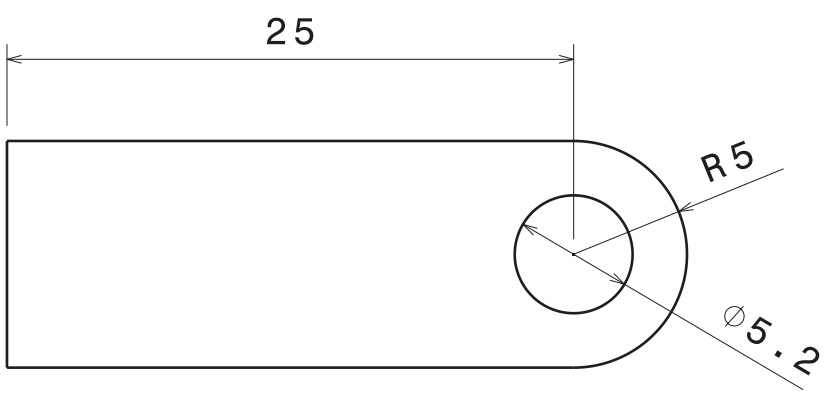

Vue de face

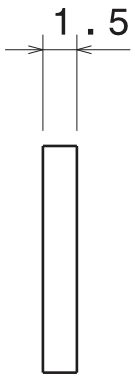

Vue de gauche

Tolérances générales ISO 2768 - mK

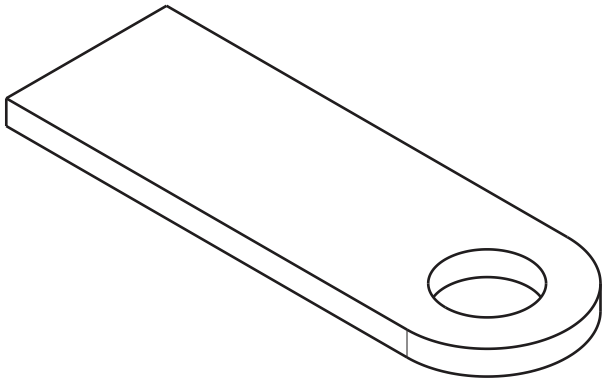

Taille A4		Ecurie Piston Sport Auto
Dessiné par Victor GAISNE	Date 23/12/2014	Désignation Chape Monitoring B.mo. avant
Coordonnées 06 01 42 70 56 victor.gaisne@ecl13.ec-lyon.fr		Quantité 2 / Matériau S 235 / Version 1.0
Plan vérifié par CCN 296		Echelle 3:1 / Numéro du plan 15-M-041 / Feuille 1/1

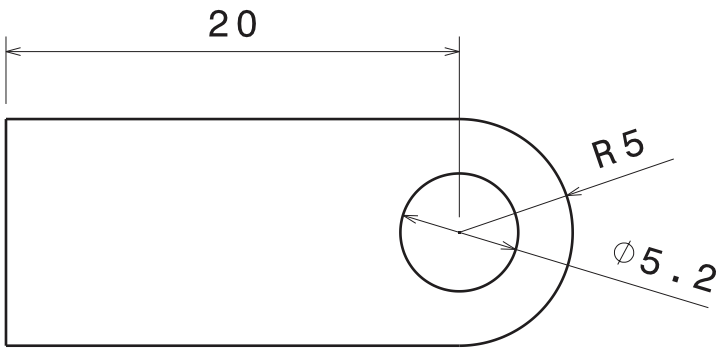

Vue de face

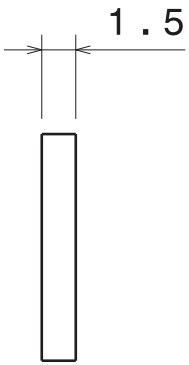

Vue de gauche

Tolérances générales ISO 2768 - mK

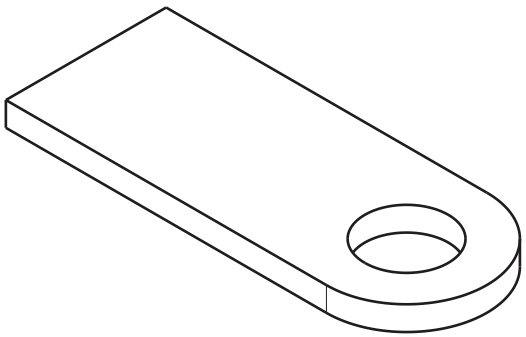

Taille A4		Ecurie Piston Sport Auto
Dessiné par Victor GAISNE	Date 23/12/2014	Désignation Chape Monitoring B.ar.
Coordonnées 06 01 42 70 56 victor.gaisne@ecl13.ec-lyon.fr		Quantité 2 / Matériau S 235 / Version 1.0
Plan vérifié par CCN 297		Echelle 3:1 / Numéro du plan 15-M-043 / Feuille 1/1

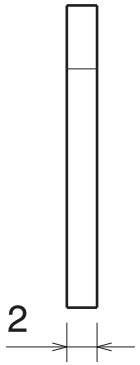

Vue de droite
Echelle : 2:1

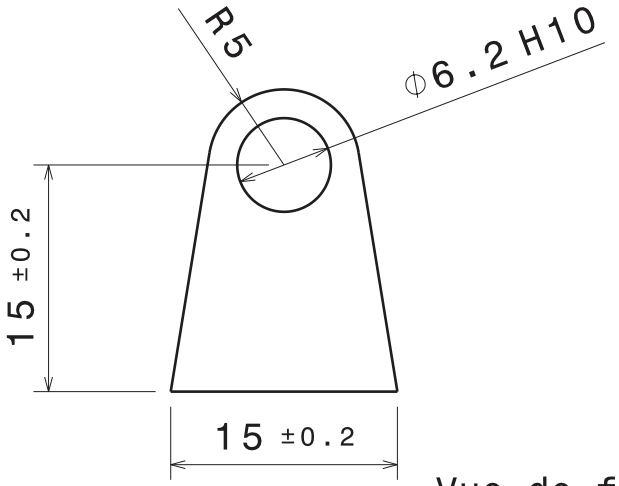

Vue de face
Echelle : 2:1

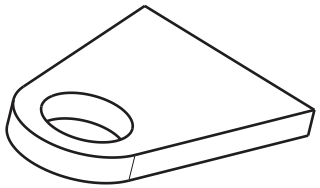

Vue isométrique
Echelle : 2:1

Tolérances générales ISO 2768 - mK

Taille A4		Ecurie Piston Sport Auto
Dessiné par Martin ZELLER	Date 11/23/2014	Désignation Chape standard motorisation
Coordonnées 06 78 52 72 06 martin.zeller@ecl13.ec-lyon.fr		Quantité 20 / Matériau S 235 / Version 1.0
Plan vérifié par CCN 298		Echelle 2:1 / Numéro du plan 15-M-011 / Feuille 1/1

University	Ecole Centrale de Lyon	**Car #**	81	**Part Cost**	$ 69,45
System	Electrical			**Qty**	1
Assembly	Monitoring System				
Part	Sensor Tabs			**Extended Cost**	$ 69,45
P/N Base	EL 04005				
Suffix	AA				
Details	LVDT and Hall sensors tabs				

ItemOrder	Material	Use	UnitCost	Size1	Unit1	Size2	Unit2	Area Name	Area	Length	Density	Quantity	Sub Total
10	Aluminum, Normal	Hall sensor tabs	$ 4,20	0,00165	kg	2	mm	Rectangular area	0,000825	55,00	2700	4	$ 0,03
20	Aluminum, Normal	LVDT sensor tab	$ 4,20	0,0015	kg	2	mm	Rectangular area	0	100,00	2700	5	$ 0,03
30	Aluminum, Normal	LVDT sensor second tab	$ 4,20	0,00174	kg	2	mm	Rectangular area	0	58,00	2700	5	$ 0,04
												Sub Total	**$ 0,10**

ItemOrder	Process	Use	UnitCost	Unit	Quantity	Multiplier	Mult. Val.	Sub Total
10	Sheet Metal Saw Cut	Hall sensor tabs cutting	$ 0,20	cm	56	Material - Aluminium	1	$ 11,20
20	Sheet metal bends	Hall sensor tabs bending	$ 0,25	bend	8			$ 2,00
30	Drilled holes < 25.4 mm dia.	Hall sensors tabs hole drilling	$ 0,35	hole	8	Material - Aluminium	1	$ 2,80
40	Sheet Metal Saw Cut	LVDT sensor tabs cutting	$ 0,20	cm	115	Material - Aluminium	1	$ 23,00
50	Sheet metal bends	LVDT sensor tabs bending	$ 0,25	bend	25			$ 6,25
60	Drilled holes < 25.4 mm dia.	LVDT sensors tabs hole drilling	$ 0,35	hole	10	Material - Aluminium	1	$ 3,50
70	Sheet Metal Saw Cut	LVDT sensor second tabs cutting	$ 0,20	cm	73	Material - Aluminium	1	$ 14,60
80	Sheet metal bends	LVDT sensor second tabs bending	$ 0,25	bend	10			$ 2,50
90	Drilled holes < 25.4 mm dia.	LVDT sensors second tabs hole drilling	$ 0,35	hole	10	Material - Aluminium	1	$ 3,50
							Sub Total	**$ 69,35**

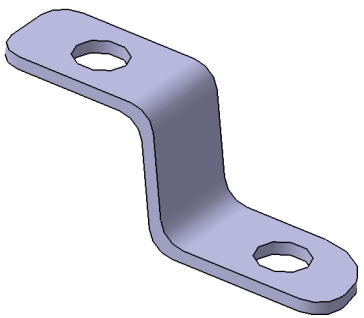

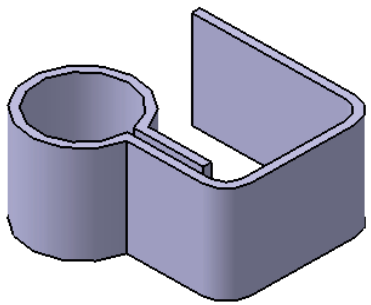

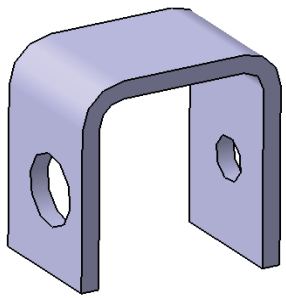

University	Ecole Centrale de Lyon	**Car #**	81	**Asm Cost**	$ 60,33
System	Electrical			**Qty**	0
Assembly	Shifting system wiring harness				
P/N Base	EL A0005			**Extended Cost**	$ 60,33
Suffix	AA				
Details	Controls gearbox from dashboard				

ItemOrder	Part	Part Cost	Quantity	Sub Total
10	Paddles connector mount	$ 1,92	1	$ 1,92
			Sub Total	**$ 1,92**

ItemOrder	Material	Use	UnitCost	Size1	Unit1	Size2	Unit2	Area Name	Area	Length	Density	Quantity	Sub Total
10	Wire, Control		$ 1,00	13,4	m							1	$ 13,40
20	Connector, Aerospace Quality	Paddles connector	$ 1,00	4	pin							1	$ 4,00
40	Connector, Computer Type		$ 1,00	6	pin							1	$ 6,00
50	Connector, Computer Type		$ 1,00	8	pin							1	$ 8,00
60	Connector, Single Wire	Connectors for buttons	$ 0,05	1	wire							4	$ 0,20
70	Heat Shrink Tubing		$ 0,50	0,5	m							1	$ 0,25
												Sub Total	**$ 31,85**

ItemOrder	Process	Use	UnitCost	Unit	Quantity	Multiplier	Mult. Val.	Sub Total
10	Cut wire		$ 0,08	unit	20			$ 1,60
20	Strip wire		$ 0,08	unit	19			$ 1,52
30	Attach Wire, Solder wire, not bent		$ 0,52	unit	12			$ 6,24
40	Crimp wire		$ 0,17	unit	6			$ 1,02
50	Connector assembley, crimp		$ 0,36	contact	6			$ 2,16
60	Connector assembley, solder		$ 0,24	contact	17			$ 4,08
70	Shrink tube		$ 0,15	cm	50			$ 7,50
80	Wire dressing		$ 1,00	m	2,2			$ 2,20
90	Connector Install, Circular, Screw Thread		$ 0,24	unit	1			$ 0,24
100	Connector Install, Square, Friction		$ 0,14	unit	2			$ 0,28
							Sub Total	**$ 26,56**

University	Ecole Centrale de Lyon	**Car #**	81	**Part Cost**	$ 1,92
System	Electrical			**Qty**	0
Assembly	Assembly				
Part	Paddles connector mount			**Extended Cost**	$ 1,92
P/N Base	EL 05001				
Suffix	AA				
Details					

ItemOrder	Material	Use	UnitCost	Size1	Unit1	Size2	Unit2	Area Name	Area	Length	Density	Quantity	Sub Total
10	Aluminium, normal	Material for part	$ 4,20	50	mm	31	mm	rectangular	1,55E-03	0,002	2 710	1	$ 0,04
												Sub Total	**$ 0,04**

ItemOrder	Process	Use	UnitCost	Unit	Quantity	Multiplier	Mult. Val.	Sub Total
10	Machining Setup, Install and remove	Setup for laser cutting	$ 1,30	unit	1			$ 1,30
20	Laser Cut		$ 0,01	cm	20	Material - Steel	3	$ 0,59
							Sub Total	**$ 1,89**

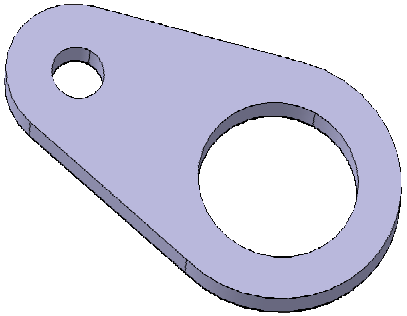

University	Ecole Centrale de Lyon	**Car #**	81	**Asm Cost**	$ 48,18
System	Electrical			**Qty**	0
Assembly	Gearbox actuator wiring harness				
P/N Base	EL A0006			**Extended Cost**	$ 48,18
Suffix	AA				
Details	Powers and controls gearbox actuator				

ItemOrder	Material	Use	UnitCost	Size1	Unit1	Size2	Unit2	Area Name	Area	Length	Density	Quantity	Sub Total
10	Wire, Control		$ 1,00	4,1	m							1,00	$ 4,10
20	Wire, Power		$ 3,00	1,4	m							1,00	$ 4,20
30	Connector, Aerospace Quality		$ 1,00	12	pin							1,00	$ 12,00
40	Heat Shrink Tubing		$ 0,50	0,4	m							1,00	$ 0,20
												Sub Total	**$ 20,50**

ItemOrder	Process	Use	UnitCost	Unit	Quantity	Multiplier	Mult. Val.	Sub Total
10	Cut wire		$ 0,08	unit	18			$ 1,44
20	Strip wire		$ 0,08	unit	52			$ 4,16
30	Attach Wire, Solder wire, not bent		$ 0,52	unit	11			$ 5,72
40	Crimp wire		$ 0,17	unit	24			$ 4,08
50	Connector assembley, crimp		$ 0,36	contact	24			$ 8,64
70	Shrink tube		$ 0,15	cm	20			$ 3,00
80	Wire dressing		$ 1,00	m	0,4			$ 0,40
90	Connector Install, Circular, Screw Thread		$ 0,24	unit	1			$ 0,24
							Sub Total	**$ 27,68**

ÉCOLE CENTRALE LYON

MISCELLANEOUS , FIT & FINISH

EPSA TEAM

CAR # 81

Ecurie Piston Sport Auto

University	Ecole Cenrale de Lyon	**Car #**	81	**Asm Cost**	$ 138.09
System	Miscellaneous, Fit & Finish			**Qty**	1
Assembly	Firewall	**FileLink1**			
P/N Base	MS A0001	**FileLink2**		**Extended Cost**	$ 138.09
Suffix	AA	**FileLink3**			
Details	Protects the driver from dangers				

ItemOrder	Part	Part Cost	Quantity	Sub Total
10	Firewall Main Plate	$ 16.91	1	$ 16.91
20	Firewall Bottom Side Plate	$ 4.93	2	$ 9.85
30	Firewall Top Side Plate	$ 5.73	2	$ 11.47
40	Firewall Hole Plate	$ 6.55	1	$ 6.55
50	Firewall Top Plate	$ 7.62	1	$ 7.62
60	Firewall Bottom Radiator Plate	$ 3.56	1	$ 3.56
70	Firewall Top Radiator Plate	$ 10.30	1	$ 10.30
80	Firewall Tab	$ 1.76	26	$ 45.67
			Sub Total	**$ 111.94**

ItemOrder	Material	Use	UnitCost	Size1	Unit1	Size2	Unit2	Area Name	Area	Length	Density	Quantity	Sub Total
10	Paint	Steel tabs painting	$ 10.00									0.01	$ 0.05
												Sub Total	**$ 0.05**

ItemOrder	Process	Use	UnitCost	Unit	Quantity	Multiplier	Mult. Val.	Sub Total
10	Weld	Tabs welding on frame	$ 0.15	cm	2			$ 0.30
20	Aerosol apply	Paint tabs	$ 5.25	m^2	0.005			$ 0.03
30	Assemble, 3 kg, Interference	Main plate installation	$ 0.56	unit	1	Assemble - Length > 0.5m	1.25	$ 0.70
40	Assemble, 1 kg, Line-on-Line	Top radiator plate installation	$ 0.13	unit	1			$ 0.13
50	Riveting	Main plate riveting to frame & Top radiator	$ 0.25	unit	6	Assemble - Length > 0.5m	1.25	$ 1.88
40	Assemble, 1 kg, Line-on-Line	Bottom radiator plate installation	$ 0.13	unit	1			$ 0.13
50	Riveting	Bottom radiator plate riveting to frame	$ 0.25	unit	3			$ 0.75
60	Assemble, 1 kg, Loose	Side plates installation	$ 0.06	unit	4			$ 0.25
70	Riveting	Side plates riveting to frame & to main plat	$ 0.25	unit	20			$ 5.00
80	Assemble, 1 kg, Line-on-Line	Top plate installation	$ 0.13	unit	1			$ 0.13
90	Riveting	Top plate riveting to frame & to main plate	$ 0.25	unit	6			$ 1.50
100	Assemble, 1 kg, Loose	Hole plate installation	$ 0.06	unit	1			$ 0.06
110	Riveting	Hole plate riveting to main plate	$ 0.25	unit	6			$ 1.50
130	Tape	Firewall sealing with aluminium tape	$ 0.80	m	5			$ 4.00
							Sub Total	**$ 16.35**

ItemOrder	Fastener	Use	UnitCost	Size1	Unit1	Size2	Unit2	Quantity	Sub Total
10	Rivet, Pop	Attach firewall to frame and between plate	$ 0.03	3.8	mm			36	$ 1.08
								Sub Total	**$ 1.08**

ItemOrder	Tooling	Use	UnitCost	Unit	Quantity	PVF	FractionIncluded	Sub Total
10	Welds - Welding Fixture	Tabs welding on frame	$ 500.00	point	52	3000	1	$ 8.67
							Sub Total	**$ 8.67**

University	Ecole Centrale de Lyon			**Car #**	81	**Part Cost**	$ 16.91
System	Miscellaneous, Fit & Finish	**FileLink1**				**Qty**	1
Assembly	Firewall	**FileLink2**		**FileLink1**			
Part	Firewall Main Plate	**FileLink3**		**FileLink2**		**Extended Cost**	$ 16.91
P/N Base	MS 01001			**FileLink3**			
Suffix	AA						
Details	Central plate of the firewall						

ItemOrder	Material	Use	UnitCost	Size1	Unit1	Size2	Unit2	Area Name	Area	Length	Density	Quantity	Sub Total
10	Aluminium, Normal	Material for part	$ 4.20	736	mm	727	mm	Rectangular Area	5.35E-01	0.001	2 700	1.00	$ 6.07
												Sub Total	**$ 6.07**

ItemOrder	Process	Use	UnitCost	Unit	Quantity	Multiplier	Mult. Val.	Sub Total
10	Machining Setup, Install and remove	Setup for laser cutting	$ 1.30	unit	1			$ 1.30
20	Laser Cut	Cutout shape	$ 0.01	cm	229	Material - Aluminum	1	$ 2.29
30	Sheet metal bends	Central bend	$ 0.25	bend	1			$ 0.25
40	Drilled holes < 25.4 mm dia.	Attachment holes	$ 0.35	hole	20			$ 7.00
							Sub Total	**$ 10.84**

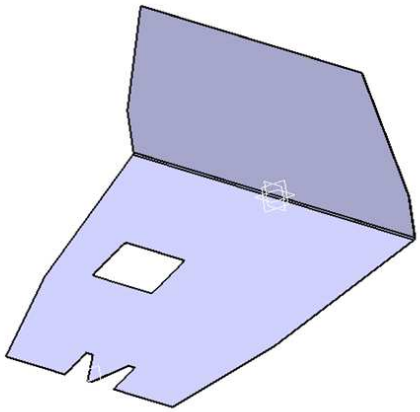

Auxiliary view A
Scale: 1:8

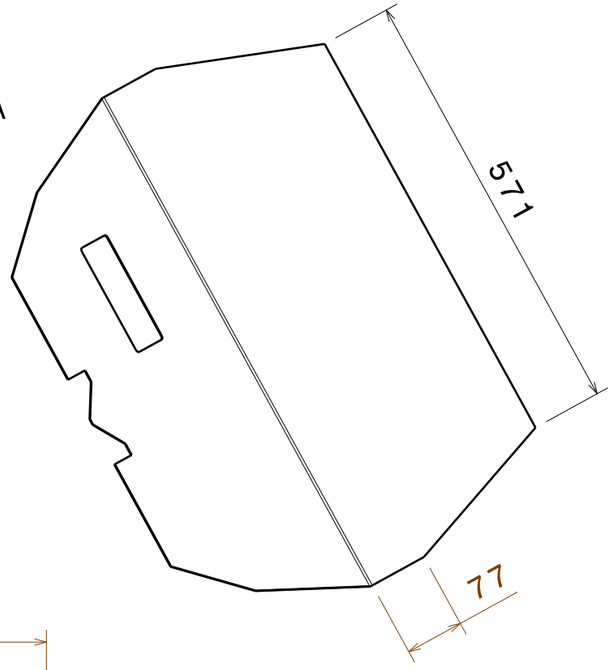

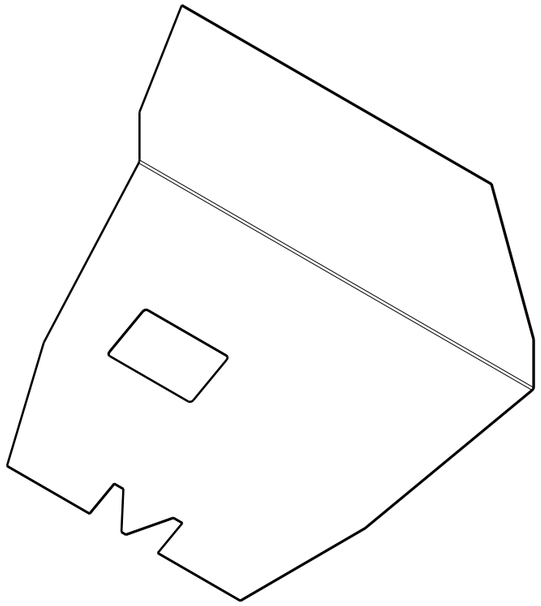

Isometric view
Scale: 1:8

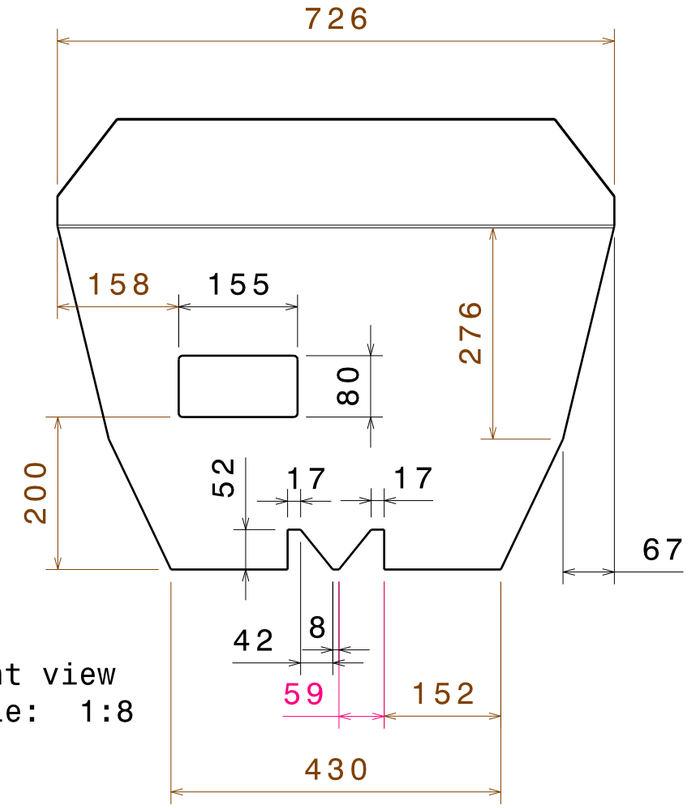

Front view
Scale: 1:8

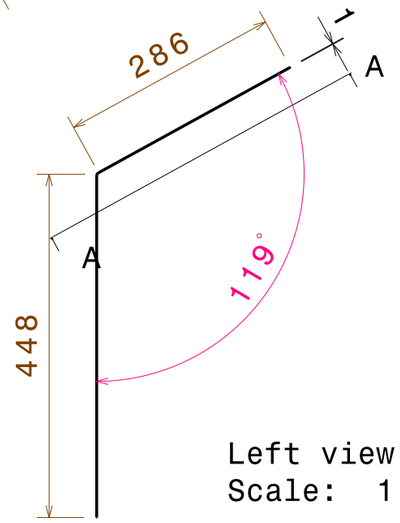

Left view
Scale: 1:8

Tolérances générales
ISO 2768 mk

Taille A3		Ecurie Piston Sport Auto
Dessiné par Andres Poveda	Date 04/02/2015	Désignation Paroi Pare-Feu Centre
Coordonnées Tel : 06 71 19 74 32 andres.poveda@ecl13.ec-lyon.fr		Quantité 1 / Matériau Aluminium au choix / Version 1.0
Plan vérifié par SCU		Echelle 1:8 / Numéro du plan 15-M-048 / Feuille 1/1

306

University	Ecole Centrale de Lyon			**Car #**	81	**Part Cost**	$ 4.93
System	Miscellaneous, Fit & Finish	**FileLink1**				**Qty**	2
Assembly	Firewall	**FileLink2**		**FileLink1**			
Part	Firewall Bottom Side Plate	**FileLink3**		**FileLink2**		**Extended Cost**	$ 9.85
P/N Base	MS 01002			**FileLink3**			
Suffix	AA						
Details	Side plates of the firewall						

ItemOrder	Material	Use	UnitCost	Size1	Unit1	Size2	Unit2	Area Name	Area	Length	Density	Quantity	Sub Total
10	Aluminium, Normal	Material for part	$ 4.20	441	mm	146	mm	Rectangular Area	6.44E-02	0.001	2 700	1.00	$ 0.73
												Sub Total	**$ 0.73**

ItemOrder	Process	Use	UnitCost	Unit	Quantity	Multiplier	Mult. Val.	Sub Total
10	Machining Setup, Install and remove	Setup for laser cutting	$ 1.30	unit	1			$ 1.30
20	Laser Cut	Cutout shape	$ 0.01	cm	90	Material - Aluminum	1	$ 0.90
30	Sheet metal bends	Give shape	$ 0.25	bend	1			$ 0.25
40	Drilled holes < 25.4 mm dia.	Attachment holes	$ 0.35	hole	5			$ 1.75
							Sub Total	**$ 4.20**

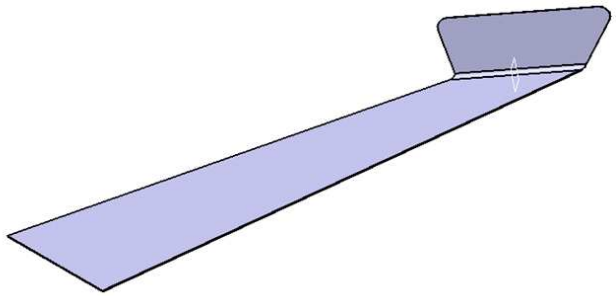

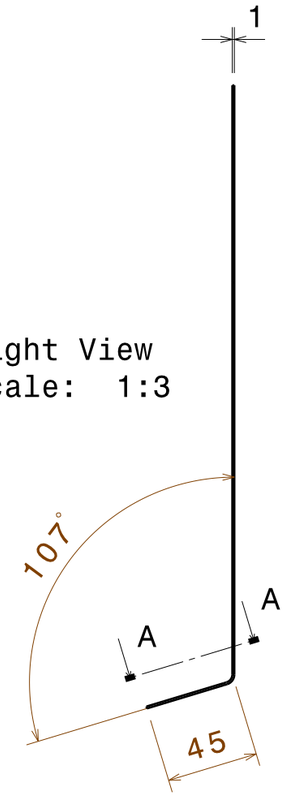

Right View
Scale: 1:3

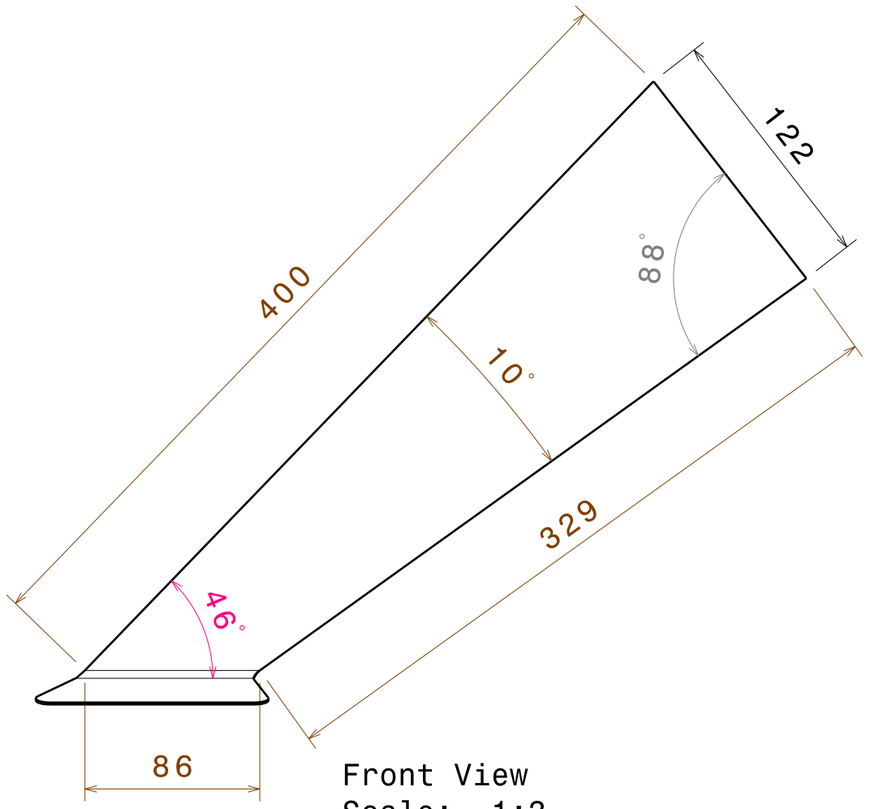

Front View
Scale: 1:3

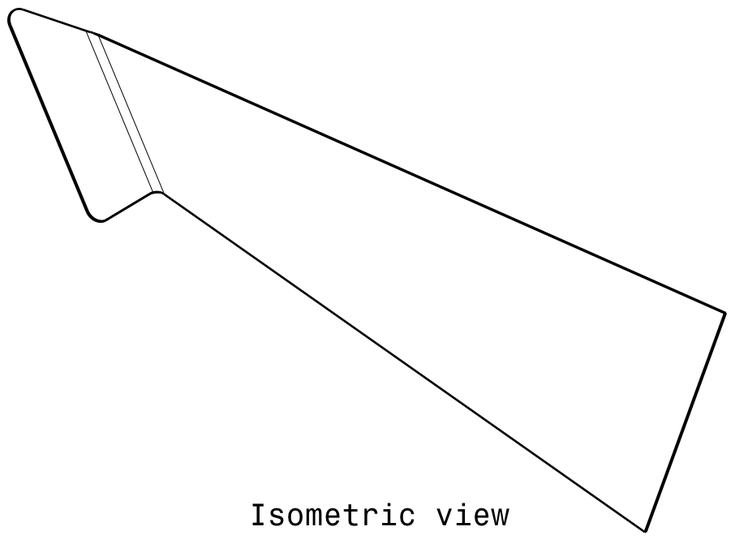

Isometric view
Scale: 1:3

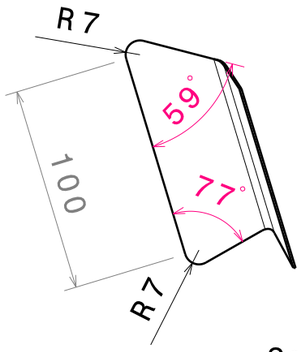

Section view A-A
Scale: 1:3

Tolérances générales
ISO 2768 mk

Taille A3		Ecurie Piston Sport Auto
Dessiné par Andres Poveda	Date 04/02/2015	Désignation Paroi Pare-feu coté bas
Coordonnées Tel : 06 71 19 74 32 andres.poveda@ecl13.ec-lyon.fr		Quantité 1+1 / Matériau Aluminium au choix / Version 1.0
Plan vérifié par SCU		Echelle 1:3 / Numéro du plan 15-M-050 / Feuille 1/1

University	Ecole Centrale de Lyon			**Car #**	81	**Part Cost**	$ 5.73
System	Miscellaneous, Fit & Finish	**FileLink1**				**Qty**	2
Assembly	Firewall	**FileLink2**		**FileLink1**			
Part	Firewall Top Side Plate	**FileLink3**		**FileLink2**		**Extended Cost**	$ 11.47
P/N Base	MS 01003			**FileLink3**			
Suffix	AA						
Details	Side plates of the firewall						

ItemOrder	Material	Use	UnitCost	Size1	Unit1	Size2	Unit2	Area Name	Area	Length	Density	Quantity	Sub Total
10	Aluminium, Normal	Material for part	$ 4.20	144	mm	664	mm	Rectangular Area	9.56E-02	0.001	2 700	1.00	$ 1.08
												Sub Total	**$ 1.08**

ItemOrder	Process	Use	UnitCost	Unit	Quantity	Multiplier	Mult. Val.	Sub Total
10	Machining Setup, Install and remove	Setup for laser cutting	$ 1.30	unit	1			$ 1.30
20	Laser Cut	Cutout shape	$ 0.01	cm	135	Material - Aluminum	1	$ 1.35
30	Sheet metal bends	Give shape	$ 0.25	bend	1			$ 0.25
40	Drilled holes < 25.4 mm dia.	Attachment holes	$ 0.35	hole	5			$ 1.75
							Sub Total	**$ 4.65**

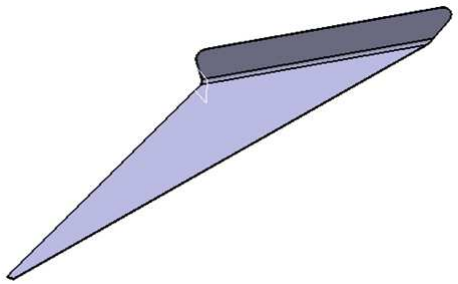

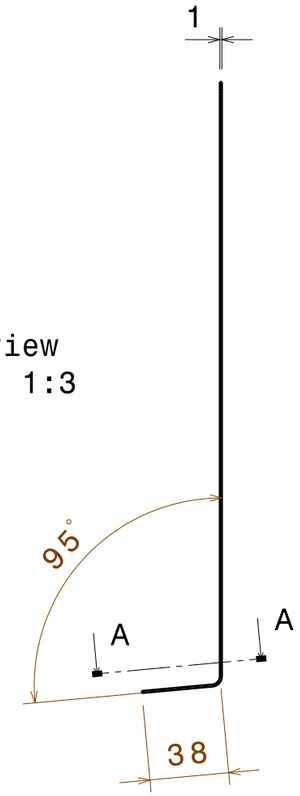

Front view
Scale: 1:3

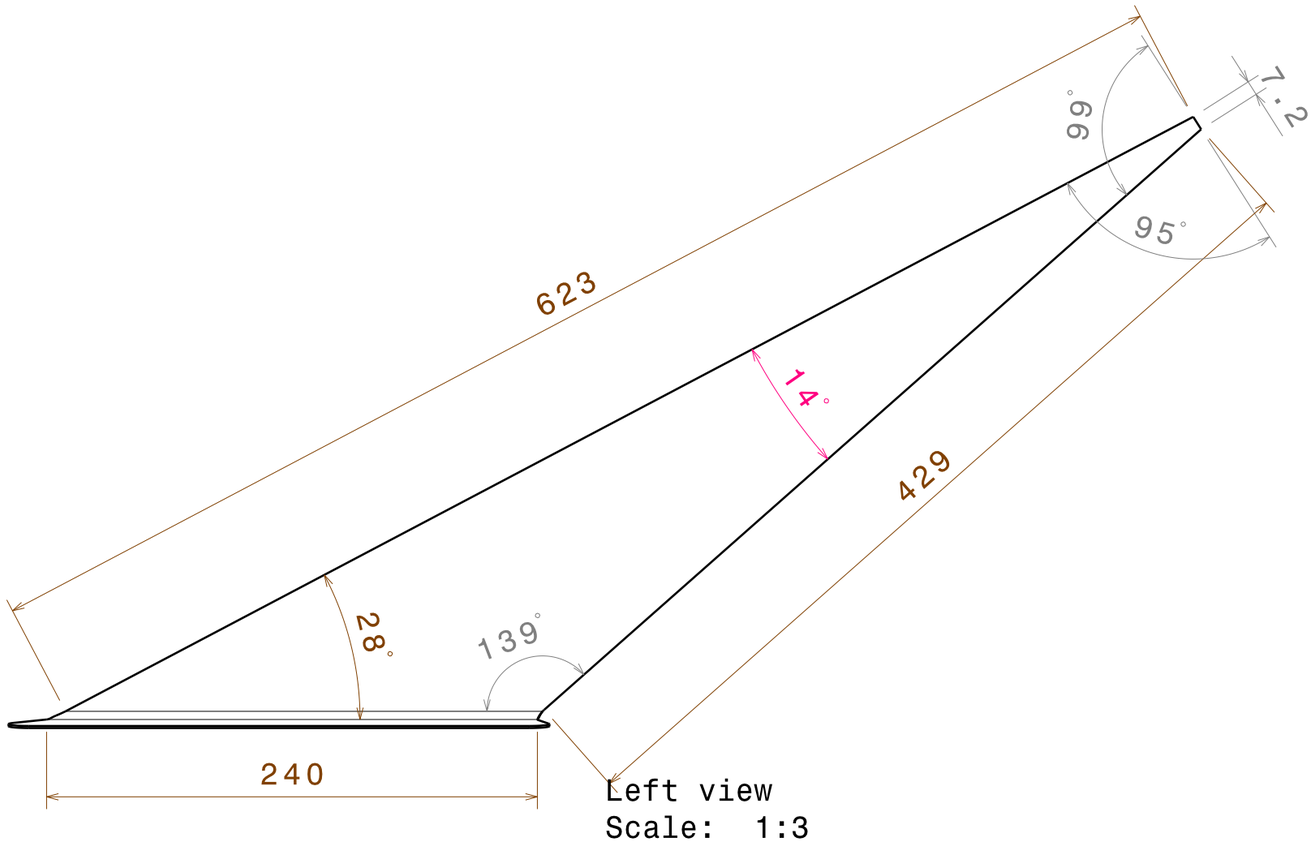

Left view
Scale: 1:3

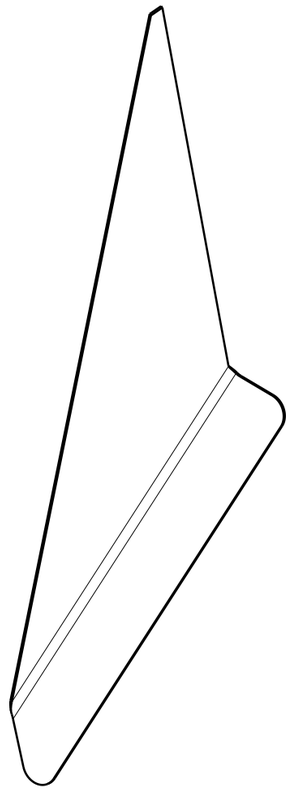

Isometric view
Scale: 1:3

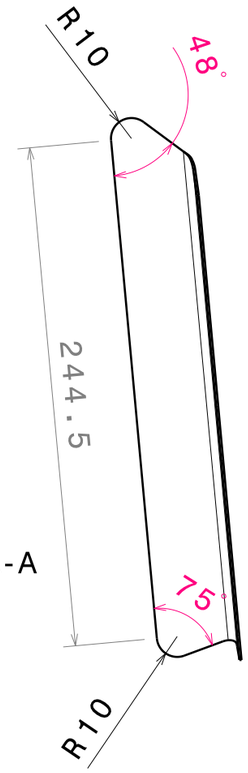

Section view A-A
Scale: 1:3

Tolérances générales
ISO 2768 mk

Taille A3		Ecurie Piston Sport Auto
Dessiné par Andres Poveda	Date 04/02/2015	Désignation Paroi Pare-feu Cote Haut
Coordonnées Tel : 06 71 19 74 32 andres.poveda@ecl13.ec-lyon.fr		Quantité 1+1 / Matériau Aluminium au choix / Version 1.0
Plan vérifié par SCU		Echelle 1:3 / Numéro du plan 15-M-049 / Feuille 1/1

310

University	Ecole Centrale de Lyon			**Car #**	81	**Part Cost**	$ 6.55
System	Miscellaneous, Fit & Finish	**FileLink1**				**Qty**	1
Assembly	Firewall	**FileLink2**		**FileLink1**			
Part	Firewall Hole Plate	**FileLink3**		**FileLink2**		**Extended Cost**	$ 6.55
P/N Base	MS 01004			**FileLink3**			
Suffix	AA						
Details	Piece covering the hole made to gain space						

ItemOrder	Material	Use	UnitCost	Size1	Unit1	Size2	Unit2	Area Name	Area	Length	Density	Quantity	Sub Total
10	Aluminium, Normal	Material for part	$ 4.20	139	mm	244	mm	Rectangular Area	3.39E-02	0.001	2 700	1.00	$ 0.38
												Sub Total	**$ 0.38**

ItemOrder	Process	Use	UnitCost	Unit	Quantity	Multiplier	Mult. Val.	Sub Total
10	Machining Setup, Install and remove	Setup for laser cutting	$ 1.30	unit	1			$ 1.30
20	Laser Cut	Cutout shape	$ 0.01	cm	51	Material - Aluminum	1	$ 0.51
30	Sheet metal bends	Give shape	$ 0.25	bend	9			$ 2.25
40	Drilled holes < 25.4 mm dia.	Attachment holes	$ 0.35	hole	6			$ 2.10
							Sub Total	**$ 6.16**

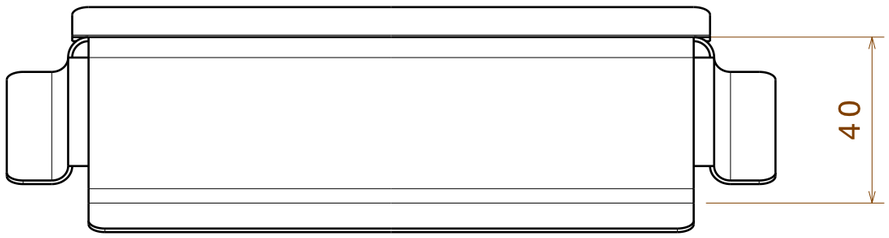

Front view
Scale: 2:3

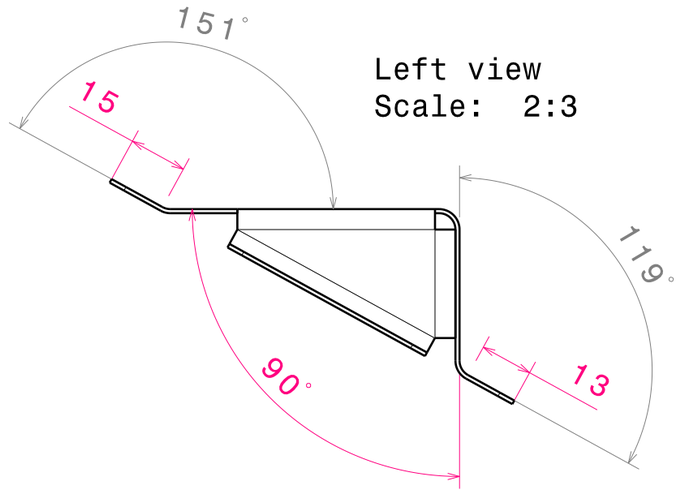

Left view
Scale: 2:3

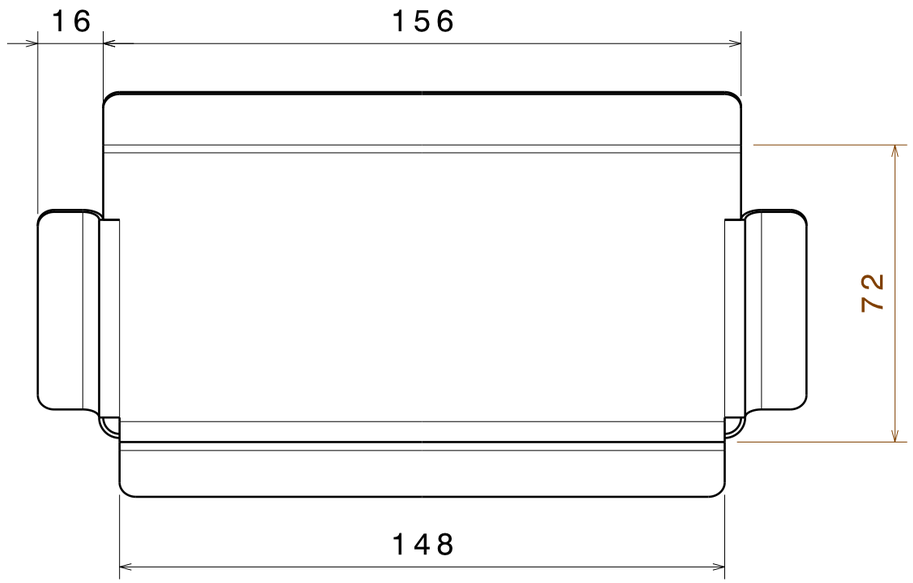

Top view
Scale: 2:3

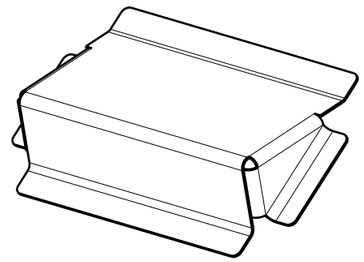

Isometric view
Scale: 1:3

Languettes pliées à 90°

Tolérances générales
ISO 2768 mk

Taille A3		Ecurie Piston Sport Auto
Dessiné par Andres Poveda	Date 04/02/2015	Désignation Paroi Pare-feu Trou
Coordonnées Tel : 06 71 19 74 32 andres.poveda@ecl13.ec-lyon.fr		Quantité 1 / Matériau Aluminium au choix / Version 1.0
Plan vérifié par SCU		Echelle 2:3 / Numéro du plan 15-M-069 / Feuille 1/1

312

University	Ecole Centrale de Lyon			**Car #**	81	**Part Cost**	$ 7.62
System	Miscellaneous, Fit & Finish	**FileLink1**				**Qty**	1
Assembly	Firewall	**FileLink2**		**FileLink1**			
Part	Firewall Top Plate	**FileLink3**		**FileLink2**		**Extended Cost**	$ 7.62
P/N Base	MS 01005			**FileLink3**			
Suffix	AA						
Details	Plate behind the driver's back of the head						

ItemOrder	Material	Use	UnitCost	Size1	Unit1	Size2	Unit2	Area Name	Area	Length	Density	Quantity	Sub Total
10	Aluminium, Normal	Material for part	$ 4.20	518	mm	206	mm	Rectangular Area	0.106708	0.001	2 700	1.00	$ 1.21
												Sub Total	**$ 1.21**

ItemOrder	Process	Use	UnitCost	Unit	Quantity	Multiplier	Mult. Val.	Sub Total
10	Machining Setup, Install and remove	Setup for laser cutting	$ 1.30	unit	1			$ 1.30
20	Laser Cut	Cutout shape	$ 0.01	cm	151	Material - Aluminum	1	$ 1.51
30	Sheet metal bends	Give shape	$ 0.25	bend	6			$ 1.50
40	Drilled holes < 25.4 mm dia.	Attachment holes	$ 0.35	hole	6			$ 2.10
							Sub Total	**$ 6.41**

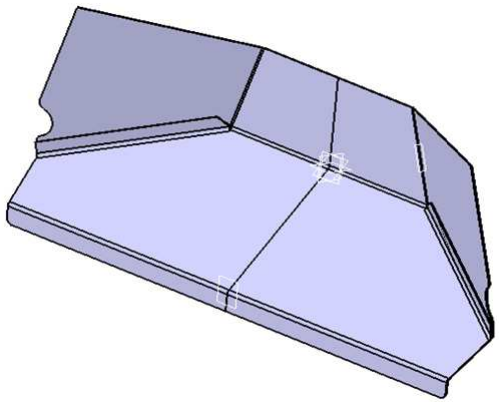

Front view
Scale: 1:3

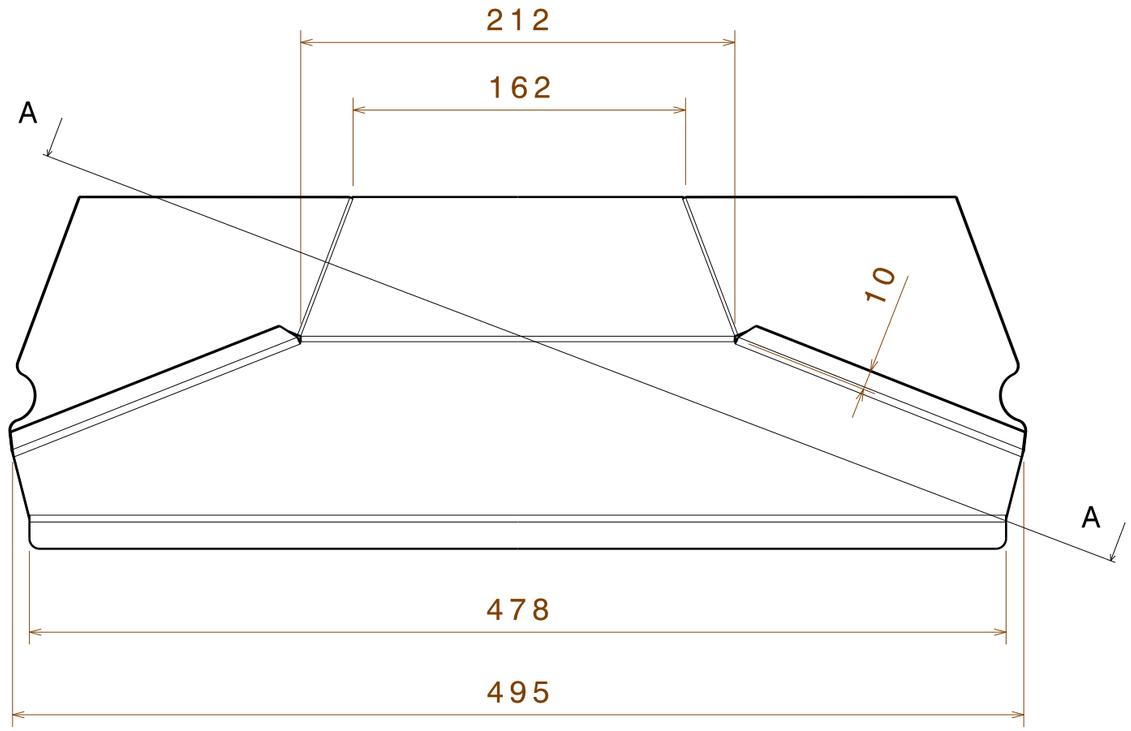

Left view
Scale: 1:3

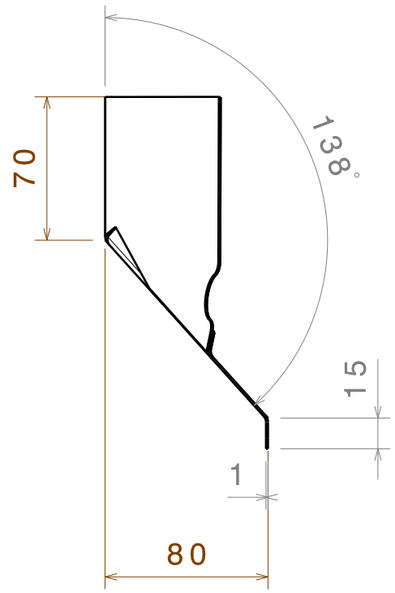

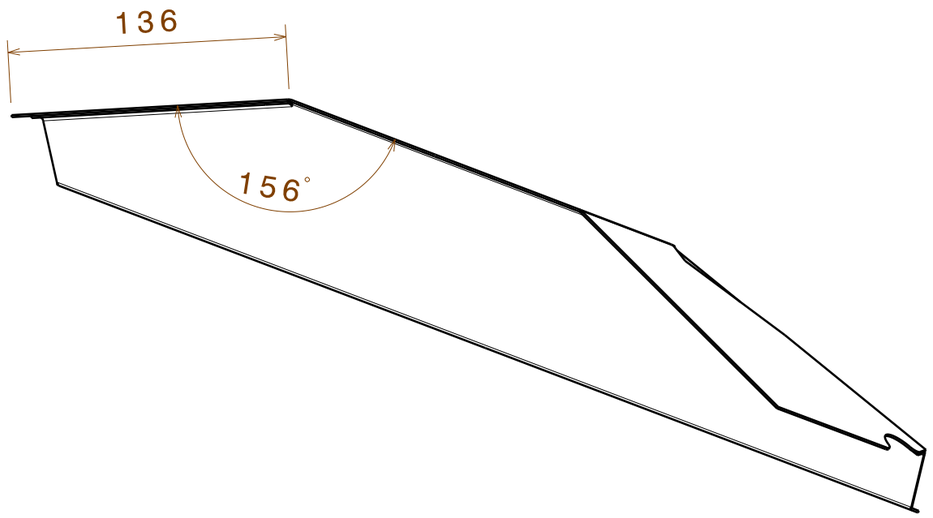

Auxiliary view A
Scale: 1:3

Tolérances générales
ISO 2768 mk

Taille A3		Ecurie Piston Sport Auto
Dessiné par Andres Poveda	Date 04/02/2015	Désignation Paroi Pare-feu Superieure
Coordonnées Tel : 06 71 19 74 32 andres.poveda@ecl13.ec-lyon.fr		Quantité 1 / Matériau Aluminium au choix / Version 1.0
Plan vérifié par SCU		Echelle 1:3 / Numéro du plan 15-M-047 / Feuille 1/1

University	Ecole Centrale de Lyon			**Car #**	81	**Part Cost**	$ 3.56
System	Miscellaneous, Fit & Finish	**FileLink1**				**Qty**	1
Assembly	Firewall	**FileLink2**		**FileLink1**			
Part	Firewall Bottom Radiator Plate	**FileLink3**		**FileLink2**		**Extended Cost**	$ 3.56
P/N Base	MS 01006			**FileLink3**			
Suffix	AA						
Details	Plate covering the driver from the radiator						

ItemOrder	Material	Use	UnitCost	Size1	Unit1	Size2	Unit2	Area Name	Area	Length	Density	Quantity	Sub Total
10	Aluminium, Normal	Material for part	$ 4.20	320	mm	141	mm	Rectangular Area	0.04512	0.001	2 700	1.00	$ 0.51
												Sub Total	**$ 0.51**

ItemOrder	Process	Use	UnitCost	Unit	Quantity	Multiplier	Mult. Val.	Sub Total
10	Machining Setup, Install and remove	Setup for laser cutting	$ 1.30	unit	1			$ 1.30
20	Laser Cut	Cutout shape	$ 0.01	cm	45	Material - Aluminum	1	$ 0.45
30	Sheet metal bends	Give shape	$ 0.25	bend	1			$ 0.25
40	Drilled holes < 25.4 mm dia.	Attachment holes	$ 0.35	hole	3			$ 1.05
							Sub Total	**$ 3.05**

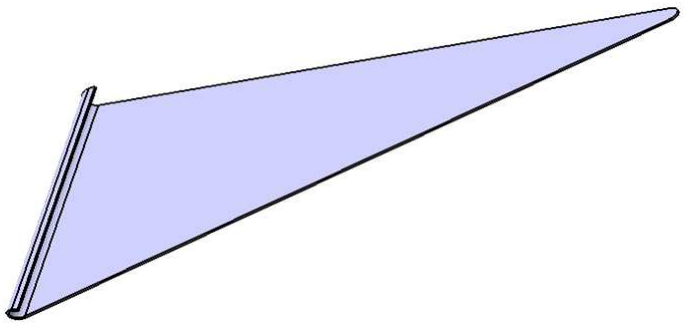

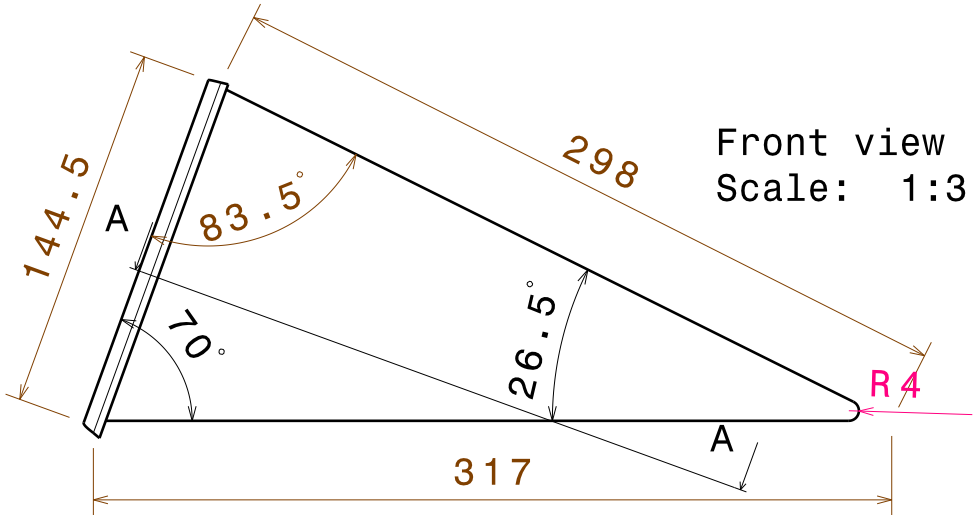

Front view
Scale: 1:3

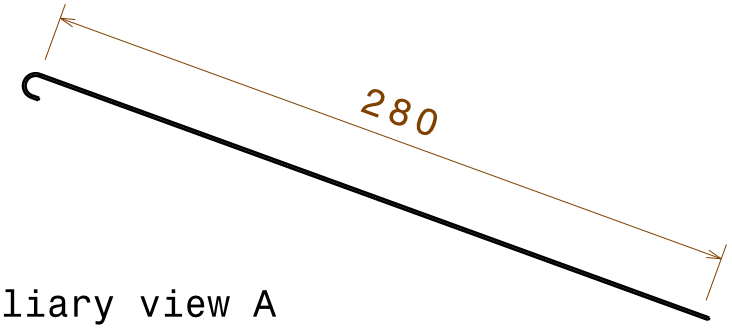

Auxiliary view A
Scale: 1:3

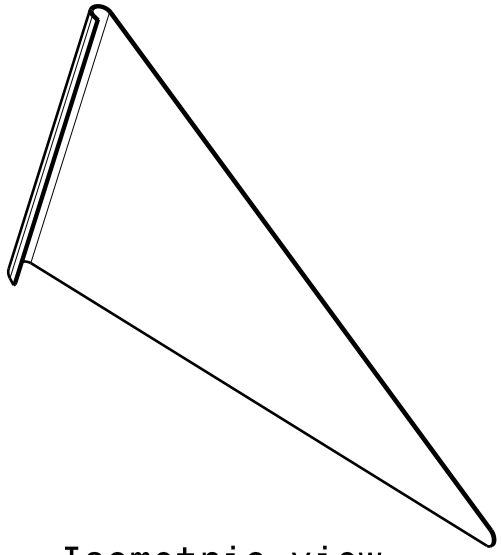

Isometric view
Scale: 1:3

Pli rond rayon quelconque

Epaisseuer : 1mm

Tolérances générales
ISO 2768 mK

Taille A4		Ecurie Piston Sport Auto
Dessiné par Andrés Poveda	Date 09/12/2014	Désignation: Paroi Pare-Feu Radiateur Inf
Coordonnées: Tel : 06 71 19 74 32, andres.poveda@ecl13.ec-lyon.fr		Quantité: 1 / Matériau: Aluminium au choix / Version: 1.0
Plan vérifié par PMR 316		Echelle 1:3 / Numéro du plan 15-M-068 / Feuille 1/1

University	Ecole Centrale de Lyon			**Car #**	81	**Part Cost**	$ 10.30
System	Miscellaneous, Fit & Finish	**FileLink1**				**Qty**	1
Assembly	Firewall	**FileLink2**		**FileLink1**			
Part	Firewall Top Radiator Plate	**FileLink3**		**FileLink2**		**Extended Cost**	$ 10.30
P/N Base	MS 01007			**FileLink3**			
Suffix	AA						
Details	Plate covering the driver from the radiator						

ItemOrder	Material	Use	UnitCost	Size1	Unit1	Size2	Unit2	Area Name	Area	Length	Density	Quantity	Sub Total
10	Aluminium, Normal	Material for part	$ 4.20	292	mm	251	mm	Rectangular Area	0.073292	0.001	2 700	1.00	$ 0.83
												Sub Total	**$ 0.83**

ItemOrder	Process	Use	UnitCost	Unit	Quantity	Multiplier	Mult. Val.	Sub Total
10	Machining Setup, Install and remove	Setup for laser cutting	$ 1.30	unit	1			$ 1.30
20	Laser Cut	Cutout shape	$ 0.01	cm	627	Material - Aluminum	1	$ 6.27
30	Sheet metal bends	Give shape	$ 0.25	bend	2			$ 0.50
40	Drilled holes < 25.4 mm dia.	Attachment holes	$ 0.35	hole	4			$ 1.40
							Sub Total	**$ 9.47**

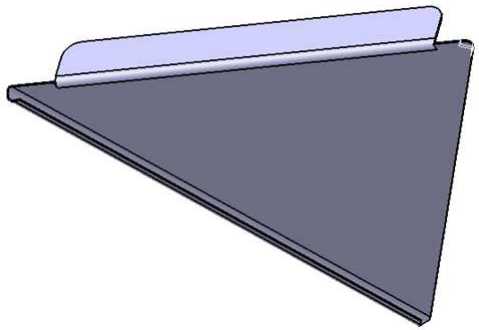

Front view
Scale: 1:6

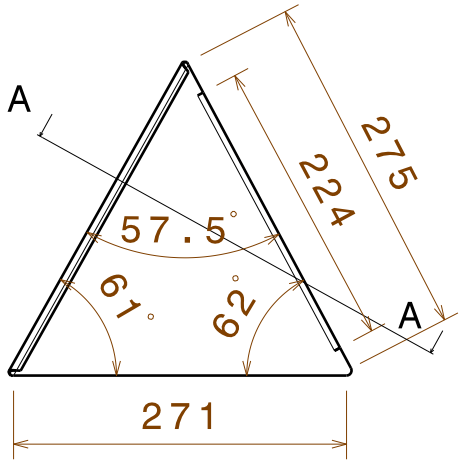

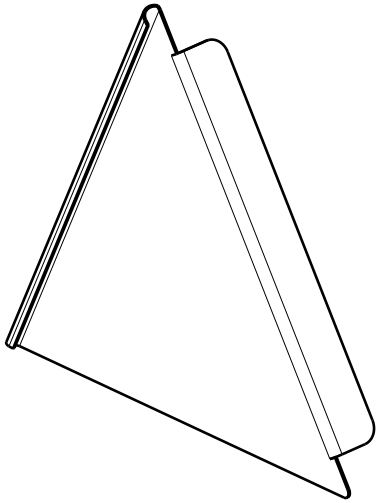

Isometric view
Scale: 1:4

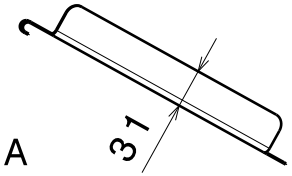

Auxiliary view A
Scale: 1:6

Pli rond rayon quelconque

Epaisseur : 1mm
Chafreins libres

Tolérances générales
ISO 2768 mK

Taille A4		Ecurie Piston Sport Auto
Dessiné par Andrés Poveda	Date 09/12/2014	Désignation Paroi Pare-Feu Radiateur Sup
Coordonnées Tel : 06 71 19 74 32 andres.poveda@ecl13.ec-lyon.fr		Quantité 1 / Matériau Aluminium au choix / Version 1.0
Plan vérifié par PMR 318		Echelle 1:6 / Numéro du plan 15-M-067 / Feuille 1/1

University	Ecole Centrale de Lyon			**Car #**	81	**Part Cost**	$ 1.76
System	Miscellaneous, Fit & Finish	**FileLink1**				**Qty**	26
Assembly	Firewall	**FileLink2**		**FileLink1**			
Part	Firewall Tab	**FileLink3**		**FileLink2**		**Extended Cost**	$ 45.67
P/N Base	MS 01008			**FileLink3**			
Suffix	AA						
Details	Attach the Firewall to the frame						

ItemOrder	Material	Use	UnitCost	Size1	Unit1	Size2	Unit2	Area Name	Area	Length	Density	Quantity	Sub Total
10	Steel, Mild	Material for part	$ 2.25	12	mm	21	mm	Rectangular Area	0.000252	0.002	7 800	1.00	$ 0.01
												Sub Total	**$ 0.01**

ItemOrder	Process	Use	UnitCost	Unit	Quantity	Multiplier	Mult. Val.	Sub Total
10	Machining Setup, Install and remove	Setup for laser cutting	$ 1.30	unit	1	4 parts cut from a single machine setup	0.25	$ 0.33
20	Laser Cut	Cutout shape & holes	$ 0.01	cm	48	Material - Steel	3	$ 1.43
							Sub Total	**$ 1.75**

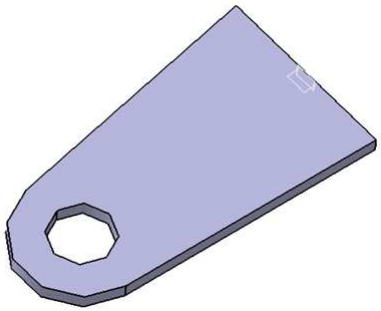

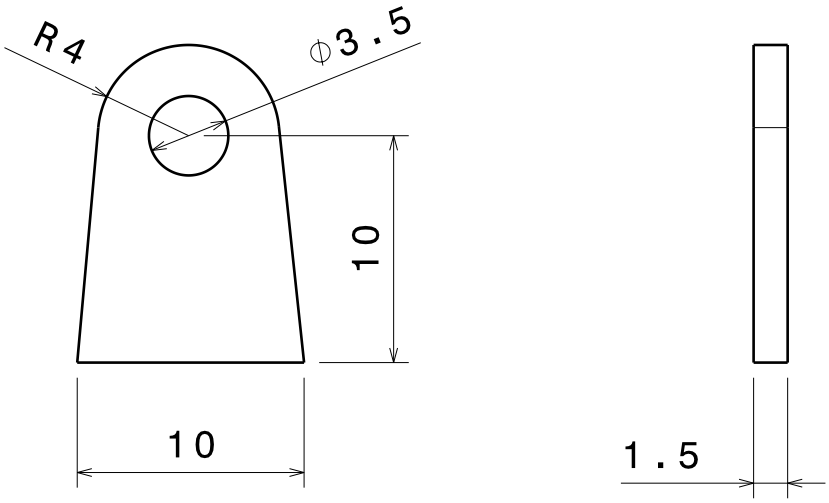

Front view
Scale: 3:1

Tolérances générales
ISO 2768mK

Taille A4		Ecurie Piston Sport Auto	
Dessiné par Andrés Poveda	Date 09/12/2014	Désignation Chape Paroi Pare-Feu	
Coordonnées Tel : 06 71 19 74 32 andres.poveda@ecl13.ec-lyon.fr		Quantité 18	Matériau Acier S235	Version 1.0
Plan vérifié par JGR		Echelle 3:1	Numéro du plan 15-M-051	Feuille 1/1

University	Ecole Cenrale de Lyon	**Car #**	81	**Asm Cost**	$ 60.09
System	Miscellaneous, Fit & Finish			**Qty**	1
Assembly	Harness	**FileLink1**			
P/N Base	MS A0002	**FileLink2**		**Extended Cost**	$ 60.09
Suffix	AA	**FileLink3**			
Details	Keep the driver in place in case of crash				

ItemOrder	Part	Part Cost	Quantity	Sub Total
10	Harness Tabs	$ 0.84	2	$ 1.67
			Sub Total	**$ 1.67**

ItemOrder	Material	Use	UnitCost	Size1	Unit1	Size2	Unit2	Area Name	Area	Length	Density	Quantity	Sub Total
10	Paint	Steel tabs painting	$ 10.00									0.01	$ 0.05
20	Harness, Driver	6-point safety harness	$ 45.00									1.00	$ 45.00
30	Roll Hoop Padding	Stopping horizontal movement of the harness tube mount	$ 0.05	5.50	cm							4.00	$ 1.10
												Sub Total	**$ 46.15**

ItemOrder	Process	Use	UnitCost	Unit	Quantity	Multiplier	Mult. Val.	Sub Total
10	Weld	Tabs welding on frame	$ 0.15	cm	8			$ 1.20
20	Aerosol apply	Paint tabs	$ 5.25	m^2	0.01			$ 0.05
30	Assemble, 1 kg, Loose	Assemble eyebolts on tabs	$ 0.06	unit	2			$ 0.13
40	Wrench <= 25.4 mm	Assemble eyebolts on tabs	$ 1.50	unit	2			$ 3.00
50	Reaction Tool <= 6.35 mm	Assemble eyebolts on tabs	$ 0.25	unit	2			$ 0.50
60	Assemble, 3 kg, Loose	Assemble harness on eyebolts & shoulder bar	$ 0.19	unit	1			$ 0.19
70	Brush Apply	Apply glue to padding	$ 0.02	cm^2	150			$ 3.00
80	Assemble, 1 kg, Line-on-Line	Attach padding to shoulder bar	$ 0.13	unit	4			$ 0.50
							Sub Total	**$ 8.57**

ItemOrder	Fastener	Use	UnitCost	Size1	Unit1	Size2	Unit2	Quantity	Sub Total
10	Eyebolt, Threaded, Steel	Attach harness to tabs	$ 1.43	10	mm			2	$ 2.87
20	Nut, Grade 8.8 (SAE 5)	Attach harness to tabs	$ 0.07	10	mm			2	$ 0.13
30	Washer, Grade 8.8 (SAE 5)	Attach harness to tabs	$ 0.01					4	$ 0.04
								Sub Total	**$ 3.04**

ItemOrder	Tooling	Use	UnitCost	Unit	Quantity	PVF	FractionIncluded	Sub Total
10	Welds - Welding Fixture	Tabs welding on frame	$ 500.00	point	4	3000	1	$ 0.67
							Sub Total	**$ 0.67**

University	Ecole Centrale de Lyon			**Car #**	81	**Part Cost**	$ 0.84
System	Miscellaneous, Fit & Finish	**FileLink1**				**Qty**	2
Assembly	Harness	**FileLink2**		**FileLink1**			
Part	Harness Tabs	**FileLink3**		**FileLink2**		**Extended Cost**	$ 1.67
P/N Base	MS 02001			**FileLink3**			
Suffix	AA						
Details	Attach harness to frame						

ItemOrder	Material	Use	UnitCost	Size1	Unit1	Size2	Unit2	Area Name	Area	Length	Density	Quantity	Sub Total
10	Steel, Mild	Material for part	$ 2.25	36.000	mm	36.000	mm	Rectangular Area	0.001296	0.004	7 800	1.00	$ 0.09
												Sub Total	**$ 0.09**

ItemOrder	Process	Use	UnitCost	Unit	Quantity	Multiplier	Mult. Val.	Sub Total
10	Machining Setup, Install and remove	Setup for laser cutting	$ 1.30	unit	1	2 parts cut from a single machine setup	0.5	$ 0.65
20	Laser Cut	Cutout shape	$ 0.01	cm	3	Material - Steel	3	$ 0.09
							Sub Total	**$ 0.74**

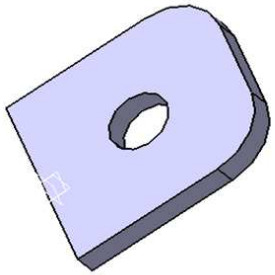

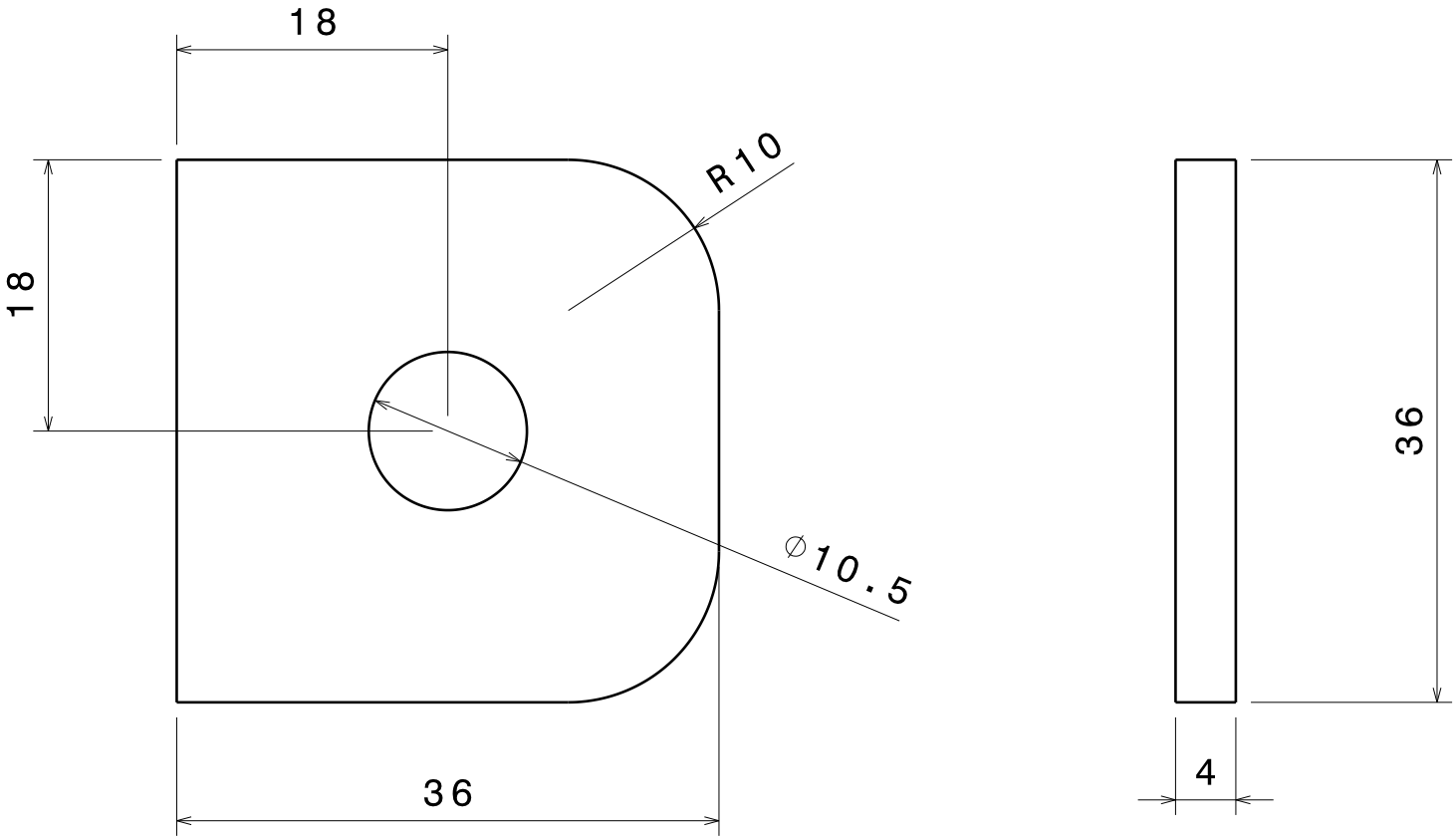

Tolérances générales
ISO 2768 mK

Taille A4		Ecurie Piston Sport Auto
Dessiné par Andrés Poveda	Date 09/12/2014	Désignation Chape Harnais Bas
Coordonnées Tel : 06 71 19 74 32 andres.poveda@ecl13.ec-lyon.fr		Quantité 2 / Matériau Acier S235 / Version 1.0
Plan vérifié par JGR 323		Echelle 2:1 / Numéro du plan 15-M-052 / Feuille 1/1

University	Ecole Cenrale de Lyon	**Car #**	81	**Asm Cost**	$ 55.15
System	Miscellaneous, Fit & Finish			**Qty**	1
Assembly	Headrest	**FileLink1**			
P/N Base	MS A0003	**FileLink2**		**Extended Cost**	$ 55.15
Suffix	AA	**FileLink3**			
Details	Stop the driver's head in case of frontal crash				

ItemOrder	Part	Part Cost	Quantity	Sub Total
10	Headrest Plate	$ 7.17	1	$ 7.17
20	Headrest Top Tabs	$ 0.94	2	$ 1.87
30	Headrest Bottom Tabs	$ 0.98	2	$ 1.96
			Sub Total	**$ 11.00**

ItemOrder	Material	Use	UnitCost	Size1	Unit1	Size2	Unit2	Area Name	Area	Length	Density	Quantity	Sub Total
10	Paint	Steel tabs painting	$ 10.00									0.01	$ 0.05
20	Head Rest Padding	Headrest foam padding	$ 0.01	546.00	cm^2	4.00	cm					2 184.00	$ 10.92
30	Fabric	Imitation leather fabric to cover headrest	$ 2.50	0.20	m^2							0.20	$ 0.50
40	Adhesive	Glue padding to plate	$ -									-	$ -
												Sub Total	**$ 11.47**

ItemOrder	Process	Use	UnitCost	Unit	Quantity	Multiplier	Mult. Val.	Sub Total
10	Assemble, 1 kg, Loose	Assemble tabs on plate	$ 0.06	unit	1			$ 0.06
20	Ratchet <= 25.4 mm	Bolt plate to tabs (loose)	$ 0.75	unit	4			$ 3.00
30	Weld	Tabs welding on frame	$ 0.15	cm	11.5			$ 1.73
40	Ratchet <= 25.4 mm	Dismount plate from tabs	$ 0.75	unit	4			$ 3.00
50	Aerosol apply	Paint tabs	$ 5.25	m^2	0.005			$ 0.03
60	Cut (scissors, knife)	Cut head rest padding into shape	$ 0.06	cm	90			$ 5.40
70	Cut (scissors, knife)	Cut fabric into shape	$ 0.06	cm	120			$ 7.20
80	Brush Apply	Apply glue on fabric	$ 0.02	cm^2	150			$ 3.00
90	Assemble, 1 kg, Line-on-Line	Assemble fabric on padding	$ 0.13	unit	1			$ 0.13
100	Brush Apply	Apply glue to padding + fabric	$ 0.02	cm^2	270			$ 5.40
110	Assemble, 1 kg, Loose	Assemble padding + fabric on plate	$ 0.06	unit	1			$ 0.06
120	Assemble, 1 kg, Line-on-Line	Assemble plate on tabs	$ 0.13	unit	1			$ 0.13
130	Ratchet <= 25.4 mm	Bolt plate to tabs	$ 0.75	unit	4			$ 3.00
140	Reaction Tool <= 6.35 mm	Bolt plate to tabs	$ 0.25	unit	4			$ 1.00
							Sub Total	**$ 30.06**

ItemOrder	Fastener	Use	UnitCost	Size1	Unit1	Size2	Unit2	Quantity	Sub Total
10	Bolt, Grade 10.9 (SAE 8)	Attach plate to tabs	$ 0.06	6	mm	20	mm	4	$ 0.23
20	Nut, Panel Retained	Attach plate to tabs	$ 0.22	6	mm			4	$ 0.90
30	Washer, Grade 10.9 (SAE 8)	Attach plate to tabs	$ 0.02	6	mm			8	$ 0.16
								Sub Total	**$ 1.29**

ItemOrder	Tooling	Use	UnitCost	Unit	Quantity	PVF	FractionIncluded	Sub Total
10	Welds - Welding Fixture	Tabs welding on frame	$ 500.00	point	8	3000	1	$ 1.33
							Sub Total	**$ 1.33**

University	Ecole Centrale de Lyon			**Car #**	81	**Part Cost**	$ 7.17
System	Miscellaneous, Fit & Finish	**FileLink1**				**Qty**	1
Assembly	Headrest	**FileLink2**		**FileLink1**			
Part	Headrest Plate	**FileLink3**		**FileLink2**		**Extended Cost**	$ 7.17
P/N Base	MS 03001			**FileLink3**			
Suffix	AA						
Details	Main plate						

ItemOrder	Material	Use	UnitCost	Size1	Unit1	Size2	Unit2	Area Name	Area	Length	Density	Quantity	Sub Total
10	Aluminium, Normal	Material for part	$ 4.20	410.000	mm	280.000	mm	Rectangular Area	0.1148	0.002	2 700	1.00	$ 2.60
												Sub Total	**$ 2.60**

ItemOrder	Process	Use	UnitCost	Unit	Quantity	Multiplier	Mult. Val.	Sub Total
10	Machining Setup, Install and remove	Setup for laser cutting	$ 1.30	unit	1			$ 1.30
20	Laser Cut	Cutout shape & holes	$ 0.01	cm	227	Material - Aluminum	1	$ 2.27
30	Sheet metal bends	Bend attachment prolongati	$ 0.25	bend	4			$ 1.00
							Sub Total	**$ 4.57**

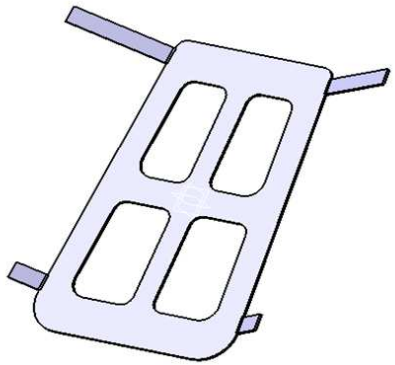

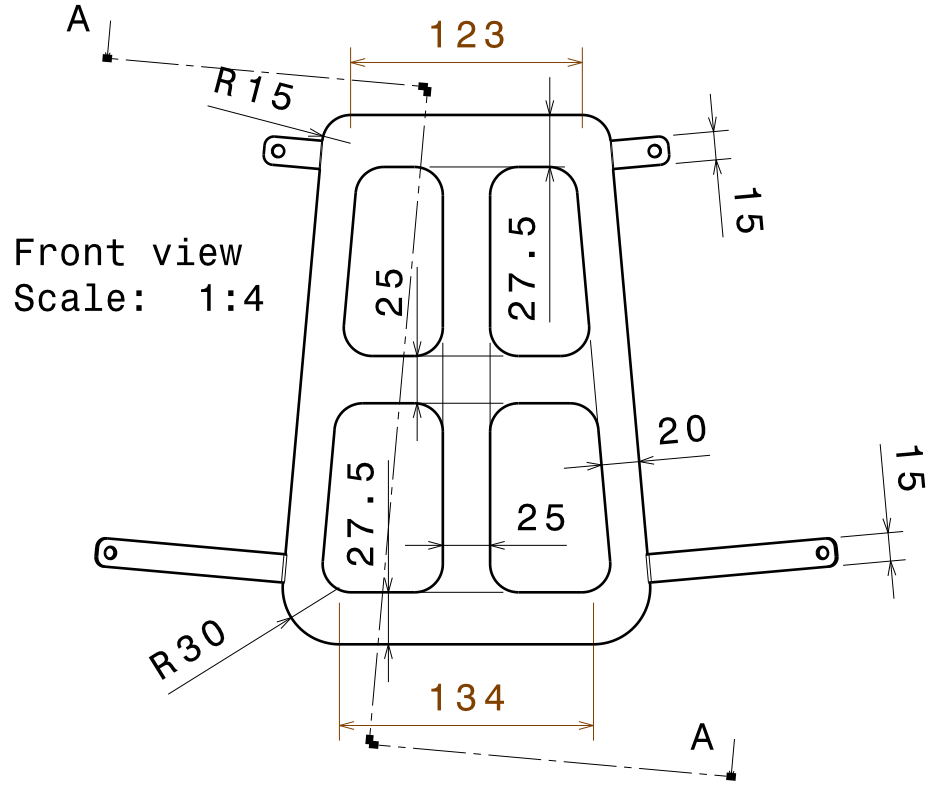

Front view
Scale: 1:4

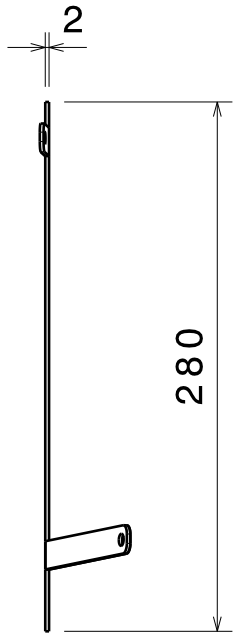

Left view
Scale: 1:4

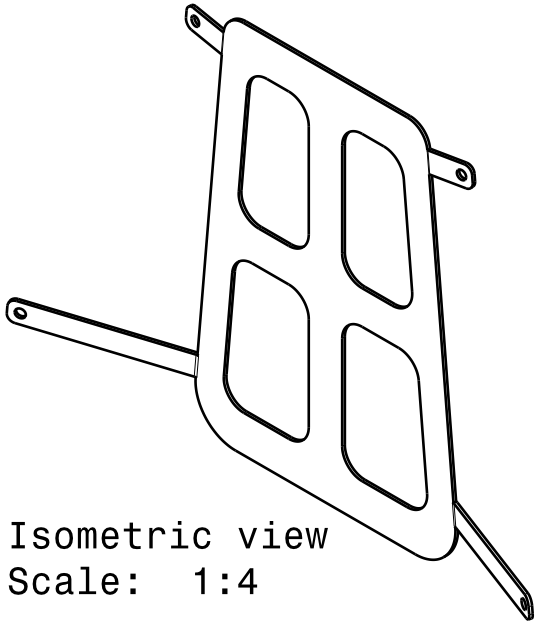

Isometric view
Scale: 1:4

Tolérances générales
ISO 2768 mK
Diametre trous: 6.4mm

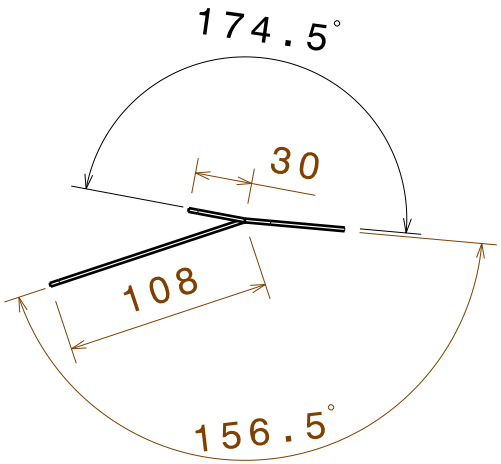

Section view A-A
Scale: 1:4

Taille A4		Ecurie Piston Sport Auto
Dessiné par Andrés Poveda	Date 09/12/2014	Désignation Plaque Appui-Tete
Coordonnées Tel : 06 71 19 74 32 andres.poveda@ecl13.ec-lyon.fr		Quantité 1 / Matériau Aluminium au choix / Version 0.1
Plan vérifié par LBD 326		Echelle 1:4 / Numéro du plan 15-M-044 / Feuille 1/1

University	Ecole Centrale de Lyon			**Car #**	81	**Part Cost**	$ 0.94
System	Miscellaneous, Fit & Finish	**FileLink1**				**Qty**	2
Assembly	Headrest	**FileLink2**		**FileLink1**			
Part	Headrest Top Tabs	**FileLink3**		**FileLink2**		**Extended Cost**	$ 1.87
P/N Base	MS 03002			**FileLink3**			
Suffix	AA						
Details	Attach the headrest to the frame						

ItemOrder	Material	Use	UnitCost	Size1	Unit1	Size2	Unit2	Area Name	Area	Length	Density	Quantity	Sub Total
10	Steel, Mild	Material for part	$ 2.25	35.000	mm	35.000	mm	Rectangular Area	0.001225	0.001	7 800	1.00	$ 0.02
												Sub Total	**$ 0.02**

ItemOrder	Process	Use	UnitCost	Unit	Quantity	Multiplier	Mult. Val.	Sub Total
10	Machining Setup, Install and remove	Setup for laser cutting	$ 1.30	unit	1	2 parts cut from a single machine setup	0.5	$ 0.65
20	Laser Cut	Cutout shape & holes	$ 0.01	cm	9	Material - Steel	3	$ 0.26
							Sub Total	**$ 0.91**

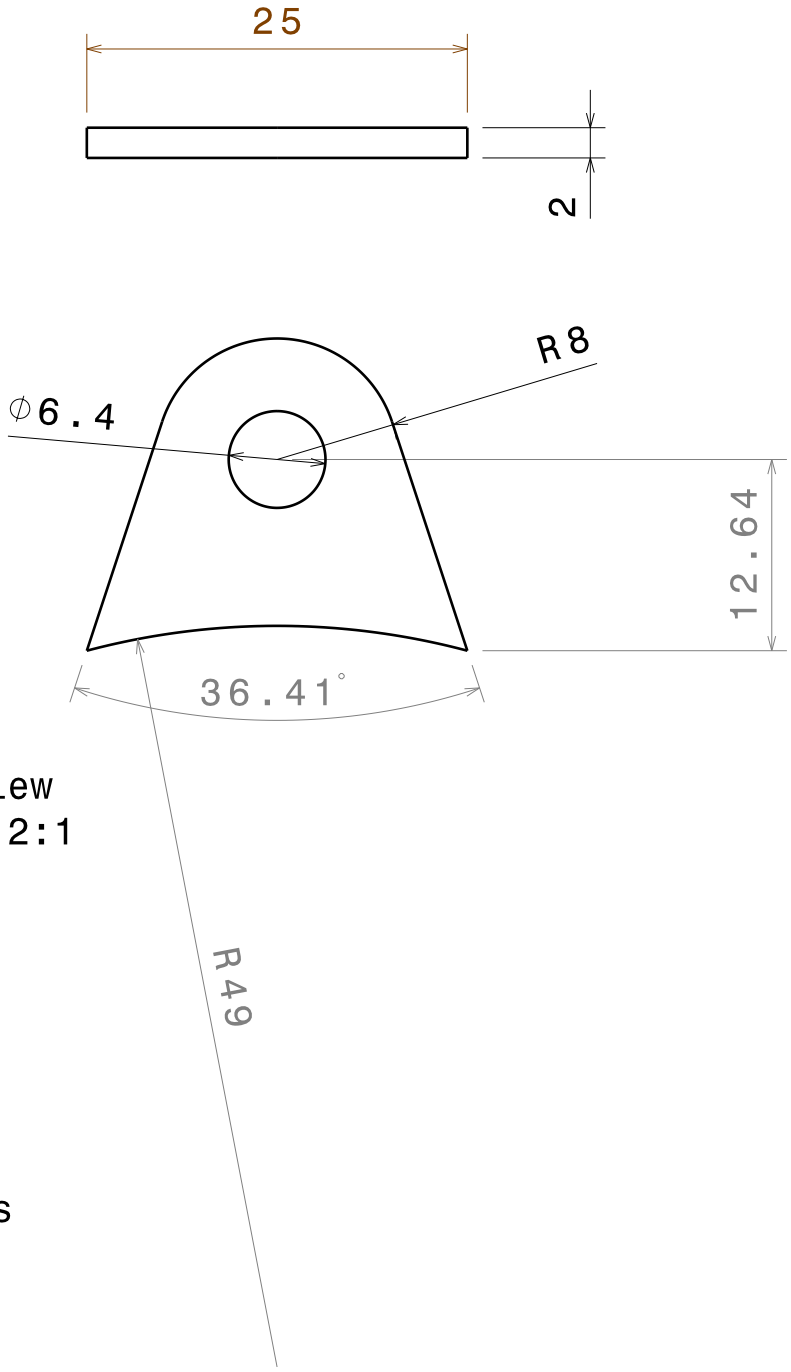

Front view
Scale: 2:1

Tolérances générales
ISO 2768mK

Taille A4		Ecurie Piston Sport Auto	
Dessiné par Andrés Poveda	Date 09/12/2014	Désignation Chape Superieure Appui-Tete	
Coordonnées Tel : 06 71 19 74 32 andres.poveda@ecl13.ec-lyon.fr		Quantité 2	Matériau Acier S235	Version 1.0
Plan vérifié par JGR		Echelle 2:1	Numéro du plan 15-M-046	Feuille 1/1

University	Ecole Centrale de Lyon			**Car #**	81	**Part Cost**	$ 0.98
System	Miscellaneous, Fit & Finish	**FileLink1**				**Qty**	2
Assembly	Headrest	**FileLink2**		**FileLink1**			
Part	Headrest Bottom Tabs	**FileLink3**		**FileLink2**		**Extended Cost**	$ 1.96
P/N Base	MS 03003			**FileLink3**			
Suffix	AA						
Details	Attach the headrest to the frame						

ItemOrder	Material	Use	UnitCost	Size1	Unit1	Size2	Unit2	Area Name	Area	Length	Density	Quantity	Sub Total
10	Steel, Mild	Material for part	$ 2.25	30.000	mm	30.000	mm	Rectangular A	0.0009	0.001	7 800	1.00	$ 0.02
												Sub Total	**$ 0.02**

ItemOrder	Process	Use	UnitCost	Unit	Quantity	Multiplier	Mult. Val.	Sub Total
10	Machining Setup, Install and remove	Setup for laser cutting	$ 1.30	unit	1	2 parts cut from a single machine setup	0.5	$ 0.65
20	Laser Cut	Cutout shape & holes	$ 0.01	cm	10	Material - Steel	3	$ 0.31
							Sub Total	**$ 0.96**

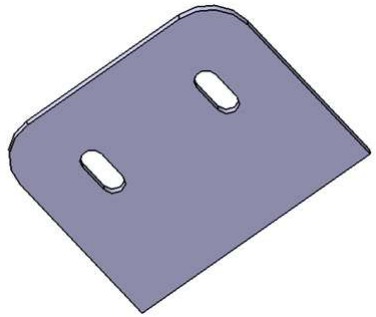

University	Ecole Cenrale de Lyon	**Car #**	81	**Asm Cost**	$ 9.25
System	Miscellaneous, Fit & Finish			**Qty**	1
Assembly	Safety	**FileLink1**			
P/N Base	MS A0004	**FileLink2**		**Extended Cost**	$ 9.25
Suffix	AA	**FileLink3**			
Details	Protect the driver's head in case of crash				

ItemOrder	Part	Part Cost	Quantity	Sub Total
10	Roll Bar Padding	$ 4.50	2	$ 9.00
			Sub Total	**$ 9.00**

ItemOrder	Process	Use	UnitCost	Unit	Quantity	Multiplier	Mult. Val.	Sub Total
10	Assemble, 1 kg, Line-on-Line	Attach padding to shoulder bar	$ 0.13	unit	2			$ 0.25
							Sub Total	**$ 0.25**

University	Ecole Centrale de Lyon			**Car #**	81	**Part Cost**	$ 4,50
System	Miscellaneous	**FileLink1**				**Qty**	2
Assembly	Safety	**FileLink2**		**FileLink1**			
Part	Roll Bar Padding	**FileLink3**		**FileLink2**		**Extended Cost**	$ 9,00
P/N Base	MS 04001			**FileLink3**			
Suffix	AA						
Details	Protect the driver's head in case of crash						

ItemOrder	Material	Use	UnitCost	Size1	Unit1	Size2	Unit2	Area Name	Area	Length	Density	Quantity	Sub Total
10	Roll Hoop Padding	Padding for Roll hoop	$ 0,05	30,00	cm							1,00	$ 1,50
20	Adhesive	Glue Padding to frame	$ -									-	$ -
												Sub Total	**$ 1,50**

ItemOrder	Process	Use	UnitCost	Unit	Quantity	Multiplier	Mult. Val.	Sub Total
10	Brush Apply	Apply glue to padding	$ 0,02	cm^2	150			$ 3,00
							Sub Total	**$ 3,00**

University	Ecole Cenrale de Lyon	**Car #**	81	**Asm Cost**	$ 231.34
System	Miscellaneous, Fit & Finish			**Qty**	1
Assembly	Seat	**FileLink1**			
P/N Base	MS A0005	**FileLink2**		**Extended Cost**	$ 231.34
Suffix	AA	**FileLink3**			
Details	Holds the driver in place				

ItemOrder	Part	Part Cost	Quantity	Sub Total
10	Seat	$ 208.13	1	$ 208.13
20	Lower Seat Tabs	$ 1.28	2	$ 2.56
30	Back Seat Tabs	$ 2.16	2	$ 4.31
			Sub Total	**$ 215.01**

ItemOrder	Material	Use	UnitCost	Size1	Unit1	Size2	Unit2	Area Name	Area	Length	Density	Quantity	Sub Total
10	Paint	Steel tabs painting	$ 10.00	0.01	m^2							0.01	$ 0.05
20	Structural Foam	Under seat to protect from frame vibration	$ 125.00	0.02	kg							0.02	$ 2.50
30	Tape	Fix foam	$ -										$ -
												Sub Total	**$ 2.55**

ItemOrder	Process	Use	UnitCost	Unit	Quantity	Multiplier	Mult. Val.	Sub Total
10	Weld	Tabs welding on frame	$ 0.15	cm	10			$ 1.50
20	Aerosol apply	Paint tabs	$ 5.25	m^2	0.005			$ 0.03
30	Non-metallic cutting <= 50.8 mm	Cut foam	$ 0.70	cut	4	Material - Foam	0.33	$ 0.92
40	Assemble, 1 kg, Line-on-Line	Place foam	$ 0.13	unit	4			$ 0.50
50	Tape	Fix foam	$ 0.80	m	2			$ 1.60
60	Assemble, 3 kg, Line-on-Line	Insert seat	$ 0.38	unit	1			$ 0.38
70	Ratchet <= 25.4 mm	Bolt seat to frame	$ 0.75	unit	4			$ 3.00
80	Reaction Tool <= 25.4 mm	Bolt seat to frame	$ 0.25	unit	4			$ 1.00
							Sub Total	**$ 8.93**

ItemOrder	Fastener	Use	UnitCost	Size1	Unit1	Size2	Unit2	Quantity	Sub Total
10	Bolt, Grade 8.8 (SAE 5)	Attach seat to tabs	$ 0.08	8	mm	20	mm	4	$ 0.33
20	Nut, Grade 8.8 (SAE 5)	Attach seat to tabs	$ 0.45	8	mm			4	$ 1.78
30	Washer, Grade 8.8 (SAE 5)	Attach seat to tabs	$ 0.01	8	mm			8	$ 0.08
								Sub Total	**$ 2.19**

ItemOrder	Tooling	Use	UnitCost	Unit	Quantity	PVF	FractionIncluded	Sub Total
10	Welds - Welding Fixture	Tabs welding on frame	$ 500.00	point	16	3000	1	$ 2.67
							Sub Total	**$ 2.67**

University	Ecole Centrale de Lyon			**Car #**	81	**Part Cost**	$ 208.13
System	Miscellaneous, Fit & Finish	**FileLink1**				**Qty**	1
Assembly	Seat	**FileLink2**		**FileLink1**			
Part	Seat	**FileLink3**		**FileLink2**		**Extended Cost**	$ 208.13
P/N Base	MS 05001			**FileLink3**			
Suffix	AA						
Details	Seat itself						

ItemOrder	Material	Use	UnitCost	Size1	Unit1	Size2	Unit2	Area Name	Area	Length	Density	Quantity	Sub Total
10	Glass Fiber, 1 Ply	Material for part	$ 100.00	0.8	kg							2.00	$ 160.00
20	Grommet, Elastomer	For harness holes	$ 0.05									16.00	$ 0.80
												Sub Total	**$ 160.80**

ItemOrder	Process	Use	UnitCost	Unit	Quantity	Multiplier	Mult. Val.	Sub Total
10	Lamination, Manual	Lamination	$ 35.00	m^2	0.4	Repeat 2	2	$ 28.00
20	Resin application, Manual	Resin application	$ 5.00	m^2	0.4	Repeat 2	2	$ 4.00
30	Cure, Room Temperature	Cure	$ 10.00	m^2	0.4			$ 4.00
40	Non-metallic cutting > 76.2 mm	Cutout harness holes	$ 1.40	cut	4			$ 5.60
50	Assemble, 1 kg, Interference	Insert gromets	$ 0.19	unit	16.00			$ 3.00
60	Drilled holes < 25.4 mm dia.	Cutout fixation holes	$ 0.35	hole	4			$ 1.40
							Sub Total	**$ 46.00**

ItemOrder	Tooling	Use	UnitCost	Unit	Quantity	PVF	FracIncld	Sub Total
10	Lamination - Composite Tool	Lamination	$ 10 000.00	m^2	0.4	3000	1	$ 1.33
							Sub Total	**$ 1.33**

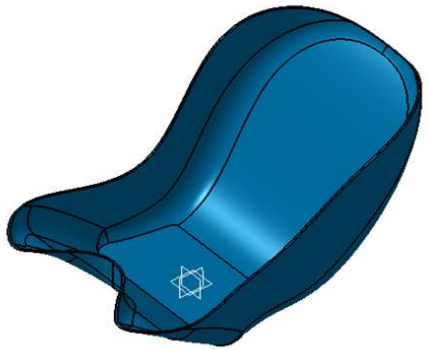

University	Ecole Centrale de Lyon			**Car #**	81	**Part Cost**	$ 1,28
System	Miscellaneous	**FileLink1**				**Qty**	2
Assembly	Seat	**FileLink2**		**FileLink1**			
Part	Lower Seat Tabs	**FileLink3**		**FileLink2**		**Extended Cost**	$ 2,56
P/N Base	MS 05002			**FileLink3**			
Suffix	AA						
Details	Attach Seat to Frame						

ItemOrder	Material	Use	UnitCost	Size1	Unit1	Size2	Unit2	Area Name	Area	Length	Density	Quantity	Sub Total
10	Steel, Mild	Material for part	$ 2,25	20	mm	100	mm	Rectangular A	2,00E-03	0,002	7 800	1,00	$ 0,07
												Sub Total	**$ 0,07**

ItemOrder	Process	Use	UnitCost	Unit	Quantity	Multiplier	Mult. Val.	Sub Total
10	Machining Setup, Install and remove	Setup for laser cutting	$ 1,30	unit	1	2 parts cut from a single machine setup	0,5	$ 0,65
20	Laser Cut	Cutout shape	$ 0,01	cm	7	Material - Steel	3	$ 0,21
30	Drilled holes < 25.4 mm dia.	Attachment holes	$ 0,35	hole	1			$ 0,35
							Sub Total	**$ 1,21**

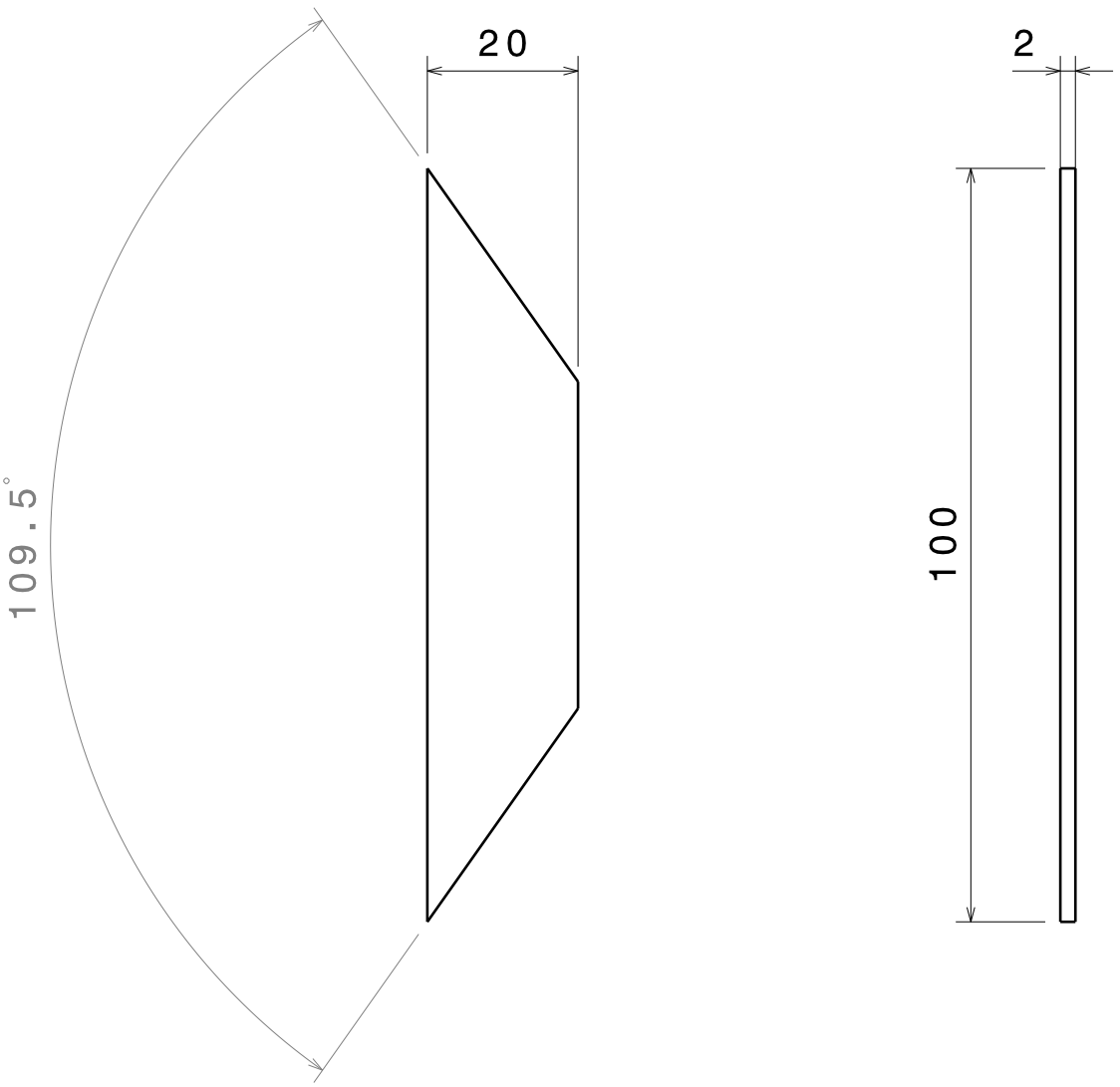

Tolérances générales
ISO 2768 mK

Taille A4		Ecurie Piston Sport Auto	
Dessiné par Andrés Poveda	Date 09/12/2014	Désignation Chape Inferieure Baquet	
Coordonnées Tel : 06 71 19 74 32 andres.poveda@ecl13.ec-lyon.fr		Quantité 2	Matériau Acier S235	Version 1.0
Plan vérifié par JGR		Echelle 1:1	Numéro du plan 15-M-032	Feuille 1/1

University	Ecole Centrale de Lyon			**Car #**	81	**Part Cost**	$ 2.16
System	Miscellaneous, Fit & Finish	**FileLink1**				**Qty**	2
Assembly	Seat	**FileLink2**		**FileLink1**			
Part	Back Seat Tabs	**FileLink3**		**FileLink2**		**Extended Cost**	$ 4.31
P/N Base	MS 05003			**FileLink3**			
Suffix	AA						
Details	Attach Seat to Frame						

ItemOrder	Material	Use	UnitCost	Size1	Unit1	Size2	Unit2	Area Name	Area	Length	Density	Quantity	Sub Total
10	Steel, Mild	Material for part	$ 2.25	21	mm	78	mm	Rectangular Area	0.001638	0.002	7 800	1.00	$ 0.06
												Sub Total	**$ 0.06**

ItemOrder	Process	Use	UnitCost	Unit	Quantity	Multiplier	Mult. Val.	Sub Total
10	Machining Setup, Install and remove	Setup for laser cutting	$ 1.30	unit	1	2 parts cut from a single machine setup	0.5	$ 0.65
20	Laser Cut	Cutout shape	$ 0.01	cm	20	Material - Steel	3	$ 0.60
30	Sheet metal bends	Give shape	$ 0.25	bend	2			$ 0.50
40	Drilled holes < 25.4 mm dia.	Attachment holes	$ 0.35	hole	1			$ 0.35
							Sub Total	**$ 2.10**

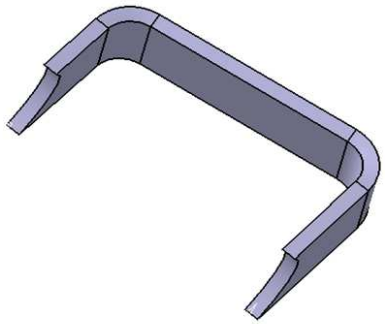

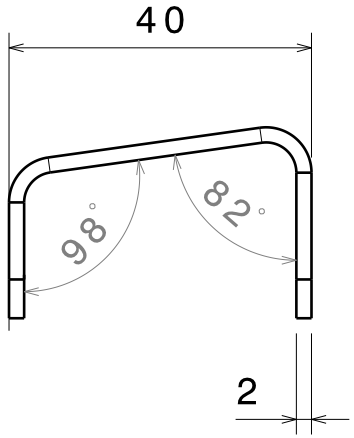

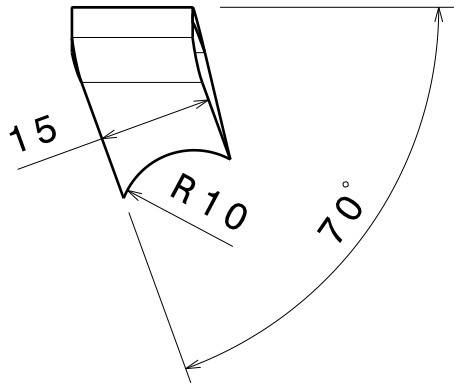

Tolérances générales
ISO 2768 mK

Taille A4		Ecurie Piston Sport Auto
Dessiné par Andrés Poveda	Date 09/12/2014	Désignation Chape Arriere Baquet
Coordonnées Tel : 06 71 19 74 32 andres.poveda@ecl13.ec-lyon.fr		Quantité 1+1 / Matériau Acier S235 / Version 1.0
Plan vérifié par JGR 337		Echelle 1:1 / Numéro du plan 15-M-033 / Feuille 1/1

ÉCOLE CENTRALE LYON

STEERING SYSTEM

EPSA TEAM

CAR # 81

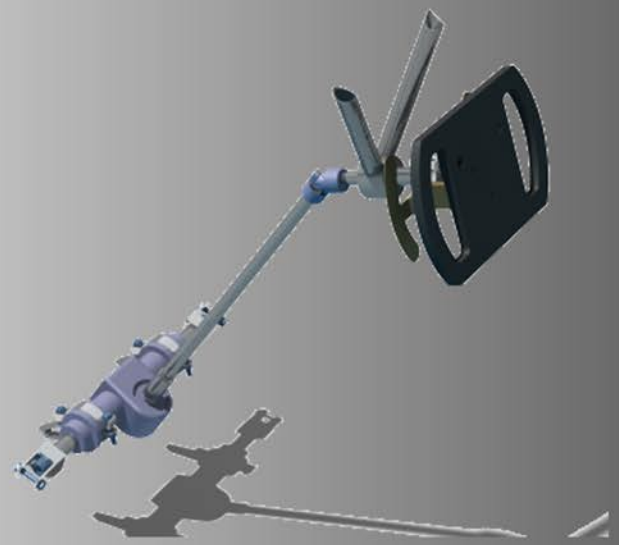

Ecurie Piston Sport Auto

University	Ecole Centrale de Lyon	Car #	81	Asm Cost	89.12
System	Steering System			Qty	1
Assembly	Steering column	FileLink1			
P/N Base	ST A0001	FileLink2		Extended Cost	$ 89.12
Suffix	AA	FileLink3			
Details					

ItemOrder	Part	Part Cost	Quantity	Sub Total
10	Steering Wheel Mount	$ 10.53	1	$ 10.53
20	First column tube	$ 4.70	1	$ 4.70
30	Second column tube	$ 1.39	1	$ 1.39
40	Sleeve	$ 4.38	2	$ 8.75
			Sub Total	$ 25.36

ItemOrder	Material	Use	UnitCost	Size1	Unit1	Size2	Unit2	Area Name	Area	Length	Density	Quantity	Sub Total
10	Steering column universal joint		$ 25.00	20	mm					0.08		1.00	$ 25.00
20	Paint	Steering wheel mount	$ 10.00	165	m^2							0.02	$ 0.22
30	Bearing		$ 15.00	16	mm					0.01		2.00	$ 30.00
												Sub Total	$ 55.22

ItemOrder	Process	Use	UnitCost	Unit	Quantity	Multiplier	Mult. Val.	Sub Total
10	Weld	Steering wheel mount welding	$ 0.15	cm	13			$ 1.95
20	Aerosol apply	steering wheel mount painting	$ 5.25	m^2	0.02			$ 0.11
30	Weld	Column	$ 0.15	cm	5.5			$ 0.83
40	Aerosol apply	First column tube	$ 5.25	m^2	0.002			$ 0.01
50	Assemble	Assemble of bearings	$ 0.19	unit	2			$ 0.38
60	Assemble	Assemble column and mount	$ 0.19	unit	1			$ 0.19
							Sub Total	$ 2.88

ItemOrder	Fastener	Use	UnitCost	Size1	Unit1	Size2	Unit2	Quantity	Sub Total
10	Bolt,Grade 8.8 (SAE)	Example : bolt Part 1 on Part 2	$ 0.14	8	mm	35	mm	2	$ 0.28
20	Washer, Grade 8.8 (SAE 5)	Example : bolt Part 1 on Part 2	$ 0.01	8	mm			2	$ 0.02
30	Nut, Grade 8.8 (SAE 5)	Example : bolt Part 1 on Part 2	$ 0.01	12	mm			12	$ 0.12
40	Retaining Ring, External		$ 0.04	12	mm			6	$ 0.24
								Sub Total	$ 0.66

ItemOrder	Tooling	Use	UnitCost	Unit	Quantity	PVF	FractionIncluded	Sub Total
10	Welds - Welding Fixture	Exemple de Tooling	$ 500.00	point	30	3000	1	$ 5.00
							Sub Total	$ 5.00

University	Ecole Centrale de Lyon			**Car #**	81	**Part Cost**	$ 10.53
System	Steering System	**FileLink1**				**Qty**	1
Assembly	Steering Column	**FileLink2**		**FileLink1**			
Part	Steering Wheel Mount	**FileLink3**		**FileLink2**		**Extended Cost**	$ 10.53
P/N Base	ST 01001			**FileLink3**			
Suffix	AA						
Details							

ItemOrder	Material	Use	UnitCost	Size1	Unit1	Size2	Unit2	Area Name	Area	Length	Density	Quantity	Sub Total
10	Steel, Mild (per kg)	Stock for column washer	$ 2.25	21	mm			Diameter	0.00138474	0.031	7 000	1.00	$ 0.68
20	Tubing, Steel	Liaison with the frame	$ 2.25	10	mm	1.5	mm	Radius Thickness	0.000314	0.130	7 000	2.00	$ 1.29
												Sub Total	**$ 1.96**

ItemOrder	Process	Use	UnitCost	Unit	Quantity	Multiplier	Mult. Val.	Sub Total
10	Machining Setup, Install and remove	Setup for machining and removal	$ 1.30	unit	1			$ 1.30
20	Drilled holes	Radius for axis	$ 0.35	hole	1			$ 0.35
30	Machining	First hole for ball bearing	$ 0.04	cm^3	3		3	$ 0.36
40	Ream hole	Reamed hole for ball bearing	$ 0.35	hole	1			$ 0.35
50	Machining Setup, change	Setup for last machining process	$ 0.65	unit	1			$ 0.65
60	Machining	Second hole for ball bearing	$ 0.04	cm^3	3		3	$ 0.36
70	Ream hole	Reamed hole for ball bearing	$ 0.35	hole	1			$ 0.35
80	Machining Setup, Install and remove	Setup for machining and removal	$ 1.30	unit	1			$ 1.30
90	Laser cut	Preparation of the 2 tubes	$ 0.01	cm	26			$ 0.26
100	Weld	Welding of tubes on the machined part	$ 0.15	cm	13		1	$ 1.95
							Sub Total	**$ 7.23**

ItemOrder	Tooling	Use	UnitCost	Unit	Quantity	PVF	FracIncld	Sub Total
10	Welds - Welding Fixture	Steel mounts welding on frame	$ 500.00	point	8	3000	1	$ 1.33
							Sub Total	**$ 1.33**

University	Ecole Centrale de Lyon			**Car #**	81	**Part Cost**	$ 4.70
System	Steering System	**FileLink1**				**Qty**	1
Assembly	Steering Column	**FileLink2**		**FileLink1**			
Part	First colum tube	**FileLink3**		**FileLink2**		**Extended Cost**	$ 4.70
P/N Base	ST 01002			**FileLink3**			
Suffix	AA						
Details							

ItemOrder	Material	Use	UnitCost	Size1	Unit1	Size2	Unit2	Area Name	Area	Length	Density	Quantity	Sub Total
10	Steel, Mild (per kg)	stock for column washer	$ 2.25	9.5	mm			Radius	7.08E-05	0.082	7860	1	$ 0.10
												Sub Total	**$ 0.10**

ItemOrder	Process	Use	UnitCost	Unit	Quantity	Multiplier	Mult. Val.	Sub Total
10	Machining Setup, Install and remove	Setup for laser cutting	$ 1.30	unit	1			$ 1.30
20	Drilled holes	Hole for bushing	$ 0.35	hole	1			$ 0.35
30	Machining	Reduction of radius for bearings	$ 0.04	cm^3	13.4	Material Steel	3	$ 1.61
40	Machining Setup, change	Setup for last machining process	$ 0.65	unit	1			$ 0.65
50	Machining	Hole for quick release welding	$ 0.04	cm^3	2.8	Material Steel	3	$ 0.34
60	Drilled holes	Holes for assembly with pins	$ 0.35	hole	1			$ 0.35
							Sub Total	**$ 4.59**

University	Ecole Centrale de Lyon			**Car #**	81	**Part Cost**	$ 1.39
System	Steering System	**FileLink1**				**Qty**	1
Assembly	Steering Column	**FileLink2**		**FileLink1**			
Part	Second column Tube	**FileLink3**		**FileLink2**		**Extended Cost**	$ 1.39
P/N Base	ST 01003			**FileLink3**			
Suffix	AA						
Details							

ItemOrder	Material	Use	UnitCost	Size1	Unit1	Size2	Unit2	Area Name	Area	Length	Density	Quantity	Sub Total
10	Tubing, steel	Tube for steering column	$ 2.25	7.5	mm	1.5	mm	Radius Thickness	0.000063585	0.35	7 860.00	1	$ 0.39
												Sub Total	**$ 0.39**

ItemOrder	Process	Use	UnitCost	Unit	Quantity	Multiplier	Mult. Val.	Sub Total
10	Tube cut	Cut to proper length	$ 0.15	cm	2			$ 0.30
20	Drilled holes	holes for assembly with pins	$ 0.35	hole	2			$ 0.70
							Sub Total	**$ 1.00**

University	Ecole Centrale de Lyon			**Car #**	81	**Part Cost**	$ 4.38
System	Steering System	**FileLink1**				**Qty**	2
Assembly	Steering column	**FileLink2**		**FileLink1**			
Part	Sleeve	**FileLink3**		**FileLink2**		**Extended Cost**	$ 8.75
P/N Base	ST 01004			**FileLink3**			
Suffix	AA						
Details							

ItemOrder	Material	Use	UnitCost	Size1	Unit1	Size2	Unit2	Area Name	Area	Length	Density	Quantity	Sub Total
10	Steel, Mild	Mounts material	$ 2.25	7.5	mm			Radius	0.00260	0.051	7 860.00	1	$ 2.35
												Sub Total	**$ 2.35**

ItemOrder	Process	Use	UnitCost	Unit	Quantity	Multiplier	Mult. Val.	Sub Total
10	Machining Setup, Install and remove	Setup for machining	$ 1.30	unit	1			$ 1.30
20	Machining	First radius reduction	$ 0.04	cm^3	1			$ 0.04
30	Machining Setup, Change	Setup part for machining of the other side	$ 0.65	unit	1			$ 0.65
40	Machining	Second radius reduction	$ 0.04	cm^3	1			$ 0.04
							Sub Total	**$ 2.03**

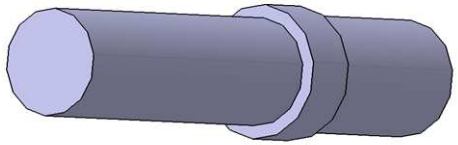

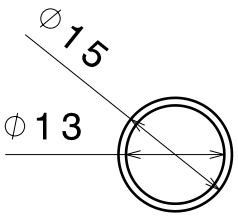

Vue de droite
Echelle : 1:1

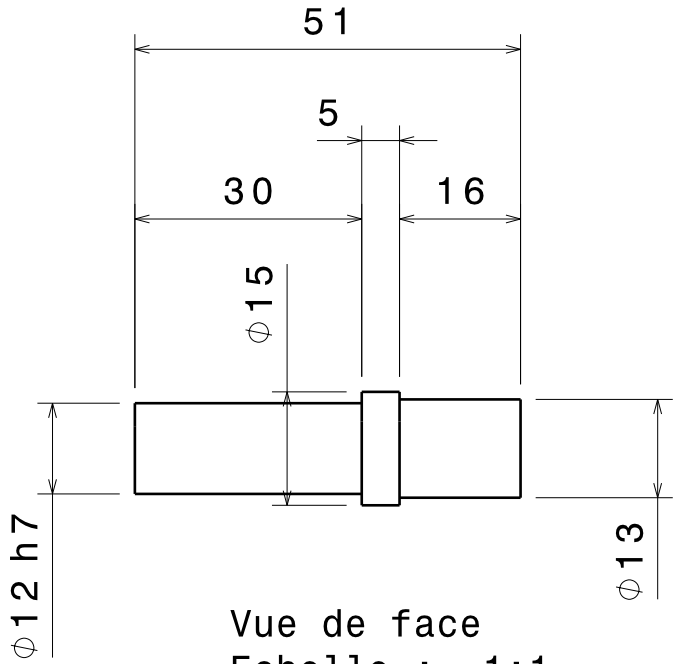

Vue de face
Echelle : 1:1

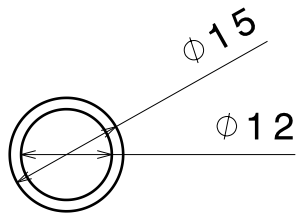

Vue de gauche
Echelle : 1:1

Tolérance générales ISO 2768 - mK

Taille A4		Ecurie Piston Sport Auto
Dessiné par Edgar Peirsegaele	Date 31/01/2015	Désignation Manchons Cardan
Coordonnées Tel : 06 64 23 39 16 edgar.peirsegaele@ecl13.ec-lyon.fr		Quantité 2 / Matériau Acier S350 / Version 1.0
Plan vérifié par CCN 344		Echelle 1:1 / Numéro du plan 15-B-070 / Feuille 1/1

University	Ecole Centrale de Lyon	**Car #**	81	**Asm Cost**	75.61
System	Steering System			**Qty**	1
Assembly	Steering Rack assembly	**FileLink1**			
P/N Base	ST A0002	**FileLink2**		**Extended Cost**	$ 75.61
Suffix	AA	**FileLink3**			
Details					

ItemOrder	Part	Part Cost	Quantity	Sub Total
10	Rack	$ 3.61	1	$ 3.61
20	Rack pinion	$ 10.32	1	$ 10.32
30	Rack Housing	$ 14.79	1	$ 14.79
40	Lower Rack Mount	$ 3.52	2	$ 7.03
50	Upper Rack Mount	$ 3.61	2	$ 7.22
60	Mount hold	$ 3.61	4	$ 14.44
70	Rack stop	$ 4.14	2	$ 8.27
80	Lower rack mount fob	$ 2.33	2	$ 4.66
			Sub Total	**$ 70.34**

ItemOrder	Material	Use	UnitCost	Size1	Unit1	Size2	Unit2	Area Name	Area	Length	Density	Quantity	Sub Total
10	Grease Nipple, Straight	Nipple to grease the rack	$ 0.50	unit								1.00	$ 0.50
												Sub Total	**$ 0.50**

ItemOrder	Process	Use	UnitCost	Unit	Quantity	Multiplier	Mult. Val.	Sub Total
10	Weld	Welding of lower mount	$ 0.15	cm	7.5			$ 1.13
20	Assemble	Assemble the Rack, the pinion and the rack housing	$ 0.13	unit	1			$ 0.13
30	Assemble	Assemble rack stop on the rack	$ 0.13	unit	2			$ 0.26
40	Ratchet	Put the bolts to lock the rack stops	$ 0.50	unit	2			$ 1.00
50	Assemble	Assemble rack on the lower mounts	$ 0.19	unit	1			$ 0.19
60	Assemble	Assemble the upper mounts	$ 0.13	unit	2			$ 0.26
70	Ratchet	Put bolts onto the mounts	$ 0.50	unit	2			$ 1.00
							Sub Total	**$ 1.52**

ItemOrder	Fastener	Use	UnitCost	Size1	Unit1	Size2	Unit2	Quantity	Sub Total
10	Bolt,Grade 8.8 (SAE)	Bolts between rack mounts	$ 0.09	6	mm	35	mm	4	$ 0.36
20	Washer, Grade 8.8 (SAE 5)	Washers for bolts	$ 0.01	8	mm			8	$ 0.08
30	Nut, Grade 8.8 (SAE 5)	Nuts for bolts	$ 0.03	6	mm			4	$ 0.12
40	Bolt,Grade 8.8 (SAE)	Bolts for rack stop	$ 0.53	12	mm	60	mm	2	$ 1.06
50	Retaining Ring, Internat	ring retaining the pinion	$ 0.30	40	mm			1	$ 0.30
								Sub Total	**$ 1.92**

ItemOrder	Tooling	Use	UnitCost	Unit	Quantity	PVF	FractionInclu	Sub Total
10	Welds - Welding Fixture	lower mounts and mount tabs welding on frame	$ 500.00	point	8	3000	1	$ 1.33
							Sub Total	**$ 1.33**

University	Ecole Centrale de Lyon			**Car #**	81	**Part Cost**	$ 3.61
System	Steering System	**FileLink1**				**Qty**	1
Assembly	Steering Rack Assembly	**FileLink2**		**FileLink1**			
Part	Rack	**FileLink3**		**FileLink2**		**Extended Cost**	$ 3.61
P/N Base	ST 02001			**FileLink3**			
Suffix	AA						
Details							

ItemOrder	Material	Use	UnitCost	Size1	Unit1	Size2	Unit2	Area Name	Area	Length	Density	Quantity	Sub Total
10	Steel, Mild (per kg)	Stock for the rack	$ 2.25	10	mm			Round area Radius 10mm	0.000313	0.30	7 860.00	1	$ 1.66
												Sub Total	**$ 1.66**

ItemOrder	Process	Use	UnitCost	Unit	Quantity	Multiplier	Mult. Val.	Sub Total
10	Drilled holes	Holes for tie rod assembling	$ 0.35	hole	2		1	$ 0.70
20	Broach, External	Teeth machining	$ 0.50	cm	3			$ 1.25
							Sub Total	**$ 1.95**

University	Ecole Centrale de Lyon			**Car #**	81	**Part Cost**	$ 10.32
System	Steering System	**FileLink1**				**Qty**	1
Assembly	Steering Rack Assembly	**FileLink2**		**FileLink1**			
Part	Rack pinion	**FileLink3**		**FileLink2**		**Extended Cost**	$ 10.32
P/N Base	ST 02002			**FileLink3**			
Suffix	AA						
Details							

ItemOrder	Material	Use	UnitCost	Size1	Unit1	Size2	Unit2	Area Name	Area	Length	Density	Quantity	Sub Total
10	Steel, Mild (per kg)	Stock for the pinion	$ 2.25	25	mm			Round area Radius 25mm	0.002	0.05	7 860.00	1	$ 1.77
												Sub Total	**$ 1.77**

ItemOrder	Process	Use	UnitCost	Unit	Quantity	Multiplier	Mult. Val.	Sub Total
10	Machining Setup, Install and remove	Holes for tie rod assembling	$ 1.30	unit	1			$ 1.30
20	Machining	Machining the form to insert colum	$ 0.04	cm^3	50	Steel	3	$ 6.00
30	Broach, external	Teeth machining	$ 0.50	cm	2.5			$ 1.25
							Sub Total	**$ 8.55**

University	Ecole Centrale de Lyon			**Car #**	81	**Part Cost**	$ 14.79
System	Steering System	**FileLink1**				**Qty**	1
Assembly	Steering Rack Assembly	**FileLink2**		**FileLink1**			
Part	Rack Housing	**FileLink3**		**FileLink2**		**Extended Cost**	$ 14.79
P/N Base	ST 02003			**FileLink3**			
Suffix	AA						
Details							

ItemOrder	Material	Use	UnitCost	Size1	Unit1	Size2	Unit2	Area Name	Area	Length	Density	Quantity	Sub Total
10	Aluminium, normal (per kg)	Material for the rack housing	$ 4.20	0.3	kg							1	$ 4.20
												Sub Total	**$ 4.20**

ItemOrder	Process	Use	UnitCost	Unit	Quantity	Multiplier	Mult. Val.	Sub Total
10	Die casting	Housing casting	$ 4.00	kh	0.3			$ 1.20
20	Machining Setup, Install and remove		$ 1.30	unit	1			$ 1.30
30	Machining	Machining making proper surfaces	$ 0.04	cm^3	18	Aluminium	1	$ 0.72
40	Broach, external	Reamed hole for the rack translation	$ 0.35	cm	2.0			$ 0.70
							Sub Total	**$ 3.92**

ItemOrder	Tooling	Use	UnitCost	Unit	Quantity	PVF	FracIncld	Sub Total
10	Die casting - Die		$ 10 000.00	die	2	3000	1	$ 6.67
							Sub Total	**$ 6.67**

University	Ecole Centrale de Lyon			**Car #**	81	**Part Cost**	$ 3.52
System	Steering System	**FileLink1**				**Qty**	2
Assembly	Steering Rack Assembly	**FileLink2**		**FileLink1**			
Part	Lower Rack Mount	**FileLink3**		**FileLink2**		**Extended Cost**	$ 7.03
P/N Base	ST 02004			**FileLink3**			
Suffix	AA						
Details							

ItemOrder	Material	Use	UnitCost	Size1	Unit1	Size2	Unit2	Area Name	Area	Length	Density	Quantity	Sub Total
10	Steel, Mild (per kg)	Stock	$ 2.25	115	mm	25	mm	Rectangular aera	2.87500E-03	0.01	7 860.00	1	$ 0.51
												Sub Total	**$ 0.51**

ItemOrder	Process	Use	UnitCost	Unit	Quantity	Multiplier	Mult. Val.	Sub Total
10	Machining Setup, Install and remove	Setup for laser cut	$ 1.30	unit	1			$ 1.30
20	Laser cut	Outlines and holes	$ 0.01	cm	34	Steel	3	$ 1.01
30	Drilled holes	holes	$ 0.35	hole	2.0			$ 0.70
							Sub Total	**$ 3.01**

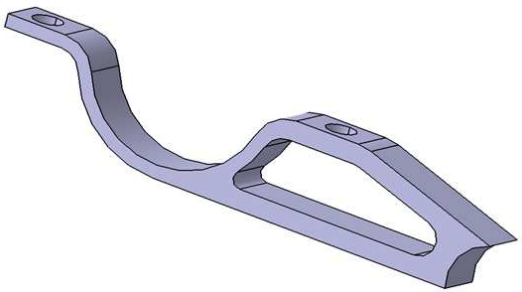

University	Ecole Centrale de Lyon			**Car #**	81	**Part Cost**	$ 2.35
System	Steering System	**FileLink1**				**Qty**	4
Assembly	Steering Rack Assembly	**FileLink2**		**FileLink1**			
Part	Mounts hold	**FileLink3**		**FileLink2**		**Extended Cost**	$ 9.38
P/N Base	ST 02005			**FileLink3**			
Suffix	AA						
Details							

ItemOrder	Material	Use	UnitCost	Size1	Unit1	Size2	Unit2	Area Name	Area	Length	Density	Quantity	Sub Total
10	Steel, Mild (per kg)	Stock	$ 2.25	46	mm	23	mm	Rectangular aera	1.05800E-03	0.00	7 860.00	1	$ 0.04
												Sub Total	**$ 0.04**

ItemOrder	Process	Use	UnitCost	Unit	Quantity	Multiplier	Mult. Val.	Sub Total
10	Machining Setup, Install and remove	Setup for laser cut	$ 1.30	unit	1			$ 1.30
20	Laser cut	Outlines	$ 0.01	cm	34	Steel	3	$ 1.01
							Sub Total	**$ 2.31**

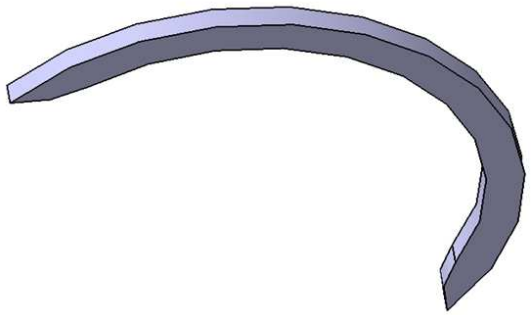

University	Ecole Centrale de Lyon			**Car #**	81	**Part Cost**	$ 2.23
System	Steering System	**FileLink1**				**Qty**	2
Assembly	Steering Rack Assembly	**FileLink2**		**FileLink1**			
Part	Upper Rack Mount	**FileLink3**		**FileLink2**		**Extended Cost**	$ 4.46
P/N Base	ST 02006			**FileLink3**			
Suffix	AA						
Details							

ItemOrder	Material	Use	UnitCost	Size1	Unit1	Size2	Unit2	Area Name	Area	Length	Density	Quantity	Sub Total
10	Aluminium, normal (per kg)	Stock	$ 4.20	68	mm	20	mm	Rectangular aera	0.00136	0.0015	2 710.00	1	$ 0.02
												Sub Total	**$ 0.02**

ItemOrder	Process	Use	UnitCost	Unit	Quantity	Multiplier	Mult. Val.	Sub Total
10	Machining Setup, Install and remove	Setup for machining and removal	$ 1.30	unit	1			$ 1.30
20	Machining	Material removal - side view profile	$ 0.04	cm^3	5.2	Material - Aluminium	1	$ 0.21
30	Drilled holes	holes	$ 0.35	hole	2			$ 0.70
							Sub Total	**$ 2.21**

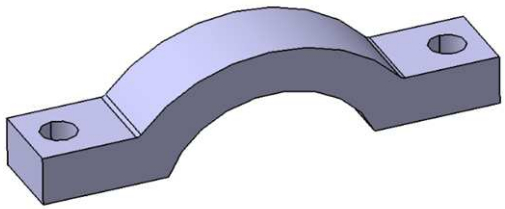

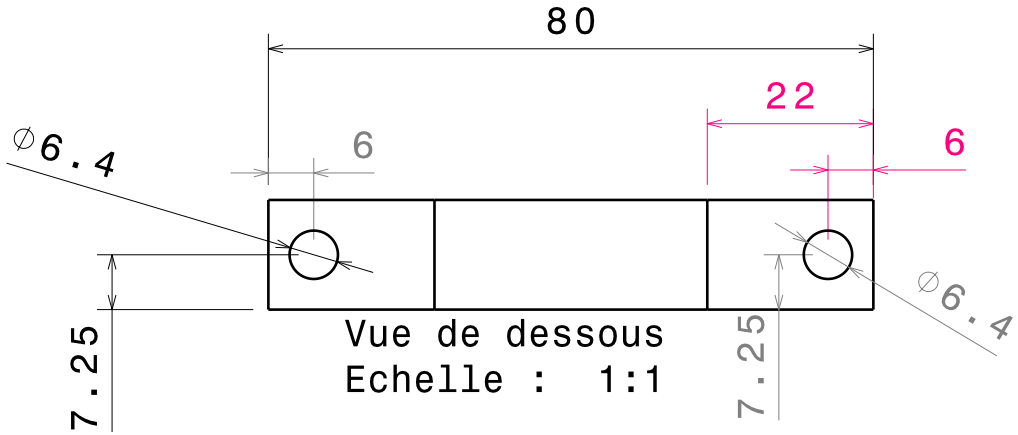

Vue de dessous
Echelle : 1:1

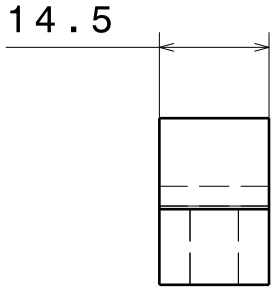

Vue de droite
Echelle : 1:1

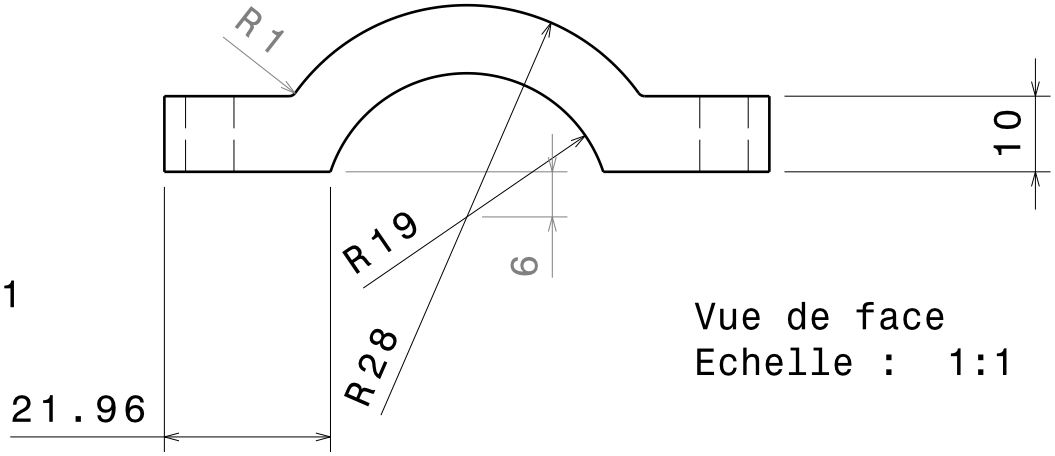

Vue de face
Echelle : 1:1

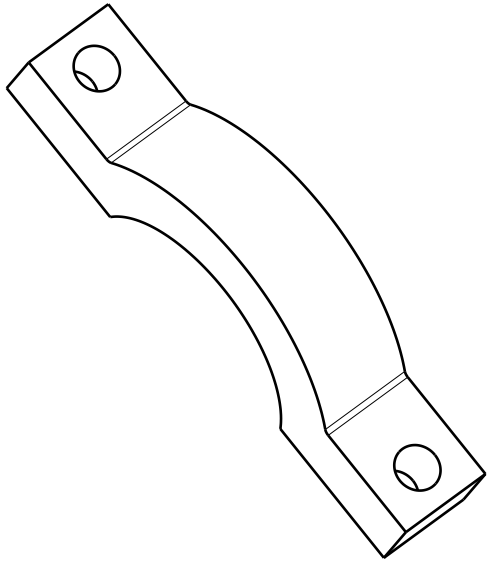

Vue isométrique
Echelle : 1:1

Taille A4		Ecurie Piston Sport Auto
Dessiné par Edgar Peirsegaele	Date 06/01/2015	Désignation: Chape Crémaillère B
Coordonnées Tel : 06 64 23 39 16 edgar.peirsegaele@ecl13.ec-lyon.fr		Quantité 2 / Matériau Alu au choix du fabricant / Version 1.0
Plan vérifié par CCN 353		Echelle 1:1 / Numéro du plan 15-B-067 / Feuille 1/1

University	Ecole Centrale de Lyon			**Car #**	81	**Part Cost**	$ 4.14
System	Steering System	**FileLink1**				**Qty**	2
Assembly	Steering Rack Assembly	**FileLink2**		**FileLink1**			
Part	Rack Stop	**FileLink3**		**FileLink2**		**Extended Cost**	$ 8.27
P/N Base	ST 02007			**FileLink3**			
Suffix	AA						
Details							

ItemOrder	Material	Use	UnitCost	Size1	Unit1	Size2	Unit2	Area Name	Area	Length	Density	Quantity	Sub Total
10	Aluminium, normal (per kg)	Stock	$ 4.20	26	mm	28	mm	Rectangular aera	7.28000E-04	0.05	2 710.00	1	$ 0.42
												Sub Total	**$ 0.42**

ItemOrder	Process	Use	UnitCost	Unit	Quantity	Multiplier	Mult. Val.	Sub Total
10	Machining Setup, Install and remove	Setup for machining and removal	$ 1.30	unit	1			$ 1.30
20	Machining	Material removal - side view profile	$ 0.04	cm^3	0.22		1	$ 0.01
30	Drilled holes	Hole for assembly	$ 0.35	hole	1			$ 0.35
40	Machining setup, change	Setup for machining process	$ 0.65	unit	1			$ 0.65
50	Drilled holes	Hole for assembly	$ 0.35	hole	1			$ 0.35
60	Machining	Hole for rack assembly	$ 0.04	cm^3	1.5			$ 0.06
70	Machining setup, change	Steup for last machining process	$ 0.65	unit	1			$ 0.65
80	Drilled holes	Hole for rod assembly	$ 0.04	cm^3	8.6			$ 0.34
							Sub Total	**$ 3.71**

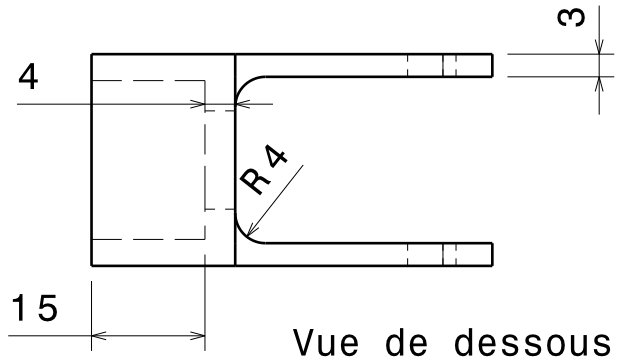

Vue de dessous
Echelle : 1:1

Tolérance générales ISO 2768 - mK

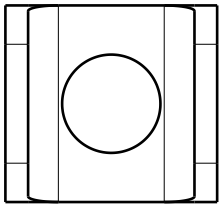

Vue de droite
Echelle : 1:1

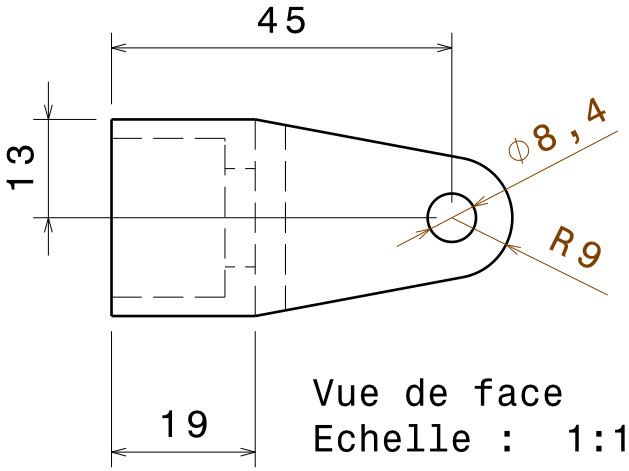

Vue de face
Echelle : 1:1

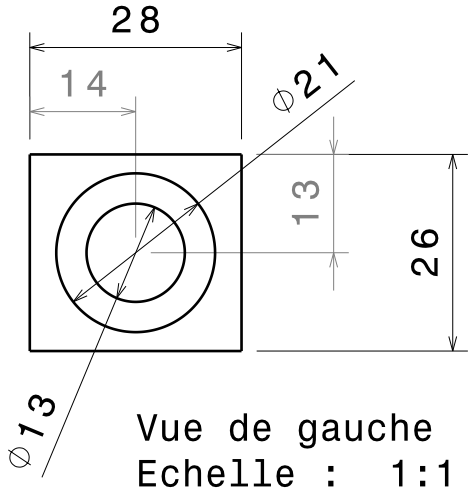

Vue de gauche
Echelle : 1:1

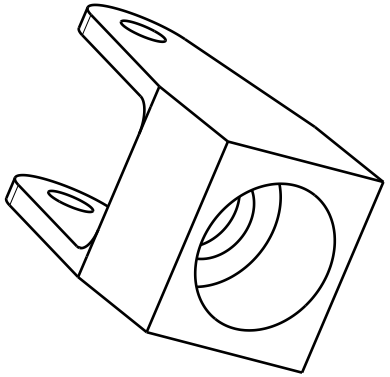

Vue isométrique
Echelle : 1:1

Taille A4		Ecurie Piston Sport Auto
Dessiné par Edgar Peirsegaele	Date 06/01/2015	Désignation: Butée de crémaillère
Coordonnées Tel : 06 64 23 39 16 edgar.peirsegaele@ecl13.ec-lyon.fr		Quantité 2 / Matériau Aluminium 2017 / Version 0.1
Plan vérifié par Victor Cador 355		Echelle 1:1 / Numéro du plan XXX / Feuille 1/1

University	Ecole Centrale de Lyon			**Car #**	81	**Part Cost**	$ 2.33
System	Steering System	**FileLink1**				**Qty**	4
Assembly	Steering Rack Assembly	**FileLink2**		**FileLink1**			
Part	Mounts hold	**FileLink3**		**FileLink2**		**Extended Cos**	$ 9.31
P/N Base	ST 02008			**FileLink3**			
Suffix	AA						
Details							

ItemOrder	Material	Use	UnitCost	Size1	Unit1	Size2	Unit2	Area Name	Area	Length	Density	Quantity	Sub Total
10	Steel, Mild (per kg)	Stock	$ 2.25	10	mm	57	mm	Rectangular aera	0.00057	0.002	7 860.00	1	$ 0.02
												Sub Total	**$ 0.02**

ItemOrder	Process	Use	UnitCost	Unit	Quantity	Multiplier	Mult. Val.	Sub Total
10	Machining Setup, Install and remove	Setup for laser cut	$ 1.30	unit	1			$ 1.30
20	Laser cut	Outlines	$ 0.01	cm	34	Steel	3	$ 1.01
							Sub Total	**$ 2.31**

University	Ecole Centrale de Lyon	**Car #**	81	**Asm Cost**	32.54
System	Steering System			**Qty**	2
Assembly	Quick Release	**FileLink1**			
P/N Base	ST A0002	**FileLink2**		**Extended Cost**	$ 65.08
Suffix	AA	**FileLink3**			
Details	Bought part				

ItemOrder	Part	Part Cost	Quantity	Sub Total
10	Quick Release Mount	$ 5.99	1	$ 5.99
20	Quick Release Sliding Part	$ 11.04	1	$ 11.04
30	Quick Release Fixed Part	$ 9.74	1	$ 9.74
			Sub Total	**$ 26.78**

ItemOrder	Material	Use	UnitCost	Size1	Unit1	Size2	Unit2	Area Name	Area	Length	Density	Quantity	Sub Total
10	Spring, ccompression (General)	Spring for sliding parts and balls	$ 1.00									4.00	$ 4.00
11	Steel, Mild (per kg)	Balls locking grooves	$ 2.25	5	mm			Balls diameter				3.00	$ 6.75
											7860	**Sub Total**	**$ 4.00**

ItemOrder	Process	Use	UnitCost	Unit	Quantity	Multiplier	Mult. Val.	Sub Total
10	Assemble	Assembly of sliding, fixed parts and spring	$ 0.13	unit	1			$ 0.13
20	Assemble	Assembly of spring and balls	$ 0.19	unit	1			$ 0.19
30	Weld	Welding of Quick Release Mount on forst column tube	$ 0.15	cm	6.2			$ 0.93
							Sub Total	**$ 1.25**

ItemOrder	Fastener	Use	UnitCost	Size1	Unit1	Size2	Unit2	Quantity	Sub Total
10	Retaining ring, internal	Ring to lock the quick release	$ 0.18	30	mm			1	$ 0.18
								Sub Total	**$ 0.18**

ItemOrder	Tooling	Use	UnitCost	Unit	Quantity	PVF	FractionInclu	Sub Total
10	Welds - Welding Fixture	Steel mounts welding on frame	$ 500.00	point	2	3000	1	$ 0.33
							Sub Total	**$ 0.33**

University	Ecole Centrale de Lyon			**Car #**	81	**Part Cost**	5.99
System	Steering System	**FileLink1**				**Qty**	1.00
Assembly	Quick Release	**FileLink2**		**FileLink1**			
Part	Quick Release Mount	**FileLink3**		**FileLink2**		**Extended Cost**	$ 5.99
P/N Base	ST 03001			**FileLink3**			
Suffix	AA						
Details							

ItemOrder	Material	Use	UnitCost	Size1	Unit1	Size2	Unit2	Area Name	Area	Length	Density	Quantity	Sub Total
10	Steel, Mild (per kg)	Steel for machining the part	$ 2.25	12.5	mm			Radius	0.049	0.073	7 860.00	1	$ 0.63
												Sub Total	**$ 0.63**

ItemOrder	Process	Use	UnitCost	Unit	Quantity	Multiplier	Mult. Val.	Sub Total
10	Machining Setup, Install and remove	Setup for machining	$ 1.30	unit	1			$ 1.30
20	Machining	Material removal	$ 0.04	cm^3	13		3	$ 1.56
30	Broach, external	Broach for external groove	$ 0.50	cm	5			$ 2.50
							Sub Total	**$ 5.36**

University	Ecole Centrale de Lyon			**Car #**	81	**Part Cost**	11.04
System	Steering System	**FileLink1**				**Qty**	1.00
Assembly	Quick Release	**FileLink2**		**FileLink1**			
Part	Quick Release Sliding part	**FileLink3**		**FileLink2**		**Extended Cost**	$ 11.04
P/N Base	ST 03002			**FileLink3**			
Suffix	AA						
Details							

ItemOrder	Material	Use	UnitCost	Size1	Unit1	Size2	Unit2	Area Name	Area	Length	Density	Quantity	Sub Total
10	Aluminium, normal (per kg)	Stock	$ 4.20	35.5	mm			Radius	0.0039	0.055	2 710.00	1	$ 2.44
												Sub Total	**$ 2.44**

ItemOrder	Process	Use	UnitCost	Unit	Quantity	Multiplier	Mult. Val.	Sub Total
10	Machining Setup, Install and remove	Setup for machining	$ 1.30	unit	1			$ 1.30
20	Machining	Material removal	$ 0.04	cm^3	120		1	$ 4.80
30	Broach, external	Broach for external groove	$ 0.50	cm	5			$ 2.50
40	Annodize		Free					
							Sub Total	**$ 8.60**

University	Ecole Centrale de Lyon			**Car #**	81	**Part Cost**	9.74
System	Steering System	**FileLink1**				**Qty**	1.00
Assembly	Quick Release	**FileLink2**		**FileLink1**			
Part	Quick Release Fixed part	**FileLink3**		**FileLink2**		**Extended Cost**	$ 9.74
P/N Base	ST 03003			**FileLink3**			
Suffix	AA						
Details							

ItemOrder	Material	Use	UnitCost	Size1	Unit1	Size2	Unit2	Area Name	Area	Length	Density	Quantity	Sub Total
10	Aluminium, normal (per kg)	Stock	$ 4.20	35.5	mm			Radius	0.0039	0.055	2 710.00	1	$ 2.44
												Sub Total	**$ 2.44**

ItemOrder	Process	Use	UnitCost	Unit	Quantity	Multiplier	Mult. Val.	Sub Total
10	Machining Setup, Install and remove	Setup for machining	$ 1.30	unit	1			$ 1.30
20	Machining	Material removal	$ 0.04	cm^3	150		1	$ 6.00
30	Annodize		$ -					
							Sub Total	**$ 7.30**

University	Ecole Centrale de Lyon	**Car #**	81	**Asm Cost**	35.12
System	Steering System			**Qty**	2
Assembly	Tie Rod Assembly	**FileLink1**			
P/N Base	ST A0004	**FileLink2**		**Extended Cost**	$ 70.23
Suffix	AA	**FileLink3**			
Details					

ItemOrder	Part	Part Cost	Quantity	Sub Total
10	Rode Tube	$ 15.07	1	$ 15.07
20	Upright Tapered Spacer	$ 1.66	2	$ 3.32
30	Rack Tapered Spacer	$ 1.66	2	$ 3.32
40	Tie Rod Insert	$ 2.95	2	$ 5.91
			Sub Total	**$ 27.61**

ItemOrder	Material	Use	UnitCost	Size1	Unit1	Size2	Unit2	Area Name	Area	Length	Density	Quantity	Sub Total
10	Adhesive	Included in process											$ -
11	Rod end, Industrial	Rod end for tie rod extremities	$ 1.94	6	mm			Balls diameter				2.00	$ 3.88
												Sub Total	**$ 3.88**

ItemOrder	Process	Use	UnitCost	Unit	Quantity	Multiplier	Mult. Val.	Sub Total
10	Brush Apply	Gluing the insert on the tube	$ 0.02	cm²	5.6	Repeat 2	2	$ 0.22
20	Ratchet	Put the nuts on the bolts	$ 0.50	unit	2			$ 1.00
30	Wrench	Put the nuts on the rod end	$ 1.00	unit	2			$ 2.00
							Sub Total	**$ 3.22**

ItemOrder	Fastener	Use	UnitCost	Size1	Unit1	Size2	Unit2	Quantity	Sub Total
10	Bolt, grade 8.8 (SAE 5)	Bolt linking to rack and wheel	$ 0.12	6	mm	50	mm	2	$ 0.24
20	Nut, grade 8.8 (SAE 5)	Nut to lock bearing	$ 0.03	6	mm			2	$ 0.06
30	Nut, grade 8.8 (SAE 5)	Nuts for bolts	$ 0.03	6	mm			2	$ 0.06
40	Washer, grade 8.8 (SAE 5)	Washers for bolt	$ 0.01		mm			4	$ 0.04
								Sub Total	**$ 0.40**

University	Ecole Centrale de Lyon			**Car #**	81	**Part Cost**	15.07
System	Steering System	**FileLink1**				**Qty**	1.00
Assembly	Tie Rod Assembly	**FileLink2**		**FileLink1**			
Part	Tie Rod Tube	**FileLink3**		**FileLink2**		**Extended Cost**	$ 15.07
P/N Base	ST 04001			**FileLink3**			
Suffix	AA						
Details	Carbon composite tube made by fillament wirring						

ItemOrder	Material	Use	UnitCost	Size1	Unit1	Size2	Unit2	Area Name	Area	Length	Density	Quantity	Sub Total
10	Carbon Fiber, 1 Ply	Stock	$ 200.00	8	mm	6	mm	Tube	8.79646E-05	0.357	2 000.00	1	$ 12.56
20	Aramid (Kevlar) Fiber, 1 Ply	Stock	$ 150.00	8	mm	30	% Area	Tube	0.005383433	0.001	2 000.00	1	$ 0.81
												Sub Total	**$ 13.37**

ItemOrder	Process	Use	UnitCost	Unit	Quantity	Multiplier	Mult. Val.	Sub Total
10	Lamination, Fillament Wirring	Tube Lamination	$ 25.00	kg	0.06819015			$ 1.70
							Sub Total	**$ 1.70**

University	Ecole Centrale de Lyon			**Car #**	81	**Part Cost**	1.66
System	Steering System	**FileLink1**				**Qty**	4.00
Assembly	Tie Rod Assembly	**FileLink2**		**FileLink1**			
Part	Upright Tapered Spacer	**FileLink3**		**FileLink2**		**Extended Cost**	$ 6.63
P/N Base	ST 04002			**FileLink3**			
Suffix	AA						
Details							

ItemOrder	Material	Use	UnitCost	Size1	Unit1	Size2	Unit2	Area Name	Area	Length	Density	Quantity	Sub Total
10	Aluminium, normal (per kg)	Stock	$ 4.20	7	mm			Radius	0.000154	0.004	2 710.00	1	$ 0.01
												Sub Total	**$ 0.01**

ItemOrder	Process	Use	UnitCost	Unit	Quantity	Multiplier	Mult. Val.	Sub Total
10	Machining Setup, Install and remove	Setup for machining and removal	$ 1.30	unit	1			$ 1.30
20	Machining	Material removal - side view profile	$ 0.04	cm^3	0.033		1	$ 0.00
30	Drilled hole	Hole for assembly	$ 0.35		1			$ 0.35
							Sub Total	**$ 1.65**

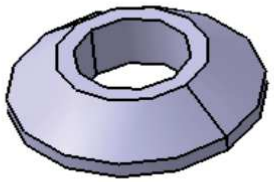

University	Ecole Centrale de Lyon			**Car #**	81	**Part Cost**	1.66
System	Steering System	**FileLink1**				**Qty**	4.00
Assembly	Tie Rod Assembly	**FileLink2**		**FileLink1**			
Part	Rack Tapered Spacer	**FileLink3**		**FileLink2**		**Extended Cost**	$ 6.63
P/N Base	ST 04003			**FileLink3**			
Suffix	AA						
Details							

ItemOrder	Material	Use	UnitCost	Size1	Unit1	Size2	Unit2	Area Name	Area	Length	Density	Quantity	Sub Total
10	Aluminium, normal (per kg)	Stock	$ 4.20	7	mm			Radius	1.54E-04	0.004	2 710.00	1	$ 0.01
												Sub Total	**$ 0.01**

ItemOrder	Process	Use	UnitCost	Unit	Quantity	Multiplier	Mult. Val.	Sub Total
10	Machining Setup, Install and remove	Setup for machining and removal	$ 1.30	unit	1			$ 1.30
20	Machining	Material removal - side view profile	$ 0.04	cm^3	0.023		1	$ 0.00
30	Drilled hole	Hole for assembly	$ 0.35		1			$ 0.35
							Sub Total	**$ 1.65**

University	Ecole Centrale de Lyon			**Car #**	81	**Part Cost**	2.95
System	Steering System	**FileLink1**				**Qty**	4.00
Assembly	Tie Rod Assembly	**FileLink2**		**FileLink1**			
Part	Tie Rod Insert	**FileLink3**		**FileLink2**		**Extended Cost**	$ 11.81
P/N Base	ST 04003			**FileLink3**			
Suffix	AA						
Details							

ItemOrder	Material	Use	UnitCost	Size1	Unit1	Size2	Unit2	Area Name	Area	Length	Density	Quantity	Sub Total
10	Steel, Mild (per kg)	Steel for machining the part	$ 2.25	9.5	mm			Radius	0.00028353	20.000	7 860.00	1	$ 1.00
												Sub Total	**$ 1.00**

ItemOrder	Process	Use	UnitCost	Unit	Quantity	Multiplier	Mult. Val.	Sub Total
10	Machining Setup, Install and remove	Setup for machining and removal	$ 1.30	unit	1			$ 1.30
20	Machining	Material removal - side view profile	$ 0.04	cm^3	2.5	Material - Steel	3	$ 0.30
30	Tapping Holes	Rod End emplacement	$ 0.35		1			$ 0.35
							Sub Total	**$ 1.95**

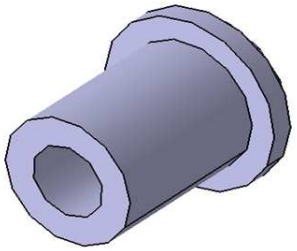

Vue de face
Echelle : 5:1

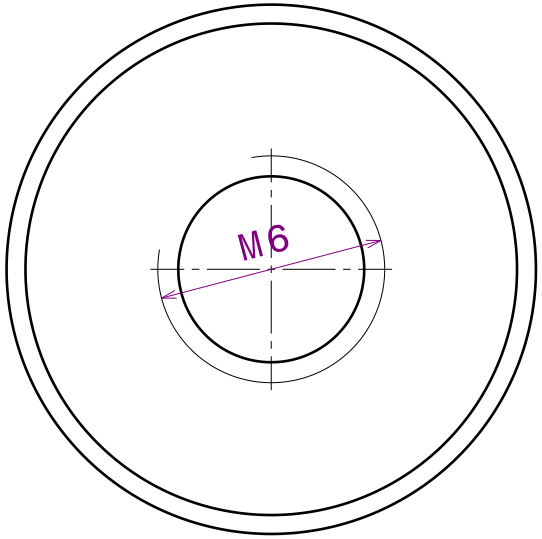

Vue de gauche
Echelle : 5:1

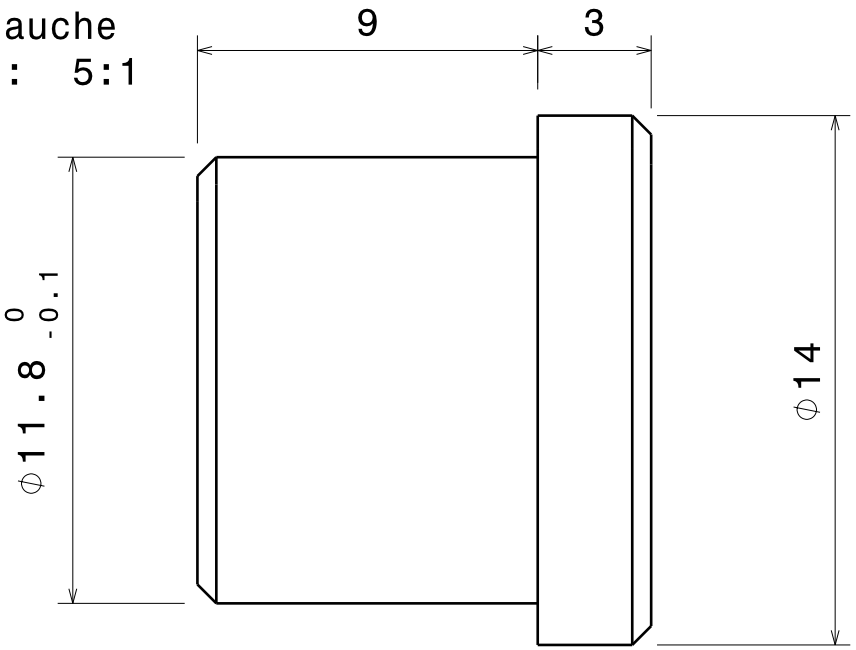

Tolérances générales ISO 2768 - mK

Chanfreins de 0.5mm

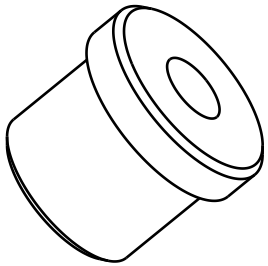

Vue isométrique
Echelle : 2:1

Taille A4		Ecurie Piston Sport Auto
Dessiné par Simon CHARAUDEAU	Date 22/12/2014	Désignation Insert taraudé M6
Coordonnées 06 25 18 15 19 simon.charaudeau@ecl13.ec-lyon.fr		Quantité 8 / Matériau Acier S235 / Version 1.0
Plan vérifié par PMR 366		Echelle 1:1 / Numéro du plan 15-B-026 / Feuille 1/1

ÉCOLE CENTRALE LYON

SUSPENSION & SHOCKS

EPSA TEAM

CAR # 81

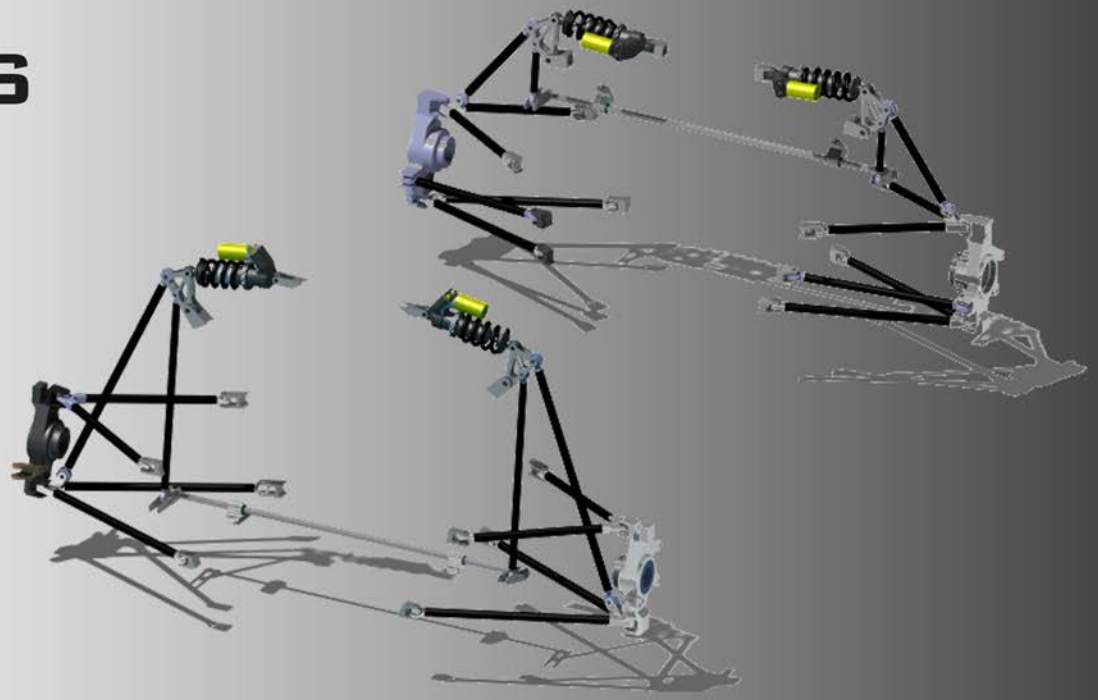

Ecurie Piston Sport Auto

University	Ecole Cenrale de Lyon	**Car #**	81	**Asm Cost**	125,74
System	Suspension			**Qty**	2
Assembly	Lower Front A-Arm	**FileLink1**			
P/N Base	SU A0001	**FileLink2**		**Extended Cost**	$ 251,48
Suffix	AA	**FileLink3**			
Details	Carbon composite A-Arm				

ItemOrder	Part	Part Cost	Quantity	Sub Total
10	Simple Insert	$ 5,16	2	$ 10,31
20	Double Lower Front Insert	$ 29,18	1	$ 29,18
30	Cylinder	$ 0,66	2	$ 1,32
40	Front Lower Front A-Arm tube	$ 13,81	1	$ 13,81
50	Rear Lower Front A-Arm Tube	$ 14,19	1	$ 14,19
60	Spacer	$ 1,67	4	$ 6,66
70	Front Lower Front A-Arm Mount	$ 6,35	1	$ 6,35
80	Rear Lower Front A-Arm Mount	$ 6,45	1	$ 6,45
			Sub Total	**$ 88,27**

ItemOrder	Material	Use	UnitCost	Size1	Unit1	Size2	Unit2	Area Name	Area	Length	Density	Quantity	Sub Total
10	Adhesive	Glue for bearings and tube -Included in Process	$ -									-	$ -
20	Bearing, Spherical	Link to uprights	$ 6,92	8	mm							3,00	$ 20,76
30	Paint	Mounts Painting	$ 10,00	0,01	m²							1,00	0,1
												Sub Total	**$ 20,86**

ItemOrder	Process	Use	UnitCost	Unit	Quantity	Multiplier	Mult. Val.	Sub Total
10	Brush Apply	Glue applying on Double Insert bores	$ 0,02	cm²	2	Repeat 2	2	$ 0,08
20	Assemble, 1kg, loose	Cylinder in Double Insert bores	$ 0,06	unit	1	Repeat 2	2	$ 0,12
30	Brush Apply	Glue applying on simple Insert bores	$ 0,10	cm²	11,3	Repeat 2	2	$ 2,26
40	Assemble, 1kg, loose	Simple Insert in Carbon Tube	$ 0,14	unit	1	Repeat 2	2	$ 0,28
50	Brush Apply	Glue applying on cylinders	$ 0,18	cm²	11,3	Repeat 2	2	$ 4,07
60	Assemble, 1kg, loose	Cylinder in Carbon Tube with Simple Insert	$ 0,22	unit	1	Repeat 2	2	$ 0,44
70	Brush Apply	Glue applying on bearing bores	$ 0,26	cm²	3,7	Repeat 3	3	$ 2,89
80	Assemble, 1kg, loose	Bearing in Insert Bores	$ 0,30	unit	1	Repeat 3	3	$ 0,90
90	Weld	Steel mounts welding	$ 0,15	cm²	22			$ 3,30
100	Aerosol Apply	Steel mounts painting	$ 5,25	m²	0,01			$ 0,05
110	Assemble, 1kg, loose	A-Arm Positionning	$ 0,14	unit	1			$ 0,14
120	Assemble, 1kg, Line on line	Spacers installation	$ 0,13	unit	4			$ 0,52
130	Ratchet <= 25,4mm	M8 bolts installation	$ 0,13	unit	2			$ 0,26
140	Reaction tool <=25,4mm	LM8 nut blocking	$ 0,25	unit	2			$ 0,50
							Sub Total	**$ 15,81**

ItemOrder	Fastener	Use	UnitCost	Size1	Unit1	Size2	Unit2	Quantity	Sub Total
10	Bolt,Grade 12,9 (SAE)	A-Arm Fixing Bolts	$ 0,19	8	mm	30	mm	4	$ 0,76
20	Nut, Grade 8.8 (SAE 5)	A-Arm Fixing Nuts	$ 0,01	8	mm			4	$ 0,04
								Sub Total	**$ 0,80**

ItemOrder	Tooling	Use	UnitCost	Unit	Quantity	PVF	FractionIncluded	Sub Total
10	Welds - Welding Fixture	Welding processes	$ 500,00	point	8	3000	1	$ 1,33
							Sub Total	**$ 1,33**

University	Ecole Centrale de Lyon			**Car #**	81	**Part Cost**	$ 3,86
System	Suspension	**FileLink1**				**Qty**	2
Assembly	Lower Front A-Arm	**FileLink2**		**FileLink1**			
Part	Simple Insert	**FileLink3**		**FileLink2**		**Extended Cost**	$ 7,71
P/N Base	SU 01001			**FileLink3**			
Suffix	AA						
Details							

ItemOrder	Material	Use	UnitCost	Size1	Unit1	Size2	Unit2	Area Name	Area	Length	Density	Quantity	Sub Total
10	Aluminium, Premium (per kg)	Insert	$ 4,20	0,077401	kg			Round area	4,91E-04	0,058	2 720	1,00	$ 0,33
												Sub Total	**$ 0,33**

ItemOrder	Process	Use	UnitCost	Unit	Quantity	Multiplier	Mult. Val.	Sub Total
10	Machining Setup, Install and remove		$ 1,30	unit	1			$ 1,30
20	Machining	Main shape machining	$ 0,04	cm^3	17	Material - Aluminium	1	$ 0,68
30	Machining Setup, Change		$ 0,65	unit	1			$ 0,65
40	Machining	Sides machining	$ 0,04	cm^3	4	Material - Aluminium	1	$ 0,16
50	Machining Setup, Change		$ 0,65	unit	1			$ 0,65
60	Machining	Hole machining	$ 0,04	cm^3	2	Material - Aluminium	1	$ 0,09
							Sub Total	**$ 3,53**

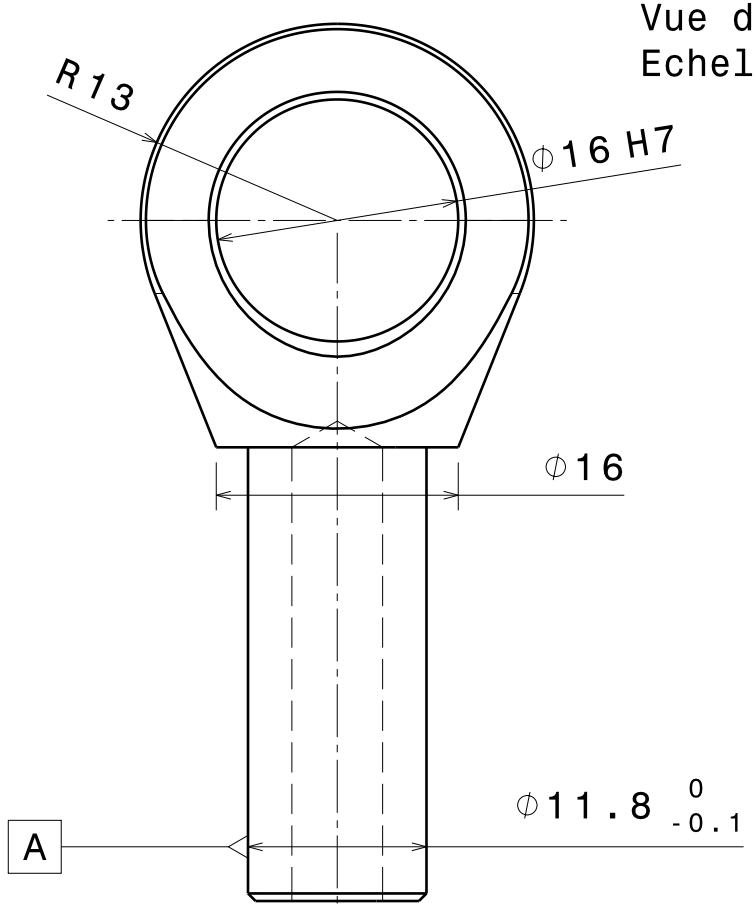

Vue de face
Echelle : 2:1

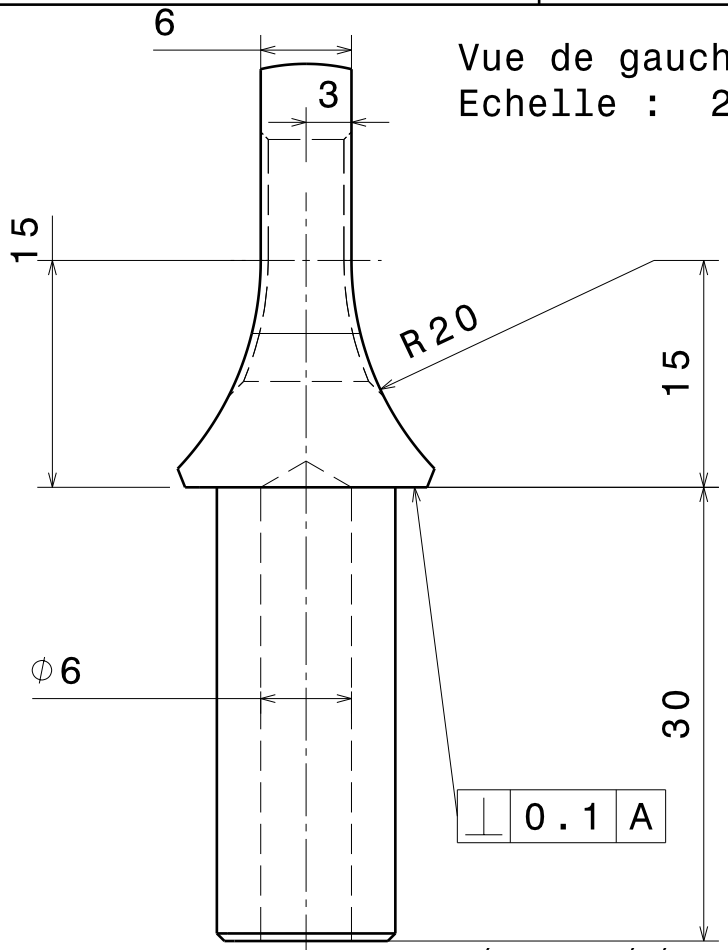

Vue de gauche
Echelle : 2:1

chanfreins de 0.5

Tolérances générales ISO 2768 - mK

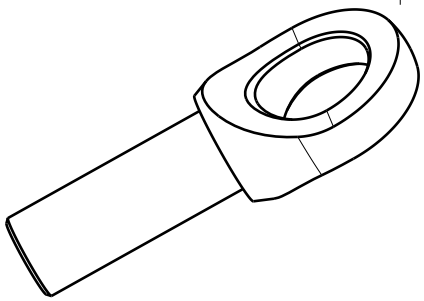

Vue isométrique
Echelle : 1:1

Taille A4		Ecurie Piston Sport Auto
Dessiné par Simon CHARAUDEAU	Date 05/01/2015	Désignation Insert coté chassis
Coordonnées 06 25 18 15 19 simon.charaudeau@ecl13.ec-lyon.fr		
Quantité 16	Matériau Aluminium 2024 T4	Version 1.0
Plan vérifié par PMR 370	Echelle 1:1	Numéro du plan 15-B-019 / Feuille 1/1

University	Ecole Centrale de Lyon			**Car #**	81	**Part Cost**	$ 11,99
System	Suspension	**FileLink1**				**Qty**	2
Assembly	Lower Front A-Arm	**FileLink2**		**FileLink1**			
Part	Insert	**FileLink3**		**FileLink2**		**Extended Cost**	$ 23,98
P/N Base	SU 01002			**FileLink3**			
Suffix	AA						
Details							

ItemOrder	Material	Use	UnitCost	Size1	Unit1	Size2	Unit2	Area Name	Area	Length	Density	Quantity	Sub Total
10	Aluminium, Premium (per kg)	Insert	$ 4,20	0,408	kg			Rectangular area	2,50E-03	0,060	2 720	1,00	$ 1,71
												Sub Total	**$ 1,71**

ItemOrder	Process	Use	UnitCost	Unit	Quantity	Multiplier	Mult. Val.	Sub Total
10	Machining Setup, Install and remove		$ 1,30	unit	1			$ 1,30
20	Machining	Main shape contouring and top of the main hole machining	$ 0,04	cm^3	106	Material - Aluminium	1	$ 4,24
30	Machining Setup, Change		$ 0,65	unit	1			$ 0,65
40	Machining	First tube hole machining	$ 0,04	cm^3	2	Material - Aluminium	1	$ 0,09
50	Machining Setup, Change		$ 0,65	unit	1			$ 0,65
60	Machining	Second tube hole machining	$ 0,04	cm^3	2	Material - Aluminium	1	$ 0,09
70	Machining Setup, Change		$ 0,65	unit	1			$ 0,65
80	Machining	Angle and bottom of the main hole machining	$ 0,04	cm^3	4	Material - Aluminium	1	$ 0,16
90	Machining Setup, Change		$ 0,65	unit	1			$ 0,65
100	Machining	Suspension rod support machining	$ 0,04	cm^3	36	Material - Aluminium	1	$ 1,44
110	Drilled holes < 25.4 mm	Suspension rod support drilling	$ 0,35		1	Material - Aluminium	1	$ 0,35
							Sub Total	**$ 10,27**

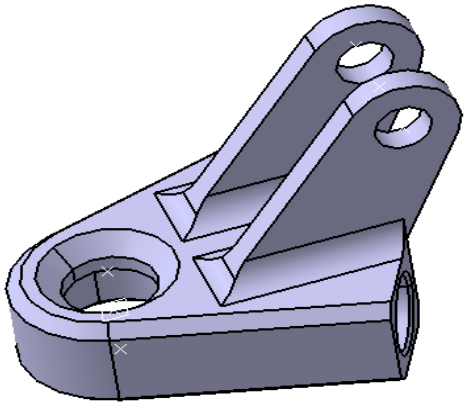

Tolérances générales ISO 2768 - mK chanfreins perçages de 0.5mm chanfreins extérieurs de 2mm congés de 4mm

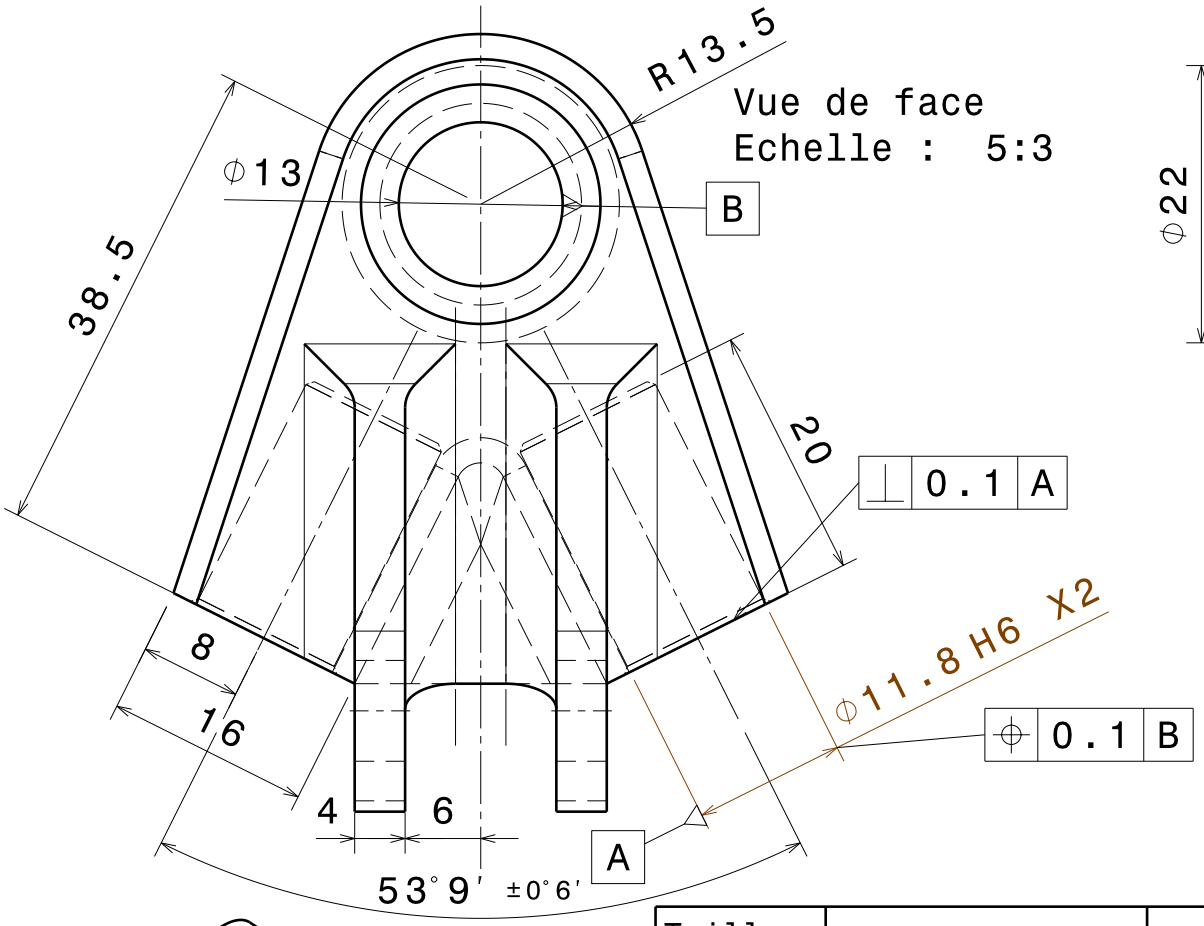

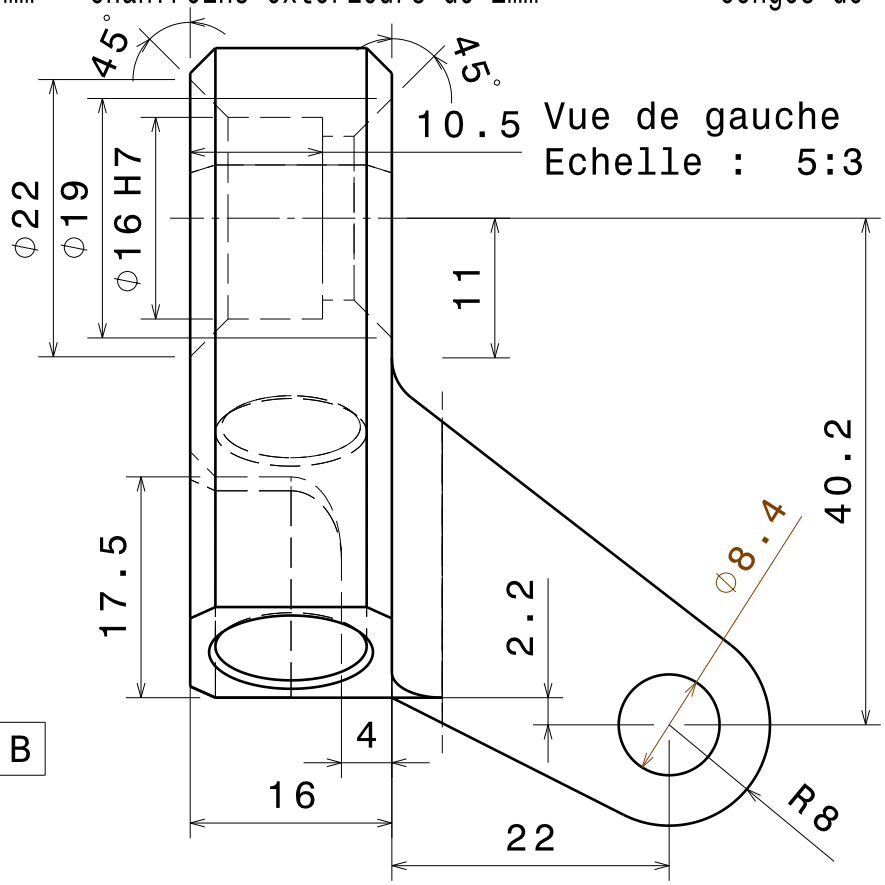

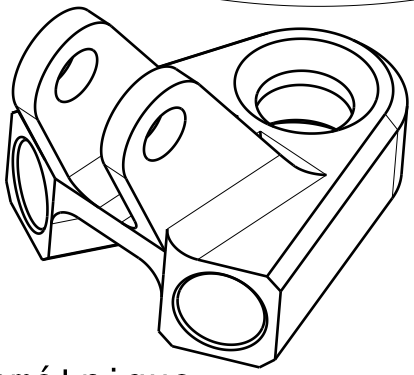

Vue isométrique
Echelle : 1:1

Taille A4		Ecurie Piston Sport Auto
Dessiné par Simon CHARAUDEAU	Date 29/12/2014	Désignation Insert avant inférieur
Coordonnées 06 25 18 15 19 simon.charaudeau@gmail.com		
Plan vérifié par PMR 372		

Quantité	Matériau	Version
2	Aluminium 7075 T6	1.0
Echelle 1:1	Numéro du plan 15-B-021	Feuille 1/1

University	Ecole Centrale de Lyon			**Car #**	81	**Part Cost**	$ 0,66
System	Suspension	**FileLink1**				**Qty**	2
Assembly	Lower Front A-Arm	**FileLink2**		**FileLink1**			
Part	Cylinder	**FileLink3**		**FileLink2**		**Extended Cost**	$ 1,32
P/N Base	SU 01003			**FileLink3**			
Suffix	AA						
Details	Déscription brève de la pièce						

ItemOrder	Material	Use	UnitCost	Size1	Unit1	Size2	Unit2	Area Name	Area	Length	Density	Quantity	Sub Total
10	Aluminium, Premium (per kg)	cylinder	$ 4,20	0,06149376	kg			Round area	4,52E-04	0,050	2 720	1,00	$ 0,26
												Sub Total	**$ 0,26**

ItemOrder	Process	Use	UnitCost	Unit	Quantity	Multiplier	Mult. Val.	Sub Total
10	Saw or tubing cut		$ 0,40	cm	1			$ 0,40
							Sub Total	**$ 0,40**

University	Ecole Centrale de Lyon			**Car #**	81	**Part Cost**	$ 13,81
System	Suspension	**FileLink1**				**Qty**	1
Assembly	Lower Front A-Arm	**FileLink2**		**FileLink1**			
Part	Front Lower Front A-Arm Carbon Tube	**FileLink3**		**FileLink2**		**Extended Cost**	$ 13,81
P/N Base	SU 01004			**FileLink3**			
Suffix	AA						
Details							

ItemOrder	Material	Use	UnitCost	Size1	Unit1	Size2	Unit2	Area Name	Area	Length	Density	Quantity	Sub Total
10	Carbon Fiber, 1 Ply	Stock	$ 200,00	8	mm	6	mm	Tube	8,80E-05	0,327	2 000,00	1	$ 11,51
20	Aramid (Kevlar) Fiber, 1 Ply	Stock	$ 150,00	8	mm	30	% Area	Tube	4,93E-03	0,001	2 000,00	1	$ 0,74
												Sub Total	**$ 12,25**

ItemOrder	Process	Use	UnitCost	Unit	Quantity	Multiplier	Mult. Val.	Sub Total
10	Lamination, Fillament Wirring	Tube Lamination	$ 25,00	kg	0,06245989			$ 1,56
							Sub Total	**$ 1,56**

University	Ecole Centrale de Lyon			**Car #**	81	**Part Cost**	$ 14,19
System	Suspension	**FileLink1**				**Qty**	1
Assembly	Lower Front A-Arm	**FileLink2**		**FileLink1**			
Part	Rear Lower Front A-Arm Carbon Tube	**FileLink3**		**FileLink2**		**Extended Cost**	$ 14,19
P/N Base	SU 01005			**FileLink3**			
Suffix	AA						
Details							

ItemOrder	Material	Use	UnitCost	Size1	Unit1	Size2	Unit2	Area Name	Area	Length	Density	Quantity	Sub Total
10	Carbon Fiber, 1 Ply	Stock	$ 200,00	8	mm	6	mm	Tube	8,80E-05	0,336	2 000,00	1	$ 11,82
20	Aramid (Kevlar) Fiber, 1 Ply	Stock	$ 150,00	8	mm	30	% Area	Tube	5,07E-03	0,001	2 000,00	1	$ 0,76
												Sub Total	**$ 12,58**

ItemOrder	Process	Use	UnitCost	Unit	Quantity	Multiplier	Mult. Val.	Sub Total
10	Lamination, Fillament Wirring	Tube Lamination	$ 25,00	kg	0,06417897			$ 1,60
							Sub Total	**$ 1,60**

University	Ecole Centrale de Lyon			**Car #**	81	**Part Cost**	$ 1,67
System	Suspension	**FileLink1**				**Qty**	4
Assembly	Lower Front A-Arm	**FileLink2**		**FileLink1**			
Part	Spacer	**FileLink3**		**FileLink2**		**Extended Cost**	$ 6,66
P/N Base	SU 01006			**FileLink3**			
Suffix	AA						
Details							

ItemOrder	Material	Use	UnitCost	Size1	Unit1	Size2	Unit2	Area Name	Area	Length	Density	Quantity	Sub Total
10	Aluminium, normal (per kg)		$ 4,20	14	mm			Round 14mm	1,54E-04	0,004	2 710,00	1	$ 0,01
												Sub Total	**$ 0,01**

ItemOrder	Process	Use	UnitCost	Unit	Quantity	Multiplier	Mult. Val.	Sub Total
10	Machining Setup, Install and remove	Setup for machining	$ 1,30	unit	1			$ 1,30
20	Machining	Material removal	$ 0,04	cm^3	0,23	Material - Aluminiu	1	$ 0,01
30	Drilled holes <25,4mm dia.	Holes for assembly	$ 0,35	hole	1			$ 0,35
							Sub Total	**$ 1,66**

University	Ecole Centrale de Lyon			**Car #**	81	**Part Cost**	$ 6,35
System	Suspension	**FileLink1**				**Qty**	1
Assembly	Lower Front A-Arm	**FileLink2**		**FileLink1**			
Part	Front Lower Front A-Arm Mount	**FileLink3**		**FileLink2**		**Extended Cost**	$ 6,35
P/N Base	SU 01007			**FileLink3**			
Suffix	AA						
Details	Left and right mounts are symetrical : Same manufacturing procedure						

ItemOrder	Material	Use	UnitCost	Size1	Unit1	Size2	Unit2	Area Name	Area	Length	Density	Quantity	Sub Total
10	Steel, Mild	Stock material	$ 2,25	25	mm	25	mm	Rectangular 25*25mm	6,25E-04	0,039	7 860,00	1	$ 0,43
												Sub Total	**$ 0,43**

ItemOrder	Process	Use	UnitCost	Unit	Quantity	Multiplier	Mult. Val.	Sub Total
10	Machining Setup, Install and remove	Setup for machining	$ 1,30	unit	1			$ 1,30
20	Machining	Material removal	$ 0,04	cm^3	14,2	Material -Steel	3	$ 1,70
30	Drilled holes <25,4mm dia.	Holes for assembly	$ 0,35	hole	1			$ 0,35
40	Machining setup change		$ 0,65	unit	1			$ 0,65
50	Machining	Central groove	$ 0,04	cm^3	9,3	Material -Steel	3	$ 1,12
60	Machining setup change		$ 0,65	unit	1			$ 0,65
70	Machining	Angle	$ 0,04	cm^3	1,2	Material -Steel	3	$ 0,14
							Sub Total	**$ 5,91**

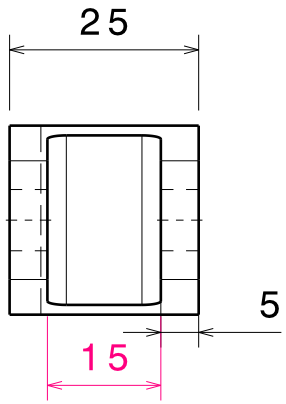

Vue de dessous
Echelle : 1:1

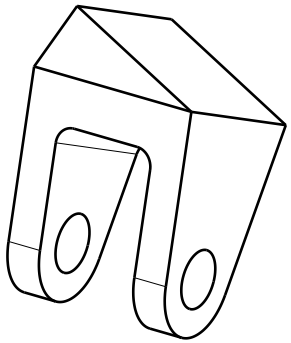

Vue isométrique
Echelle : 1:1

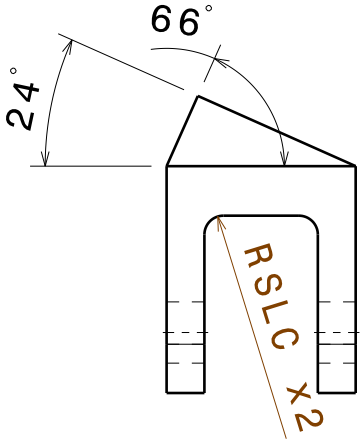

Brut: 38.3*25*25

R SLC= 1mm<R<3mm

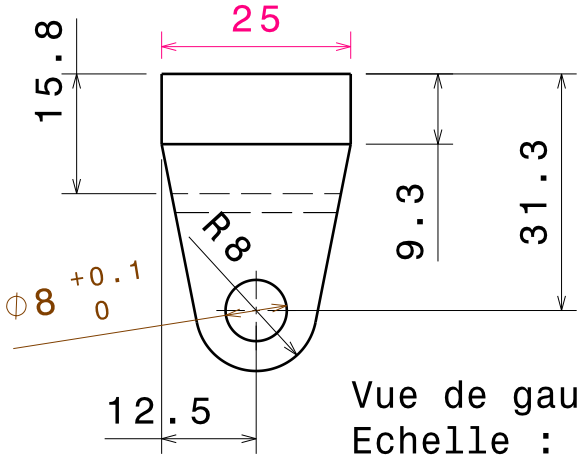

Vue de gauche
Echelle : 1:1

Vue de face
Echelle : 1:1

Tolérances générales
ISO 2768 mK

Taille A4		Ecurie Piston Sport Auto
Dessiné par Pierre Merlier	Date 26/11/2014	Désignation Chape triangle LAS-g-av-inf-av
Coordonnées 06 34 50 32 42 pierre.merlier@ecl13.ec-lyon.fr		Quantité 1+1 / Matériau Acier S235 / Version 1.0
Plan vérifié par CCN 378		Echelle 1:1 / Numéro du plan 15-B-033 / Feuille 1/1

University	Ecole Centrale de Lyon			**Car #**	81	**Part Cost**	$ 6,45
System	Suspension	**FileLink1**				**Qty**	1
Assembly	Lower Front A-Arm	**FileLink2**		**FileLink1**			
Part	Rear Lower Front A-Arm Mount	**FileLink3**		**FileLink2**		**Extended Cost**	$ 6,45
P/N Base	SU 01008			**FileLink3**			
Suffix	AA						
Details	Left and right mounts are symetrical : Same manufacturing procedure						

ItemOrder	Material	Use	UnitCost	Size1	Unit1	Size2	Unit2	Area Name	Area	Length	Density	Quantity	Sub Total
10	Steel, Mild	Stock material	$ 2,25	25	mm	25	mm	Rectangular 25*25mm	6,25E-04	0,039	7 860,00	1	$ 0,43
												Sub Total	**$ 0,43**

ItemOrder	Process	Use	UnitCost	Unit	Quantity	Multiplier	Mult. Val.	Sub Total
10	Machining Setup, Install and remove	Setup for machining	$ 1,30	unit	1			$ 1,30
20	Machining	Material removal	$ 0,04	cm^3	15,1	Material -Steel	3	$ 1,81
30	Drilled holes <25,4mm dia.	Holes for assembly	$ 0,35	hole	1			$ 0,35
40	Machining setup change		$ 0,65	unit	1			$ 0,65
50	Machining	Central groove	$ 0,04	cm^3	9,3	Material -Steel	3	$ 1,12
60	Machining setup change		$ 0,65	unit	1			$ 0,65
70	Machining	Tubing cavity	$ 0,04	cm^3	1,2	Material -Steel	3	$ 0,14
							Sub Total	**$ 6,02**

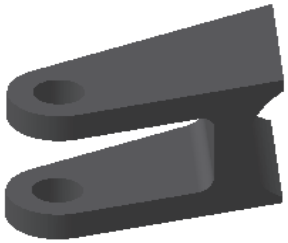

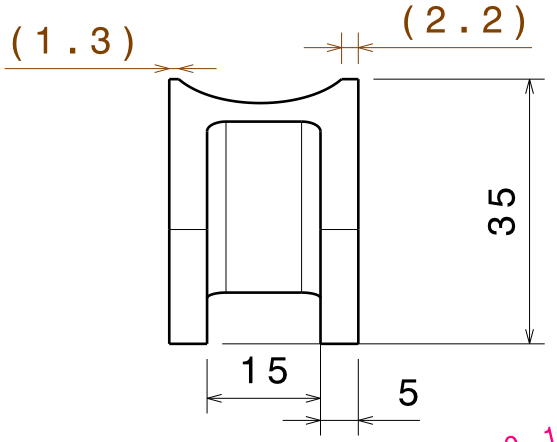

Vue de dessous
Echelle : 1:1

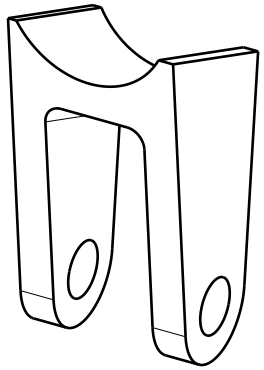

Vue isométrique
Echelle : 1:1

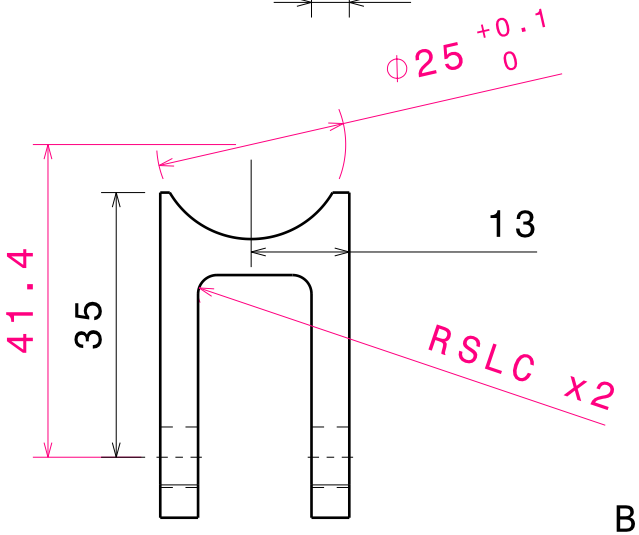

Vue de face
Echelle : 1:1

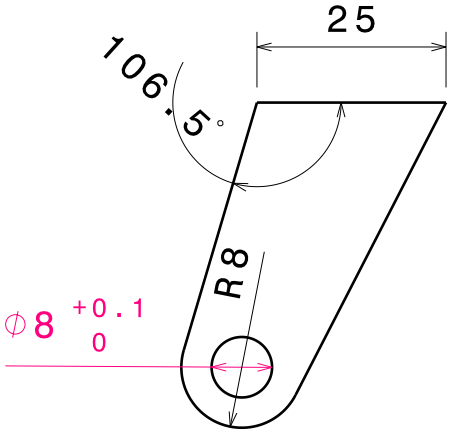

Vue de gauche
Echelle : 1:1

Brut 25*25*38

R SLC=1mm<R<3mm

Tolérances générales
ISO 2768 mK

Taille A4		Ecurie Piston Sport Auto
Dessiné par Pierre Merlier	Date 26/11/2014	Désignation: Chape triangle LAS g-av-inf-arr.
Coordonnées 06 34 50 32 42 pierre.merlier@ecl13.ec-lyon.fr		Quantité 1+1 / Matériau Acier S235 / Version 1.0
Plan vérifié par CCN 380		Echelle 1:1 / Numéro du plan 15-B-034 / Feuille 1/1

University	Ecole Cenrale de Lyon	**Car #**	81	**Asm Cost**	94,94
System	Suspension			**Qty**	2
Assembly	Upper Front A-Arm	**FileLink1**			
P/N Base	SU A0002	**FileLink2**		**Extended Cost**	$ 189,89
Suffix	AA	**FileLink3**			
Details	Carbon composite A-Arm				

ItemOrder	Part	Part Cost	Quantity	Sub Total
10	Simple Insert	$ 5,16	2	$ 10,31
20	Double Upper Front Insert	$ 5,36	1	$ 5,36
30	Cylinder	$ 0,66	2	$ 1,32
40	Front Upper Front A-Arm tube	$ 9,88	1	$ 9,88
50	Rear Upper Front A-Arm Tube	$ 10,09	1	$ 10,09
60	Spacer	$ 1,67	4	$ 6,66
70	Front Upper Front A-Arm Mount	$ 6,47	1	$ 6,47
80	Rear Upper Front A-Arm Mount	$ 6,45	1	$ 6,45
			Sub Total	**$ 56,54**

ItemOrder	Material	Use	UnitCost	Size1	Unit1	Size2	Unit2	Area Name	Area	Length	Density	Quantity	Sub Total
10	Adhesive	Glue for bearings and tube -Included in Process	$ -									-	$ -
20	Bearing, Spherical	Link to uprights	$ 6,92	8	mm							3,00	$ 20,76
30	Paint	Mounts Painting	$ 10,00	0,01	m²							1,00	0,1
												Sub Total	**$ 20,86**

ItemOrder	Process	Use	UnitCost	Unit	Quantity	Multiplier	Mult. Val.	Sub Total
10	Brush Apply	Glue applying on Double Insert bores	$ 0,02	cm²	2	Repeat 2	2	$ 0,08
20	Assemble, 1kg, loose	Cylinder in Double Insert bores	$ 0,06	unit	1	Repeat 2	2	$ 0,12
30	Brush Apply	Glue applying on simple Insert bores	$ 0,10	cm²	11,3	Repeat 2	2	$ 2,26
40	Assemble, 1kg, loose	Simple Insert in Carbon Tube	$ 0,14	unit	1	Repeat 2	2	$ 0,28
50	Brush Apply	Glue applying on cylinders	$ 0,18	cm²	11,3	Repeat 2	2	$ 4,07
60	Assemble, 1kg, loose	Cylinder in Carbon Tube with Simple Insert	$ 0,22	unit	1	Repeat 2	2	$ 0,44
70	Brush Apply	Glue applying on bearing bores	$ 0,26	cm²	3,7	Repeat 3	3	$ 2,89
80	Assemble, 1kg, loose	Bearing in Insert Bores	$ 0,30	unit	1	Repeat 3	3	$ 0,90
90	Weld	Steel mounts welding	$ 0,15	cm	22			$ 3,30
100	Aerosol Apply	Steel mounts painting	$ 5,25	m²	0,01			$ 0,05
110	Assemble, 1kg, loose	A-Arm Positionning	$ 0,14	unit	1			$ 0,14
120	Assemble, 1kg, Line on line	Spacers installation	$ 0,13	unit	4			$ 0,52
130	Ratchet <= 25,4mm	M8 bolts installation	$ 0,13	unit	2			$ 0,26
140	Reaction tool <=25,4mm	LM8 nut blocking	$ 0,25	unit	2			$ 0,50
							Sub Total	**$ 15,81**

ItemOrder	Fastener	Use	UnitCost	Size1	Unit1	Size2	Unit2	Quantity	Sub Total
10	Bolt,Grade 12,9 (SAE)	A-Arm Fixing Bolts	$ 0,19	8	mm	30	mm	2	$ 0,38
30	Nut, Grade 8.8 (SAE 5)	A-Arm Fixing Nuts	$ 0,01	8	mm			2	$ 0,02
								Sub Total	**$ 0,40**

ItemOrder	Tooling	Use	UnitCost	Unit	Quantity	PVF	FractionIncluded	Sub Total
10	Welds - Welding Fixture	Welding processes	$ 500,00	point	8	3000	1	$ 1,33
							Sub Total	**$ 1,33**

University	Ecole Centrale de Lyon			**Car #**	81	**Part Cost**	$ 3,86
System	Suspension	**FileLink1**				**Qty**	2
Assembly	Upper Front A-Arm	**FileLink2**		**FileLink1**			
Part	Simple Insert	**FileLink3**		**FileLink2**		**Extended Cost**	$ 7,71
P/N Base	SU 02001			**FileLink3**			
Suffix	AA						
Details							

ItemOrder	Material	Use	UnitCost	Size1	Unit1	Size2	Unit2	Area Name	Area	Length	Density	Quantity	Sub Total
10	Aluminium, Premium (per kg)	Insert	$ 4,20	0,077401	kg			Round area	4,91E-04	0,058	2 720	1,00	$ 0,33
												Sub Total	**$ 0,33**

ItemOrder	Process	Use	UnitCost	Unit	Quantity	Multiplier	Mult. Val.	Sub Total
10	Machining Setup, Install and remove		$ 1,30	unit	1			$ 1,30
20	Machining	Main shape machining	$ 0,04	cm^3	17	Material - Aluminium	1	$ 0,68
30	Machining Setup, Change		$ 0,65	unit	1			$ 0,65
40	Machining	Sides machining	$ 0,04	cm^3	4	Material - Aluminium	1	$ 0,16
50	Machining Setup, Change		$ 0,65	unit	1			$ 0,65
60	Machining	Hole machining	$ 0,04	cm^3	2	Material - Aluminium	1	$ 0,09
							Sub Total	**$ 3,53**

Vue de face
Echelle : 2:1

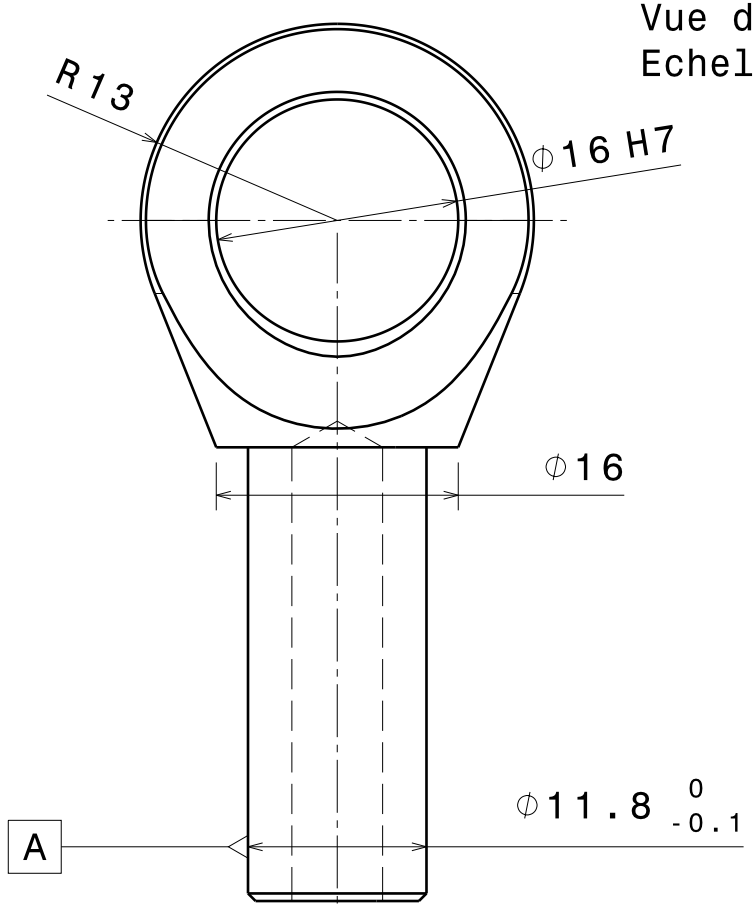

Vue de gauche
Echelle : 2:1

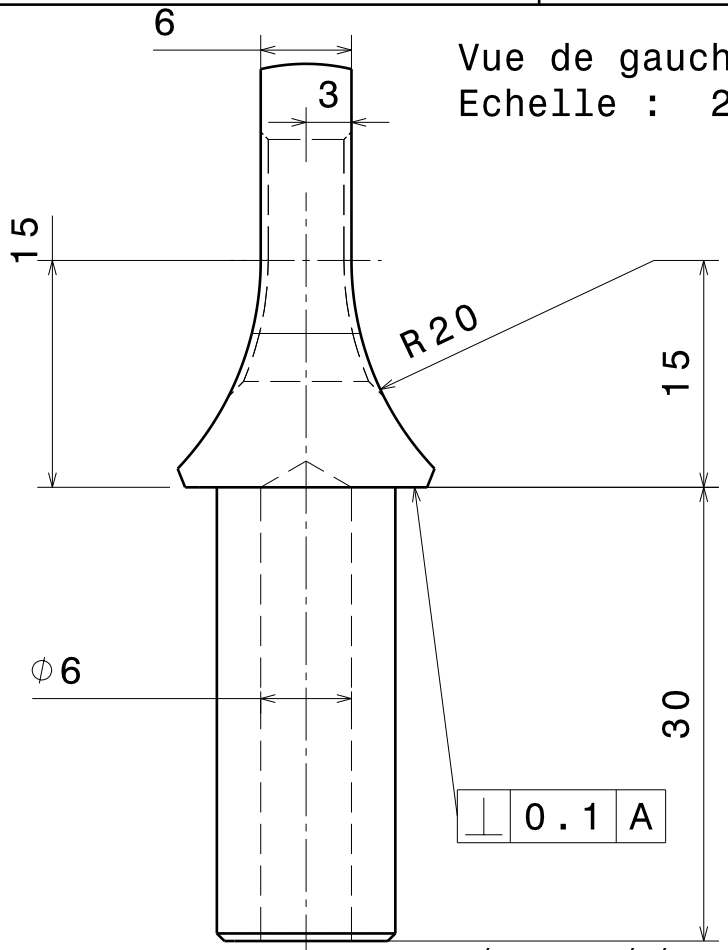

chanfreins de 0.5

Tolérances générales ISO 2768 - mK

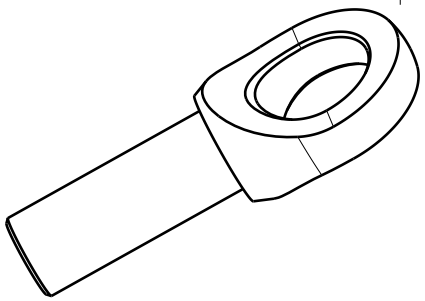

Vue isométrique
Echelle : 1:1

Taille A4		Ecurie Piston Sport Auto
Dessiné par Simon CHARAUDEAU	Date 05/01/2015	Désignation Insert coté chassis
Coordonnées 06 25 18 15 19 simon.charaudeau@ecl13.ec-lyon.fr		Quantité 16 / Matériau Aluminium 2024 T4 / Version 1.0
Plan vérifié par PMR 383		Echelle 1:1 / Numéro du plan 15-B-019 / Feuille 1/1

University	Ecole Centrale de Lyon			**Car #**	81	**Part Cost**	$ 5,36
System	Suspension	**FileLink1**				**Qty**	2
Assembly	Upper Front A-Arm	**FileLink2**		**FileLink1**			
Part	Upper Front Double Insert	**FileLink3**		**FileLink2**		**Extended Cost**	$ 10,73
P/N Base	SU 02002			**FileLink3**			
Suffix	AA						
Details							

ItemOrder	Material	Use	UnitCost	Size1	Unit1	Size2	Unit2	Area Name	Area	Length	Density	Quantity	Sub Total
10	Aluminium, Premium (per kg)	Insert	$ 4,20	0,1357824	kg			Rectangular area	3,12E-03	0,016	2 720	1,00	$ 0,57
												Sub Total	**$ 0,57**

ItemOrder	Process	Use	UnitCost	Unit	Quantity	Multiplier	Mult. Val.	Sub Total
10	Machining Setup, Install and remove		$ 1,30	unit	1			$ 1,30
20	Machining	Main shape contouring and top side machining	$ 0,04	cm^3	28	Material - Aluminium	1	$ 1,12
30	Machining Setup, Change		$ 0,65	unit	1			$ 0,65
40	Machining	First tube hole machining	$ 0,04	cm^3	2	Material - Aluminium	1	$ 0,09
50	Machining Setup, Change		$ 0,65	unit	1			$ 0,65
60	Machining	Second tube hole machining	$ 0,04	cm^3	2	Material - Aluminium	1	$ 0,09
70	Machining Setup, Change		$ 0,65	unit	1			$ 0,65
80	Machining	Bottom side and hole machining	$ 0,04	cm^3	6	Material - Aluminium	1	$ 0,24
							Sub Total	**$ 4,79**

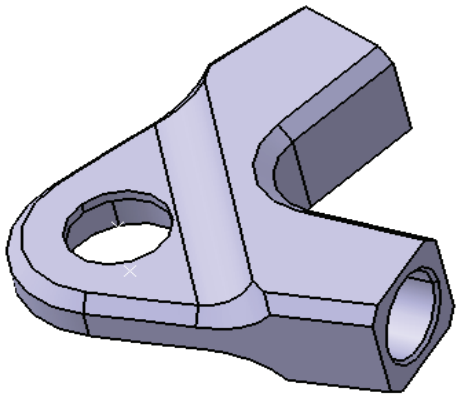

Vue de face
Echelle : 2:1

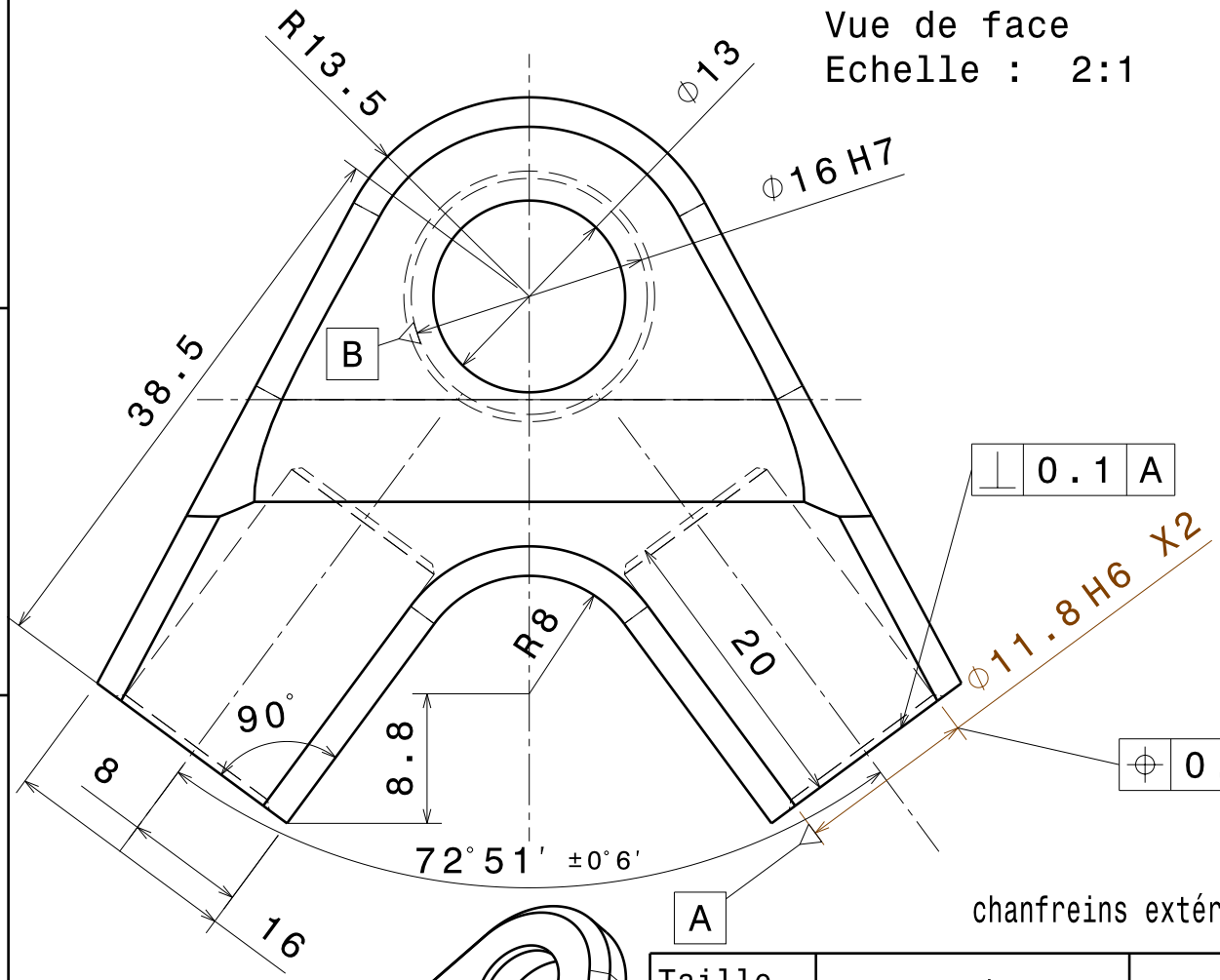

Vue de gauche
Echelle : 2:1

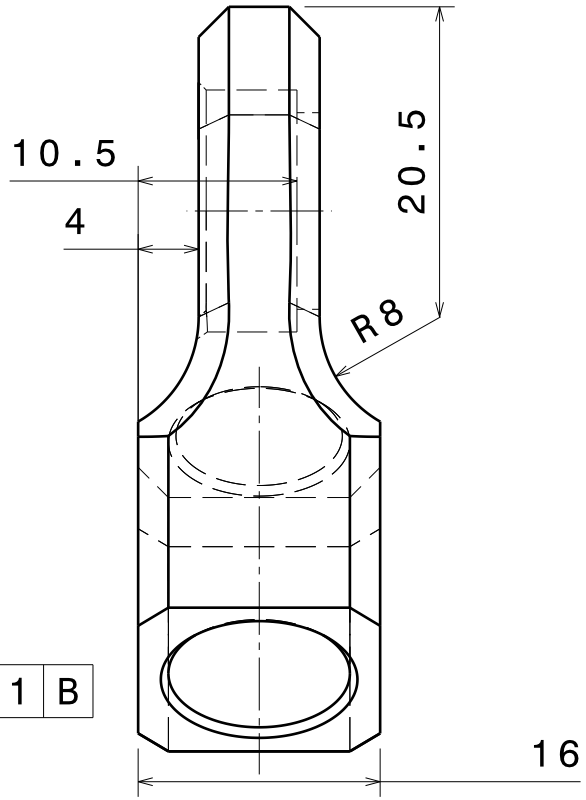

chanfreins extérieurs de 2mm

chanfreins perçages de 0.5mm

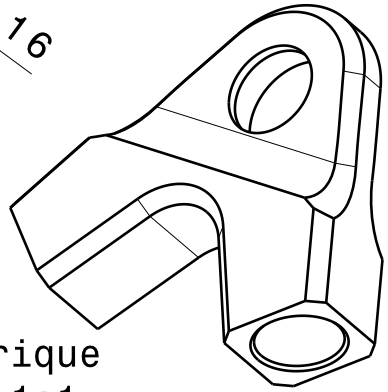

Vue isométrique
Echelle : 1:1

Tolérances générales ISO 2768 - mK

Taille A4		Ecurie Piston Sport Auto
Dessiné par Simon CHARAUDEAU	Date 29/12/2014	Désignation: Insert avant supérieur
Coordonnées 06 25 18 15 19 simon.charaudeau@ecl13.ec-lyon.fr		Quantité 2 / Matériau Aluminium 2024 T4 / Version 1.0
Plan vérifié par PMR 385		Echelle 1:1 / Numéro du plan 15-B-022 / Feuille 1/1

University	Ecole Centrale de Lyon			**Car #**	81	**Part Cost**	$ 0,66
System	Suspension	**FileLink1**				**Qty**	2
Assembly	Upper Front A-Arm	**FileLink2**		**FileLink1**			
Part	Cylinder	**FileLink3**		**FileLink2**		**Extended Cost**	$ 1,32
P/N Base	SU 02003			**FileLink3**			
Suffix	AA						
Details							

ItemOrder	Material	Use	UnitCost	Size1	Unit1	Size2	Unit2	Area Name	Area	Length	Density	Quantity	Sub Total
10	Aluminium, Premium (per kg)	cylinder	$ 4,20	0,06149376	kg			Round area	4,52E-04	0,050	2 720	1,00	$ 0,26
												Sub Total	**$ 0,26**

ItemOrder	Process	Use	UnitCost	Unit	Quantity	Multiplier	Mult. Val.	Sub Total
10	Saw or tubing cut		$ 0,40	cm	1			$ 0,40
							Sub Total	**$ 0,40**

University	Ecole Centrale de Lyon			**Car #**	81	**Part Cost**	$ 9,88
System	Suspension	**FileLink1**				**Qty**	1
Assembly	Upper Front A-Arm	**FileLink2**		**FileLink1**			
Part	Front Upper Front A-Arm Carbon Tube	**FileLink3**		**FileLink2**		**Extended Cost**	$ 9,88
P/N Base	SU 02004			**FileLink3**			
Suffix	AA						
Details							

ItemOrder	Material	Use	UnitCost	Size1	Unit1	Size2	Unit2	Area Name	Area	Length	Density	Quantity	Sub Total
10	Carbon Fiber, 1 Ply	Stock	$ 200,00	8	mm	6	mm	Tube	8,80E-05	0,234	2 000,00	1	$ 8,23
20	Aramid (Kevlar) Fiber, 1 Ply	Stock	$ 150,00	8	mm	30	% Area	Tube	3,53E-03	0,001	2 000,00	1	$ 0,53
												Sub Total	**$ 8,76**

ItemOrder	Process	Use	UnitCost	Unit	Quantity	Multiplier	Mult. Val.	Sub Total
10	Lamination, Fillament Wirring	Tube Lamination	$ 25,00	kg	0,04469607			$ 1,12
							Sub Total	**$ 1,12**

University	Ecole Centrale de Lyon			**Car #**	81	**Part Cost**	$ 10,09
System	Suspension	**FileLink1**				**Qty**	1
Assembly	Upper Front A-Arm	**FileLink2**		**FileLink1**			
Part	Rear Upper Front A-Arm Carbon Tube	**FileLink3**		**FileLink2**		**Extended Cost**	$ 10,09
P/N Base	SU 02005			**FileLink3**			
Suffix	AA						
Details							

ItemOrder	Material	Use	UnitCost	Size1	Unit1	Size2	Unit2	Area Name	Area	Length	Density	Quantity	Sub Total
10	Carbon Fiber, 1 Ply	Stock	$ 200,00	8	mm	6	mm	Tube	8,80E-05	0,239	2 000,00	1	$ 8,41
20	Aramid (Kevlar) Fiber, 1 Ply	Stock	$ 150,00	8	mm	30	% Area	Tube	3,60E-03	0,001	2 000,00	1	$ 0,54
												Sub Total	**$ 8,95**

ItemOrder	Process	Use	UnitCost	Unit	Quantity	Multiplier	Mult. Val.	Sub Total
10	Lamination, Fillament Wirring	Tube Lamination	$ 25,00	kg	0,04565111			$ 1,14
							Sub Total	**$ 1,14**

University	Ecole Centrale de Lyon			**Car #**	81	**Part Cost**	$ 1,67
System	Suspension	**FileLink1**				**Qty**	4
Assembly	Upper Front A-Arm	**FileLink2**		**FileLink1**			
Part	Spacer	**FileLink3**		**FileLink2**		**Extended Cost**	$ 6,66
P/N Base	SU 02006			**FileLink3**			
Suffix	AA						
Details							

ItemOrder	Material	Use	UnitCost	Size1	Unit1	Size2	Unit2	Area Name	Area	Length	Density	Quantity	Sub Total
10	Aluminium, normal (per kg)		$ 4,20	14	mm			Round 14mm	1,54E-04	0,004	2 710,00	1	$ 0,01
												Sub Total	**$ 0,01**

ItemOrder	Process	Use	UnitCost	Unit	Quantity	Multiplier	Mult. Val.	Sub Total
10	Machining Setup, Install and remove	Setup for machining	$ 1,30	unit	1			$ 1,30
20	Machining	Material removal	$ 0,04	cm^3	0,23	Material - Aluminiu	1	$ 0,01
30	Drilled holes <25,4mm dia.	Holes for assembly	$ 0,35	hole	1			$ 0,35
							Sub Total	**$ 1,66**

University	Ecole Centrale de Lyon			**Car #**	81	**Part Cost**	$ 6,47
System	Suspension	**FileLink1**				**Qty**	1
Assembly	Upper Front A-Arm	**FileLink2**		**FileLink1**			
Part	Front Upper Front A-Arm Mount	**FileLink3**		**FileLink2**		**Extended Cost**	$ 6,47
P/N Base	SU 02007			**FileLink3**			
Suffix	AA						
Details	Left and right mounts are symetrical : Same manufacturing procedure						

ItemOrder	Material	Use	UnitCost	Size1	Unit1	Size2	Unit2	Area Name	Area	Length	Density	Quantity	Sub Total
10	Steel, Mild	Stock material	$ 2,25	25	mm	25	mm	Rectangular 25*25mm	6,25E-04	0,039	7 860,00	1	$ 0,43
												Sub Total	**$ 0,43**

ItemOrder	Process	Use	UnitCost	Unit	Quantity	Multiplier	Mult. Val.	Sub Total
10	Machining Setup, Install and remove	Setup for machining	$ 1,30	unit	1			$ 1,30
20	Machining	Material removal	$ 0,04	cm^3	15,2	Material -Steel	3	$ 1,82
30	Drilled holes <25,4mm dia.	Holes for assembly	$ 0,35	hole	1			$ 0,35
40	Machining setup change		$ 0,65	unit	1			$ 0,65
50	Machining	Central groove	$ 0,04	cm^3	9,3	Material -Steel	3	$ 1,12
60	Machining setup change		$ 0,65	unit	1			$ 0,65
70	Machining	Angle	$ 0,04	cm^3	1,2	Material -Steel	3	$ 0,14
							Sub Total	**$ 6,03**

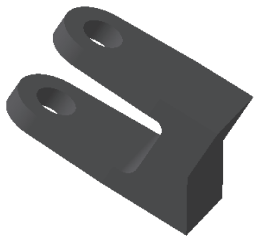

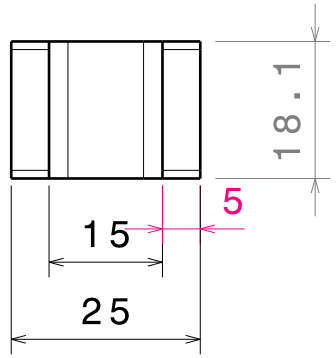

Vue de dessous
Echelle : 1:1

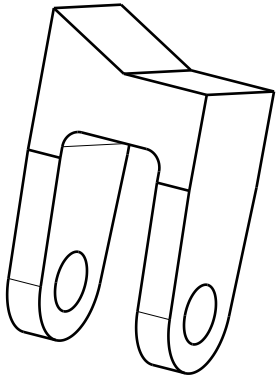

Vue isométrique
Echelle : 1:1

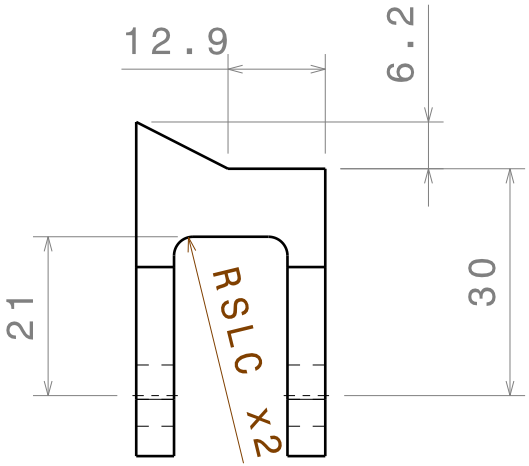

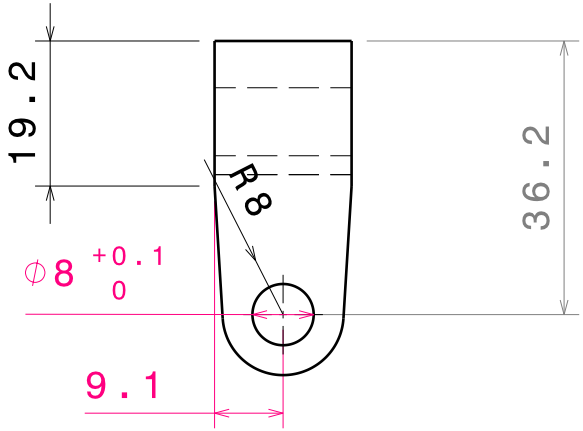

Vue de gauche
Echelle : 1:1

Brut
44.2*25*18.1

Vue de face
Echelle : 1:1

R SLC = 1mm<R<3mm

Tolérances générales
ISO 2768 mK

Taille A4		Ecurie Piston Sport Auto
Dessiné par Pierre Merlier	Date 26/11/2014	Désignation Chape triangle las av. sup. av
Coordonnées 06 34 50 32 42 pierre.merlier@ecl13.ec-lyon.fr		Quantité 1+1 / Matériau Acier S235 / Version 1.0
Plan vérifié par CCN 391		Echelle 1:1 / Numéro du plan 15-B-027 / Feuille 1/1

University	Ecole Centrale de Lyon			**Car #**	81	**Part Cost**	$ 6,45
System	Suspension	**FileLink1**				**Qty**	1
Assembly	Upper Front A-Arm	**FileLink2**		**FileLink1**			
Part	Rear Upper Front A-Arm Mount	**FileLink3**		**FileLink2**		**Extended Cost**	$ 6,45
P/N Base	SU 02008			**FileLink3**			
Suffix	AA						
Details	Left and right mounts are symetrical : Same manufacturing procedure						

ItemOrder	Material	Use	UnitCost	Size1	Unit1	Size2	Unit2	Area Name	Area	Length	Density	Quantity	Sub Total
10	Steel, Mild	Stock material	$ 2,25	25	mm	25	mm	Rectangular 25*25mm	6,25E-04	0,039	7 860,00	1	$ 0,43
												Sub Total	**$ 0,43**

ItemOrder	Process	Use	UnitCost	Unit	Quantity	Multiplier	Mult. Val.	Sub Total
10	Machining Setup, Install and remove	Setup for machining	$ 1,30	unit	1			$ 1,30
20	Machining	Material removal	$ 0,04	cm^3	15,1	Material -Steel	3	$ 1,81
30	Drilled holes <25,4mm dia.	Holes for assembly	$ 0,35	hole	1			$ 0,35
40	Machining setup change		$ 0,65	unit	1			$ 0,65
50	Machining	Central groove	$ 0,04	cm^3	9,3	Material -Steel	3	$ 1,12
60	Machining setup change		$ 0,65	unit	1			$ 0,65
70	Machining	Tubing cavity	$ 0,04	cm^3	1,2	Material -Steel	3	$ 0,14
							Sub Total	**$ 6,02**

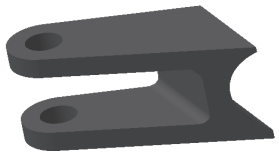

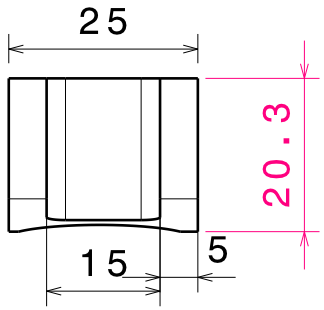

Vue de dessous
Echelle : 1:1

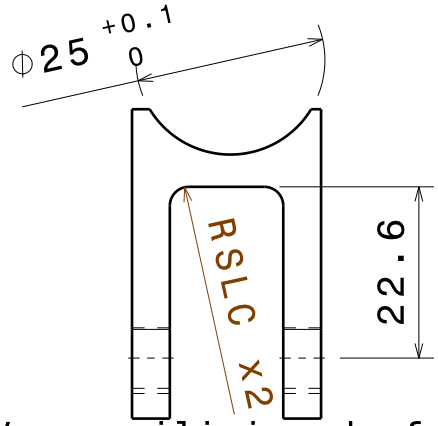

Vue auxiliaire de face
Echelle : 1:1

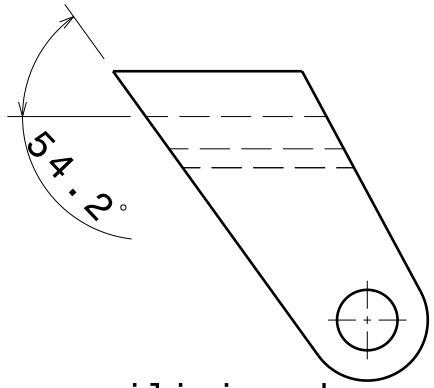

Vue auxiliaire de gauche
Echelle : 1:1

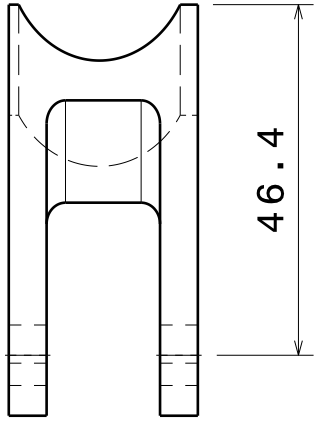

Vue de face
Echelle : 1:1

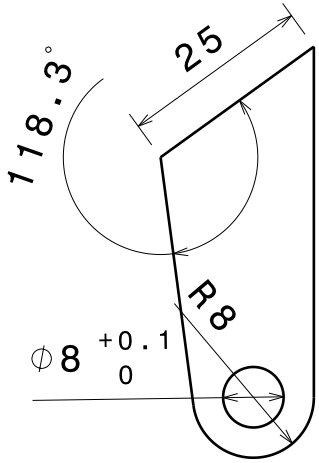

Vue de gauche
Echelle : 1:1

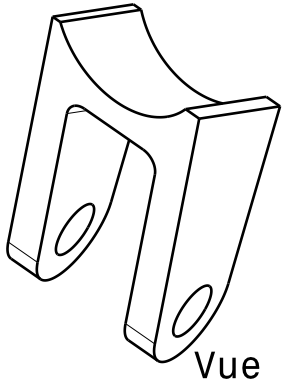

Vue isométrique

Brut 25*20.3*54.4

R SLC=1mm<R<3mm

Taille A4		Ecurie Piston Sport Auto
Dessiné par Pierre Merlier	Date 26/11/2014	Désignation Chape triangle LAS av-sup-ar
Coordonnées 06 34 50 32 42 pierre.merlier@ecl13.ec-lyon.fr		Quantité 1+1 / Matériau Acier S235 / Version 1.0
Plan vérifié par CCN 393		Echelle 1:1 / Numéro du plan 15-B-028 / Feuille 1/1

University	Ecole Cenrale de Lyon	**Car #**	81	**Asm Cost**	90,33
System	Suspension			**Qty**	2
Assembly	Lower Rear A-Arm	**FileLink1**			
P/N Base	SU A0003	**FileLink2**		**Extended Cost**	$ 180,65
Suffix	AA	**FileLink3**			
Details	Carbon composite A-Arm				

ItemOrder	Part	Part Cost	Quantity	Sub Total
10	Simple Insert	$ 5,16	2	$ 10,31
20	Double Lower Rear Insert	$ 6,82	1	$ 6,82
30	Cylinder	$ 0,66	2	$ 1,32
40	Front Lower Rear A-Arm tube	$ 9,12	1	$ 9,12
50	Rear Lower Rear A-Arm Tube	$ 11,82	1	$ 11,82
60	Spacer	$ 1,67	4	$ 6,66
70	Front Lower RearA-Arm Mount	$ 6,33	1	
80	Rear Lower Rear A-Arm Mount	$ 6,33	1	$ 6,33
			Sub Total	**$ 52,39**

ItemOrder	Material	Use	UnitCost	Size1	Unit1	Size2	Unit2	Area Name	Area	Length	Density	Quantity	Sub Total
10	Adhesive	Glue for bearings and tube -Included in Process	$ -									-	$ -
20	Bearing, Spherical	Link to uprights	$ 6,92	8	mm							3,00	$ 20,76
30	Paint	Mounts Painting	$ 10,00	0,01	m²							1,00	0,1
												Sub Total	**$ 20,86**

ItemOrder	Process	Use	UnitCost	Unit	Quantity	Multiplier	Mult. Val.	Sub Total
10	Brush Apply	Glue applying on Double Insert bores	$ 0,02	cm²	2	Repeat 2	2	$ 0,08
20	Assemble, 1kg, loose	Cylinder in Double Insert bores	$ 0,06	unit	1	Repeat 2	2	$ 0,12
30	Brush Apply	Glue applying on simple Insert bores	$ 0,10	cm²	11,3	Repeat 2	2	$ 2,26
40	Assemble, 1kg, loose	Simple Insert in Carbon Tube	$ 0,14	unit	1	Repeat 2	2	$ 0,28
50	Brush Apply	Glue applying on cylinders	$ 0,18	cm²	11,3	Repeat 2	2	$ 4,07
60	Assemble, 1kg, loose	Cylinder in Carbon Tube with Simple Insert	$ 0,22	unit	1	Repeat 2	2	$ 0,44
70	Brush Apply	Glue applying on bearing bores	$ 0,26	cm²	3,7	Repeat 3	3	$ 2,89
80	Assemble, 1kg, loose	Bearing in Insert Bores	$ 0,30	unit	1	Repeat 3	3	$ 0,90
90	Weld	Steel mounts welding	$ 0,15	cm	22			$ 3,30
100	Aerosol Apply	Steel mounts painting	$ 5,25	m²	0,1			$ 0,53
110	Assemble, 1kg, loose	A-Arm Positionning	$ 0,14	unit	1			$ 0,14
120	Assemble, 1kg, Line on line	Spacers installation	$ 0,13	unit	4			$ 0,52
130	Ratchet <= 25,4mm	M8 bolts installation	$ 0,13	unit	2			$ 0,26
140	Reaction tool <=25,4mm	LM8 nut blocking	$ 0,25	unit	2			$ 0,50
							Sub Total	**$ 16,28**

ItemOrder	Fastener	Use	UnitCost	Size1	Unit1	Size2	Unit2	Quantity	Sub Total
10	Bolt,Grade 12,9 (SAE)	A-Arm Fixing Bolts	$ 0,19	8	mm	30	mm	4	$ 0,76
30	Nut, Grade 8.8 (SAE 5)	A-Arm Fixing Nuts	$ 0,01	8	mm			4	$ 0,04
								Sub Total	**$ 0,80**

ItemOrder	Tooling	Use	UnitCost	Unit	Quantity	PVF	FractionIncluded	Sub Total
10	Welds - Welding Fixture	Welding processes	$ 500,00	point	8	3000	1	$ 1,33
							Sub Total	**$ 1,33**

University	Ecole Centrale de Lyon			**Car #**	81	**Part Cost**	$ 3,86
System	Suspension	**FileLink1**				**Qty**	2
Assembly	Lower Rear A-Arm	**FileLink2**		**FileLink1**			
Part	Simple Insert	**FileLink3**		**FileLink2**		**Extended Cost**	$ 7,71
P/N Base	SU 03001			**FileLink3**			
Suffix	AA						
Details							

ItemOrder	Material	Use	UnitCost	Size1	Unit1	Size2	Unit2	Area Name	Area	Length	Density	Quantity	Sub Total
10	Aluminium, Premium (per kg)	Insert	$ 4,20	0,077401	kg			Round area	4,91E-04	0,058	2 720	1,00	$ 0,33
												Sub Total	**$ 0,33**

ItemOrder	Process	Use	UnitCost	Unit	Quantity	Multiplier	Mult. Val.	Sub Total
10	Machining Setup, Install and remove		$ 1,30	unit	1			$ 1,30
20	Machining	Main shape machining	$ 0,04	cm^3	17	Material - Aluminium	1	$ 0,68
30	Machining Setup, Change		$ 0,65	unit	1			$ 0,65
40	Machining	Sides machining	$ 0,04	cm^3	4	Material - Aluminium	1	$ 0,16
50	Machining Setup, Change		$ 0,65	unit	1			$ 0,65
60	Machining	Hole machining	$ 0,04	cm^3	2	Material - Aluminium	1	$ 0,09
							Sub Total	**$ 3,53**

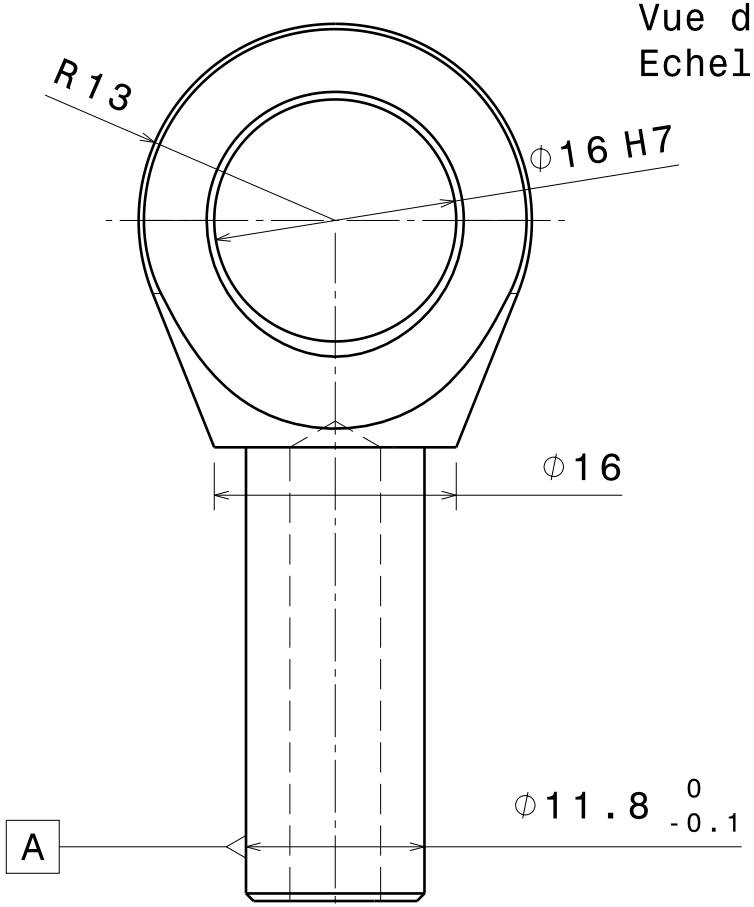

Vue de face
Echelle : 2:1

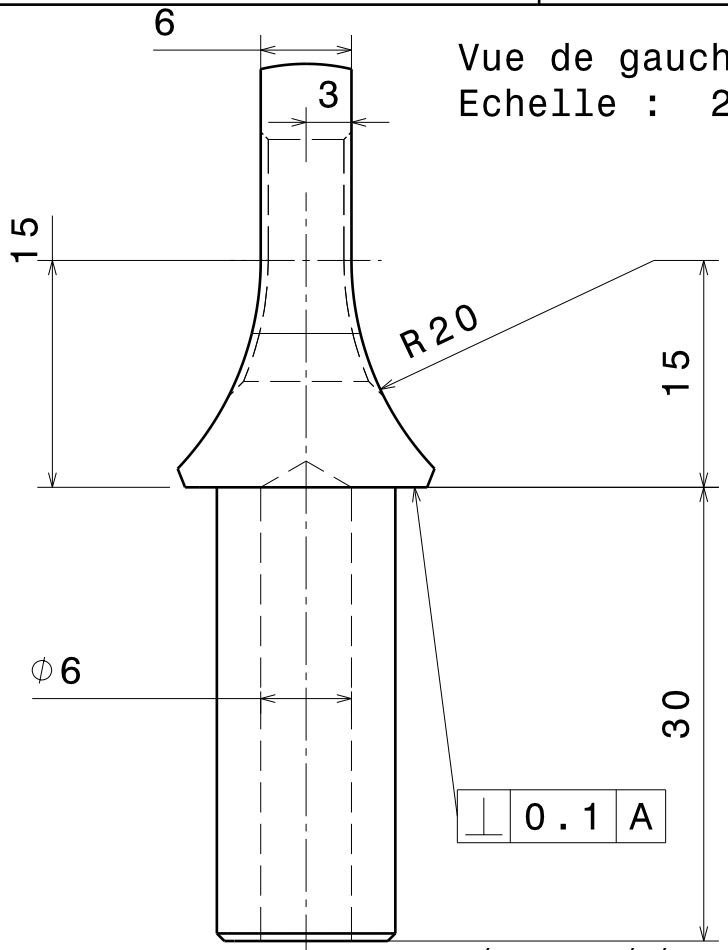

Vue de gauche
Echelle : 2:1

chanfreins de 0.5

Tolérances générales ISO 2768 - mK

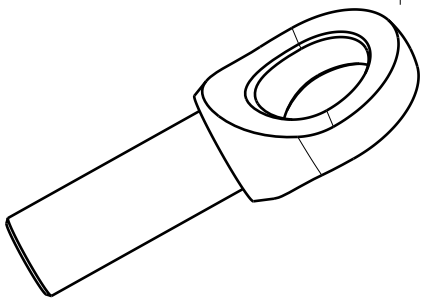

Vue isométrique
Echelle : 1:1

Taille A4		Ecurie Piston Sport Auto
Dessiné par Simon CHARAUDEAU	Date 05/01/2015	Désignation Insert coté chassis
Coordonnées 06 25 18 15 19 simon.charaudeau@ecl13.ec-lyon.fr		
Quantité 16	Matériau Aluminium 2024 T4	Version 1.0
Plan vérifié par PMR 396	Echelle 1:1	Numéro du plan 15-B-019 / Feuille 1/1

University	Ecole Centrale de Lyon			**Car #**	81	**Part Cost**	$ 6,82
System	Suspension	**FileLink1**				**Qty**	2
Assembly	Lower Rear A-Arm	**FileLink2**		**FileLink1**			
Part	Insert	**FileLink3**		**FileLink2**		**Extended Cost**	$ 13,64
P/N Base	SU 03002			**FileLink3**			
Suffix	AA						
Details							

ItemOrder	Material	Use	UnitCost	Size1	Unit1	Size2	Unit2	Area Name	Area	Length	Density	Quantity	Sub Total
10	Aluminium, Premium (per kg)	Insert	$ 4,20	0,113152	kg			Rectangular area	2,60E-03	0,016	2 720	1,00	$ 0,48
												Sub Total	**$ 0,48**

ItemOrder	Process	Use	UnitCost	Unit	Quantity	Multiplier	Mult. Val.	Sub Total
10	Machining Setup, Install and remove		$ 1,30	unit	1			$ 1,30
20	Machining	Main shape contouring and top side machining	$ 0,04	cm^3	19	Material - Aluminium	1	$ 0,76
30	Machining Setup, Install and remove		$ 1,30	unit	1			$ 1,30
40	Machining	First tube hole machining	$ 0,04	cm^3	2	Material - Aluminium	1	$ 0,09
50	Machining Setup, Install and remove		$ 1,30	unit	1			$ 1,30
60	Machining	Second tube hole machining	$ 0,04	cm^3	2	Material - Aluminium	1	$ 0,09
70	Machining Setup, Install and remove		$ 1,30	unit	1			$ 1,30
80	Machining	Bottom side and hole machining	$ 0,04	cm^3	5	Material - Aluminium	1	$ 0,20
							Sub Total	**$ 6,34**

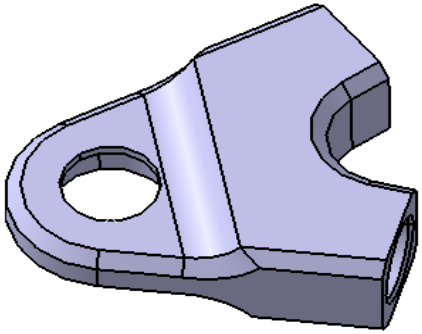

Vue de face
Echelle : 2:1

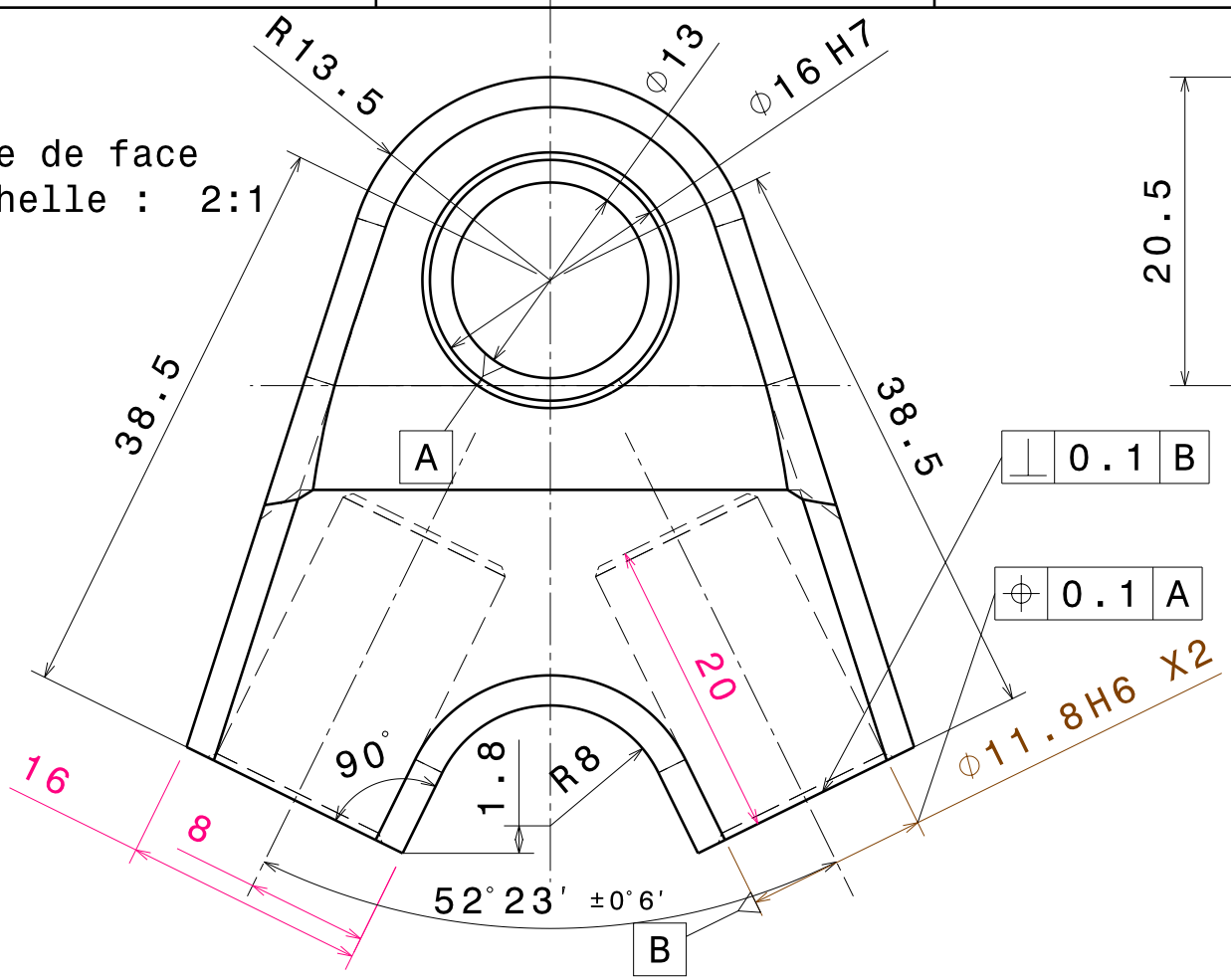

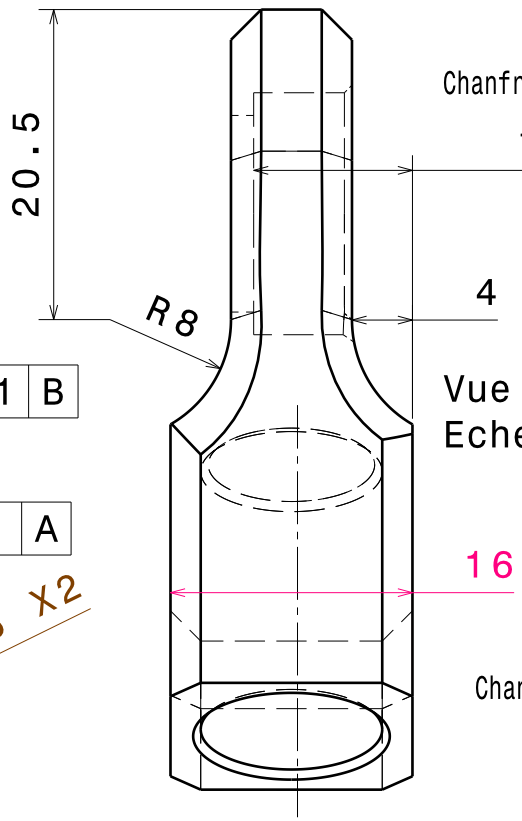

Chanfreins perçages de 0.5

10.5

Vue de gauche
Echelle : 2:1

Chanfreins extérieurs de 2

Tolérances générales ISO 2768 - mK

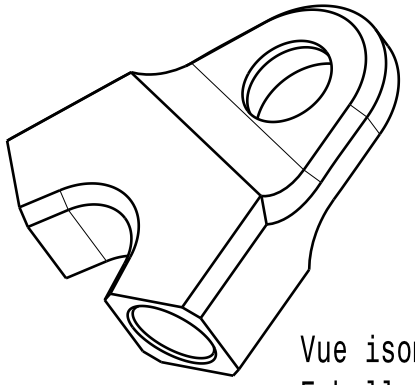

Vue isométrique
Echelle : 1:1

Taille A4		Ecurie Piston Sport Auto
Dessiné par Simon CHARAUDEAU	Date 16/12/2014	Désignation Insert arrière inférieur
Coordonnées 06 25 18 15 19 simon.charaudeau@ecl13.ec-lyon.fr		
Plan vérifié par PMR 398		Quantité 2 / Matériau Aluminium 2024 T4 / Version 1.0
		Echelle 2:1 / Numéro du plan 15-B-023 / Feuille 1/1

University	Ecole Centrale de Lyon			**Car #**	81	**Part Cost**	$ 0,66
System	Suspension	**FileLink1**				**Qty**	2
Assembly	Lower Rear A-Arm	**FileLink2**		**FileLink1**			
Part	Cylinder	**FileLink3**		**FileLink2**		**Extended Cost**	$ 1,32
P/N Base	SU 03003			**FileLink3**			
Suffix	AA						
Details							

ItemOrder	Material	Use	UnitCost	Size1	Unit1	Size2	Unit2	Area Name	Area	Length	Density	Quantity	Sub Total
10	Aluminium, Premium (per kg)	cylinder	$ 4,20	0,06149376	kg			Round area	4,52E-04	0,050	2 720	1,00	$ 0,26
												Sub Total	**$ 0,26**

ItemOrder	Process	Use	UnitCost	Unit	Quantity	Multiplier	Mult. Val.	Sub Total
10	Saw or tubing cut		$ 0,40	cm	1			$ 0,40
							Sub Total	**$ 0,40**

University	Ecole Centrale de Lyon			**Car #**	81	**Part Cost**	$ 9,12
System	Suspension	**FileLink1**				**Qty**	1
Assembly	Lower Rear A-Arm	**FileLink2**		**FileLink1**			
Part	Front Lower Rear A-Arm Carbon Tube	**FileLink3**		**FileLink2**		**Extended Cost**	$ 9,12
P/N Base	SU 03004			**FileLink3**			
Suffix	AA						
Details							

ItemOrder	Material	Use	UnitCost	Size1	Unit1	Size2	Unit2	Area Name	Area	Length	Density	Quantity	Sub Total
10	Carbon Fiber, 1 Ply	Stock	$ 200,00	8	mm	6	mm	Tube	8,80E-05	0,216	2 000,00	1	$ 7,60
20	Aramid (Kevlar) Fiber, 1 Ply	Stock	$ 150,00	8	mm	30	% Area	Tube	3,26E-03	0,001	2 000,00	1	$ 0,49
												Sub Total	**$ 8,09**

ItemOrder	Process	Use	UnitCost	Unit	Quantity	Multiplier	Mult. Val.	Sub Total
10	Lamination, Fillament Wirring	Tube Lamination	$ 25,00	kg	0,04125791			$ 1,03
							Sub Total	**$ 1,03**

University	Ecole Centrale de Lyon			**Car #**	81	**Part Cost**	$ 11,82
System	Suspension	**FileLink1**				**Qty**	1
Assembly	Lower Rear A-Arm	**FileLink2**		**FileLink1**			
Part	Rear Lower Rear A-Arm Carbon Tube	**FileLink3**		**FileLink2**		**Extended Cost**	$ 11,82
P/N Base	SU 03005			**FileLink3**			
Suffix	AA						
Details							

ItemOrder	Material	Use	UnitCost	Size1	Unit1	Size2	Unit2	Area Name	Area	Length	Density	Quantity	Sub Total
10	Carbon Fiber, 1 Ply	Stock	$ 200,00	8	mm	6	mm	Tube	8,80E-05	0,280	2 000,00	1	$ 9,85
20	Aramid (Kevlar) Fiber, 1 Ply	Stock	$ 150,00	8	mm	30	% Area	Tube	4,22E-03	0,001	2 000,00	1	$ 0,63
												Sub Total	**$ 10,49**

ItemOrder	Process	Use	UnitCost	Unit	Quantity	Multiplier	Mult. Val.	Sub Total
10	Lamination, Fillament Wirring	Tube Lamination	$ 25,00	kg	0,05348247			$ 1,34
							Sub Total	**$ 1,34**

University	Ecole Centrale de Lyon			**Car #**	81	**Part Cost**	$ 1,67
System	Suspension	**FileLink1**				**Qty**	4
Assembly	Lower Rear A-Arm	**FileLink2**		**FileLink1**			
Part	Spacer	**FileLink3**		**FileLink2**		**Extended Cost**	$ 6,66
P/N Base	SU 03006			**FileLink3**			
Suffix	AA						
Details							

ItemOrder	Material	Use	UnitCost	Size1	Unit1	Size2	Unit2	Area Name	Area	Length	Density	Quantity	Sub Total
10	Aluminium, normal (per kg)		$ 4,20	14	mm			Round 14mm	1,54E-04	0,004	2 710,00	1	$ 0,01
												Sub Total	**$ 0,01**

ItemOrder	Process	Use	UnitCost	Unit	Quantity	Multiplier	Mult. Val.	Sub Total
10	Machining Setup, Install and remove	Setup for machining	$ 1,30	unit	1			$ 1,30
20	Machining	Material removal	$ 0,04	cm^3	0,23	Material - Aluminiu	1	$ 0,01
30	Drilled holes <25,4mm dia.	Holes for assembly	$ 0,35	hole	1			$ 0,35
							Sub Total	**$ 1,66**

University	Ecole Centrale de Lyon			**Car #**	81	**Part Cost**	$ 6,33
System	Suspension	**FileLink1**				**Qty**	2
Assembly	Lower Rear A-Arm	**FileLink2**		**FileLink1**			
Part	Front Lower RearA-Arm Mount	**FileLink3**		**FileLink2**		**Extended Cost**	$ 12,67
P/N Base	SU 03007			**FileLink3**			
Suffix	AA						
Details	Left and right mounts are symetrical : Same manufacturing procedure						

ItemOrder	Material	Use	UnitCost	Size1	Unit1	Size2	Unit2	Area Name	Area	Length	Density	Quantity	Sub Total
10	Steel, Mild	Stock material	$ 2,25	25	mm	25	mm	Rectangular 25*25mm	6,25E-04	0,039	7 860,00	1	$ 0,43
												Sub Total	**$ 0,43**

ItemOrder	Process	Use	UnitCost	Unit	Quantity	Multiplier	Mult. Val.	Sub Total
10	Machining Setup, Install and remove	Setup for machining	$ 1,30	unit	1			$ 1,30
20	Machining	Material removal	$ 0,04	cm^3	14,6	Material -Steel	3	$ 1,75
30	Drilled holes <25,4mm dia.	Holes for assembly	$ 0,35	hole	1			$ 0,35
40	Machining setup change		$ 0,65	unit	1			$ 0,65
50	Machining	Central groove	$ 0,04	cm^3	9,3	Material -Steel	3	$ 1,12
60	Machining setup change		$ 0,65	unit	1			$ 0,65
70	Machining	Tube cavity	$ 0,04	cm^3	0,7	Material -Steel	3	$ 0,08
							Sub Total	**$ 5,90**

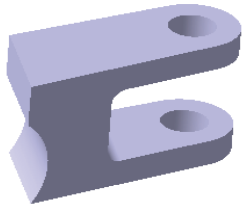

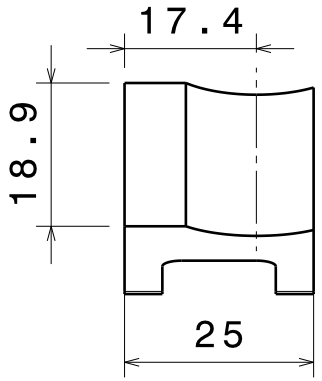

Vue de dessous
Echelle : 1:1

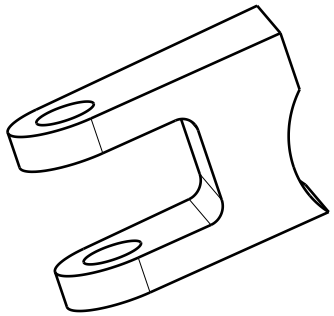

Vue isométrique
Echelle : 1:1

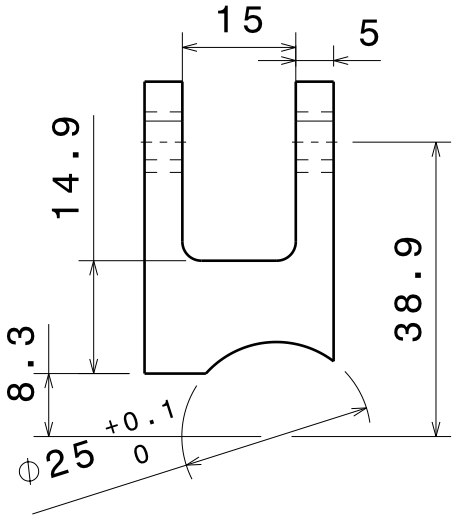

Vue de face
Echelle : 1:1

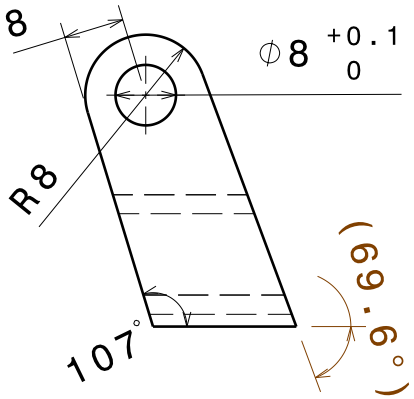

Vue de gauche
Echelle : 1:1

Brut 46.9*23*18.9

Tolérances générales
ISO 2768 mK

R SLC= 1mm<R<3mm

Taille A4		Ecurie Piston Sport Auto
Dessiné par Pierre Merlier	Date 26/11/2014	Désignation Chape LAS g. arr. inf. av.
Coordonnées 06 34 50 32 42 pierre.merlier@ecl13.ec-lyon.fr		Quantité 1+1 / Matériau Acier S235 / Version 1.0
Plan vérifié par CCN 404		Echelle 1:1 / Numéro du plan 15-B-041 / Feuille 1/1

University	Ecole Centrale de Lyon			**Car #**	81	**Part Cost**	$ 6,33
System	Suspension	**FileLink1**				**Qty**	2
Assembly	Lower Rear A-Arm	**FileLink2**		**FileLink1**			
Part	Rear Lower Rear A-Arm Mount	**FileLink3**		**FileLink2**		**Extended Cost**	$ 12,67
P/N Base	SU 03008			**FileLink3**			
Suffix	AA						
Details	Left and right mounts are symetrical : Same manufacturing procedure						

ItemOrder	Material	Use	UnitCost	Size1	Unit1	Size2	Unit2	Area Name	Area	Length	Density	Quantity	Sub Total
10	Steel, Mild	Stock material	$ 2,25	25	mm	25	mm	Rectangular 25*25mm	6,25E-04	0,039	7 860,00	1	$ 0,43
												Sub Total	**$ 0,43**

ItemOrder	Process	Use	UnitCost	Unit	Quantity	Multiplier	Mult. Val.	Sub Total
10	Machining Setup, Install and remove	Setup for machining	$ 1,30	unit	1			$ 1,30
20	Machining	Material removal	$ 0,04	cm^3	15,1	Material -Steel	3	$ 1,81
30	Drilled holes <25,4mm dia.	Holes for assembly	$ 0,35	hole	1			$ 0,35
40	Machining setup change		$ 0,65	unit	1			$ 0,65
50	Machining	Central groove	$ 0,04	cm^3	9,3	Material -Steel	3	$ 1,12
60	Machining setup change		$ 0,65	unit	1			$ 0,65
70	Machining	Tubing cavity	$ 0,04	cm^3	0,2	Material -Steel	3	$ 0,02
							Sub Total	**$ 5,90**

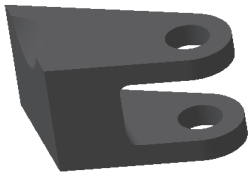

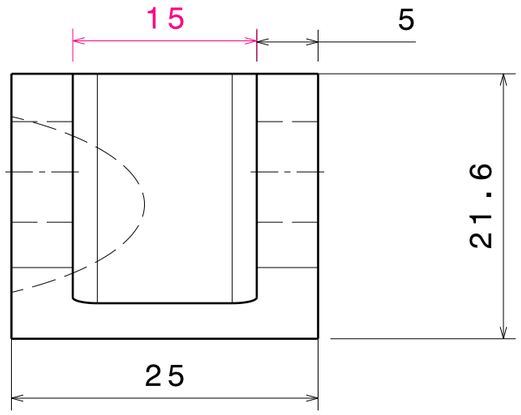

Vue de dessous
Echelle : 2:1

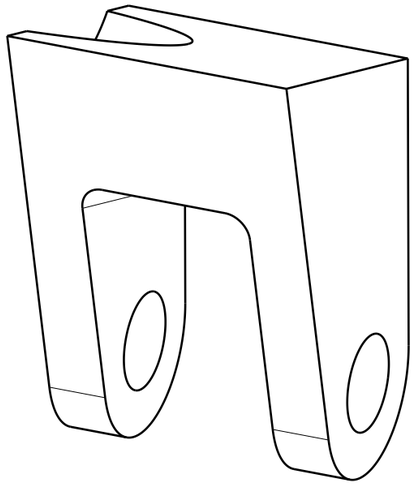

Vue isométrique
Echelle : 2:1

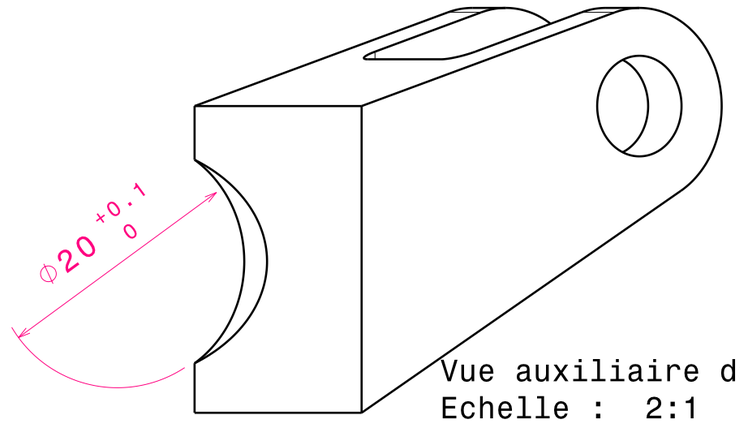

Vue auxiliaire de face
Echelle : 2:1

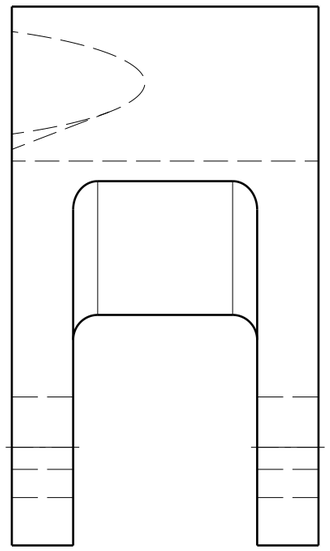

Vue de face
Echelle : 2:1

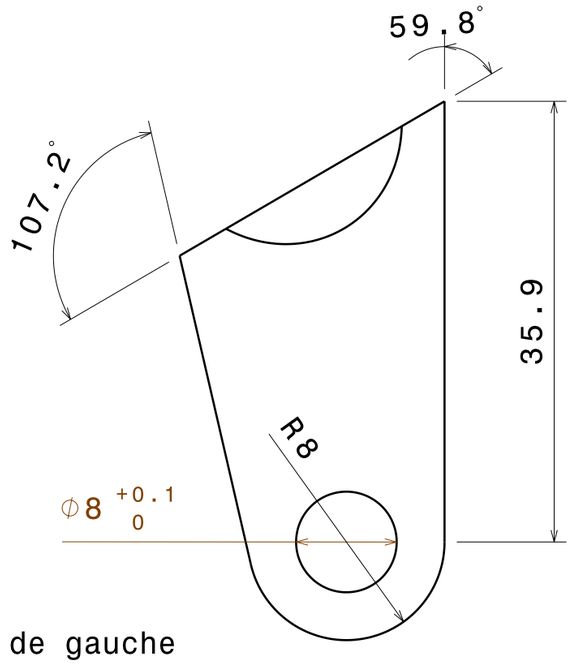

Vue de gauche
Echelle : 2:1

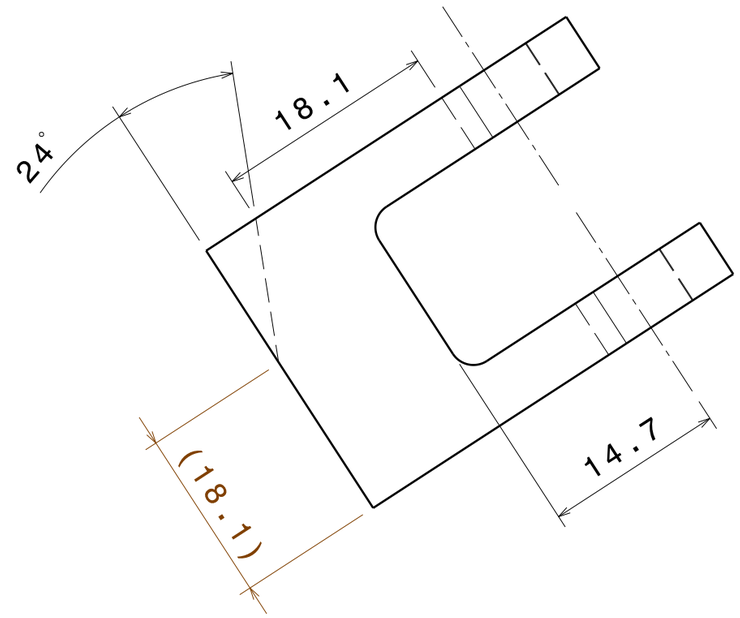

Vue auxiliaire de dessus
Echelle : 2:1

Brut 43.9*25*21.6

Tolérances générales
ISO 2768 mK

R SLC= 1mm<R<3mm

Taille A3		Ecurie Piston Sport Auto
Dessiné par Pierre Merlier	Date 02/12/2014	Désignation Chape LAS-g-ar-inf-ar
Coordonnées 06 34 50 32 42 pierre.merlier@ecl13.ec-lyon.fr		Quantité 1+1 / Matériau Acier S235 / Version 2.0
Plan vérifié par CCN		Echelle 2:1 / Numéro du plan 15-B-042 / Feuille 1/1

University	Ecole Cenrale de Lyon	**Car #**	81	**Asm Cost**	97,66
System	Suspension			**Qty**	2
Assembly	Upper Rear A-Arm	**FileLink1**			
P/N Base	SU A0004	**FileLink2**		**Extended Cost**	$ 195,32
Suffix	AA	**FileLink3**			
Details	Carbon composite A-Arm				

ItemOrder	Part	Part Cost	Quantity	Sub Total
10	Simple Insert	$ 5,16	2	$ 10,31
20	Double Lower Rear Insert	$ 11,68	1	$ 11,68
30	Cylinder	$ 0,66	2	$ 1,32
40	Front Lower Rear A-Arm tube	$ 9,12	1	$ 9,12
50	Rear Lower Rear A-Arm Tube	$ 7,90	1	$ 7,90
60	Spacer	$ 1,67	4	$ 6,66
70	Front Upper RearA-Arm Mount	$ 6,41	1	$ 6,41
80	Rear Upper Rear A-Arm Mount	$ 6,32	1	$ 6,32
			Sub Total	**$ 59,72**

ItemOrder	Material	Use	UnitCost	Size1	Unit1	Size2	Unit2	Area Name	Area	Length	Density	Quantity	Sub Total
10	Adhesive	Glue for bearings and tube -Included in Process	$ -									-	$ -
20	Bearing, Spherical	Link to uprights	$ 6,92	8	mm							3,00	$ 20,76
30	Paint	Mounts Painting	$ 10,00	0,01	m²							1,00	0,1
												Sub Total	**$ 20,86**

ItemOrder	Process	Use	UnitCost	Unit	Quantity	Multiplier	Mult. Val.	Sub Total
10	Brush Apply	Glue applying on Double Insert bores	$ 0,02	cm²	2	Repeat 2	2	$ 0,08
20	Assemble, 1kg, loose	Cylinder in Double Insert bores	$ 0,06	unit	1	Repeat 2	2	$ 0,12
30	Brush Apply	Glue applying on simple Insert bores	$ 0,10	cm²	11,3	Repeat 2	2	$ 2,26
40	Assemble, 1kg, loose	Simple Insert in Carbon Tube	$ 0,14	unit	1	Repeat 2	2	$ 0,28
50	Brush Apply	Glue applying on cylinders	$ 0,18	cm²	11,3	Repeat 2	2	$ 4,07
60	Assemble, 1kg, loose	Cylinder in Carbon Tube with Simple Insert	$ 0,22	unit	1	Repeat 2	2	$ 0,44
70	Brush Apply	Glue applying on bearing bores	$ 0,26	cm²	3,7	Repeat 3	3	$ 2,89
80	Assemble, 1kg, loose	Bearing in Insert Bores	$ 0,30	unit	1	Repeat 3	3	$ 0,90
90	Weld	Steel mounts welding	$ 0,15	cm	22			$ 3,30
100	Aerosol Apply	Steel mounts painting	$ 5,25	m²	0,1			$ 0,53
110	Assemble, 1kg, loose	A-Arm Positionning	$ 0,14	unit	1			$ 0,14
120	Assemble, 1kg, Line on line	Spacers installation	$ 0,13	unit	4			$ 0,52
130	Ratchet <= 25,4mm	M8 bolts installation	$ 0,13	unit	2			$ 0,26
140	Reaction tool <=25,4mm	LM8 nut blocking	$ 0,25	unit	2			$ 0,50
							Sub Total	**$ 16,28**

ItemOrder	Fastener	Use	UnitCost	Size1	Unit1	Size2	Unit2	Quantity	Sub Total
10	Bolt,Grade 12,9 (SAE)	A-Arm Fixing Bolts	$ 0,19	8	mm	30	mm	4	$ 0,76
30	Nut, Grade 8.8 (SAE 5)	A-Arm Fixing Nuts	$ 0,01	8	mm			4	$ 0,04
								Sub Total	**$ 0,80**

ItemOrder	Tooling	Use	UnitCost	Unit	Quantity	PVF	FractionIncluded	Sub Total
10	Welds - Welding Fixture	Welding processes	$ 500,00	point	8	3000	1	$ 1,33
							Sub Total	**$ 1,33**

University	Ecole Centrale de Lyon			**Car #**	81	**Part Cost**	$ 3,86
System	Suspension	**FileLink1**				**Qty**	2
Assembly	Upper Rear A-Arm	**FileLink2**		**FileLink1**			
Part	Simple Insert	**FileLink3**		**FileLink2**		**Extended Cost**	$ 7,71
P/N Base	SU 04001			**FileLink3**			
Suffix	AA						
Details							

ItemOrder	Material	Use	UnitCost	Size1	Unit1	Size2	Unit2	Area Name	Area	Length	Density	Quantity	Sub Total
10	Aluminium, Premium (per kg)	Insert	$ 4,20	0,077401	kg			Round area	4,91E-04	0,058	2 720	1,00	$ 0,33
												Sub Total	**$ 0,33**

ItemOrder	Process	Use	UnitCost	Unit	Quantity	Multiplier	Mult. Val.	Sub Total
10	Machining Setup, Install and remove		$ 1,30	unit	1			$ 1,30
20	Machining	Main shape machining	$ 0,04	cm^3	17	Material - Aluminium	1	$ 0,68
30	Machining Setup, Change		$ 0,65	unit	1			$ 0,65
40	Machining	Sides machining	$ 0,04	cm^3	4	Material - Aluminium	1	$ 0,16
50	Machining Setup, Change		$ 0,65	unit	1			$ 0,65
60	Machining	Hole machining	$ 0,04	cm^3	2	Material - Aluminium	1	$ 0,09
							Sub Total	**$ 3,53**

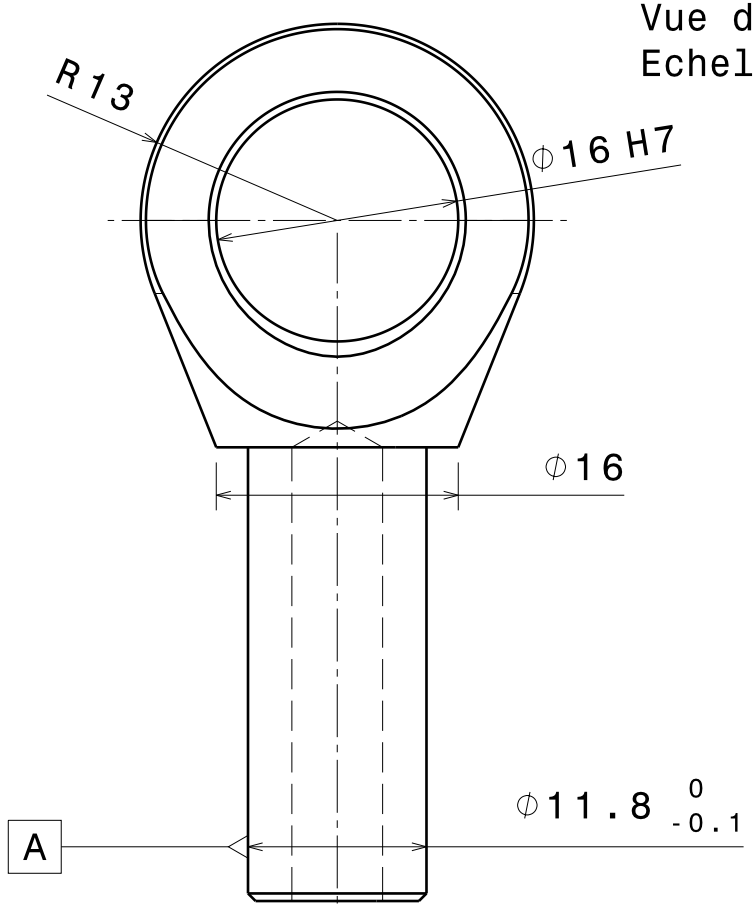

Vue de face
Echelle : 2:1

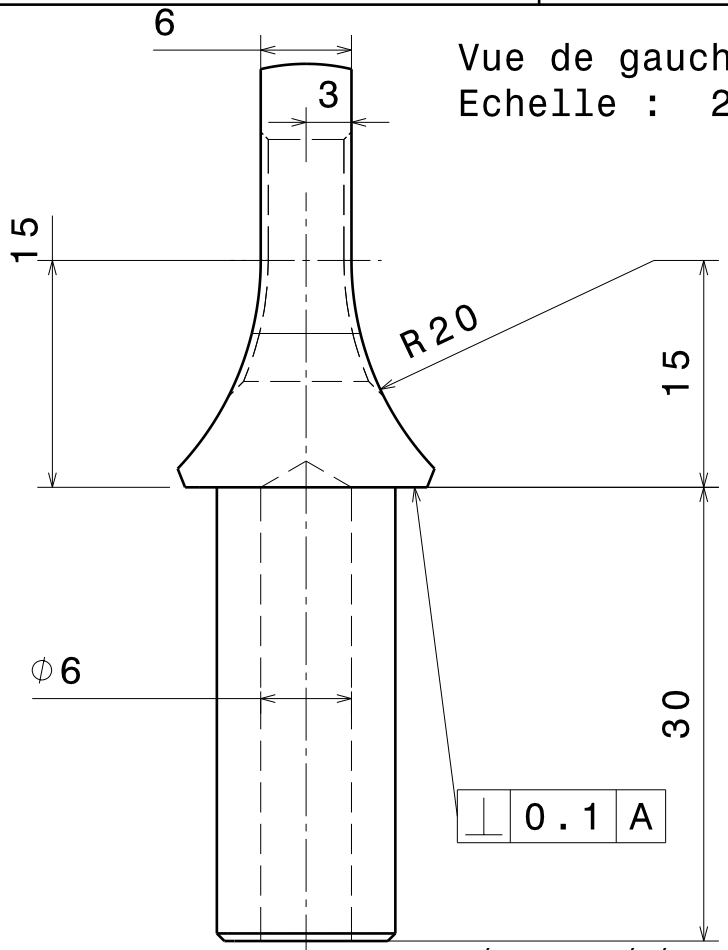

Vue de gauche
Echelle : 2:1

chanfreins de 0.5

Tolérances générales ISO 2768 - mK

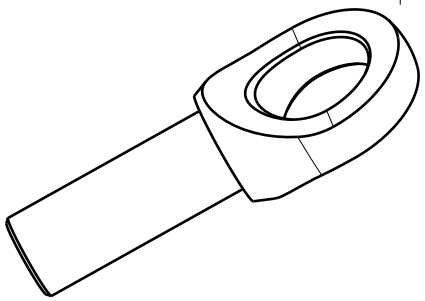

Vue isométrique
Echelle : 1:1

Taille A4		Ecurie Piston Sport Auto
Dessiné par Simon CHARAUDEAU	Date 05/01/2015	Désignation Insert coté chassis
Coordonnées 06 25 18 15 19 simon.charaudeau@ecl13.ec-lyon.fr		
Plan vérifié par PMR 409		Quantité 16 / Matériau Aluminium 2024 T4 / Version 1.0
		Echelle 1:1 / Numéro du plan 15-B-019 / Feuille 1/1

University	Ecole Centrale de Lyon			**Car #**	81	**Part Cost**	$ 11,68
System	Suspension	**FileLink1**				**Qty**	2
Assembly	Upper Rear A-Arm	**FileLink2**		**FileLink1**			
Part	Insert	**FileLink3**		**FileLink2**		**Extended Cost**	$ 23,36
P/N Base	SU 04002			**FileLink3**			
Suffix	AA						
Details							

ItemOrder	Material	Use	UnitCost	Size1	Unit1	Size2	Unit2	Area Name	Area	Length	Density	Quantity	Sub Total
10	Aluminium, Premium (per kg)	Insert	$ 4,20	0,39168	kg			Rectangular area	3,60E-03	0,040	2 720	1,00	$ 1,65
												Sub Total	**$ 1,65**

ItemOrder	Process	Use	UnitCost	Unit	Quantity	Multiplier	Mult. Val.	Sub Total
10	Machining Setup, Install and remove		$ 1,30	unit	1			$ 1,30
20	Machining	Main shape contouring and top of the main hole machining	$ 0,04	cm^3	104	Material - Aluminium	1	$ 4,16
30	Machining Setup, Change		$ 0,65	unit	1			$ 0,65
40	Machining	First tube hole machining	$ 0,04	cm^3	2	Material - Aluminium	1	$ 0,09
50	Machining Setup, Change		$ 0,65	unit	1			$ 0,65
60	Machining	Second tube hole machining	$ 0,04	cm^3	2	Material - Aluminium	1	$ 0,09
70	Machining Setup, Change		$ 0,65	unit	1			$ 0,65
80	Machining	Angle and bottom of the main hole machining	$ 0,04	cm^3	6	Material - Aluminium	1	$ 0,24
10	Machining Setup, Change		$ 0,65	unit	1			$ 0,65
20	Machining	Suspension rod support machining	$ 0,04	cm^3	30	Material - Aluminium	1	$ 1,20
40	Drilled holes < 25.4 mm	Suspension rod support drilling	$ 0,35		1	Material - Aluminium	1	$ 0,35
							Sub Total	**$ 10,03**

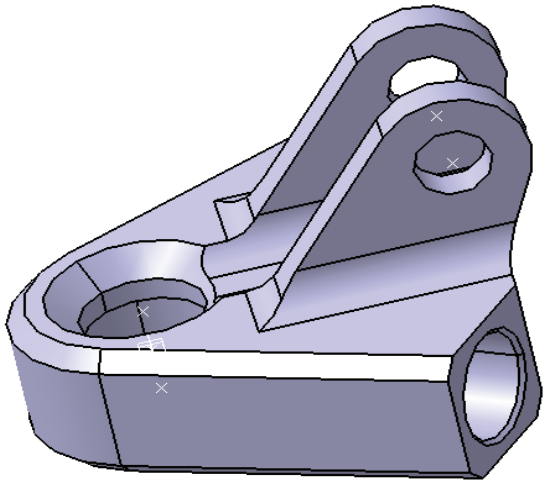

Vue de face Tolérances générales ISO 2768 - mK Chanfreins perçages de 0.5 Chanfreins extérieurs de 2 Congés de 4

Echelle : 2:1

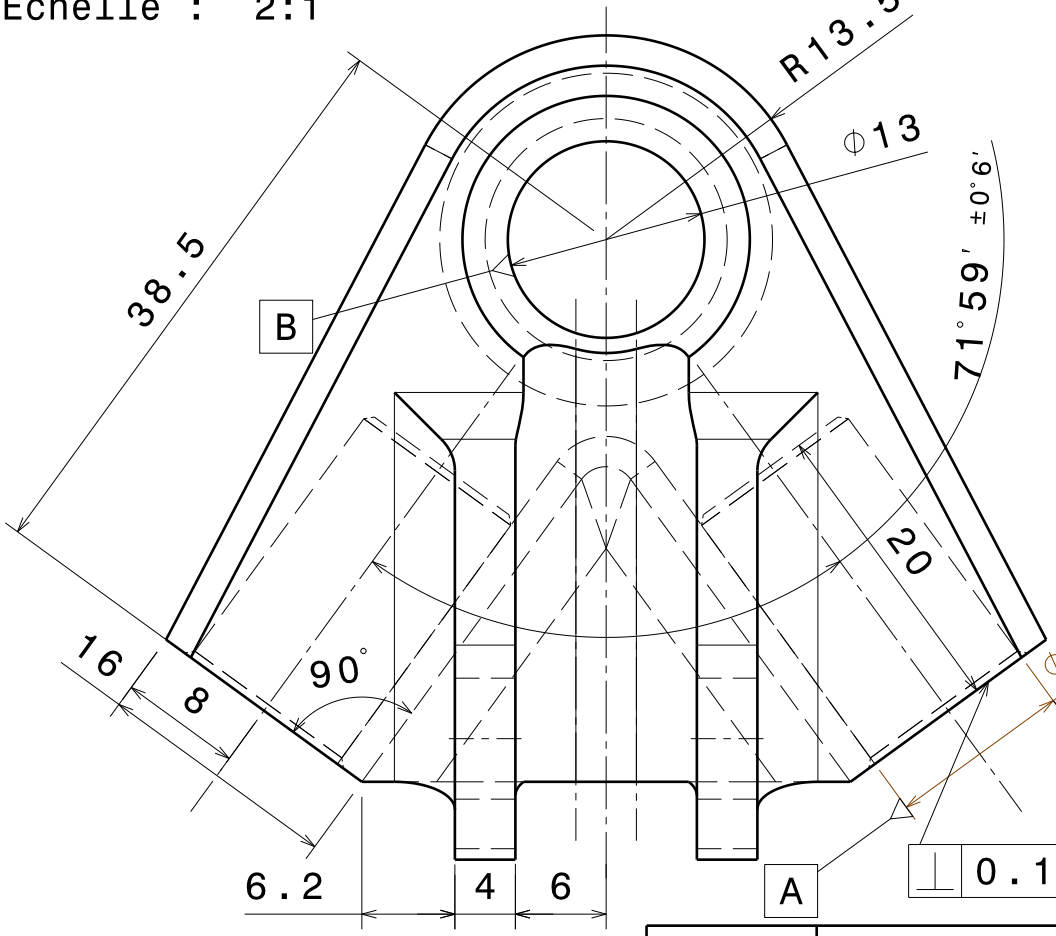

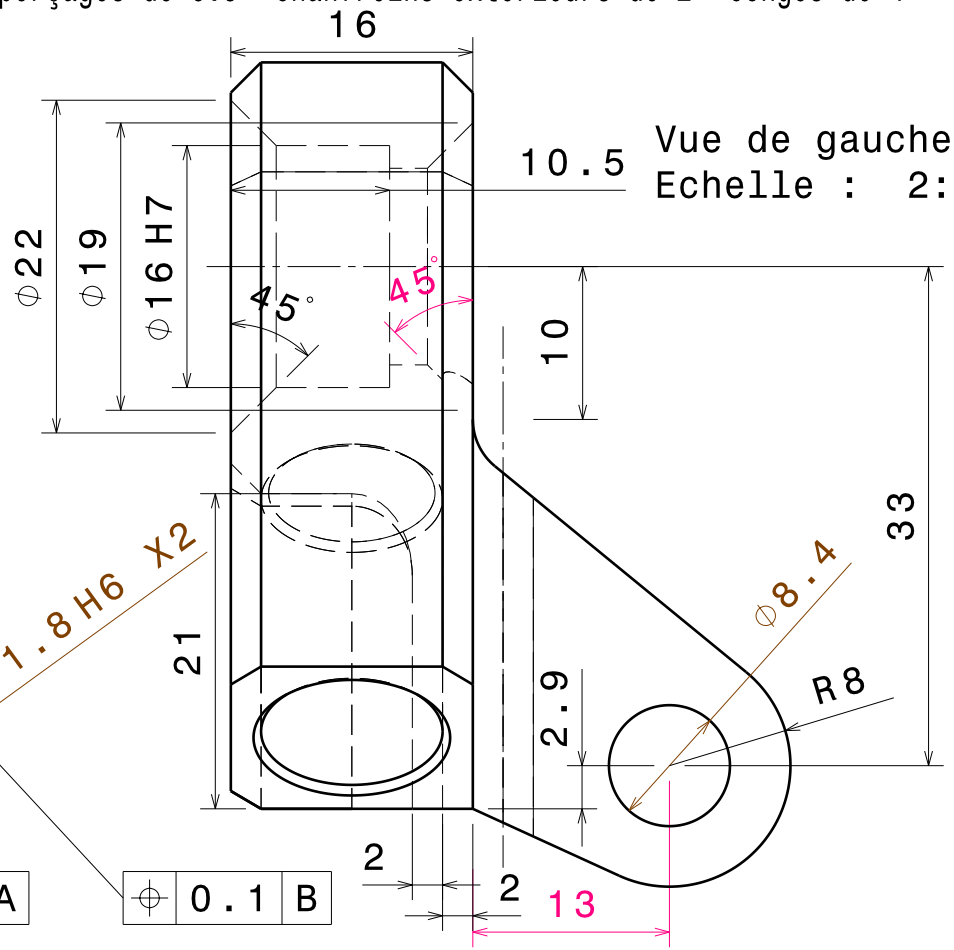

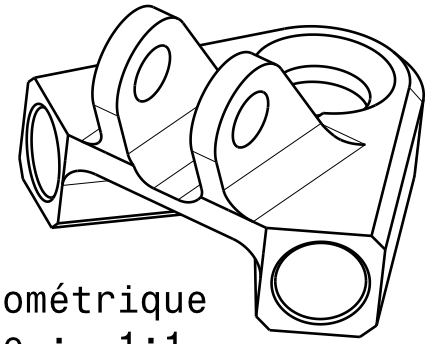

Vue isométrique
Echelle : 1:1

Taille A4		Ecurie Piston Sport Auto
Dessiné par Simon CHARAUDEAU	Date 29/12/2014	Désignation: Insert arrière supérieur
Coordonnées 06 25 18 15 19 simon.charaudeau@ecl13.ec-lyon.fr		
Plan vérifié par PMR 411		Quantité 2 / Matériau Aluminium 7075 T6 / Version 1.0
		Echelle 1:1 / Numéro du plan 15-B-024 / Feuille 1/1

University	Ecole Centrale de Lyon			**Car #**	81	**Part Cost**	$ 0,66
System	Suspension	**FileLink1**				**Qty**	2
Assembly	Upper Rear A-Arm	**FileLink2**		**FileLink1**			
Part	Cylinder	**FileLink3**		**FileLink2**		**Extended Cost**	$ 1,32
P/N Base	SU 04003			**FileLink3**			
Suffix	AA						
Details							

ItemOrder	Material	Use	UnitCost	Size1	Unit1	Size2	Unit2	Area Name	Area	Length	Density	Quantity	Sub Total
10	Aluminium, Premium (per kg)	cylinder	$ 4,20	0,06149376	kg			Round area	4,52E-04	0,050	2 720	1,00	$ 0,26
												Sub Total	**$ 0,26**

ItemOrder	Process	Use	UnitCost	Unit	Quantity	Multiplier	Mult. Val.	Sub Total
10	Saw or tubing cut		$ 0,40	cm	1			$ 0,40
							Sub Total	**$ 0,40**

University	Ecole Centrale de Lyon			**Car #**	81	**Part Cost**	$ 9,12
System	Suspension	**FileLink1**				**Qty**	1
Assembly	Upper Rear A-Arm	**FileLink2**		**FileLink1**			
Part	Front Upper Rear A-Arm Carbon Tube	**FileLink3**		**FileLink2**		**Extended Cost**	$ 9,12
P/N Base	SU 03004			**FileLink3**			
Suffix	AA						
Details							

ItemOrder	Material	Use	UnitCost	Size1	Unit1	Size2	Unit2	Area Name	Area	Length	Density	Quantity	Sub Total
10	Carbon Fiber, 1 Ply	Stock	$ 200,00	8	mm	6	mm	Tube	8,80E-05	0,216	2 000,00	1	$ 7,60
20	Aramid (Kevlar) Fiber, 1 Ply	Stock	$ 150,00	8	mm	30	% Area	Tube	3,26E-03	0,001	2 000,00	1	$ 0,49
												Sub Total	**$ 8,09**

ItemOrder	Process	Use	UnitCost	Unit	Quantity	Multiplier	Mult. Val.	Sub Total
10	Lamination, Fillament Wirring	Tube Lamination	$ 25,00	kg	0,04125791			$ 1,03
							Sub Total	**$ 1,03**

University	Ecole Centrale de Lyon			**Car #**	81	**Part Cost**	$ 7,90
System	Suspension	**FileLink1**				**Qty**	1
Assembly	Upper Rear A-Arm	**FileLink2**		**FileLink1**			
Part	Rear Upper Rear A-Arm Carbon Tube	**FileLink3**		**FileLink2**		**Extended Cost**	$ 7,90
P/N Base	SU 03005			**FileLink3**			
Suffix	AA						
Details							

ItemOrder	Material	Use	UnitCost	Size1	Unit1	Size2	Unit2	Area Name	Area	Length	Density	Quantity	Sub Total
10	Carbon Fiber, 1 Ply	Stock	$ 200,00	8	mm	6	mm	Tube	8,80E-05	0,187	2 000,00	1	$ 6,58
20	Aramid (Kevlar) Fiber, 1 Ply	Stock	$ 150,00	8	mm	30	% Area	Tube	2,82E-03	0,001	2 000,00	1	$ 0,42
												Sub Total	**$ 7,00**

ItemOrder	Process	Use	UnitCost	Unit	Quantity	Multiplier	Mult. Val.	Sub Total
10	Lamination, Fillament Wirring	Tube Lamination	$ 25,00	kg	0,03571865			$ 0,89
							Sub Total	**$ 0,89**

University	Ecole Centrale de Lyon			**Car #**	81	**Part Cost**	$ 1,67
System	Suspension	**FileLink1**				**Qty**	4
Assembly	Upper Rear A-Arm	**FileLink2**		**FileLink1**			
Part	Spacer	**FileLink3**		**FileLink2**		**Extended Cost**	$ 6,66
P/N Base	SU 04006			**FileLink3**			
Suffix	AA						
Details							

ItemOrder	Material	Use	UnitCost	Size1	Unit1	Size2	Unit2	Area Name	Area	Length	Density	Quantity	Sub Total
10	Aluminium, normal (per kg)		$ 4,20	14	mm			Round 14mm	1,54E-04	0,004	2 710,00	1	$ 0,01
												Sub Total	**$ 0,01**

ItemOrder	Process	Use	UnitCost	Unit	Quantity	Multiplier	Mult. Val.	Sub Total
10	Machining Setup, Install and remove	Setup for machining	$ 1,30	unit	1			$ 1,30
20	Machining	Material removal	$ 0,04	cm^3	0,23	Material - Aluminiu	1	$ 0,01
30	Drilled holes <25,4mm dia.	Holes for assembly	$ 0,35	hole	1			$ 0,35
							Sub Total	**$ 1,66**

University	Ecole Centrale de Lyon			**Car #**	81	**Part Cost**	$ 6,41
System	Suspension	**FileLink1**				**Qty**	2
Assembly	Upper Rear A-Arm	**FileLink2**		**FileLink1**			
Part	Front Upper RearA-Arm Mount	**FileLink3**		**FileLink2**		**Extended Cost**	$ 12,81
P/N Base	SU 04007			**FileLink3**			
Suffix	AA						
Details	Left and right mounts are symetrical : Same manufacturing procedure						

ItemOrder	Material	Use	UnitCost	Size1	Unit1	Size2	Unit2	Area Name	Area	Length	Density	Quantity	Sub Total
10	Steel, Mild	Stock material	$ 2,25	25	mm	25	mm	Rectangular 25*25mm	6,25E-04	0,039	7 860,00	1	$ 0,43
												Sub Total	**$ 0,43**

ItemOrder	Process	Use	UnitCost	Unit	Quantity	Multiplier	Mult. Val.	Sub Total
10	Machining Setup, Install and remove	Setup for machining	$ 1,30	unit	1			$ 1,30
20	Machining	Material removal	$ 0,04	cm^3	14,4	Material -Steel	3	$ 1,73
30	Drilled holes <25,4mm dia.	Holes for assembly	$ 0,35	hole	1			$ 0,35
40	Machining setup change		$ 0,65	unit	1			$ 0,65
50	Machining	Central groove	$ 0,04	cm^3	9,3	Material -Steel	3	$ 1,12
60	Machining setup change		$ 0,65	unit	1			$ 0,65
70	Machining	Tube cavity	$ 0,04	cm^3	1,5	Material -Steel	3	$ 0,18
							Sub Total	**$ 5,97**

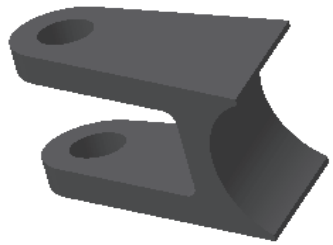

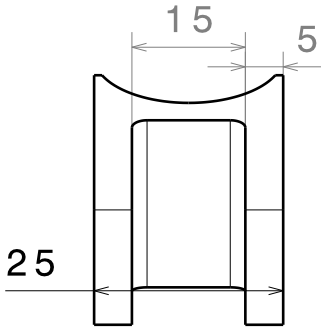

Vue de dessous
Echelle : 1:1

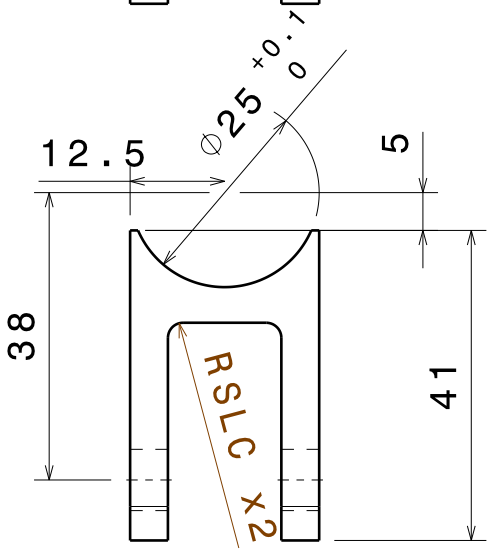

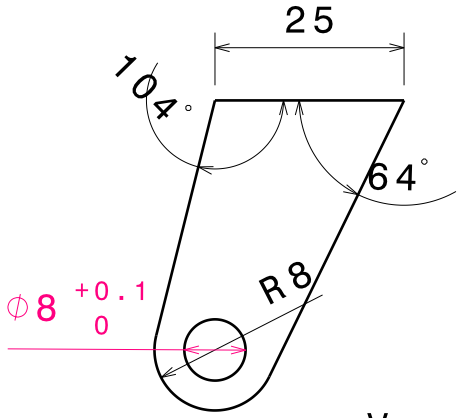

Vue de gauche
Echelle : 1:1

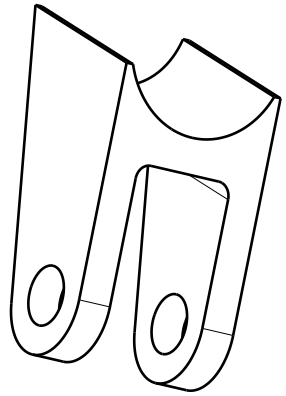

Vue isométrique
Echelle : 1:1

Brut 41*25*25

Vue de face
Echelle : 1:1

R SLC=1mm<R<3mm

Tolérances générales
ISO 2768 mK

Taille A4		Ecurie Piston Sport Auto
Dessiné par Pierre Merlier	Date 26/11/2014	Désignation Chape LAS g. arr. sup. av
Coordonnées 06 34 50 32 42 pierre.merlier@ecl13.ec-lyon.fr		Quantité 1+1 / Matériau Acier S235 / Version 1.0
Plan vérifié par CCN 417		Echelle 1:1 / Numéro du plan 15-B-035 / Feuille 1/1

University	Ecole Centrale de Lyon			**Car #**	81	**Part Cost**	$ 6,32
System	Suspension	**FileLink1**				**Qty**	2
Assembly	Upper Rear A-Arm	**FileLink2**		**FileLink1**			
Part	Rear Upper Rear A-Arm Mount	**FileLink3**		**FileLink2**		**Extended Cost**	$ 12,64
P/N Base	SU 04008			**FileLink3**			
Suffix	AA						
Details	Left and right mounts are symetrical : Same manufacturing procedure						

ItemOrder	Material	Use	UnitCost	Size1	Unit1	Size2	Unit2	Area Name	Area	Length	Density	Quantity	Sub Total
10	Steel, Mild	Stock material	$ 2,25	25	mm	25	mm	Rectangular 25*25mm	6,25E-04	0,039	7 860,00	1	$ 0,43
												Sub Total	**$ 0,43**

ItemOrder	Process	Use	UnitCost	Unit	Quantity	Multiplier	Mult. Val.	Sub Total
10	Machining Setup, Install and remove	Setup for machining	$ 1,30	unit	1			$ 1,30
20	Machining	Material removal	$ 0,04	cm^3	14,8	Material -Steel	3	$ 1,78
30	Drilled holes <25,4mm dia.	Holes for assembly	$ 0,35	hole	1			$ 0,35
40	Machining setup change		$ 0,65	unit	1			$ 0,65
50	Machining	Central groove	$ 0,04	cm^3	9,2	Material -Steel	3	$ 1,10
60	Machining setup change		$ 0,65	unit	1			$ 0,65
70	Machining	Angle	$ 0,04	cm^3	0,5	Material -Steel	3	$ 0,06
							Sub Total	**$ 5,89**

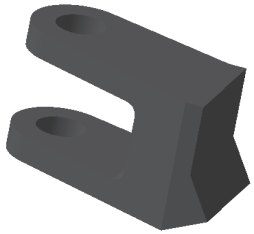

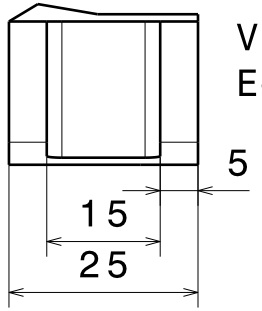

Vue de dessous
Echelle : 1:1

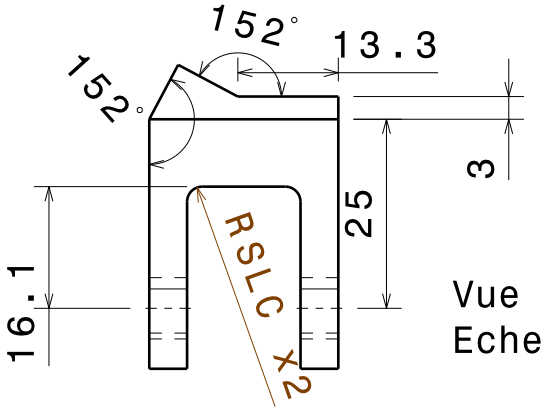

Vue auxiliaire
Echelle : 1:1

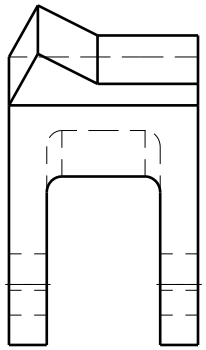

Vue de face
Echelle : 1:1

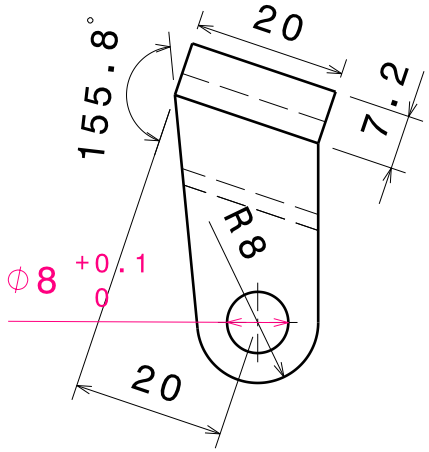

Vue de gauche
Echelle : 1:1

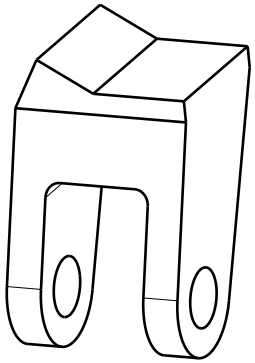

Vue isométrique
Echelle : 1:1

Brut 40*25*25

R SLC=1mm<R<3mm

Tolérances générales
ISO 2768 mK

Taille A4		Ecurie Piston Sport Auto
Dessiné par Pierre Merlier	Date 26/11/2014	Désignation Chape triangle LAS-g-arr-sup-arr
Coordonnées 06 34 50 32 42 pierre.merlier@ecl13.ec-lyon.fr		Quantité 1+1 / Matériau Acier S235 / Version 1.0
Plan vérifié par CCN 419		Echelle 1:1 / Numéro du plan 15-B-036 / Feuille 1/1

University	Ecole Cenrale de Lyon	**Car #**	81	**Asm Cost**	347,75
System	Suspension			**Qty**	2
Assembly	Front Suspension	**FileLink1**			
P/N Base	SU A0005	**FileLink2**		**Extended Cost**	$ 695,50
Suffix	AA	**FileLink3**			
Details	Front Suspension				

ItemOrder	Part	Part Cost	Quantity	Sub Total
10	Dampers	$ 305,00	1	$ 305,00
20	Springs	$ 25,00	1	$ 25,00
30	Front Suspension Mount	$ 8,12	1	$ 8,12
40	Sapcer	$ 1,67	2	$ 3,33
			Sub Total	**$ 341,45**

ItemOrder	Material	Use	UnitCost	Size1	Unit1	Material - Aluminium	Unit2	Area Name	Area	Length	Density	Quantity	Sub Total
10	Paint	Front suspension mount	$ 10,00	0,05	m^2							1,00	$ 0,50
												Sub Total	**$ 0,50**

ItemOrder	Process	Use	UnitCost	Unit	Quantit	Multiplier	Mult. Val.	Sub Total
10	Weld	Welding the suspension n	$ 0,15	cm	8,6			$ 1,29
20	Aerosol apply	Painting of suspension mo	$ 5,25	m^2	0,05			$ 0,26
30	Assemble, 1 kg, Loose	Attaching springs to damp	$ 0,06	unit	1			$ 0,06
40	Assemble, 1 kg, Loose	Put the damper in place	$ 0,06	unit	1			$ 0,06
50	Ratchet <= 25.4 mm	Bolt damper to suspensio	$ 0,75	unit	1			$ 0,75
60	Reaction Tool <= 25.4 mm	Thigten the M8 nuts	$ 0,25	unit	1			$ 0,25
70	Assemble, 1 kg, Loose	Put the damper in place	$ 0,06	unit	1			$ 0,06
80	Ratchet <= 25.4 mm	Bolt damper to rocker	$ 0,75	unit	1			$ 0,75
90	Reaction Tool <= 25.4 mm	Thigten the M8 nuts	$ 0,25	unit	1			$ 0,25
							Sub Total	**$ 3,73**

ItemOrder	Fastener	Use	UnitCost	Size1	Unit1	Size2	Unit2	Quantity	Sub Total
10	Bolt,Grade 12.9 (SAE)		$ 0,33	8	mm	50	mm	1	$ 0,33
20	Bolt,Grade 12.9 (SAE)		$ 0,37	8	mm	55	mm	1	$ 0,37
30	Washer, Grade 12.9 (SAE 5)		$ 0,07	8	mm			2	$ 0,14
40	Nut, Grade 12.9		$ 0,07	8	mm			8	$ 0,56
								Sub Total	**$ 1,40**

ItemOrder	Tooling	Use	UnitCost	Unit	Quantit	PVF	FractionIncluded	Sub Total
10	Welds - Welding Fixture	Welding of the mounts th	$ 500,00	point	4	3000	1	$ 0,67
							Sub Total	**$ 0,67**

University	Ecole Centrale de Lyon			**Car #**	81	**Part Cost**	$ 305,00
System	Suspension	**FileLink1**				**Qty**	1
Assembly	Front Suspension	**FileLink2**		**FileLink1**			
Part	Dampers	**FileLink3**		**FileLink2**		**Extended Cost**	$ 305,00
P/N Base	SU 05001			**FileLink3**			
Suffix	AA						
Details	Damper, Ohlins TTX 25						

ItemOrder	Material	Use	UnitCost	Size1	Unit1	Size2	Unit2	Area Name	Area	Length	Density	Quantity	Sub Total
10	Damper, Ohlins TTX 25	Dampers	$ 305,00									1,00	$ 305,00
												Sub Total	**$ 305,00**

University	Ecole Centrale de Lyon			**Car #**	81	**Part Cost**	$ 25,00
System	Suspension	**FileLink1**				**Qty**	1
Assembly	Front Suspension	**FileLink2**		**FileLink1**			
Part	Springs	**FileLink3**		**FileLink2**		**Extended Cost**	$ 25,00
P/N Base	SU 05002			**FileLink3**			
Suffix	AA						
Details	Springs						

ItemOrder	Material	Use	UnitCost	Size1	Unit1	Size2	Unit2	Area Name	Area	Length	Density	Quantity	Sub Total
10	Suspension Springs, Coil Spring, Steel	Spring for the dampers	$ 25,00									1	$ 25,00
												Sub Total	**$ 25,00**

University	Ecole Centrale de Lyon			**Car #**	81	**Part Cost**	$ 8,12
System	Suspension	**FileLink1**				**Qty**	1
Assembly	Front suspension	**FileLink2**		**FileLink1**			
Part	Front suspension mount	**FileLink3**		**FileLink2**		**Extended Cost**	$ 8,12
P/N Base	SU 05003			**FileLink3**			
Suffix	AA						
Details	Left and right mounts are symetrical : Same manufacturing procedure						

ItemOrder	Material	Use	UnitCost	Size1	Unit1	Size2	Unit2	Area Name	Area	Length	Density	Quantity	Sub Total
10	Steel, Mild	Stock material	$ 2,25	25	mm	25	mm	Rectangular 25*25mm	6,25E-04	0,055	7860	1	$ 0,61
												Sub Total	**$ 0,61**

ItemOrder	Process	Use	UnitCost	Unit	Quantit	Multiplier	Mult. Val.	Sub Total
10	Machining Setup, Install and remove	Setup for machining	$ 1,30	unit	1			$ 1,30
20	Machining	Material removal	$ 0,04	cm^3	17,2	Material - Aluminium	3	$ 2,06
30	Drilled holes <25,4mm dia.	Holes for assembly	$ 0,35	hole	1			$ 0,35
40	Machining setup change		$ 0,65	unit	1			$ 0,65
50	Machining	Central groove	$ 0,04	cm^3	18,3	Material -Stee	3	$ 2,20
60	Machining setup change		$ 0,65	unit	1			$ 0,65
70	Machining	Tubing cavity	$ 0,04	cm^3	2,5	Material -Stee	3	$ 0,30
							Sub Total	**$ 7,51**

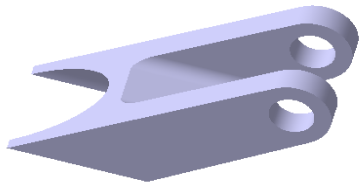

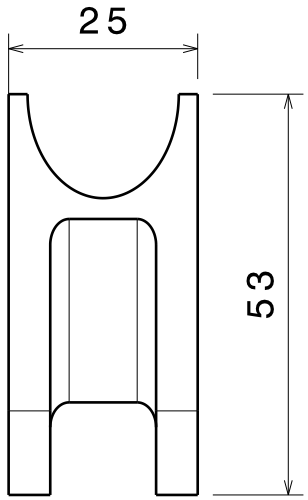

Vue de face
Echelle : 1:1

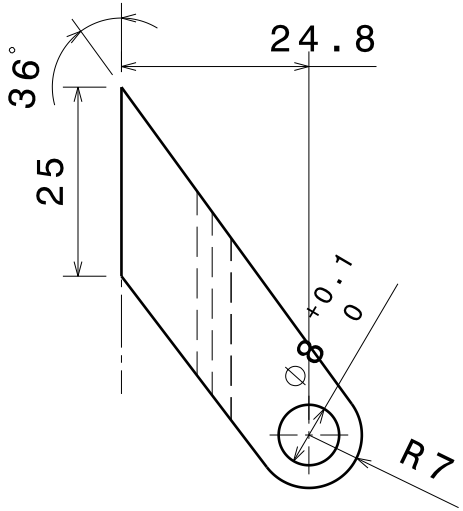

Vue de gauche
Echelle : 1:1

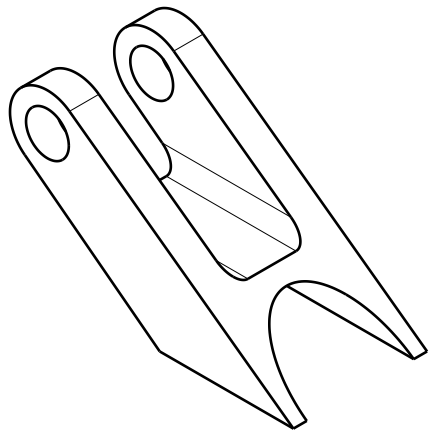

Vue isométrique
Echelle : 1:1

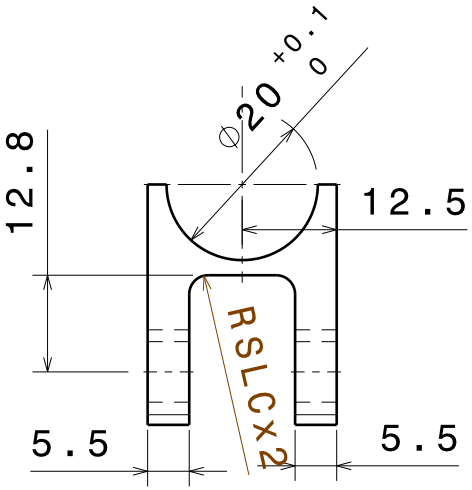

Vue de dessus
Echelle : 1:1

Tolérances générales ISO 2768 mK
RSLC 1mm<R<3mm
Brut 25*31.8*53

Taille A4		Ecurie Piston Sport Auto
Dessiné par Clément CASTELLAN	Date 12/12/2014	Désignation Chape amortisseur avant
Coordonnées clement.castellan@ecl13.ec-lyon.fr 06.34.33.50.85		Quantité 1+1 / Matériau Acier S234 / Version 1.0
Plan vérifié par Fabien ROBERT 424		Echelle 1:1 / Numéro du plan 15-B-015 / Feuille 1/1

University	Ecole Centrale de Lyon			**Car #**	81	**Part Cost**	$ 1,67
System	Suspension	**FileLink1**				**Qty**	2
Assembly	Front suspension	**FileLink2**		**FileLink1**			
Part	Spacer	**FileLink3**		**FileLink2**		**Extended Cost**	$ 3,33
P/N Base	SU 05004			**FileLink3**			
Suffix	AA						
Details							

ItemOrder	Material	Use	UnitCost	Size1	Unit1	Size2	Unit2	Area Name	Area	Length	Density	Quantity	Sub Total
10	Aluminium, normal (per kg)		$ 4,20	14	mm			Round 14mm	1,54E-04	0,004	2710	1	$ 0,01
												Sub Total	**$ 0,01**

ItemOrder	Process	Use	UnitCost	Unit	Quantit	Multiplier	Mult. Val.	Sub Total
10	Machining Setup, Install and remove	Setup for machining	$ 1,30	unit	1			$ 1,30
20	Machining	Material removal	$ 0,04	cm^3	0,23	Material - Aluminium	1	$ 0,01
30	Drilled holes <25,4mm dia.	Holes for assembly	$ 0,35	hole	1			$ 0,35
							Sub Total	**$ 1,66**

University	Ecole Cenrale de Lyon	**Car #**	81	**Asm Cost**	43,64
System	Suspension			**Qty**	2
Assembly	Front rocker	**FileLink1**			
P/N Base	SU A0006	**FileLink2**		**Extended Cost**	$ 87,27
Suffix	AA	**FileLink3**			
Details	Assembly of the Front rocker				

ItemOrder	Part	Part Cost	Quantity	Sub Total
10	Sheets metal of the Rocker	$ 5,45	1	$ 5,45
20	Cylinder	$ 0,20	1	$ 0,20
30	Bushing	$ 1,32	2	$ 2,64
40	Rocker mount	$ 8,13	1	$ 8,13
50	Push-rod tube	$ 17,48	1	$ 17,48
60	Push rod insert	$ 2,95	2	$ 5,91
			Sub Total	**$ 39,81**

ItemOrder	Material	Use	UnitCost	Size1	Unit1	Size2	Unit2	Area Name	Area	Length	Density	Quantity	Sub Total
10	Paint	Rocker mount red paint	$ 10,00	0,006	m^2							1,00	$ 0,06
20	Paint	Rocker red black paint	$ 10,00	0,013	m^2							1,00	$ 0,13
												Sub Total	**$ 0,19**

ItemOrder	Process	Use	UnitCost	Unit	Quantity	Multiplier	Mult. Val.	Sub Total
10	Weld	Welding the rocker mounts on the frame	$ 0,15	cm	5,8			$ 0,87
20	Aerosol apply	Painting of rocker mount in red	$ 5,25	m^2	0,006			$ 0,03
30	Aerosol apply	Painting of the rocker and the cylinders	$ 5,25	m^2	0,013			$ 0,07
40	Assemble, 1 kg, Interference	Insert 2 bronze bushings into the rocker	$ 0,19	unit	2			$ 0,38
50	Assemble, 1 kg, Loose	Put the rocker in place	$ 0,06	unit	1			$ 0,06
60	Ratchet <= 25.4 mm	Bolt rocker to rocker mount	$ 0,75	unit	1			$ 0,75
70	Reaction Tool <= 25.4 mm	Thigten the M8 nuts	$ 0,25	unit	1			$ 0,25
80	Brush Apply	Gluing the insert on the tube	$ 0,02	cm²	5,6	Repeat 2	2	$ 0,22
90	Ratchet	Put the nuts on the bolts	$ 0,50	unit	2			$ 1,00
100	Wrench	Put the nuts on the rod end	$ 1,00	unit	2			$ 2,00
							Sub Total	**$ 2,41**

ItemOrder	Fastener	Use	UnitCost	Size1	Unit1	Size2	Unit2	Quantity	Sub Total
10	Bolt,Grade 12.9 (SAE)		$ 0,42	8	mm	60	mm	1	$ 0,42
20	Washer, Grade 12.9 (SAE 5)	Hexagon socket headless screw	$ 0,07	8	mm			1	$ 0,07
30	Nut, Grade 12.9		$ 0,07	8	mm			1	$ 0,07
								Sub Total	**$ 0,56**

ItemOrder	Tooling	Use	UnitCost	Unit	Quantity	PVF	FractionIncluded	Sub Total
10	Welds - Welding Fixture	Welding of the mounts the frame	$ 500,00	point	4	3000	1	$ 0,67
							Sub Total	**$ 0,67**

University	Ecole Centrale de Lyon			**Car #**	81	**Part Cost**	$ 5,45
System	Suspension	**FileLink1**				**Qty**	2
Assembly	Front rocker	**FileLink2**		**FileLink1**			
Part	Sheets metal of the Rocker	**FileLink3**		**FileLink2**		**Extended Cost**	$ 1,15
P/N Base	SU 06001			**FileLink3**			
Suffix	AA						
Details	Sheets metal of the Rocker						

ItemOrder	Material	Use	UnitCost	Size1	Unit1	Size2	Unit2	Area Name	Area	Length	Density	Quantity	Sub Total
10	Steel, Mild	Sheet metal for the rocker	$ 2,25	90	mm	60	mm	Rectangular area 90mm x 60 mm	5,40E-03	0,003	7 860	2,00	$ 0,57
												Sub Total	**$ 0,57**

ItemOrder	Process	Use	UnitCost	Unit	Quantity	Multiplier	Mult. Val.	Sub Total
10	Machining Setup, Install and remove	Install and remove parts from laser machine	$ 1,30	unit	1	Repeat 2	2	$ 2,60
20	Laser cut		$ 0,01	cm	38	Repeat 2 and Material Steel	6	$ 2,28
							Sub Total	**$ 4,88**

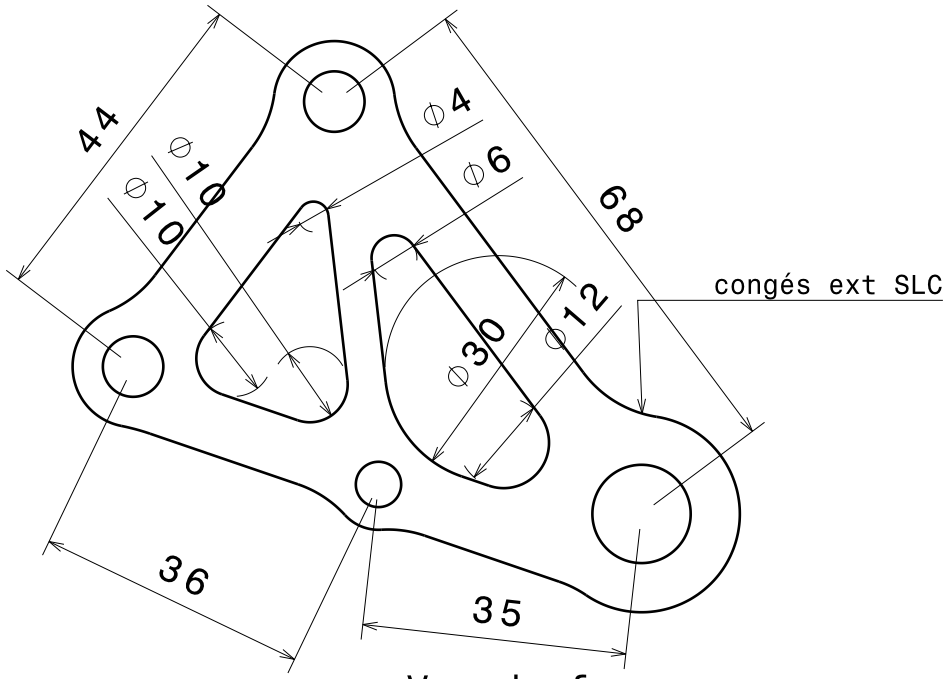

Vue de face
Echelle : 1:1

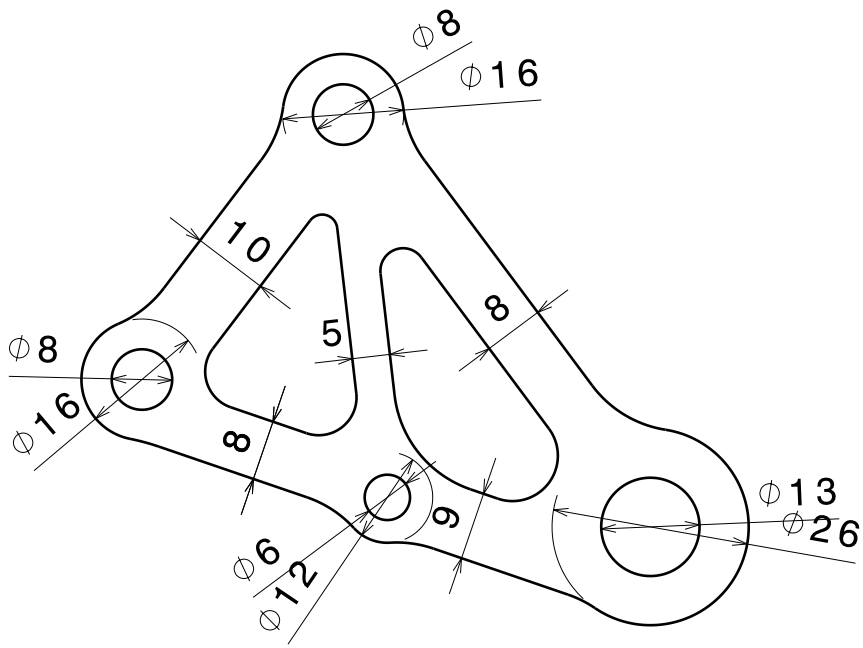

Vue de face
Echelle : 1:1

SLC congés ext d=30mm

Tolérances générales ISO 2768 - mK

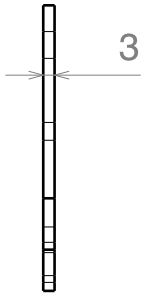

Vue de gauche
Echelle : 1:2

Taille A4		Ecurie Piston Sport Auto
Dessiné par Romain Carré	Date 09/12/2014	Désignation: Basculeur avant
Coordonnées: Tel : 06 45 59 91 01, romain.carre@ecl13.ec-lyon.fr		Quantité: 4 / Matériau: Acier s550 / Version: 1
Plan vérifié par CCN 428		Echelle 1:1 / Numéro du plan 15-M-070 / Feuille 1/1

University	Ecole Centrale de Lyon			**Car #**	81	**Part Cost**	$ 0,20
System	Suspension	**FileLink1**				**Qty**	2
Assembly	Front rocker	**FileLink2**		**FileLink1**			
Part	Cylinder	**FileLink3**		**FileLink2**		**Extended Cost**	$ 0,40
P/N Base	SU 06002			**FileLink3**			
Suffix	AA						
Details	Cylinder to assure the pivot linkage						

ItemOrder	Material	Use	UnitCost	Size1	Unit1	Size2	Unit2	Area Name	Area	Length	Density	Quantity	Sub Total
10	Steel, Mild	Stock material for cylinder	$ 2,25	13	mm			Round Area radius 11mm	8,00E-04	0,014	7860	1	$ 0,20
												Sub Total	**$ 0,20**

ItemOrder	Process	Use	UnitCost	Unit	Quantity	Multiplier	Mult. Val.	Sub Total
10	Machining Setup, Install and remove	Install and remove parts	$ 1,30	unit	1			$ 1,30
20	Machining	Outer profile	$ 0,04	cm^3	2	Material steel	3	$ 0,22
30	Drilled holes < 25.4 mm dia.	Hole for the pivot	$ 0,35	hole	1			$ 0,35
							Sub Total	**$ 1,87**

University	Ecole Centrale de Lyon			**Car #**	81	**Part Cost**	$ 1,32
System	Suspension	**FileLink1**				**Qty**	2
Assembly	Front rocker	**FileLink2**		**FileLink1**			
Part	Bushing	**FileLink3**		**FileLink2**		**Extended Cost**	$ 2,65
P/N Base	SU 06003			**FileLink3**			
Suffix	AA						
Details	Bushing						

ItemOrder	Material	Use	UnitCost	Size1	Unit1	Size2	Unit2	Area Name	Area	Length	Density	Quantity	Sub Total
10	Bronze (per kg)	Stock material for bushings	$ 2,20	5	mm			Round area, radius 5mm	0	0,01	6 400,00	1	$ 0,01
												Sub Total	**$ 0,01**

ItemOrder	Process	Use	UnitCost	Unit	Quantity	Multiplier	Mult. Val.	Sub Total
10	Machining Setup, Install and remove	Setup machining (turning) and removal	$ 1,30	unit	1			$ 1,30
20	Machining	Machining of the bushing (turning)	$ 0,04	cm^3	0	Material Bronze	1,33	$ 0,01
							Sub Total	**$ 1,31**

University	Ecole Centrale de Lyon			**Car #**	81	**Part Cost**	$ 8,13
System	Suspension	**FileLink1**				**Qty**	1
Assembly	Front rocker	**FileLink2**		**FileLink1**			
Part	Rocker mount	**FileLink3**		**FileLink2**		**Extended Cost**	$ 8,13
P/N Base	SU 06004			**FileLink3**			
Suffix	AA						
Details	Rocker mount						

ItemOrder	Material	Use	UnitCost	Size1	Unit1	Size2	Unit2	Area Name	Area	Length	Density	Quantity	Sub Total
10	Steel, Mild	Stock material	$ 2,25	30	mm	30	mm	30*30mm	9,00E-04	0,055	7 860,00	1	$ 0,88
												Sub Total	**$ 0,88**

ItemOrder	Process	Use	UnitCost	Unit	Quantity	Multiplier	Mult. Val.	Sub Total
10	Machining Setup, Install and remove	Setup for machining	$ 1,30	unit	1			$ 1,30
20	Machining	Material removal	$ 0,04	cm^3	16,5	Material -Steel	3	$ 1,98
30	Drilled holes <25,4mm dia.	Holes for assembly	$ 0,35	hole	1			$ 0,35
40	Machining setup change		$ 0,65	unit	1			$ 0,65
50	Machining	Central groove	$ 0,04	cm^3	17,2	Material -Steel	3	$ 2,06
60	Machining setup change		$ 0,65	unit	1			$ 0,65
70	Machining	Tubing cavity	$ 0,04	cm^3	2,2	Material -Steel	3	$ 0,26
							Sub Total	**$ 7,26**

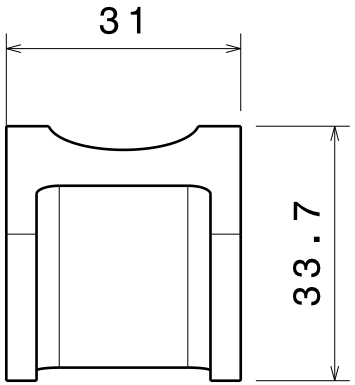

Vue de face
Echelle : 1:1

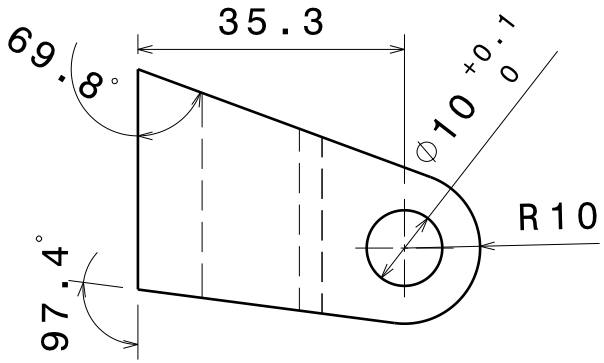

Vue de gauche
Echelle : 1:1

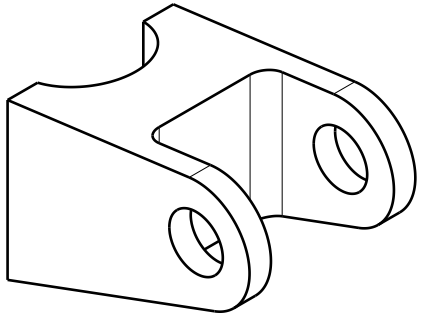

Vue isométrique
Echelle : 1:1

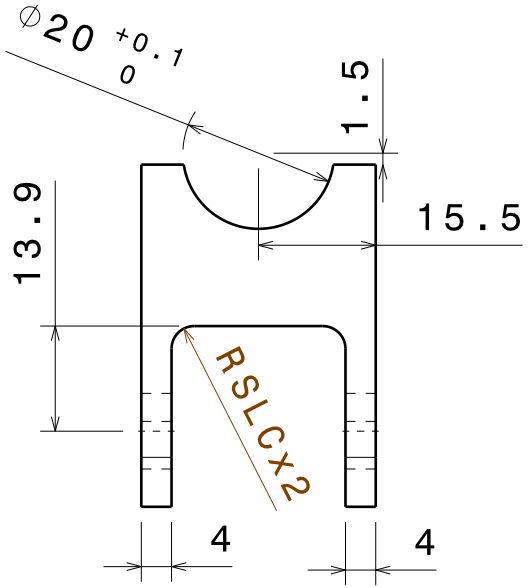

Vue de dessus
Echelle : 1:1

Tolérances générales ISO 2768 mK
RSLC 1mm<R<3mm
Brut 31*33.7*45.3

Taille A4		Ecurie Piston Sport Auto
Dessiné par Clément CASTELLAN	Date 11/12/2014	Désignation: Chape basculeur avant
Coordonnées: clement.castellan@ecl13.ec-lyon.fr 06.34.33.50.85		Quantité 1+1 / Matériau Acier S235 / Version 1.0
Plan vérifié par Fabien ROBERT 432		Echelle 1:1 / Numéro du plan 15-B-017 / Feuille 1/1

University	Ecole Centrale de Lyon			**Car #**	81	**Part Cost**	17,48
System	Suspension	**FileLink1**				**Qty**	1,00
Assembly	Front rocker	**FileLink2**		**FileLink1**			
Part	Push-rod tube	**FileLink3**		**FileLink2**		**Extended Cos**	$ 17,48
P/N Base	SU 06005			**FileLink3**			
Suffix	AA						
Details	Carbon composite tube made by fillament wirring						

ItemOrder	Material	Use	UnitCost	Size1	Unit1	Size2	Unit2	Area Name	Area	Length	Density	Quantity	Sub Total
10	Carbon Fiber, 1 Ply	Stock	$ 200,00	8	mm	6	mm	Tube	8,80E-05	0,414	2 000,00	1	$ 14,57
20	Aramid (Kevlar) Fiber, 1 Ply	Stock	$ 150,00	8	mm	30	% Area	Tube	6,24E-03	0,001	2 000,00	1	$ 0,94
												Sub Total	**$ 15,50**

ItemOrder	Process	Use	UnitCost	Unit	Quantity	Multiplier	Mult. Val.	Sub Total
10	Lamination, Fillament Wirring	Tube Lamination	$ 25,00	kg	0,07907766			$ 1,98
							Sub Total	**$ 1,98**

University	Ecole Centrale de Lyon			**Car #**	81	**Part Cost**	2,95
System	Suspension	**FileLink1**				**Qty**	2
Assembly	Front rocker	**FileLink2**		**FileLink1**			
Part	Push rod insert	**FileLink3**		**FileLink2**		**Extended Cos**	$ 5,91
P/N Base	SU 06006			**FileLink3**			
Suffix	AA						
Details							

ItemOrder	Material	Use	UnitCost	Size1	Unit1	Size2	Unit2	Area Name	Area	Length	Density	Quantity	Sub Total
10	Steel, Mild (per kg)	Steel for machining the part	$ 2,25	9,5	mm			Radius	2,84E-04	20,000	7 860,00	1	$ 1,00
												Sub Total	**$ 1,00**

ItemOrder	Process	Use	UnitCost	Unit	Quantity	Multiplier	Mult. Val.	Sub Total
10	Machining Setup, Install and remove	Setup for machining and removal	$ 1,30	unit	1			$ 1,30
20	Machining	Material removal - side view profile	$ 0,04	cm^3	2,5	Material - Steel	3	$ 0,30
30	Tapping Holes	Rod End emplacement	$ 0,35		1			$ 0,35
							Sub Total	**$ 1,95**

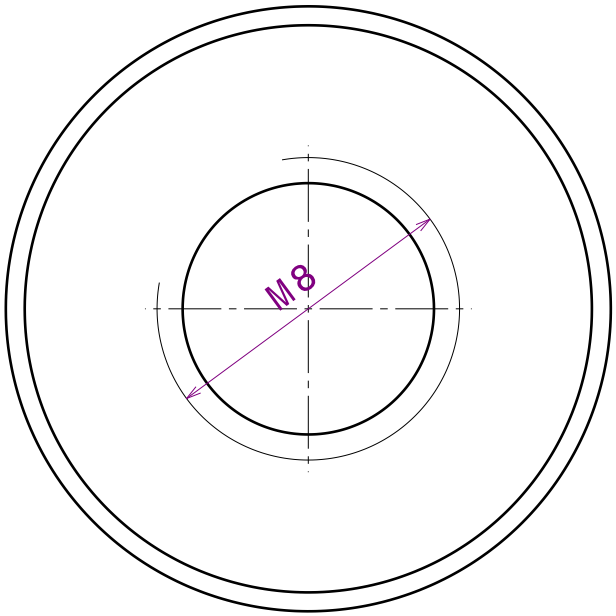

Vue de face
Echelle : 5:1

Vue de gauche
Echelle : 5:1

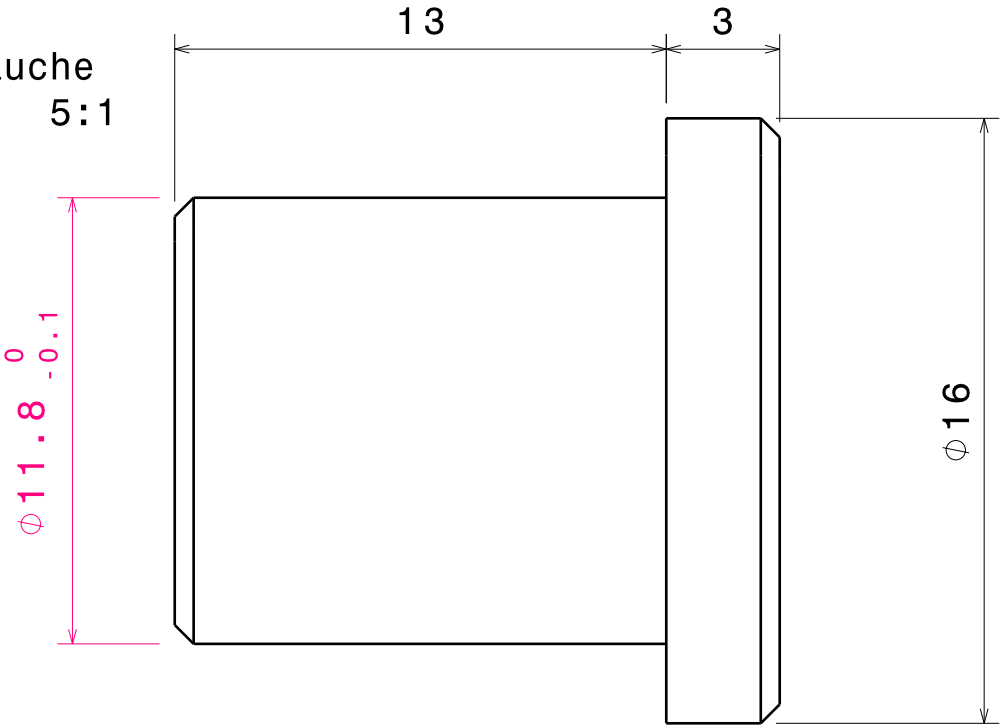

Tolérances générales ISO 2768 - mK

Chanfreins de 0.5

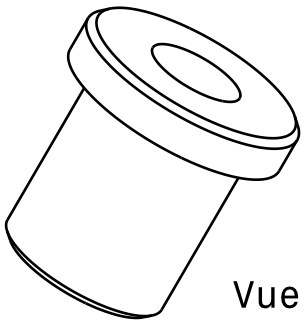

Vue isométrique
Echelle : 2:1

Taille A4		Ecurie Piston Sport Auto
Dessiné par Simon CHARAUDEAU	Date 22/12/2014	Désignation Insert taraudé M8
Coordonnées 06 25 18 15 19 simon.charaudeau@ecl13.ec-lyon.fr		Quantité 16 / Matériau Acier S235 / Version 1.0
Plan vérifié par PMR 435		Echelle 1:1 / Numéro du plan 15-B-025 / Feuille 1/1

University	Ecole Cenrale de Lyon	**Car #**	81	**Asm Cost**	356,54
System	Suspension			**Qty**	2
Assembly	Rear Suspension	**FileLink1**			
P/N Base	SU A0007	**FileLink2**		**Extended Cost**	$ 713,07
Suffix	AA	**FileLink3**			
Details	Rear Suspension				

ItemOrder	Part	Part Cost	Quantity	Sub Total
10	Dampers	$ 305,00	1	$ 305,00
20	Springs	$ 25,00	1	$ 25,00
30	Rear Suspension Mount	$ 7,99	1	$ 7,99
40	Spacer	$ 1,67	2	$ 3,33
			Sub Total	**$ 341,32**

ItemOrder	Material	Use	UnitCost	Size1	Unit1	Size2	Unit2	Area Name	Area	Length	Density	Quantity	Sub Total
10	Paint	Front suspension mount red paint	$ 10,00	0,005	m^2							1,00	$ 0,05
												Sub Total	**$ 10,00**

ItemOrder	Process	Use	UnitCost	Unit	Quantity	Multiplier	Mult. Val.	Sub Total
10	Weld	Welding the suspension mounts on the frame	$ 0,15	cm	6,28			$ 0,94
20	Aerosol apply	Painting of suspension mount in red	$ 5,25	m^2	0,005			$ 0,03
30	Assemble, 1 kg, Loose	Attaching springs to dampers	$ 0,06	unit	1			$ 0,06
40	Assemble, 1 kg, Loose	Put the damper in place	$ 0,06	unit	1			$ 0,06
50	Ratchet <= 25.4 mm	Bolt damper to suspension mount	$ 0,75	unit	1			$ 0,75
60	Reaction Tool <= 25.4 mm	Thigten the M8 nuts	$ 0,25	unit	1			$ 0,25
70	Assemble, 1 kg, Loose	Put the damper in place	$ 0,06	unit	1			$ 0,06
80	Ratchet <= 25.4 mm	Bolt damper to rocker	$ 0,75	unit	1			$ 0,75
90	Reaction Tool <= 25.4 mm	Thigten the M8 nuts	$ 0,25	unit	1			$ 0,25
							Sub Total	**$ 3,15**

ItemOrder	Fastener	Use	UnitCost	Size1	Unit1	Size2	Unit2	Quantity	Sub Total
10	Bolt,Grade 12.9 (SAE)		$ 0,33	8	mm	50	mm	1	$ 0,33
20	Bolt,Grade 12.9 (SAE)		$ 0,37	8	mm	55	mm	1	$ 0,37
30	Washer, Grade 12.9 (SAE 5)		$ 0,07	8	mm			2	$ 0,14
40	Nut, Grade 12.9		$ 0,07	8	mm			8	$ 0,56
								Sub Total	**$ 1,40**

ItemOrder	Tooling	Use	UnitCost	Unit	Quantity	PVF	FractionIncluded	Sub Total
10	Welds - Welding Fixture	Welding of the mounts the frame	$ 500,00	point	4	3000	1	$ 0,67
							Sub Total	**$ 0,67**

University	Ecole Centrale de Lyon			**Car #**	81	**Part Cost**	$ 305,00
System	Suspension	**FileLink1**				**Qty**	1
Assembly	Rear Suspension	**FileLink2**		**FileLink1**			
Part	Dampers	**FileLink3**		**FileLink2**		**Extended Cost**	$ 305,00
P/N Base	SU 07001			**FileLink3**			
Suffix	AA						
Details	Damper, Ohlins TTX 25						

ItemOrder	Material	Use	UnitCost	Size1	Unit1	Size2	Unit2	Area Name	Area	Length	Density	Quantity	Sub Total
10	Damper, Ohlins TTX 25	Dampers	$ 305,00									1,00	$ 305,00
												Sub Total	**$ 305,00**

University	Ecole Centrale de Lyon			**Car #**	81	**Part Cost**	$ 25,00
System	Suspension	**FileLink1**				**Qty**	1
Assembly	Rear Suspension	**FileLink2**		**FileLink1**			
Part	Springs	**FileLink3**		**FileLink2**		**Extended Cost**	$ 25,00
P/N Base	SU 07002			**FileLink3**			
Suffix	AA						
Details	Springs						

ItemOrder	Material	Use	UnitCost	Size1	Unit1	Size2	Unit2	Area Name	Area	Length	Density	Quantity	Sub Total
10	Suspension Springs, Coil Spring, Steel	Spring for the dampers	$ 25,00									1	$ 25,00
												Sub Total	**$ 25,00**

University	Ecole Centrale de Lyon			**Car #**	81	**Part Cost**	$ 7,99
System	Suspension	**FileLink1**				**Qty**	1
Assembly	Rear suspension	**FileLink2**		**FileLink1**			
Part	Suspension mount	**FileLink3**		**FileLink2**		**Extended Cost**	$ 7,99
P/N Base	SU 07003			**FileLink3**			
Suffix	AA						
Details	Rocker mount						

ItemOrder	Material	Use	UnitCost	Size1	Unit1	Size2	Unit2	Area Name	Area	Length	Density	Quantity	Sub Total
10	Steel, Mild	Stock material	$ 2,25	30	mm	30	mm	30*30mm	9,00E-04	0,055	7 860,00	1	$ 0,88
												Sub Total	**$ 0,88**

ItemOrder	Process	Use	UnitCost	Unit	Quantity	Multiplier	Mult. Val.	Sub Total
10	Machining Setup, Install and remove	Setup for machining	$ 1,30	unit	1			$ 1,30
20	Machining	Material removal	$ 0,04	cm^3	16,1	Material -Steel	3	$ 1,93
30	Drilled holes <25,4mm dia.	Holes for assembly	$ 0,35	hole	1			$ 0,35
40	Machining setup change		$ 0,65	unit	1			$ 0,65
50	Machining	Central groove	$ 0,04	cm^3	17,2	Material -Steel	3	$ 2,06
60	Machining setup change		$ 0,65	unit	1			$ 0,65
70	Machining	Hole	$ 0,04	cm^3	1,4	Material -Steel	3	$ 0,17
							Sub Total	**$ 7,11**

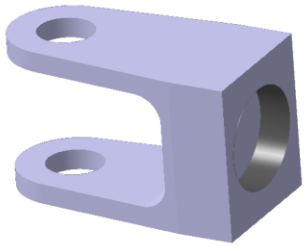

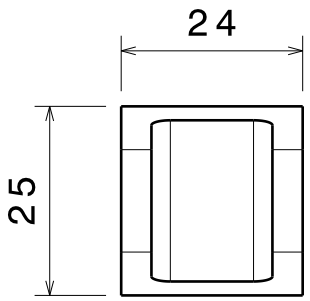

Vue de face
Echelle : 1:1

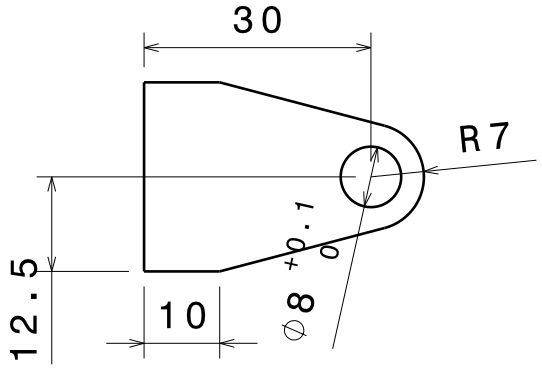

Vue de gauche
Echelle : 1:1

Vue arrière
Echelle : 1:1

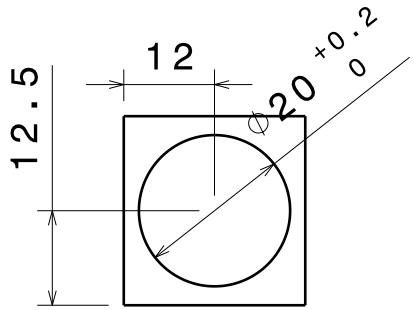

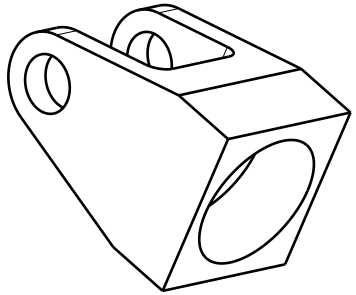

Vue isométrique
Echelle : 1:1

Tolérances générales ISO 2768 mK
Brut 24*25*37
RSLC 1mm<R<3mm

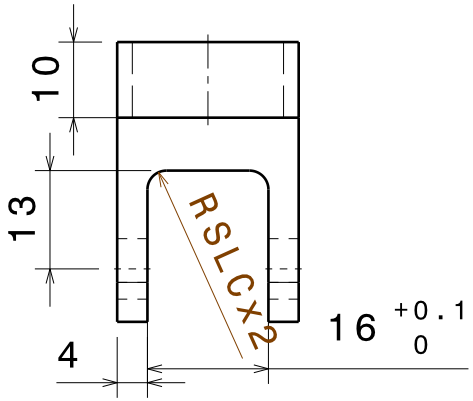

Vue de dessus
Echelle : 1:1

Taille A4		Ecurie Piston Sport Auto
Dessiné par Clément CASTELLAN	Date 11/12/2014	Désignation: Chape amortisseur arrière
Coordonnées: clement.castellan@ecl13.ec-lyon.fr 06.34.33.50.85		Quantité 1+1 / Matériau Acier S235 / Version 1.0
Plan vérifié par FRT 440		Echelle 1:1 / Numéro du plan 15-B-016 / Feuille 1/1

University	Ecole Centrale de Lyon			**Car #**	81	**Part Cost**	$ 1,67
System	Suspension	**FileLink1**				**Qty**	2
Assembly	Rear suspension	**FileLink2**		**FileLink1**			
Part	Spacer	**FileLink3**		**FileLink2**		**Extended Cost**	$ 3,33
P/N Base	SU 07004			**FileLink3**			
Suffix	AA						
Details							

ItemOrder	Material	Use	UnitCost	Size1	Unit1	Size2	Unit2	Area Name	Area	Length	Density	Quantity	Sub Total
10	Aluminium, normal (per kg)		$ 4,20	14	mm			Round 14mm	1,54E-04	0,004	2 710,00	1	$ 0,01
												Sub Total	**$ 0,01**

ItemOrder	Process	Use	UnitCost	Unit	Quantity	Multiplier	Mult. Val.	Sub Total
10	Machining Setup, Install and remove	Setup for machining	$ 1,30	unit	1			$ 1,30
20	Machining	Material removal	$ 0,04	cm^3	0,23	Material - Aluminiu	1	$ 0,01
30	Drilled holes <25,4mm dia.	Holes for assembly	$ 0,35	hole	1			$ 0,35
							Sub Total	**$ 1,66**

University	Ecole Cenrale de Lyon	**Car #**	81	**Asm Cost**	39,47
System	Suspension			**Qty**	2
Assembly	Rear rocker	**FileLink1**			
P/N Base	SU A0008	**FileLink2**		**Extended Cost**	$ 78,94
Suffix	AA	**FileLink3**			
Details	Assembly of the Rear rocker				

ItemOrder	Part	Part Cost	Quantity	Sub Total
10	Sheets metal of the Rocker	$ 0,67	2	$ 1,34
20	Cylinder	$ 0,20	1	$ 0,20
30	Bushing	$ 0,20	2	$ 0,40
40	Rocker mount	$ 14,23	1	$ 14,23
50	Push-rod tube	$ 6,46	1	$ 6,46
60	Push rod insert	$ 2,95	2	$ 5,91
			Sub Total	**$ 28,53**

ItemOrder	Material	Use	UnitCost	Size1	Unit1	Size2	Unit2	Area Name	Area	Length	Density	Quantity	Sub Total
10	Paint	Rocker mount red paint	$ 10,00	0,006	m^2							1,00	$ 0,06
20	Paint	Rocker red black paint	$ 10,00	0,014	m^2							1,00	$ 0,14
30	Adhesive	Included in process											$ -
40	Rod end, Industrial	Rod end for tie rod extremities	$ 1,94	8	mm			Balls diameter				2,00	$ 3,88
												Sub Total	**$ 4,08**

ItemOrder	Process	Use	UnitCost	Unit	Quantity	Multiplier	Mult. Val.	Sub Total
10	Weld	Welding the rocker mounts on the frame	$ 0,15	cm	5,8			$ 0,87
20	Aerosol apply	Painting of rocker mount in red	$ 5,25	m^2	0,006			$ 0,03
30	Aerosol apply	Painting of the rocker and the cylinders	$ 5,25	m^2	0,014			$ 0,07
40	Assemble, 1 kg, Interference	Insert 2 bronze bushings into the rocker	$ 0,19	unit	2			$ 0,38
50	Assemble, 1 kg, Loose	Put the rocker in place	$ 0,06	unit	1			$ 0,06
60	Ratchet <= 25.4 mm	Bolt rocker to rocker mount	$ 0,75	unit	1			$ 0,75
70	Reaction Tool <= 25.4 mm	Thigten the M8 nuts	$ 0,25	unit	1			$ 0,25
10	Brush Apply	Gluing the insert on the tube	$ 0,02	cm²	5,6	Repeat 2	2	$ 0,22
20	Ratchet	Put the nuts on the bolts	$ 0,50	unit	2			$ 1,00
30	Wrench	Put the nuts on the rod end	$ 1,00	unit	2			$ 2,00
							Sub Total	**$ 5,64**

ItemOrder	Fastener	Use	UnitCost	Size1	Unit1	Size2	Unit2	Quantity	Sub Total
10	Bolt,Grade 12.9 (SAE)	Hexagon socket headless screw	$ 0,42	8	mm	60	mm	1	$ 0,42
20	Washer, Grade 12.9 (SAE 5)		$ 0,07	8	mm			1	$ 0,07
30	Nut, Grade 12.9		$ 0,07	8	mm			1	$ 0,07
								Sub Total	**$ 0,56**

ItemOrder	Tooling	Use	UnitCost	Unit	Quantity	PVF	FractionIncluded	Sub Total
10	Welds - Welding Fixture	Welding of the mounts the frame	$ 500,00	point	4	3000	1	$ 0,67
							Sub Total	**$ 0,67**

University	Ecole Centrale de Lyon			**Car #**	81	**Part Cost**	$ 0,67
System	Suspension	**FileLink1**				**Qty**	2
Assembly	Rear rocker	**FileLink2**		**FileLink1**			
Part	Sheets metal of the Rocker	**FileLink3**		**FileLink2**		**Extended Cost**	$ 1,34
P/N Base	SU 08001			**FileLink3**			
Suffix	AA						
Details	Sheets metal of the Rocker						

ItemOrder	Material	Use	UnitCost	Size1	Unit1	Size2	Unit2	Area Name	Area	Length	Density	Quantity	Sub Total
10	Steel, Mild	Sheet metal for the rocker	$ 2,25	90	mm	70	mm	Rectangular area 90mm x 60 mm	6,30E-03	0,003	7 860	2,00	$ 0,67
												Sub Total	**$ 0,67**

ItemOrder	Process	Use	UnitCost	Unit	Quantity	Multiplier	Mult. Val.	Sub Total
10	Machining Setup, Install and remove	Install and remove parts from laser machine	$ 1,30	unit	1	Repeat 2	2	$ 2,60
20	Laser cut		$ 0,01	cm	40	Repeat 2 and Material Steel	6	$ 2,40
							Sub Total	**$ 5,00**

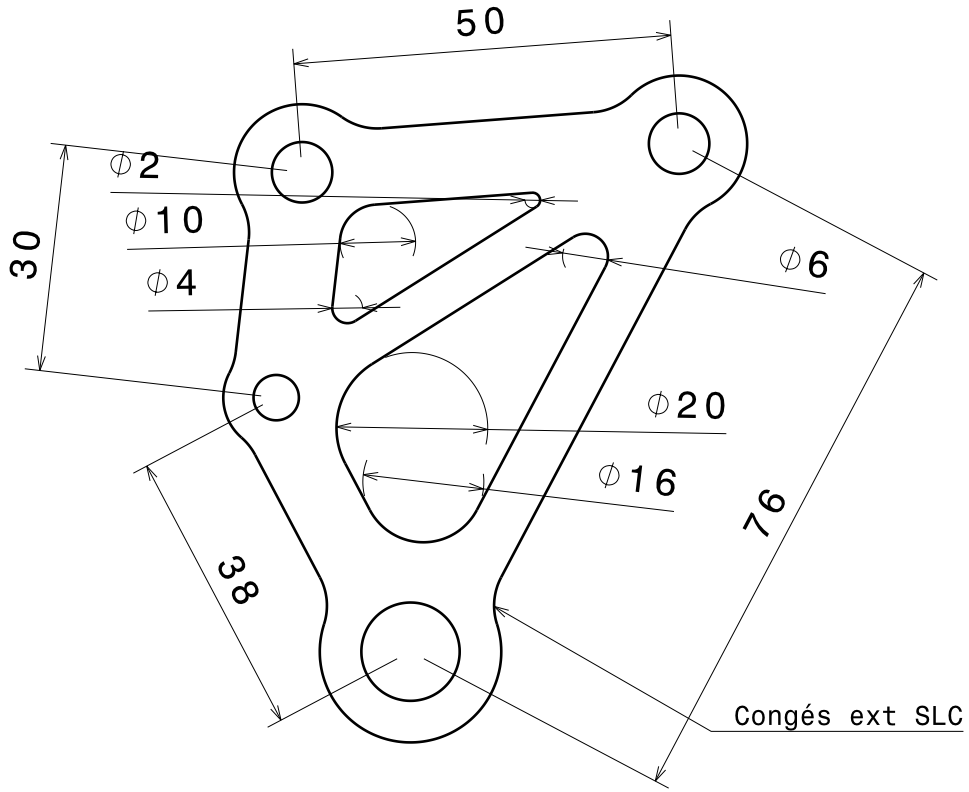

Vue de face
Echelle : 1:1

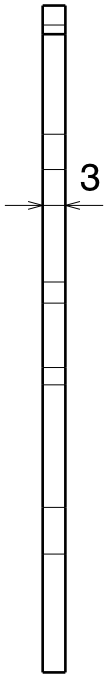

Vue de gauche
Echelle : 1:1

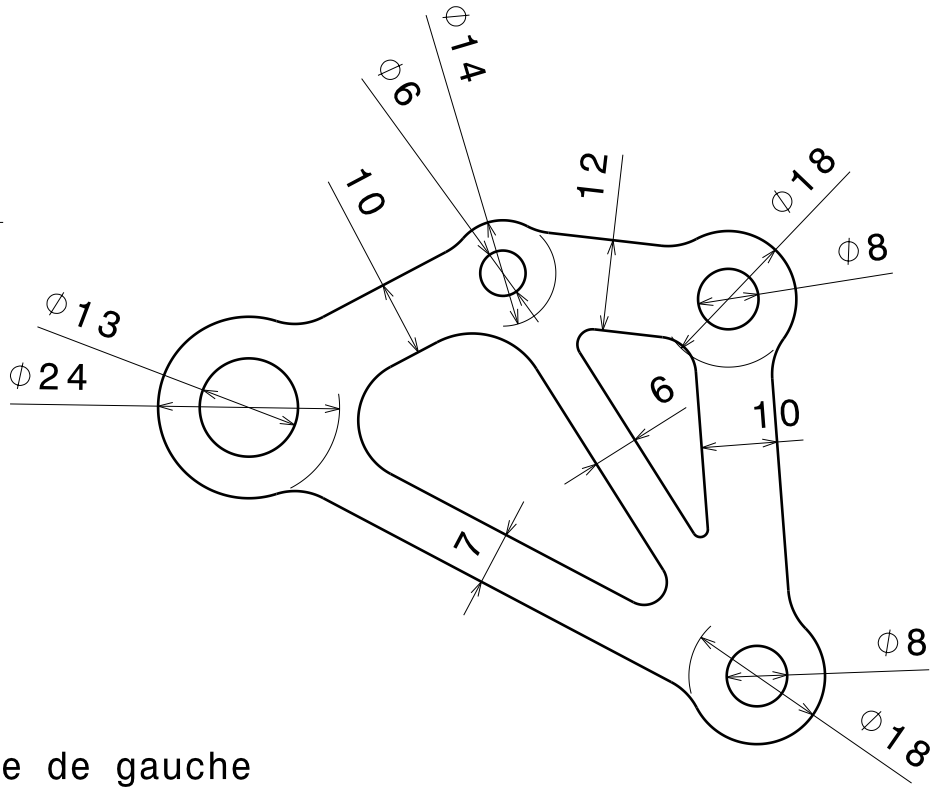

Vue de face
Echelle : 1:1

Tolérances générales ISO 2768 - mK

SLC congés ext d=16mm

Taille A4		Ecurie Piston Sport Auto
Dessiné par Romain Carré	Date 09/12/2014	Désignation Basculeur arrière
Coordonnées Tel : 06 45 59 91 01 romain.carre@ecl13.ec-lyon.fr		Quantité 4 / Matériau Acier s550 / Version 1
Plan vérifié par CCN 444		Echelle 1:1 / Numéro du plan 15-M-074 / Feuille 1/1

University	Ecole Centrale de Lyon			**Car #**	81	**Part Cost**	$ 0,20
System	Suspension	**FileLink1**				**Qty**	1
Assembly	Rear rocker	**FileLink2**		**FileLink1**			
Part	Cylinder	**FileLink3**		**FileLink2**		**Extended Cost**	$ 0,20
P/N Base	SU 08002			**FileLink3**			
Suffix	AA						
Details	Cylinder to assure the pivot linkage						

ItemOrder	Material	Use	UnitCost	Size1	Unit1	Size2	Unit2	Area Name	Area	Length	Density	Quantity	Sub Total
10	Steel, Mild	Stock material for cylinder	$ 2,25	13	mm			Round Area ra	8,00E-04	0,014	7860	1	$ 0,20
												Sub Total	**$ 0,20**

ItemOrder	Process	Use	UnitCost	Unit	Quantity	Multiplier	Mult. Val.	Sub Total
10	Machining Setup, Install and remove	Install and remove parts	$ 1,30	unit	1			$ 1,30
20	Machining	Outer profile	$ 0,04	cm^3	2	Material steel	3	$ 0,22
30	Drilled holes < 25.4 mm dia.	Hole for the pivot	$ 0,35	hole	1			$ 0,35
							Sub Total	**$ 1,87**

University	Ecole Centrale de Lyon			**Car #**	81	**Part Cost**	$ 1,32
System	Suspension	**FileLink1**				**Qty**	2
Assembly	Rear rocker	**FileLink2**		**FileLink1**			
Part	Bushing	**FileLink3**		**FileLink2**		**Extended Cost**	$ 2,65
P/N Base	SU 08003			**FileLink3**			
Suffix	AA						
Details	Bushing						

ItemOrder	Material	Use	UnitCost	Size1	Unit1	Size2	Unit2	Area Name	Area	Length	Density	Quantity	Sub Total
10	Bronze (per kg)	Stock material for bushings	$ 2,20	5	mm			Round area, r	0	0,01	6 400,00	1	$ 0,01
												Sub Total	**$ 0,01**

ItemOrder	Process	Use	UnitCost	Unit	Quantity	Multiplier	Mult. Val.	Sub Total
	Machining Setup, Install and remove	Setup machining (turning) and	$ 1,30	unit	1			$ 1,30
	Machining	Machining of the bushing (tur	$ 0,04	cm^3	0	Material Bronze	1,33	$ 0,01
							Sub Total	**$ 1,31**

University	Ecole Centrale de Lyon			**Car #**	81	**Part Cost**	$ 14,23
System	Suspension	**FileLink1**				**Qty**	1
Assembly	Rear rocker	**FileLink2**		**FileLink1**			
Part	Rocker mount	**FileLink3**		**FileLink2**		**Extended Cost**	$ 14,23
P/N Base	SU 08004			**FileLink3**			
Suffix	AA						
Details	Rocker mount						

ItemOrder	Material	Use	UnitCost	Size1	Unit1	Size2	Unit2	Area Name	Area	Length	Density	Quantity	Sub Total
10	Steel, Mild	Stock material	$ 2,25	30	mm	30	mm	30*30mm	9,00E-04	0,055	7 860,00	1	$ 0,88
												Sub Total	**$ 7,11**

ItemOrder	Process	Use	UnitCost	Unit	Quantity	Multiplier	Mult. Val.	Sub Total
10	Machining Setup, Install and remove	Setup for machining	$ 1,30	unit	1			$ 1,30
20	Machining	Material removal	$ 0,04	cm^3	16,1	Material -Steel	3	$ 1,93
30	Drilled holes <25,4mm dia.	Holes for assembly	$ 0,35	hole	1			$ 0,35
40	Machining setup change		$ 0,65	unit	1			$ 0,65
50	Machining	Central groove	$ 0,04	cm^3	17,2	Material -Steel	3	$ 2,06
60	Machining setup change		$ 0,65	unit	1			$ 0,65
70	Machining	Hole	$ 0,04	cm^3	1,4	Material -Steel	3	$ 0,17
							Sub Total	**$ 7,11**

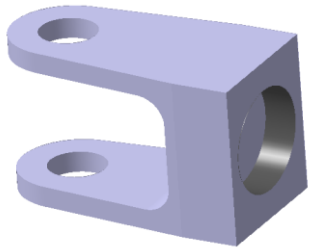

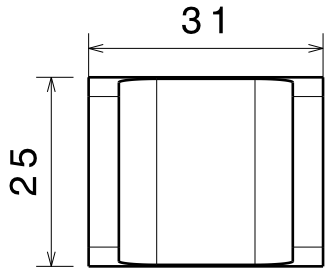

Vue de face
Echelle : 1:1

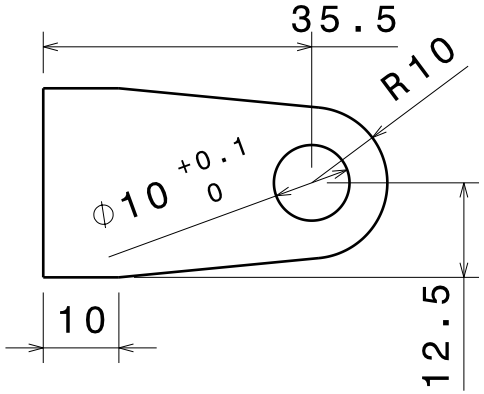

Vue de gauche
Echelle : 1:1

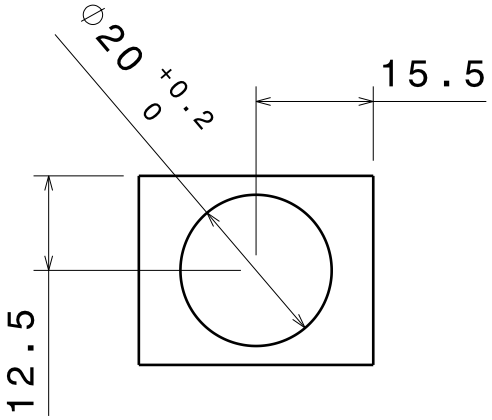

Vue arrière
Echelle : 1:1

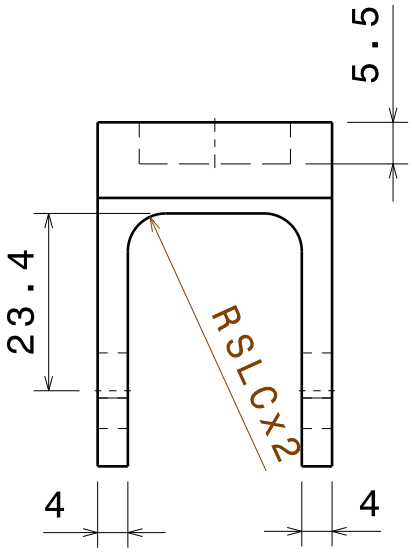

Vue de dessus
Echelle : 1:1

Tolérances générales ISO 2768 mK
Brut 31*25*45.5
RSLC 1mm<R<5mm

Taille A4		Ecurie Piston Sport Auto
Dessiné par Clément CASTELLAN	Date 11/12/2014	Désignation: Chape basculeur arrière
Coordonnées: clement.castellan@ecl13.ec-lyon.fr 06.34.33.50.85		Quantité 1+1 / Matériau Acier S235 / Version 1.0
Plan vérifié par FRT 448		Echelle 1:1 / Numéro du plan 15-B-018 / Feuille 1/1

University	Ecole Centrale de Lyon			**Car #**	81	**Part Cost**	6,46
System	Suspension	**FileLink1**				**Qty**	1,00
Assembly	Rear rocker	**FileLink2**		**FileLink1**			
Part	Push-rod tube	**FileLink3**		**FileLink2**		**Extended Cos**	$ 6,46
P/N Base	SU 08005			**FileLink3**			
Suffix	AA						
Details	Carbon composite tube made by fillament wirring						

ItemOrder	Material	Use	UnitCost	Size1	Unit1	Size2	Unit2	Area Name	Area	Length	Density	Quantity	Sub Total
10	Carbon Fiber, 1 Ply	Stock	$ 200,00	8	mm	6	mm	Tube	8,80E-05	0,153	2 000,00	1	$ 5,38
20	Aramid (Kevlar) Fiber, 1 Ply	Stock	$ 150,00	8	mm	30	% Area	Tube	2,31E-03	0,001	2 000,00	1	$ 0,35
												Sub Total	**$ 5,73**

ItemOrder	Process	Use	UnitCost	Unit	Quantity	Multiplier	Mult. Val.	Sub Total
10	Lamination, Fillament Wirring	Tube Lamination	$ 25,00	kg	0,02922435			$ 0,73
							Sub Total	**$ 0,73**

University	Ecole Centrale de Lyon			**Car #**	81	**Part Cost**	2,95
System	Suspension	**FileLink1**				**Qty**	2
Assembly	Rear rocker	**FileLink2**		**FileLink1**			
Part	Push rod insert	**FileLink3**		**FileLink2**		**Extended Cos**	$ 5,91
P/N Base	SU 08006			**FileLink3**			
Suffix	AA						
Details							

ItemOrder	Material	Use	UnitCost	Size1	Unit1	Size2	Unit2	Area Name	Area	Length	Density	Quantity	Sub Total
10	Steel, Mild (per kg)	Steel for machining the part	$ 2,25	9,5	mm			Radius	2,84E-04	20,000	7 860,00	1	$ 1,00
												Sub Total	**$ 1,00**

ItemOrder	Process	Use	UnitCost	Unit	Quantity	Multiplier	Mult. Val.	Sub Total
10	Machining Setup, Install and remove	Setup for machining and removal	$ 1,30	unit	1			$ 1,30
20	Machining	Material removal - side view profile	$ 0,04	cm^3	2,5	Material - Steel	3	$ 0,30
30	Tapping Holes	Rod End emplacement	$ 0,35		1			$ 0,35
							Sub Total	**$ 1,95**

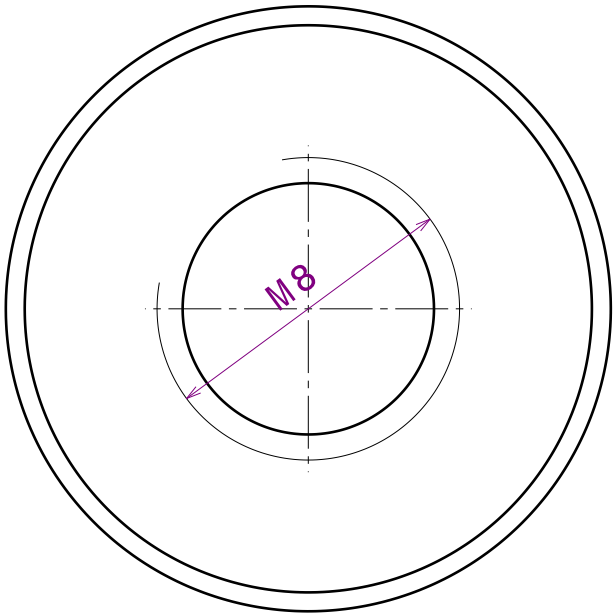

Vue de face
Echelle : 5:1

Vue de gauche
Echelle : 5:1

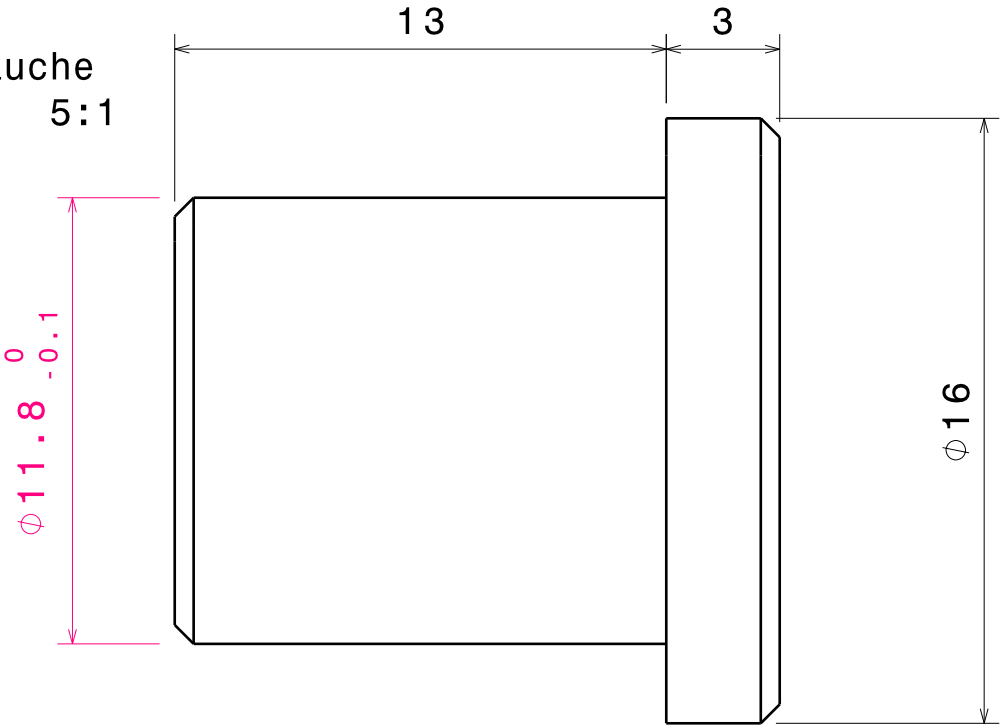

Tolérances générales ISO 2768 - mK

Chanfreins de 0.5

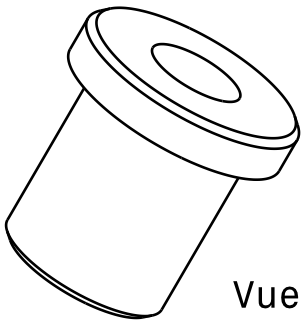

Vue isométrique
Echelle : 2:1

Taille A4		Ecurie Piston Sport Auto
Dessiné par Simon CHARAUDEAU	Date 22/12/2014	Désignation Insert taraudé M8
Coordonnées 06 25 18 15 19 simon.charaudeau@ecl13.ec-lyon.fr		
Plan vérifié par PMR 451		Quantité 16 / Matériau Acier S235 / Version 1.0
		Echelle 1:1 / Numéro du plan 15-B-025 / Feuille 1/1

University	Ecole Cenrale de Lyon	**Car #**	81	**Asm Cost**	35,69
System	Suspension			**Qty**	2
Assembly	Rear tie rod	**FileLink1**			
P/N Base	SU A0009	**FileLink2**		**Extended Cost**	$ 71,37
Suffix	AA	**FileLink3**			
Details					

ItemOrder	Part	Part Cost	Quantity	Sub Total
10	Tie-rod mount	$ 8,12	1	$ 8,12
20	Tie Rod Tube	$ 12,20	1	$ 12,20
30	Tie Rod Insert	$ 2,95	2	$ 5,91
			Sub Total	**$ 26,23**

ItemOrder	Material	Use	UnitCost	Size1	Unit1	Size2	Unit2	Area Name	Area	Length	Density	Quantity	Sub Total
10	Adhesive	Included in process											$ -
11	Rod end, Industrial	Rod end for tie rod extremities	$ 1,94	6	mm			Balls diameter				2,00	$ 3,88
												Sub Total	**$ 3,88**

ItemOrder	Process	Use	UnitCost	Unit	Quantity	Multiplier	Mult. Val.	Sub Total
10	Brush Apply	Gluing the insert on the tube	$ 0,02	cm²	5,6	Repeat 2	2	$ 0,22
20	Ratchet	Put the nuts on the bolts	$ 0,50	unit	2			$ 1,00
30	Wrench	Put the nuts on the rod end	$ 1,00	unit	2			$ 2,00
40	Weld	Welding the mount on the frame	$ 0,15	cm	8,6			$ 1,29
							Sub Total	**$ 4,51**

ItemOrder	Fastener	Use	UnitCost	Size1	Unit1	Size2	Unit2	Quantity	Sub Total
10	Bolt, grade 8.8 (SAE 5)	Bolt linking to rack and wheel	$ 0,12	6	mm	50	mm	2	$ 0,24
20	Nut, grade 8.8 (SAE 5)	Nut to lock bearing	$ 0,03	6	mm			2	$ 0,06
30	Nut, grade 8.8 (SAE 5)	Nuts for bolts	$ 0,03	6	mm			2	$ 0,06
40	Washer, grade 8.8 (SAE 5)	Washers for bolt	$ 0,01		mm			4	$ 0,04
								Sub Total	**$ 0,40**

ItemOrder	Tooling	Use	UnitCost	Unit	Quantity	PVF	FractionIncluded	Sub Total
10	Welds - Welding Fixture	Exemple de Tooling	$ 500,00	point	4	3000	1	$ 0,67
							Sub Total	**$ 0,67**

University	Ecole Centrale de Lyon			**Car #**	81	**Part Cost**	$ 8,12
System	Suspension	**FileLink1**				**Qty**	1
Assembly	Rear tie rod	**FileLink2**		**FileLink1**			
Part	Tie-rod mount	**FileLink3**		**FileLink2**		**Extended Cost**	$ 8,12
P/N Base	SU 09001			**FileLink3**			
Suffix	AA						
Details	Left and right mounts are symetrical : Same manufacturing procedure						

ItemOrder	Material	Use	UnitCost	Size1	Unit1	Size2	Unit2	Area Name	Area	Length	Density	Quantity	Sub Total
10	Steel, Mild	Stock material	$ 2,25	25	mm	25	mm	Rectangular 25*25mm	6,25E-04	0,055	7 860,00	1	$ 0,61
												Sub Total	**$ 0,61**

ItemOrder	Process	Use	UnitCost	Unit	Quantity	Multiplier	Mult. Val.	Sub Total
10	Machining Setup, Install and remove	Setup for machining	$ 1,30	unit	1			$ 1,30
20	Machining	Material removal	$ 0,04	cm^3	17,2	Material -Steel	3	$ 2,06
30	Drilled holes <25,4mm dia.	Holes for assembly	$ 0,35	hole	1			$ 0,35
40	Machining setup change		$ 0,65	unit	1			$ 0,65
50	Machining	Central groove	$ 0,04	cm^3	18,3	Material -Steel	3	$ 2,20
60	Machining setup change		$ 0,65	unit	1			$ 0,65
70	Machining	Tubing cavity	$ 0,04	cm^3	2,5	Material -Steel	3	$ 0,30
							Sub Total	**$ 7,51**

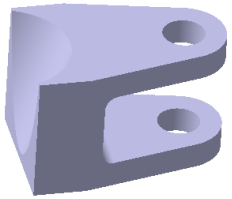

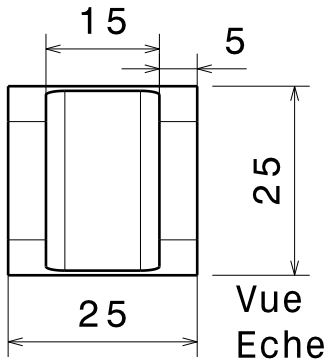

Vue de dessous
Echelle : 1:1

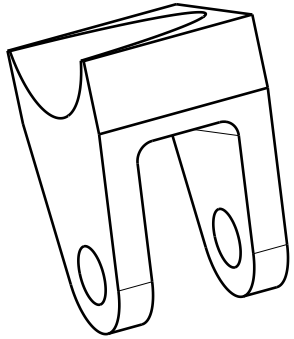

Vue isométrique
Echelle : 1:1

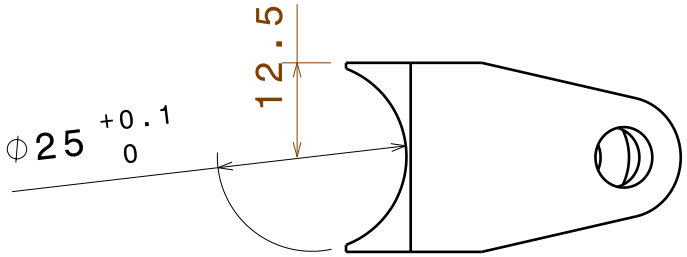

Vue auxiliaire de face
Echelle : 1:1

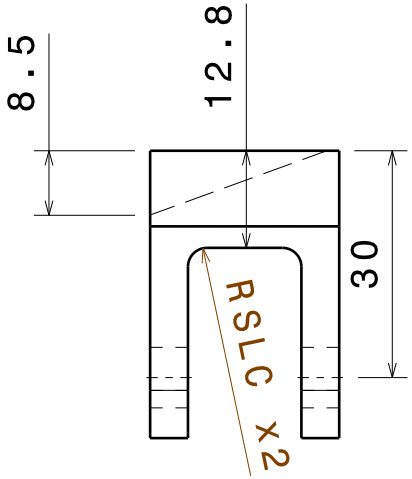

Vue de face
Echelle : 1:1

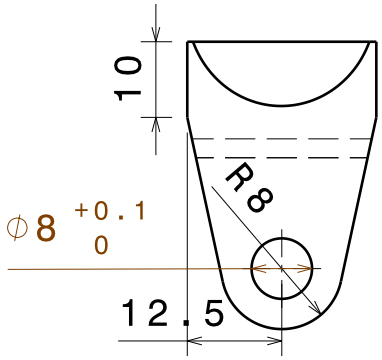

Brut 38*25*25

Vue de gauche
Echelle : 1:1

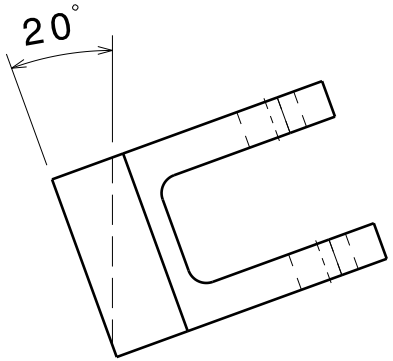

Vue aux. de dessus
Echelle : 1:1

R SLC=1mm<R<3mm

Tolérances générales
ISO 2768 mK

Taille A4		Ecurie Piston Sport Auto
Dessiné par Pierre Merlier	Date 26/11/2014	Désignation: Chape LAS tie rod
Coordonnées 06 34 50 32 42 pierre.merlier@ecl13.ec-lyon.fr		Quantité 1+1 / Matériau Acier S235 / Version 1.0
Plan vérifié par CCN 454		Echelle 1:1 / Numéro du plan 15-B-043 / Feuille 1/1

University	Ecole Centrale de Lyon			**Car #**	81	**Part Cost**	12,20
System	Steering SystemSuspension	**FileLink1**				**Qty**	1,00
Assembly	Rear tie rod	**FileLink2**		**FileLink1**			
Part	Tie Rod Tube	**FileLink3**		**FileLink2**		**Extended Cos**	$ 12,20
P/N Base	SU 09002			**FileLink3**			
Suffix	AA						
Details	Carbon composite tube made by fillament wirring						

ItemOrder	Material	Use	UnitCost	Size1	Unit1	Size2	Unit2	Area Name	Area	Length	Density	Quantity	Sub Total
10	Carbon Fiber, 1 Ply	Stock	$ 200,00	8	mm	6	mm	Tube	8,80E-05	0,289	2 000,00	1	$ 10,17
20	Aramid (Kevlar) Fiber, 1 Ply	Stock	$ 150,00	8	mm	30	% Area	Tube	4,36E-03	0,001	2 000,00	1	$ 0,65
												Sub Total	**$ 10,82**

ItemOrder	Process	Use	UnitCost	Unit	Quantity	Multiplier	Mult. Val.	Sub Total
10	Lamination, Fillament Wirring	Tube Lamination	$ 25,00	kg	0,05520155			$ 1,38
							Sub Total	**$ 1,38**

University	Ecole Centrale de Lyon			**Car #**	81	**Part Cost**	2,95
System	Suspension	**FileLink1**				**Qty**	2
Assembly	Rear tie rod	**FileLink2**		**FileLink1**			
Part	Tie Rod Insert	**FileLink3**		**FileLink2**		**Extended Cos**	$ 5,91
P/N Base	SU 09003			**FileLink3**			
Suffix	AA						
Details							

ItemOrder	Material	Use	UnitCost	Size1	Unit1	Size2	Unit2	Area Name	Area	Length	Density	Quantity	Sub Total
10	Steel, Mild (per kg)	Steel for machining the part	$ 2,25	9,5	mm			Radius	2,84E-04	20,000	7 860,00	1	$ 1,00
												Sub Total	**$ 1,00**

ItemOrder	Process	Use	UnitCost	Unit	Quantity	Multiplier	Mult. Val.	Sub Total
10	Machining Setup, Install and remove	Setup for machining and removal	$ 1,30	unit	1			$ 1,30
20	Machining	Material removal - side view profile	$ 0,04	cm^3	2,5	Material - Steel	3	$ 0,30
30	Tapping Holes	Rod End emplacement	$ 0,35		1			$ 0,35
							Sub Total	**$ 1,95**

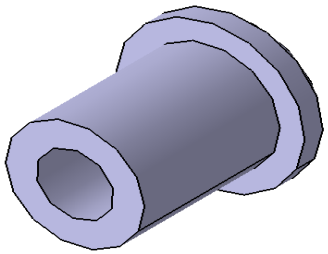

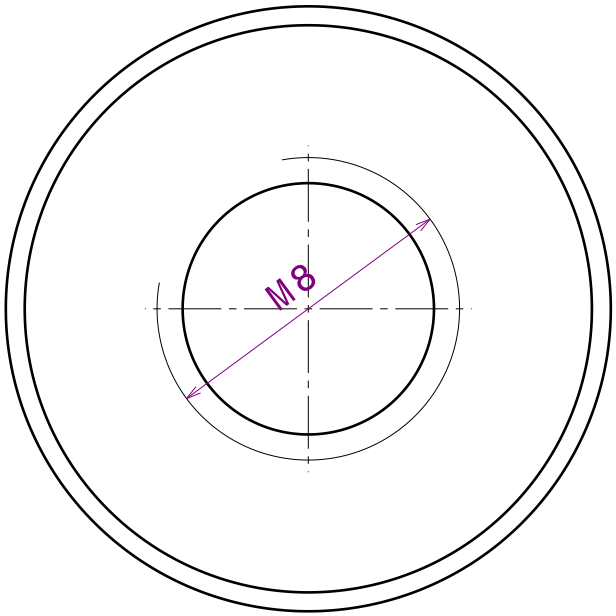

Vue de face
Echelle : 5:1

Vue de gauche
Echelle : 5:1

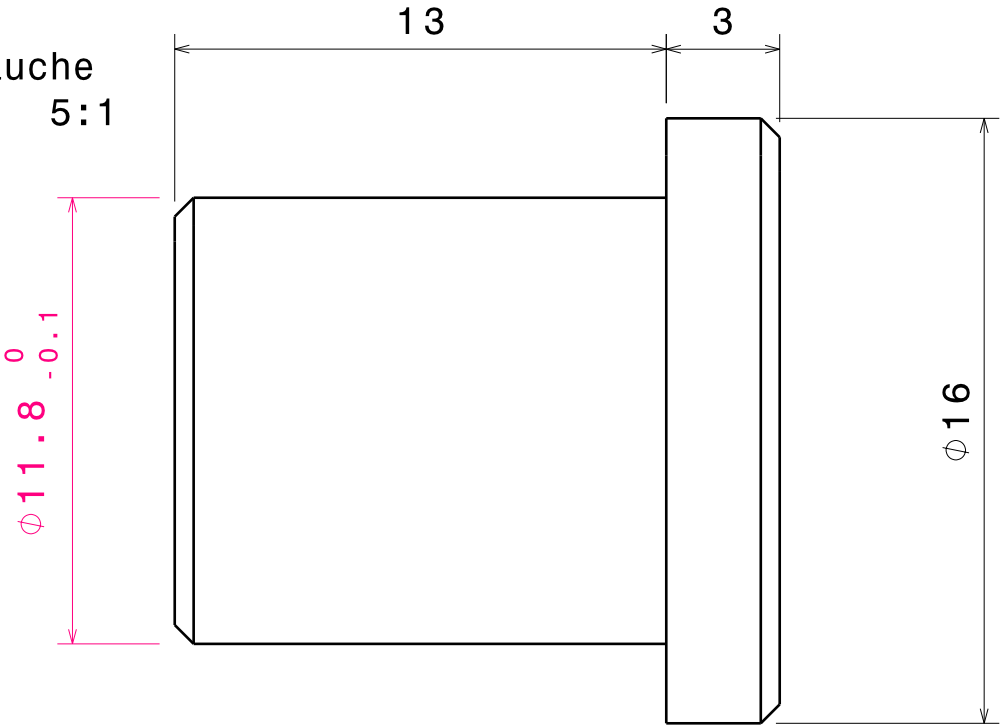

Tolérances générales ISO 2768 - mK

Chanfreins de 0.5

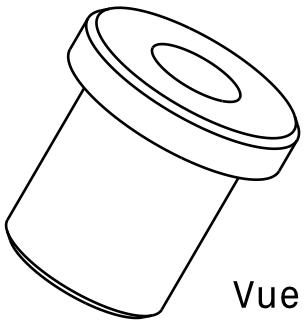

Vue isométrique
Echelle : 2:1

Taille A4		Ecurie Piston Sport Auto
Dessiné par Simon CHARAUDEAU	Date 22/12/2014	Désignation Insert taraudé M8
Coordonnées 06 25 18 15 19 simon.charaudeau@ecl13.ec-lyon.fr		Quantité 16 / Matériau Acier S235 / Version 1.0
Plan vérifié par PMR 457		Echelle 1:1 / Numéro du plan 15-B-025 / Feuille 1/1

University	Ecole Cenrale de Lyon	**Car #**	81	**Asm Cost**	39,48
System	Suspension			**Qty**	1
Assembly	Front Anti Roll System	**FileLink1**			
P/N Base	SU A0010	**FileLink2**		**Extended Cost**	$ 39,48
Suffix	AA	**FileLink3**			
Details	Front Anti Roll System				

ItemOrder	Part	Part Cost	Quantity	Sub Total
10	Front Sway Bar	$ 7,98	1	$ 7,98
20	Front Lever	$ 2,06	2	$ 4,13
30	Front Roll Bar mount inf	$ 1,37	2	$ 2,75
40	Front Roll Bar mount sup	$ 4,58	2	$ 9,16
50	Bushing	$ 1,32	4	$ 5,30
60	Push-rod tube	$ 13,02	2	$ 26,04
70	Push rod insert	$ 2,75	4	$ 11,01
			Sub Total	**$ 29,31**

ItemOrder	Material	Use	UnitCost	Size1	Unit1	Size2	Unit2	Area Name	Area	Length	Density	Quantity	Sub Total
10	Paint	Front Roll bar mount sup red paint	$ 10,00	0,004	m^2							1,00	$ 0,04
												Sub Total	**$ 0,04**

ItemOrder	Process	Use	UnitCost	Unit	Quantity	Multiplier	Mult. Val.	Sub Total
10	Weld	Welding the roll bar mounts on the frame	$ 0,15	cm	6,2			$ 0,93
20	Aerosol apply	Painting of suspension mount in red	$ 5,25	m^2	0,004			$ 0,02
30	Assemble, 1 kg, Interference	Insert 2 bronze bushings into the rocker	$ 0,19	unit	4			$ 0,76
40	Assemble, 1 kg, Loose	assemble sway bar and the 2 mounts sup	$ 0,06	unit	2			$ 0,12
50	Weld	Welding the 4 lever on the roll bar	$ 0,15	cm	4			$ 0,60
60	Ratchet <= 25.4 mm	Bolt mount sup on mount inf	$ 0,75	unit	2			$ 1,50
70	Reaction Tool <= 25.4 mm	Thigten the M6 nuts	$ 0,25	unit	2			$ 0,50
80	Brush Apply	Gluing the insert on the tube	$ 0,02	cm²	5,6	Repeat 2	2	$ 0,22
90	Ratchet	Put the nuts on the bolts	$ 0,50	unit	2			$ 1,00
100	Wrench	Put the nuts on the rod end	$ 1,00	unit	2			$ 2,00
							Sub Total	**$ 7,66**

ItemOrder	Fastener	Use	UnitCost	Size1	Unit1	Size2	Unit2	Quantity	Sub Total
10	Bolt,Grade 12.9 (SAE)		$ 0,33	6	mm	35	mm	1	$ 0,33
20	Washer, Grade 12.9 (SAE 5)		$ 0,07	6	mm			2	$ 0,14
								Sub Total	**$ 0,47**

ItemOrder	Tooling	Use	UnitCost	Unit	Quantity	PVF	FractionIncluded	Sub Total
10	Welds - Welding Fixture	Welding of the mounts the frame	$ 500,00	point	4	3000	1	$ 0,67
20	Welds - Welding Fixture	Welding of the lever on the sway bar	$ 500,00	point	8	3000	1	$ 1,33
							Sub Total	**$ 2,00**

University	Ecole Centrale de Lyon			**Car #**	81	**Part Cost**	$ 7,98
System	Suspension	**FileLink1**				**Qty**	1
Assembly	Front Anti Roll System	**FileLink2**		**FileLink1**			
Part	Front Sway Bar	**FileLink3**		**FileLink2**		**Extended Cost**	$ 7,98
P/N Base	SU 10001			**FileLink3**			
Suffix	AA						
Details	Front Sway Bar						

ItemOrder	Material	Use	UnitCost	Size1	Unit1	Size2	Unit2	Area Name	Area	Length	Density	Quantity	Sub Total
10	Steel, Mild	Stock material for cylinder	$ 2,25	12	mm	9	mm	Round Area 12*1,5mm	1,98E-04	0,700	7860	1	$ 2,45
												Sub Total	**$ 2,45**

ItemOrder	Process	Use	UnitCost	Unit	Quantity	Multiplier	Mult. Val.	Sub Total
10	Machining Setup, Install and remove	cutting	$ 1,30	unit	1			$ 1,30
20	Laser Cut	Cutout shape	$ 0,01	cm	136	Material - Cast Iron	2,5	$ 3,40
							Sub Total	**$ 4,70**

ItemOrder	Tooling	Use	UnitCost	Unit	Quantity	PVF	FracIncld	Sub Total
10	Welds - Welding Fixture	Exemple de Tooling	$ 500,00	point	5	3000	1	$ 0,83
							Sub Total	**$ 0,83**

University	Ecole Centrale de Lyon			**Car #**	81	**Part Cost**	$ 2,06
System	Suspension	**FileLink1**				**Qty**	1
Assembly	Front Anti Roll System	**FileLink2**		**FileLink1**			
Part	Front Lever	**FileLink3**		**FileLink2**		**Extended Cost**	$ 2,06
P/N Base	SU 10002			**FileLink3**			
Suffix	AA						
Details	Front Lever						

ItemOrder	Material	Use	UnitCost	Size1	Unit1	Size2	Unit2	Area Name	Area	Length	Density	Quantity	Sub Total
10	Steel, Mild (per kg)	Stock material for part	$ 2,25	103	mm	30		Rectangle are	3,09E-03	0,003	7860	1	$ 0,16
												Sub Total	**$ 0,16**

ItemOrder	Process	Use	UnitCost	Unit	Quantity	Multiplier	Mult. Val.	Sub Total
10	Machining Setup, Install and remove	Setup for laser cutting	$ 1,30	unit	1			$ 1,30
20	Laser Cut		$ 0,01	cm	20	Material - Steel	3	$ 0,60
							Sub Total	**$ 1,90**

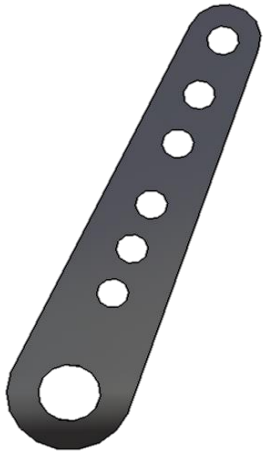

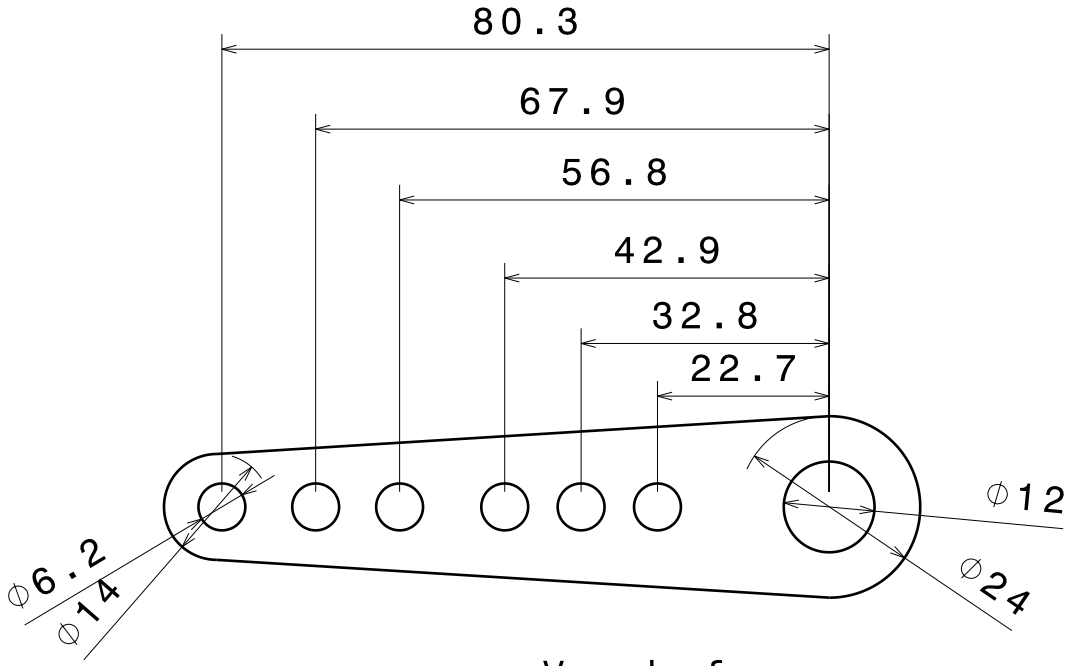

Vue de face
Echelle : 1:1

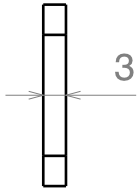

Vue de gauche
Echelle : 1:1

Tolérances générales ISO 2768 - mK

Taille A4		Ecurie Piston Sport Auto
Dessiné par Romain Carré	Date 16/12/2014	Désignation Levier avant
Coordonnées Tel : 06 45 59 91 01 romain.carre@ecl13.ec-lyon.fr		Quantité 4 / Matériau Acier S550 / Version 1
Plan vérifié par CCN 461		Echelle 1:1 / Numéro du plan 15-M-075 / Feuille 1/1

University	Ecole Centrale de Lyon			**Car #**	81	**Part Cost**	$ 1,37
System	Suspension	**FileLink1**				**Qty**	2
Assembly	Front Anti Roll System	**FileLink2**		**FileLink1**			
Part	Front Roll Bar mount inf	**FileLink3**		**FileLink2**		**Extended Cost**	$ 2,75
P/N Base	SU 10003			**FileLink3**			
Suffix	AA						
Details	Front Roll Bar mount inf						

ItemOrder	Material	Use	UnitCost	Size1	Unit1	Size2	Unit2	Area Name	Area	Length	Density	Quantity	Sub Total
10	Steel, Mild (per kg)	Stock material for part	$ 2,25	65	mm	32		Rectangle are	2,08E-03	0,002	7860	1	$ 0,07
												Sub Total	**$ 0,07**

ItemOrder	Process	Use	UnitCost	Unit	Quantity	Multiplier	Mult. Val.	Sub Total
10	Machining Setup, Install and remove	Setup for laser cutting	$ 1,30	unit	1			$ 1,30
							Sub Total	**$ 1,30**

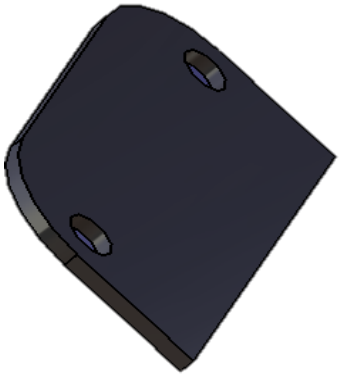

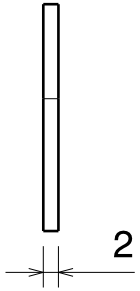

Vue de droite
Echelle : 1:1

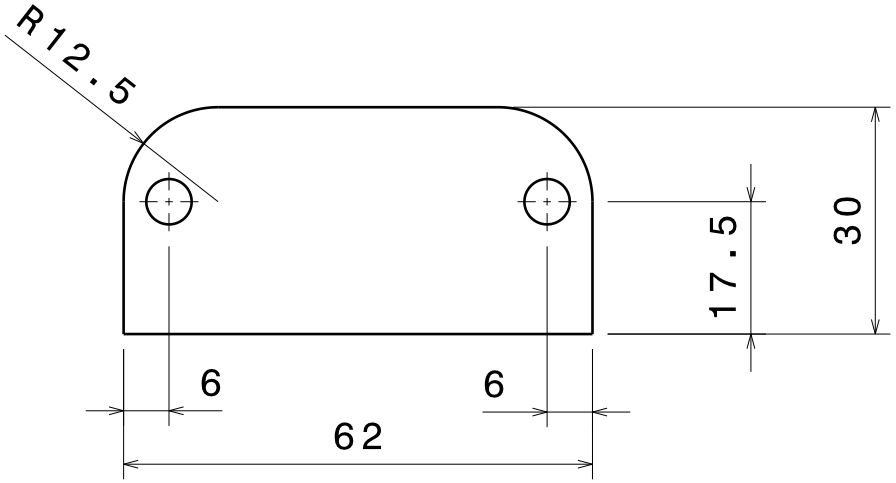

Vue de face
Echelle : 1:1

Tolérances géométriques ISO 2768 - mK

Taille A4		Ecurie Piston Sport Auto
Dessiné par Martin Z	Date 12/12/2014	Désignation: Chape fixation BAR avant
Coordonnées 06 45 59 91 01 romain.carre@ecl13.ec-lyon.fr	Quantité 2	Matériau Acier S 235 / Version 1.0
Plan vérifié par RCE 463	Echelle 1:1	Numéro du plan 15-M-072 / Feuille 1/1

University	Ecole Centrale de Lyon			**Car #**	81	**Part Cost**	$ 4,58
System	Suspension	**FileLink1**				**Qty**	2
Assembly	Front Anti Roll System	**FileLink2**		**FileLink1**			
Part	Front Roll Bar mount sup	**FileLink3**		**FileLink2**		**Extended Cost**	$ 9,16
P/N Base	SU 10004			**FileLink3**			
Suffix	AA						
Details	Front Roll Bar mount sup						

ItemOrder	Material	Use	UnitCost	Size1	Unit1	Size2	Unit2	Area Name	Area	Length	Density	Quantity	Sub Total
10	Aluminum, Normal	Mounts material	$ 4,20	50	mm	30	mm	Rectangular area 50mm x	0,00260	0,030	2 710,00	1	$ 0,89
												Sub Total	**$ 0,89**

ItemOrder	Process	Use	UnitCost	Unit	Quantity	Multiplier	Mult. Val.	Sub Total
10	Machining Setup, Install and remove	Setup for machining	$ 1,30	unit	1			$ 1,30
20	Machining	Material removal	$ 0,04	cm^3	25	Material -Alu	1	$ 1,00
30	Drilled holes <25,4mm dia.	Central hole	$ 0,35	hole	2			$ 0,70
40	Machining setup change		$ 0,65	unit	1			$ 0,65
50	Drilled holes <25,4mm dia.	Holes for assembly	$ 0,04	cm^3	1	Material -Alu	1	$ 0,04
							Sub Total	**$ 3,69**

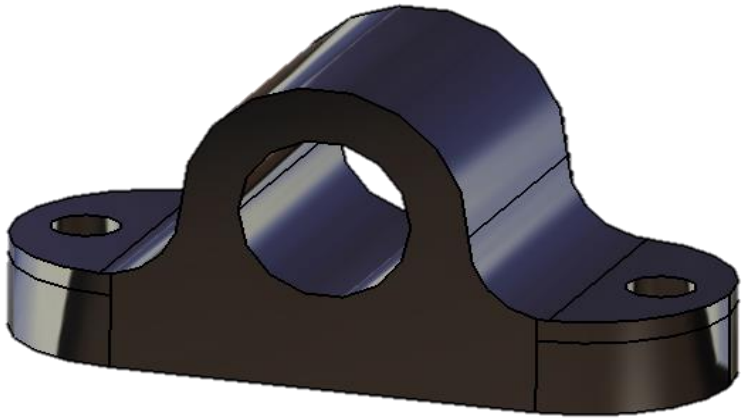

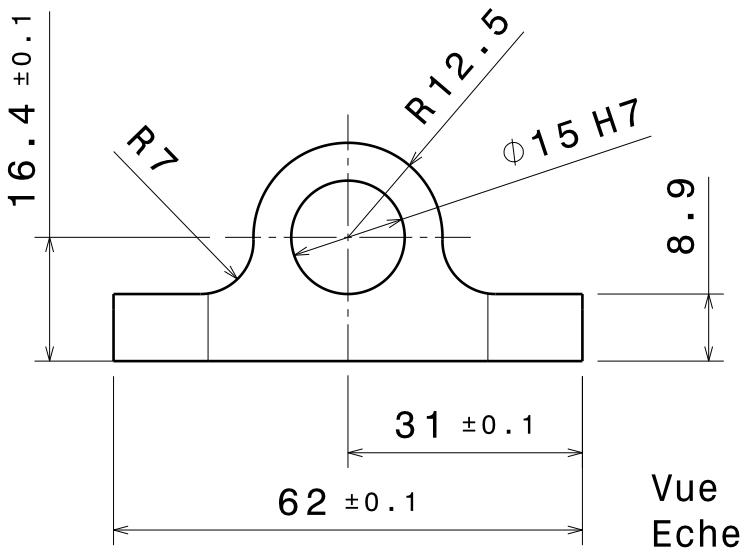

Vue de face
Echelle : 1:1

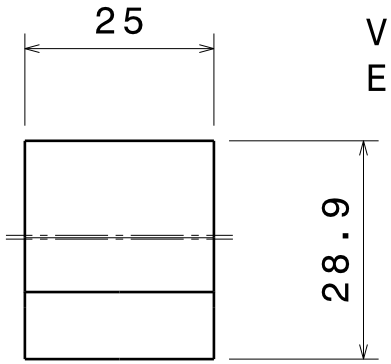

Vue de gauche
Echelle : 1:1

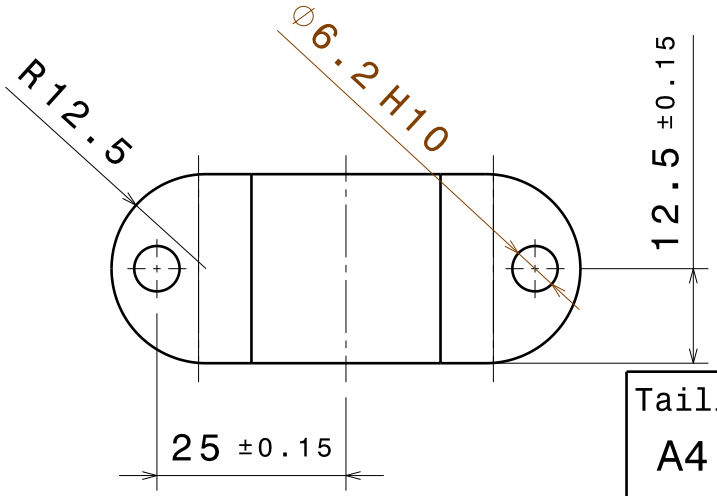

Vue de dessus
Echelle : 1:1

Dimensions du brut :
62*29.9*25

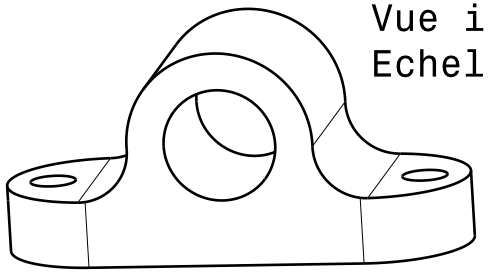

Vue isométrique
Echelle : 1:1

Tolérances géométriques ISO 2768 - mK

Taille A4		Ecurie Piston Sport Auto
Dessiné par Martin Z	Date 12/12/2014	Désignation: Chape BAR avant
Coordonnées 06 45 59 91 01 romain.carre@ecl13.ec-lyon.fr		Quantité 2 / Matériau Aluminium au choix / Version 1.0
Plan vérifié par RCE 465		Echelle 1:1 / Numéro du plan 15-B-011 / Feuille 1/1

University	Ecole Centrale de Lyon			**Car #**	81	**Part Cost**	$ 1,32
System	Suspension	**FileLink1**				**Qty**	4
Assembly	Front Anti Roll System	**FileLink2**		**FileLink1**			
Part	Bushing	**FileLink3**		**FileLink2**		**Extended Cost**	$ 5,30
P/N Base	SU 10005			**FileLink3**			
Suffix	AA						
Details	Bushing						

ItemOrder	Material	Use	UnitCost	Size1	Unit1	Size2	Unit2	Area Name	Area	Length	Density	Quantity	Sub Total
10	Bronze (per kg)	Stock material for bushings	$ 2,20	5	mm			Round area, r	0	0,01	6 400,00	1	$ 0,01
												Sub Total	**$ 0,01**

ItemOrder	Process	Use	UnitCost	Unit	Quantity	Multiplier	Mult. Val.	Sub Total
10	Machining Setup, Install and remove	Setup machining (turning) and	$ 1,30	unit	1			$ 1,30
20	Machining	Machining of the bushing (tur	$ 0,04	cm^3	0	Material Bronze	1,33	$ 0,01
							Sub Total	**$ 1,31**

University	Ecole Centrale de Lyon			**Car #**	81	**Part Cost**	13,02
System	Suspension	**FileLink1**				**Qty**	1,00
Assembly	Front Anti Roll System	**FileLink2**		**FileLink1**			
Part	Push-rod tube	**FileLink3**		**FileLink2**		**Extended Cos**	$ 13,02
P/N Base	SU 10006			**FileLink3**			
Suffix	AA						
Details	Carbon composite tube made by fillament wirring						

ItemOrder	Material	Use	UnitCost	Size1	Unit1	Size2	Unit2	Area Name	Area	Length	Density	Quantity	Sub Total
10	Carbon Fiber, 1 Ply	Stock	$ 200,00	7	mm	5	mm	Tube	7,54E-05	0,356	2 000,00	1	$ 10,74
20	Aramid (Kevlar) Fiber, 1 Ply	Stock	$ 150,00	8	mm	30	% Area	Tube	5,37E-03	0,001	2 000,00	1	$ 0,81
												Sub Total	**$ 11,54**

ItemOrder	Process	Use	UnitCost	Unit	Quantity	Multiplier	Mult. Val.	Sub Total
10	Lamination, Fillament Wirring	Tube Lamination	$ 25,00	kg	0,05905189			$ 1,48
							Sub Total	**$ 1,48**

University	Ecole Centrale de Lyon			**Car #**	81	**Part Cost**	2,75
System	Suspension	**FileLink1**				**Qty**	2
Assembly	Front Anti Roll System	**FileLink2**		**FileLink1**			
Part	Push rod insert	**FileLink3**		**FileLink2**		**Extended Cos**	$ 5,51
P/N Base	SU 10007			**FileLink3**			
Suffix	AA						
Details							

ItemOrder	Material	Use	UnitCost	Size1	Unit1	Size2	Unit2	Area Name	Area	Length	Density	Quantity	Sub Total
10	Steel, Mild (per kg)	Steel for machining the part	$ 2,25	8,5	mm			Radius	2,27E-04	20,000	7 860,00	1	$ 0,80
												Sub Total	**$ 0,80**

ItemOrder	Process	Use	UnitCost	Unit	Quantity	Multiplier	Mult. Val.	Sub Total
10	Machining Setup, Install and remove	Setup for machining and removal	$ 1,30	unit	1			$ 1,30
20	Machining	Material removal - side view profile	$ 0,04	cm^3	2,5	Material - Steel	3	$ 0,30
30	Tapping Holes	Rod End emplacement	$ 0,35		1			$ 0,35
							Sub Total	**$ 1,95**

Vue de face
Echelle : 5:1

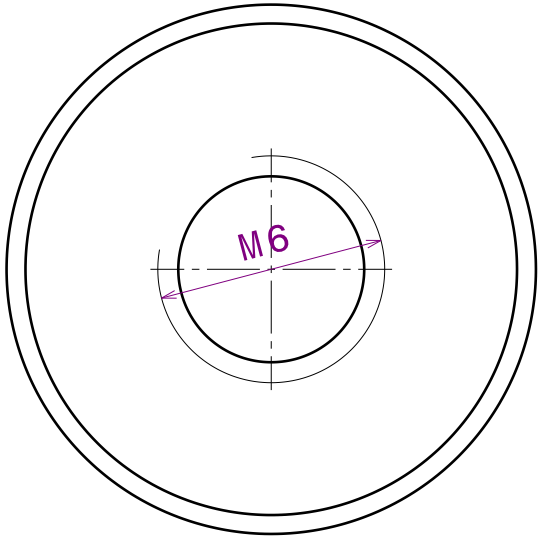

Vue de gauche
Echelle : 5:1

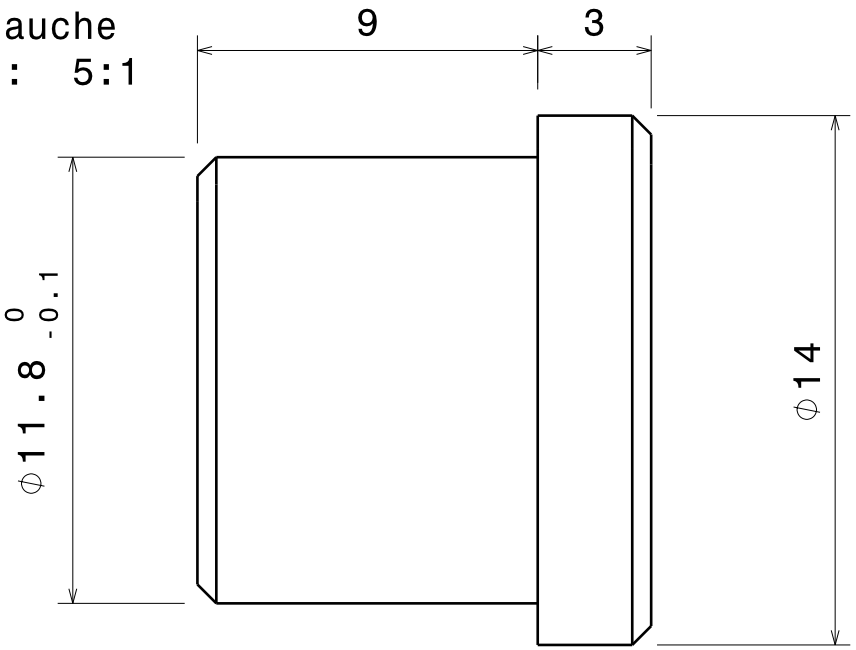

Tolérances générales ISO 2768 - mK

Chanfreins de 0.5mm

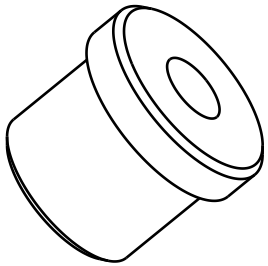

Vue isométrique
Echelle : 2:1

Taille A4		Ecurie Piston Sport Auto
Dessiné par Simon CHARAUDEAU	Date 22/12/2014	Désignation Insert taraudé M6
Coordonnées 06 25 18 15 19 simon.charaudeau@ecl13.ec-lyon.fr		Quantité 8 / Matériau Acier S235 / Version 1.0
Plan vérifié par PMR 469		Echelle 1:1 / Numéro du plan 15-B-026 / Feuille 1/1

University	Ecole Cenrale de Lyon	**Car #**	81	**Asm Cost**	58,70
System	Suspension			**Qty**	1
Assembly	Rear Anti Roll System	**FileLink1**			
P/N Base	SU A0011	**FileLink2**		**Extended Cost**	$ 58,70
Suffix	AA	**FileLink3**			
Details	Rear Anti Roll System				

ItemOrder	Part	Part Cost	Quantity	Sub Total
10	Rear Sway Bar	$ 7,52	1	$ 7,52
20	Rear Lever	$ 1,99	2	$ 3,97
30	Rear Roll Bar mount inf	$ 1,99	2	$ 3,99
40	Rear Roll Bar mount sup	$ 5,65	2	$ 11,31
50	Bushing	$ 1,32	4	$ 5,30
60	Push-rod tube	$ 2,74	2	$ 5,49
70	Push rod insert	$ 2,75	4	$ 11,01
			Sub Total	**$ 48,58**

ItemOrder	Material	Use	UnitCost	Size1	Unit1	Size2	Unit2	Area Name	Area	Length	Density	Quantity	Sub Total
10	Paint	Front Roll bar mount sup red paint	$ 10,00	0,003	m^2							1,00	$ 0,03
												Sub Total	**$ 0,03**

ItemOrder	Process	Use	UnitCost	Unit	Quantity	Multiplier	Mult. Val.	Sub Total
10	Weld	Welding the roll bar mounts on the frame	$ 0,15	cm	6			$ 0,90
20	Aerosol apply	Painting of suspension mount in red	$ 5,25	m^2	0,003			$ 0,02
30	Assemble, 1 kg, Interference	Insert 2 bronze bushings into the rocker	$ 0,19	unit	4			$ 0,76
40	Assemble, 1 kg, Loose	assemble sway bar and the 2 mounts sup	$ 0,06	unit	2			$ 0,12
50	Weld	Welding the 4 lever on the roll bar	$ 0,15	cm	4			$ 0,60
60	Ratchet <= 25.4 mm	Bolt mount sup on mount inf	$ 0,75	unit	2			$ 1,50
70	Reaction Tool <= 25.4 mm	Thigten the M6 nuts	$ 0,25	unit	2			$ 0,50
80	Brush Apply	Gluing the insert on the tube	$ 0,02	cm²	5,6	Repeat 2	2	$ 0,22
90	Ratchet	Put the nuts on the bolts	$ 0,50	unit	2			$ 1,00
100	Wrench	Put the nuts on the rod end	$ 1,00	unit	2			$ 2,00
							Sub Total	**$ 7,62**

ItemOrder	Fastener	Use	UnitCost	Size1	Unit1	Size2	Unit2	Quantity	Sub Total
10	Bolt,Grade 12.9 (SAE)		$ 0,33	6	mm	35	mm	1	$ 0,33
20	Washer, Grade 12.9 (SAE 5)		$ 0,07	6	mm			2	$ 0,14
								Sub Total	**$ 0,47**

ItemOrder	Tooling	Use	UnitCost	Unit	Quantity	PVF	FractionIncluded	Sub Total
10	Welds - Welding Fixture	Welding of the mounts the frame	$ 500,00	point	4	3000	1	$ 0,67
20	Welds - Welding Fixture	Welding of the lever on the sway bar	$ 500,00	point	8	3000	1	$ 1,33
							Sub Total	**$ 2,00**

University	Ecole Centrale de Lyon		**Car #**	81	**Part Cost**	$ 7,52
System	Suspension	**FileLink1**			**Qty**	2
Assembly	Rear Anti Roll System	**FileLink2**	**FileLink1**			
Part	Rear Sway Bar	**FileLink3**	**FileLink2**		**Extended Cost**	$ 15,04
P/N Base	SU 11001		**FileLink3**			
Suffix	AA					
Details	Rear Sway Bar					

ItemOrder	Material	Use	UnitCost	Size1	Unit1	Size2	Unit2	Area Name	Area	Length	Density	Quantity	Sub Total
10	Steel, Mild	Stock material for cylinder	$ 2,25	12	mm	9	mm	Round tube 12*1,5mm	1,98E-04	0,700	7860	1	$ 2,45
												Sub Total	**$ 2,45**

ItemOrder	Process	Use	UnitCost	Unit	Quantity	Multiplier	Mult. Val.	Sub Total
10	Machining Setup, Install and remove	cutting	$ 1,30	unit	1			$ 1,30
20	Laser Cut	Cutout shape	$ 0,01	cm	151	Material - Cast Iron	2,5	$ 3,77
							Sub Total	**$ 5,07**

University	Ecole Centrale de Lyon			**Car #**	81	**Part Cost**	$ 1,99
System	Suspension	**FileLink1**				**Qty**	12
Assembly	Rear Anti Roll System	**FileLink2**		**FileLink1**			
Part	Rear Lever	**FileLink3**		**FileLink2**		**Extended Cost**	$ 23,85
P/N Base	SU 11002			**FileLink3**			
Suffix	AA						
Details	Rear Lever						

ItemOrder	Material	Use	UnitCost	Size1	Unit1	Size2	Unit2	Area Name	Area	Length	Density	Quantity	Sub Total
10	Steel, Mild (per kg)	Stock material for part	$ 2,25	85	mm	26	mm	Rectangle are	2,21E-03	0,003	7860	1	$ 0,12
												Sub Total	**$ 0,12**

ItemOrder	Process	Use	UnitCost	Unit	Quantity	Multiplier	Mult. Val.	Sub Total
10	Machining Setup, Install and remove	Setup for laser cutting	$ 1,30	unit	1			$ 1,30
20	Laser Cut		$ 0,01	cm	19	Material - Steel	3	$ 0,57
							Sub Total	**$ 1,87**

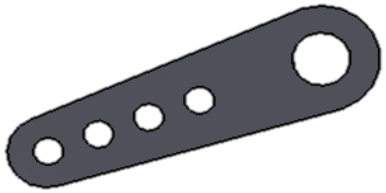

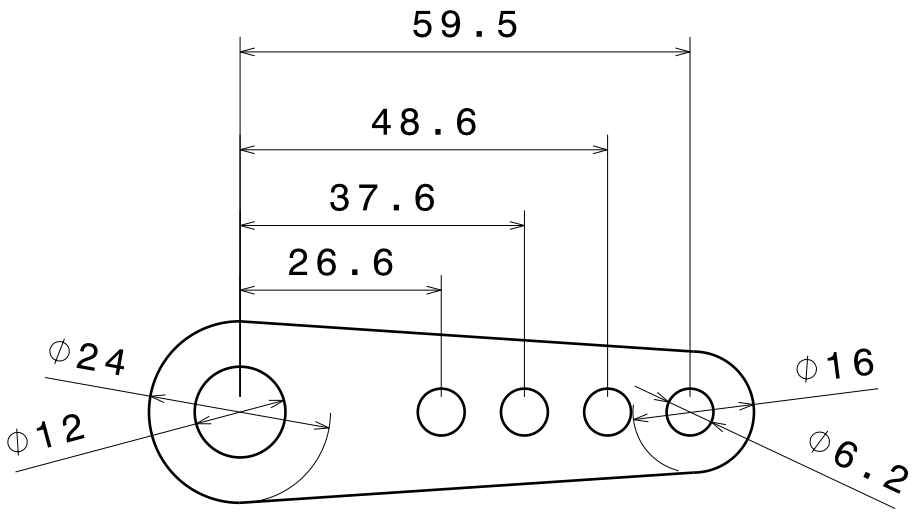

Vue de face
Echelle : 1:1

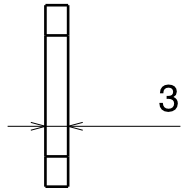

Vue de gauche
Echelle : 1:1

Tolérances générales ISO 2768 - mK

Taille A4		Ecurie Piston Sport Auto
Dessiné par Romain Carré	Date 16/12/2014	Désignation Levier AR
Coordonnées Tel : 06 45 59 91 01 romain.carre@ecl13.ec-lyon.fr		Quantité 4 / Matériau Acier s550 / Version 1
Plan vérifié par CCN 473		Echelle 1:1 / Numéro du plan 15-M-076 / Feuille 1/1

University	Ecole Centrale de Lyon			**Car #**	81	**Part Cost**	$ 1,99
System	Suspension	**FileLink1**				**Qty**	2
Assembly	Rear Anti Roll System	**FileLink2**		**FileLink1**			
Part	Rear Roll Bar mount inf	**FileLink3**		**FileLink2**		**Extended Cost**	$ 3,99
P/N Base	SU 11003			**FileLink3**			
Suffix	AA						
Details	Rear Roll Bar mount inf						

ItemOrder	Material	Use	UnitCost	Size1	Unit1	Size2	Unit2	Area Name	Area	Length	Density	Quantity	Sub Total
10	Steel, Mild (per kg)	Stock material for part	$ 2,25	60	mm	30		Rectangle are	1,80E-03	0,002	7860	1	$ 0,06
												Sub Total	**$ 0,06**

ItemOrder	Process	Use	UnitCost	Unit	Quantity	Multiplier	Mult. Val.	Sub Total
10	Machining Setup, Install and remove	Setup for laser cutting	$ 1,30	unit	1			$ 1,30
20	Laser Cut		$ 0,01	cm	21	Material - Steel	3	$ 0,63
							Sub Total	**$ 1,93**

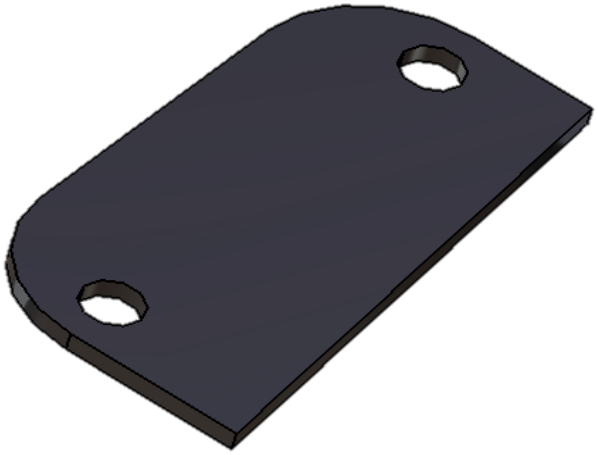

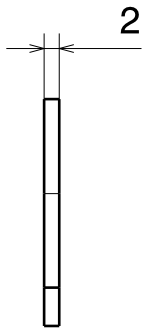

Vue de droite
Echelle : 1:1

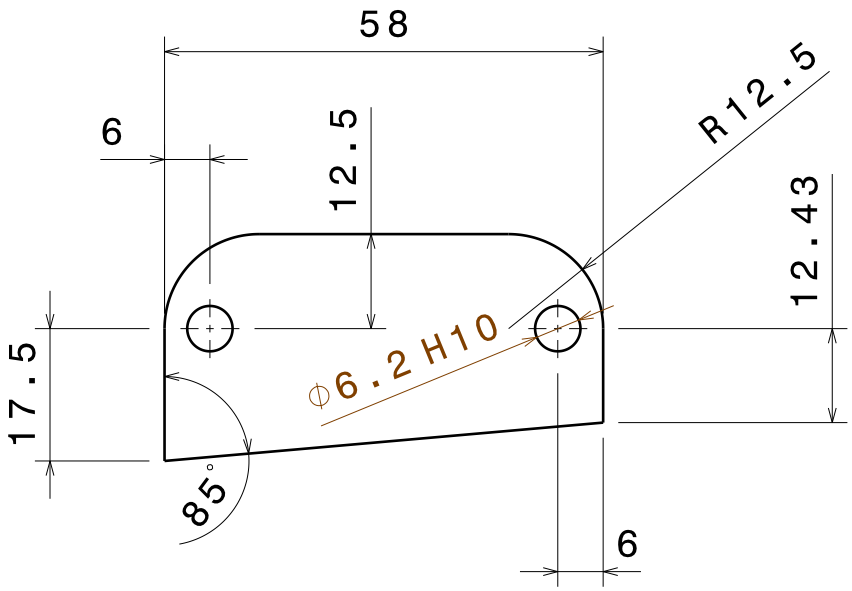

Vue de face
Echelle : 1:1

Tolérances générales ISO 2768 - mK

Taille A4		Ecurie Piston Sport Auto
Dessiné par Martin Z	Date 12/12/2014	Désignation: Chape fixation BAR arriere
Coordonnées 06 45 59 91 01 romain.carre@ecl13.ec-lyon.fr		Quantité 2 / Matériau Acier S 235 / Version 1.0
Plan vérifié par RCE 475		Echelle 1:1 / Numéro du plan 15-M-073 / Feuille 1/1

University	Ecole Centrale de Lyon			**Car #**	81	**Part Cost**	$ 5,65
System	Suspension	**FileLink1**				**Qty**	2
Assembly	Rear Anti Roll System	**FileLink2**		**FileLink1**			
Part	Rear Roll Bar mount sup	**FileLink3**		**FileLink2**		**Extended Cost**	$ 11,31
P/N Base	SU 11004			**FileLink3**			
Suffix	AA						
Details	Rear Roll Bar mount sup						

ItemOrder	Material	Use	UnitCost	Size1	Unit1	Size2	Unit2	Area Name	Area	Length	Density	Quantity	Sub Total
10	Aluminum, Normal	Mounts material	$ 4,20	60	mm	25	mm	Rectangular area 60mm x	0,00260	0,042	2 710,00	1	$ 1,24
												Sub Total	**$ 1,24**

ItemOrder	Process	Use	UnitCost	Unit	Quantity	Multiplier	Mult. Val.	Sub Total
10	Machining Setup, Install and remove	Setup for machining	$ 1,30	unit	1			$ 1,30
20	Machining	Material removal	$ 0,04	cm^3	43	Material -Alu	1	$ 1,72
30	Drilled holes <25,4mm dia.	Central hole	$ 0,35	hole	2			$ 0,70
40	Machining setup change		$ 0,65	unit	1			$ 0,65
50	Drilled holes <25,4mm dia.	Holes for assembly	$ 0,04	cm^3	1	Material -Alu	1	$ 0,04
							Sub Total	**$ 4,41**

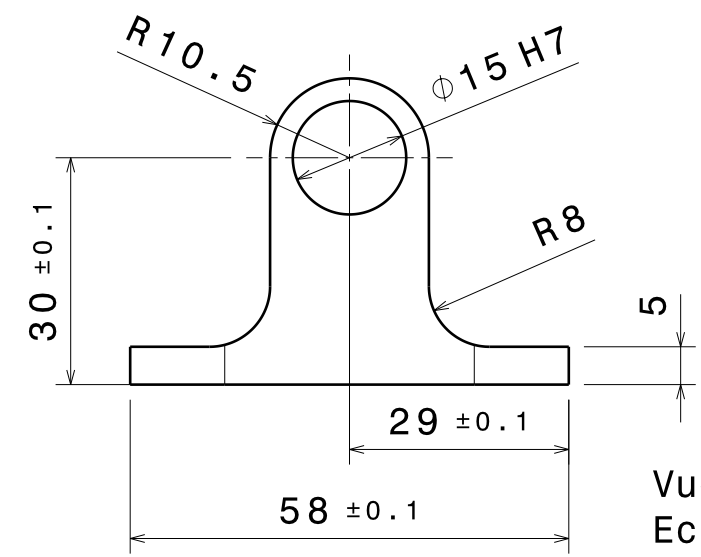

Vue de face
Echelle : 1:1

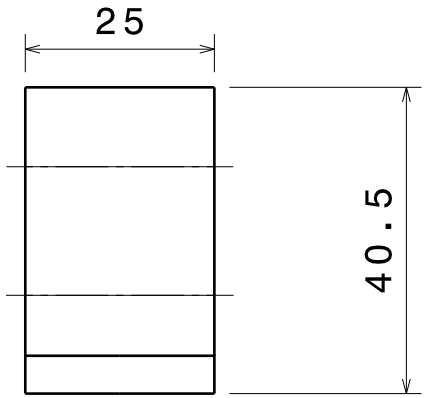

Vue de gauche
Echelle : 1:1

Vue isométrique
Echelle : 1:1

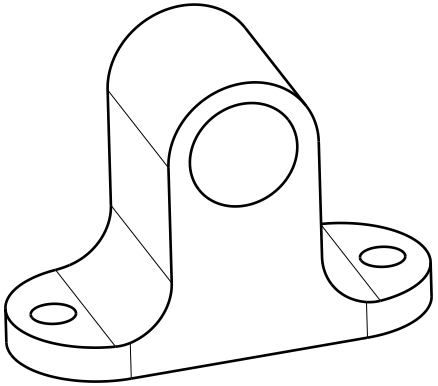

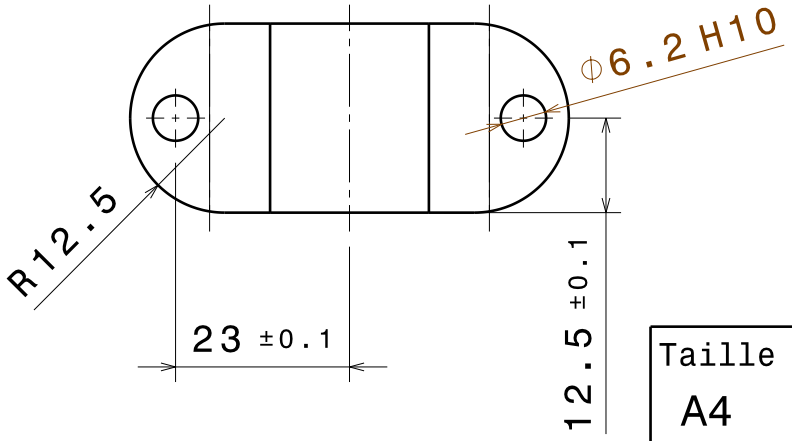

Vue de dessus
Echelle : 1:1

Dimensions du brut :
58*40.5*25

Tolérances générales ISO 2768 - mK

Taille A4		Ecurie Piston Sport Auto
Dessiné par Martin Z	Date 12/12/2014	Désignation: Chape BAR arrière
Coordonnées 06 45 59 91 01 romain.carre@ecl13.ec-lyon.fr		Quantité 2 / Matériau Aluminium au choix / Version 1.0
Plan vérifié par RCE 477		Echelle 1:1 / Numéro du plan 15-B-012 / Feuille 1/1

University	Ecole Centrale de Lyon			**Car #**	81	**Part Cost**	$ 1,32
System	Suspension	**FileLink1**				**Qty**	2
Assembly	Rear Anti Roll System	**FileLink2**		**FileLink1**			
Part	Bushing	**FileLink3**		**FileLink2**		**Extended Cost**	$ 2,65
P/N Base	SU 11004			**FileLink3**			
Suffix	AA						
Details	Bushing						

ItemOrder	Material	Use	UnitCost	Size1	Unit1	Size2	Unit2	Area Name	Area	Length	Density	Quantity	Sub Total
10	Bronze (per kg)	Stock material for bushings	$ 2,20	5	mm			Round area, r	0	0,01	6 400,00	1	$ 0,01
												Sub Total	**$ 0,01**

ItemOrder	Process	Use	UnitCost	Unit	Quantity	Multiplier	Mult. Val.	Sub Total
10	Machining Setup, Install and remove	Setup machining (turning) and removal	$ 1,30	unit	1			$ 1,30
20	Machining	Machining of the bushing (turning)	$ 0,04	cm^3	0	Material Bronze	1,33	$ 0,01
							Sub Total	**$ 1,31**

University	Ecole Centrale de Lyon			**Car #**	81	**Part Cost**	2,74
System	Suspension	**FileLink1**				**Qty**	1,00
Assembly	Rear Anti Roll System	**FileLink2**		**FileLink1**			
Part	Push-rod tube	**FileLink3**		**FileLink2**		**Extended Cos**	$ 2,74
P/N Base	SU 11006			**FileLink3**			
Suffix	AA						
Details	Carbon composite tube made by fillament wirring						

ItemOrder	Material	Use	UnitCost	Size1	Unit1	Size2	Unit2	Area Name	Area	Length	Density	Quantity	Sub Total
10	Carbon Fiber, 1 Ply	Stock	$ 200,00	7	mm	5	mm	Tube	7,54E-05	0,075	2 000,00	1	$ 2,26
20	Aramid (Kevlar) Fiber, 1 Ply	Stock	$ 150,00	8	mm	30	% Area	Tube	1,13E-03	0,001	2 000,00	1	$ 0,17
												Sub Total	**$ 2,43**

ItemOrder	Process	Use	UnitCost	Unit	Quantity	Multiplier	Mult. Val.	Sub Total
10	Lamination, Fillament Wirring	Tube Lamination	$ 25,00	kg	0,01244071			$ 0,31
							Sub Total	**$ 0,31**

University	Ecole Centrale de Lyon			**Car #**	81	**Part Cost**	2,75
System	Suspension	**FileLink1**				**Qty**	2
Assembly	Rear Anti Roll System	**FileLink2**		**FileLink1**			
Part	Push rod insert	**FileLink3**		**FileLink2**		**Extended Cos**	$ 5,51
P/N Base	SU 11007			**FileLink3**			
Suffix	AA						
Details							

ItemOrder	Material	Use	UnitCost	Size1	Unit1	Size2	Unit2	Area Name	Area	Length	Density	Quantity	Sub Total
10	Steel, Mild (per kg)	Steel for machining the part	$ 2,25	8,5	mm			Radius	2,27E-04	20,000	7 860,00	1	$ 0,80
												Sub Total	**$ 0,80**

ItemOrder	Process	Use	UnitCost	Unit	Quantity	Multiplier	Mult. Val.	Sub Total
10	Machining Setup, Install and remove	Setup for machining and removal	$ 1,30	unit	1			$ 1,30
20	Machining	Material removal - side view profile	$ 0,04	cm^3	2,5	Material - Steel	3	$ 0,30
30	Tapping Holes	Rod End emplacement	$ 0,35		1			$ 0,35
							Sub Total	**$ 1,95**

Vue de face
Echelle : 5:1

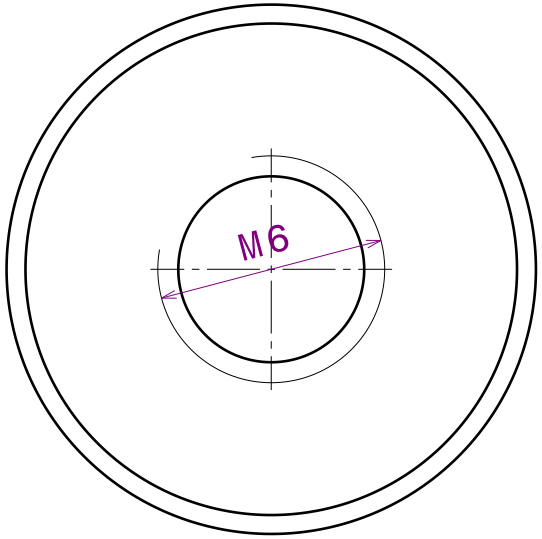

Vue de gauche
Echelle : 5:1

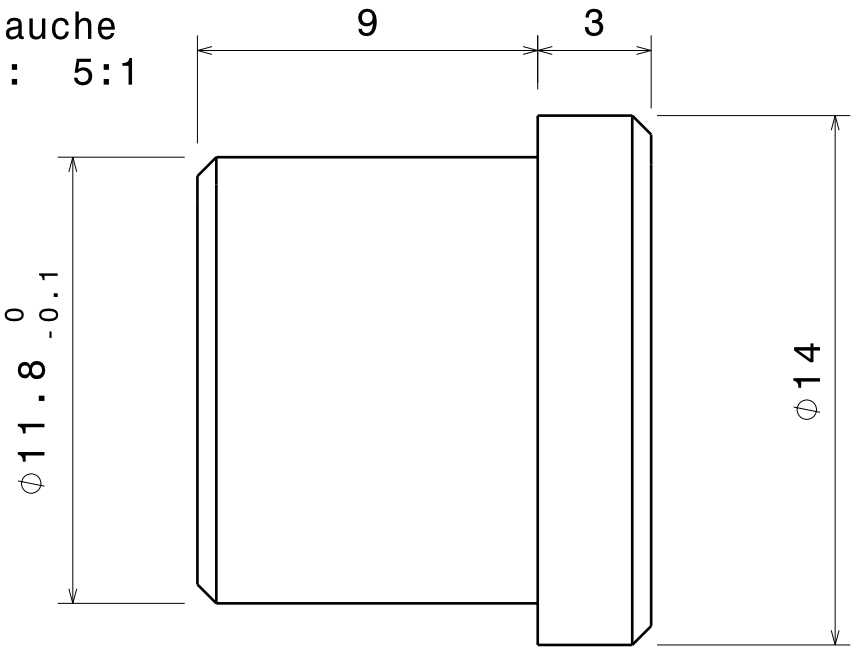

Tolérances générales ISO 2768 - mK

Chanfreins de 0.5mm

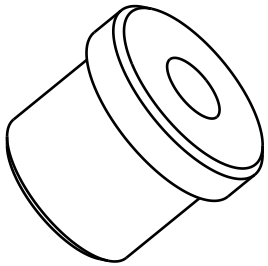

Vue isométrique
Echelle : 2:1

Taille A4		Ecurie Piston Sport Auto
Dessiné par Simon CHARAUDEAU	Date 22/12/2014	Désignation Insert taraudé M6
Coordonnées 06 25 18 15 19 simon.charaudeau@ecl13.ec-lyon.fr		Quantité 8 / Matériau Acier S235 / Version 1.0
Plan vérifié par PMR 481		Echelle 1:1 / Numéro du plan 15-B-026 / Feuille 1/1

University	Ecole Centrale de Lyon	**Car #**	81	**Asm Cost**	$ 74,51
System	Suspension			**Qty**	2
Assembly	Front Uprights Assembly	**FileLink1**			
P/N Base	SU A0012	**FileLink2**		**Extended Cost**	$ 149,01
Suffix	AA	**FileLink3**			
Details					

ItemOrder	Part	Part Cost	Quantity	Sub Total
10	Front Uprights	$ 48,84	1	$ 48,84
20	Steering Tab	$ 4,86	1	$ 4,86
30	Upper Tab	$ 3,24	1	$ 3,24
40	Camber adjustment shims	$ 1,70	2	$ 3,40
50	Lower Spacer	$ 1,33	2	$ 2,67
60	Upper Spacer	$ 1,37	2	$ 2,74
			Sub Total	**$ 65,75**

ItemOrder	Process	Use	UnitCost	Unit	Quantity	Multiplier	Mult. Val.	Sub Total
10	Assemble, 3 kg, Interference	Assemble with front hub	$ 0,56	Unit	1		1	$ 0,56
20	Assemble, 1 kg, Line-on-Line	Steering tab assemble	$ 0,13	Unit	1		1	$ 0,13
30	Ratchet <= 25.4 mm	Bolt steering tab and upright	$ 0,75	Unit	2		1	$ 1,50
40	Reaction Tool <= 25.4 mm	Bolt steering tab and upright	$ 0,25	Unit	2		1	$ 0,50
50	Assemble, 1 kg, Line-on-Line	Camber adjustment shims assemble	$ 0,13	Unit	1		1	$ 0,13
60	Assemble, 1 kg, Line-on-Line	Upper Tab assemble	$ 0,13	Unit	1		1	$ 0,13
70	Ratchet <= 25.4 mm	Bolt upper tab and upright	$ 0,75	Unit	2		1	$ 1,50
80	Reaction Tool <= 25.4 mm	Bolt upper tab and upright	$ 0,25	Unit	2		1	$ 0,50
90	Assemble, 1 kg, Loose	Upper and Lower spacers assemble	$ 0,06	Unit	4		1	$ 0,24
100	Assemble, 5 kg, Line-on-Line	Assembe with the frame	$ 0,63	Unit	1		1	$ 0,63
110	Ratchet <= 25.4 mm	Bolt upright with Front A arms	$ 0,75	Unit	2		1	$ 1,50
120	Reaction Tool <= 25.4 mm	Bolt upright with Front A arms	$ 0,25	Unit	2		1	$ 0,50
							Sub Total	**7,82**

ItemOrder	Fastener	Use	UnitCost	Size1	Unit1	Size2	Unit2	Quantity	Sub Total
10	Bolt, Grade 8.8 (SAE 5)	Upper tab fixing bolts	$ 0,12	6	mm	50	mm	2	$ 0,24
20	Bolt, Grade 8.8 (SAE 5)	Steering tab fixing bolts	$ 0,07	6	mm	30	mm	2	$ 0,14
30	Bolt, Grade 8.8 (SAE 5)	Upright and A arms fixing bolts	$ 0,14	8	mm	35	mm	2	$ 0,28
40	Nut, Grade 8.8 (SAE 5)	Upper tab and steering tab nuts	$ 0,03	6	mm			4	$ 0,12
50	Nut, Grade 8.8 (SAE 5)	Upright and A arms nuts	$ 0,04	8	mm			2	$ 0,08
60	Washer, Grade 8.8 (SAE 5)	Upper tab and steering tab washer	$ 0,01	6	mm			4	$ 0,04
70	Washer, Grade 8.8 (SAE 5)	Upright and A arms washers	$ 0,01	8	mm			4	$ 0,04
								Sub Total	**$ 0,94**

University	Ecole Centrale de Lyon			**Car #**	81	**Part Cost**	$ 48,84
System	Suspension	**FileLink1**				**Qty**	1
Assembly	Front Uprights Assembly	**FileLink2**		**FileLink1**			
Part	Front Uprights	**FileLink3**		**FileLink2**		**Extended Cost**	$ 48,84
P/N Base	SU 12001			**FileLink3**			
Suffix	AA						
Details							

ItemOrder	Material	Use	UnitCost	Size1	Unit1	Size2	Unit2	Area Name	Area	Length	Density	Quantity	Sub Total
10	Aluminum, Premium (per kg)	Front Uprights	$ 4,20	2,81	kg			Rectangular area 206 x 112 mm	2,31E-02	0,05	2 710,00	1	$ 11,82
												Sub Total	**$ 11,82**

ItemOrder	Process	Use	UnitCost	Unit	Quantity	Multiplier	Mult. Val.	Sub Total
10	Machining Setup, Install and remove		$ 1,30	Unit	1			$ 1,30
20	Laser Cut	Material removal - outer profile and slot	$ 0,04	cm^3	788	Material - Aluminum	1	$ 31,52
30	Machining Setup, Change		$ 0,65		1			$ 0,65
40	Machining	Stock removal	$ 0,04	cm^3	88,8	Material - Aluminum	1	$ 3,55
							Sub Total	**$ 37,02**

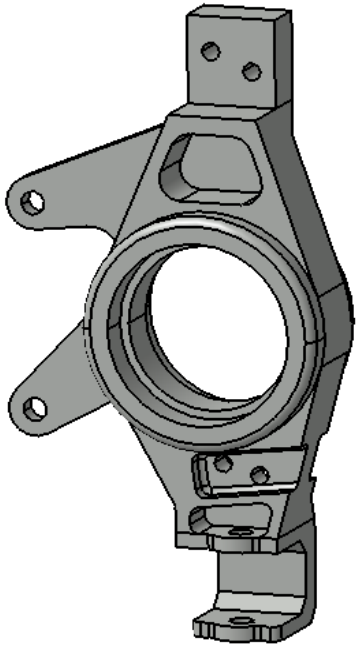

Vue de dessous

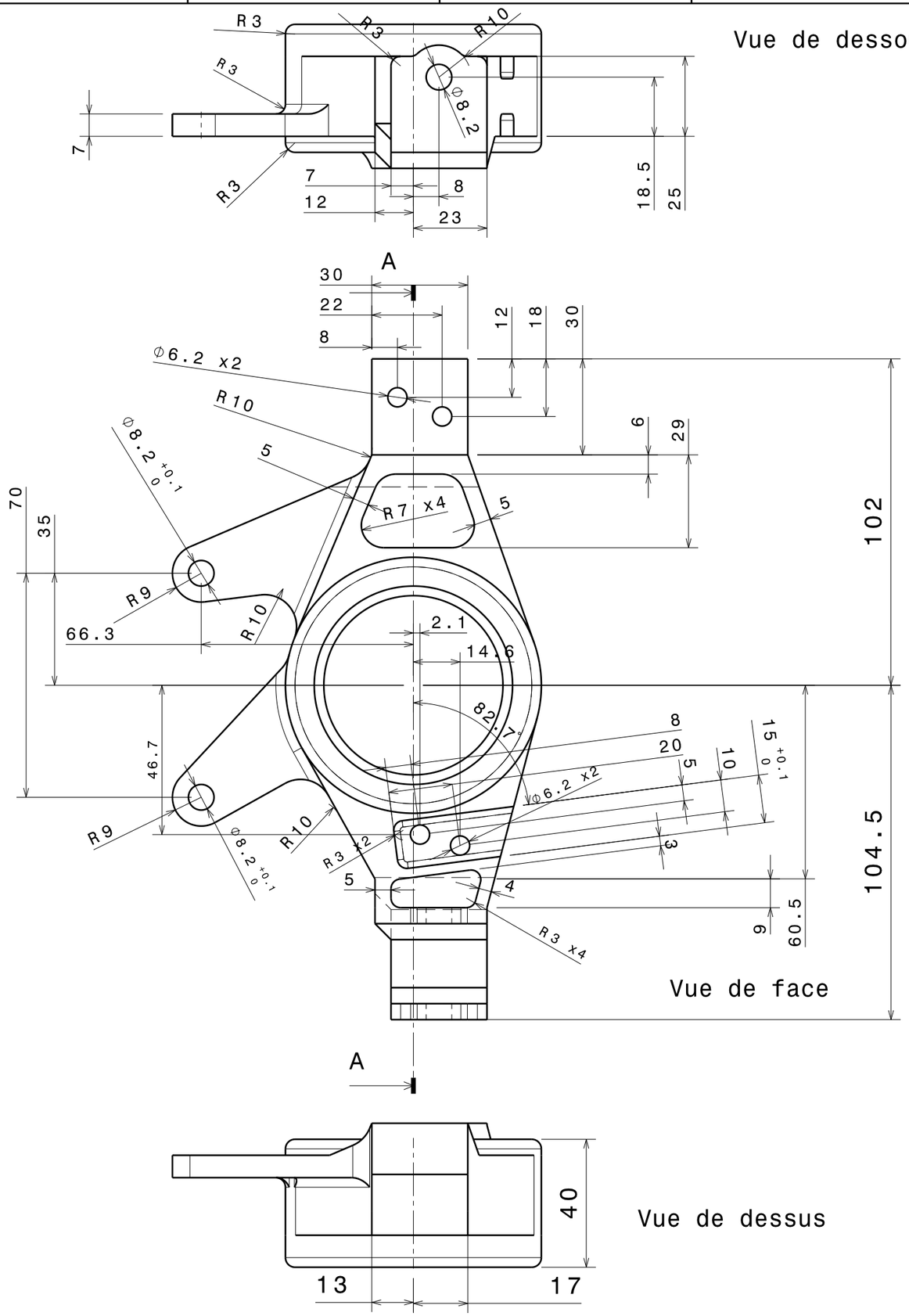

Vue de face

Vue de dessus

Taille Brut :
112.24x206.5x45
Tolérances Générales :
ISO 2768 mK
Tous les chanfreins sont à 45°

Pas de symetrie
sur les trous

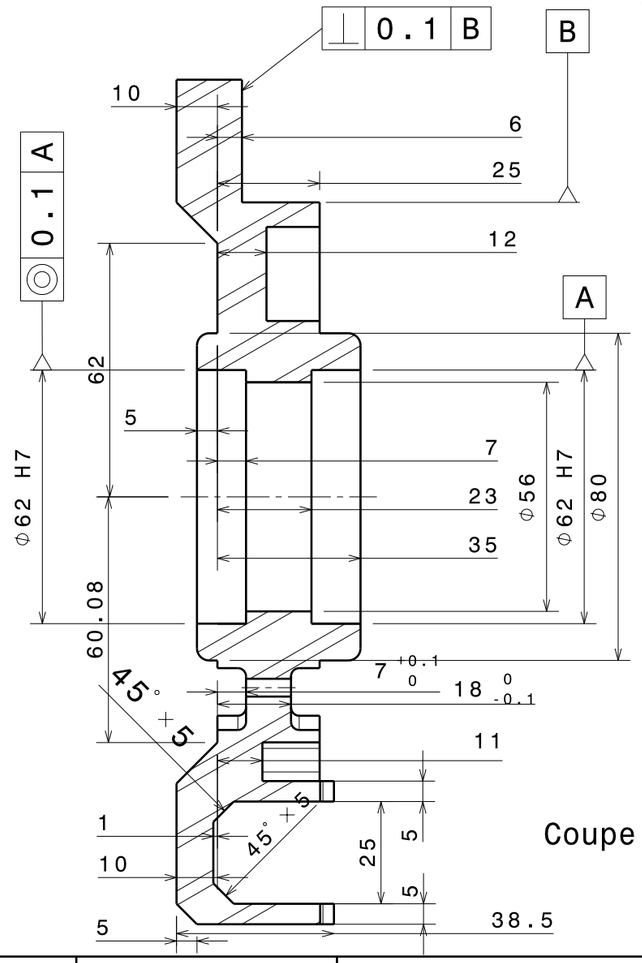

Coupe A-A

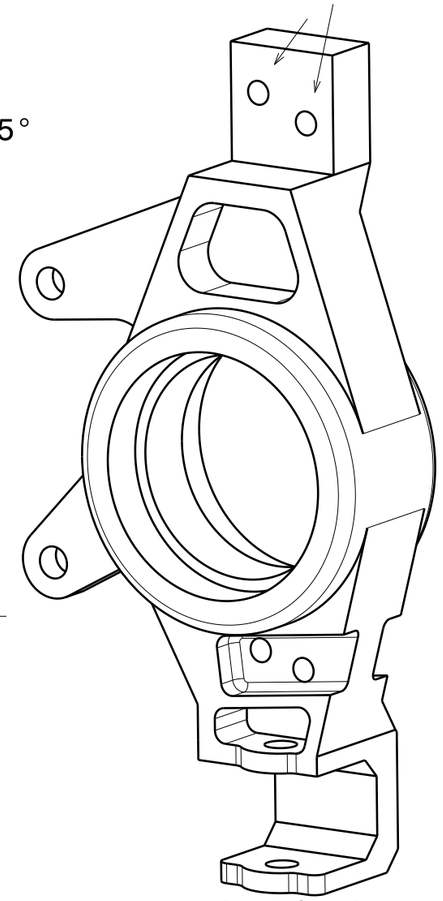

Vue isométrique

Taille A3		Ecurie Piston Sport Auto	
Dessiné par Damien Turlay	Date 13/01/2015	Désignation Porte Moyeu AvG	
Coordonnées damien.turlay@ecl13.ec-lyon.fr 06 01 95 85 51		Quantité 1+1	Matériau Aluminium 7075	Version 1
Plan vérifié par TDN, LBD et SCU		Echelle 2:3	Numéro du plan 15-B-048	Feuille 1/1

University	Ecole Centrale de Lyon			**Car #**	81	**Part Cost**	$ 4,86
System	Suspension	**FileLink1**				**Qty**	1
Assembly	Front Uprights Assembly	**FileLink2**		**FileLink1**			
Part	Steering tab	**FileLink3**		**FileLink2**		**Extended Cost**	$ 4,86
P/N Base	SU 12002			**FileLink3**			
Suffix	AA						
Details							

ItemOrder	Material	Use	UnitCost	Size1	Unit1	Size2	Unit2	Area Name	Area	Length	Density	Quantity	Sub Total
10	Aluminum, Normal (per kg)	Steering tab	$ 4,20	0,23	kg			Rectangular area 86 x 40 mm	3,44E-03	0,03	2 710,00	1	$ 0,98
												Sub Total	**$ 0,98**

ItemOrder	Process	Use	UnitCost	Unit	Quantity	Multiplier	Mult. Val.	Sub Total
10	Machining Setup, Install and remove		$ 1,30	Unit	1			$ 1,30
20	Machining	Material removal - outer profile and slot	$ 0,04	cm^3	15	Material - Aluminum	1	$ 0,60
30	Machining Setup, Change		$ 0,65	Unit	1			$ 0,65
40	Machining	Material removal - lateral side	$ 0,04	cm^3	12	Material - Aluminum	1	$ 0,48
50	Machining Setup, Change		$ 0,65	Unit	1			$ 0,65
60	Machining	Stock removal	$ 0,04	cm^3	5	Material - Aluminum	1	$ 0,20
							Sub Total	**$ 3,88**

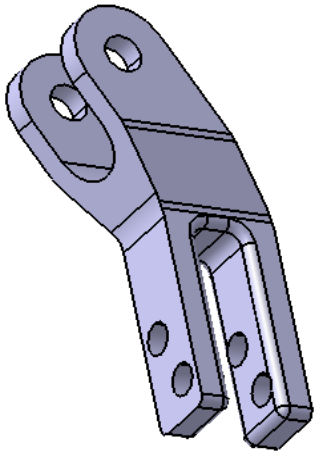

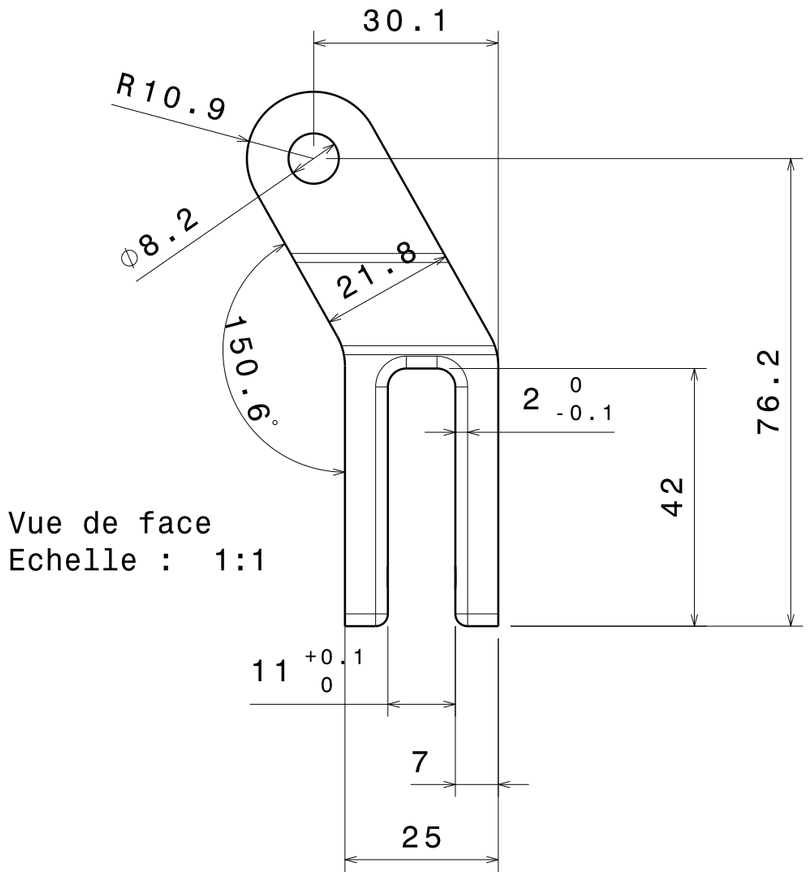

Vue de face
Echelle : 1:1

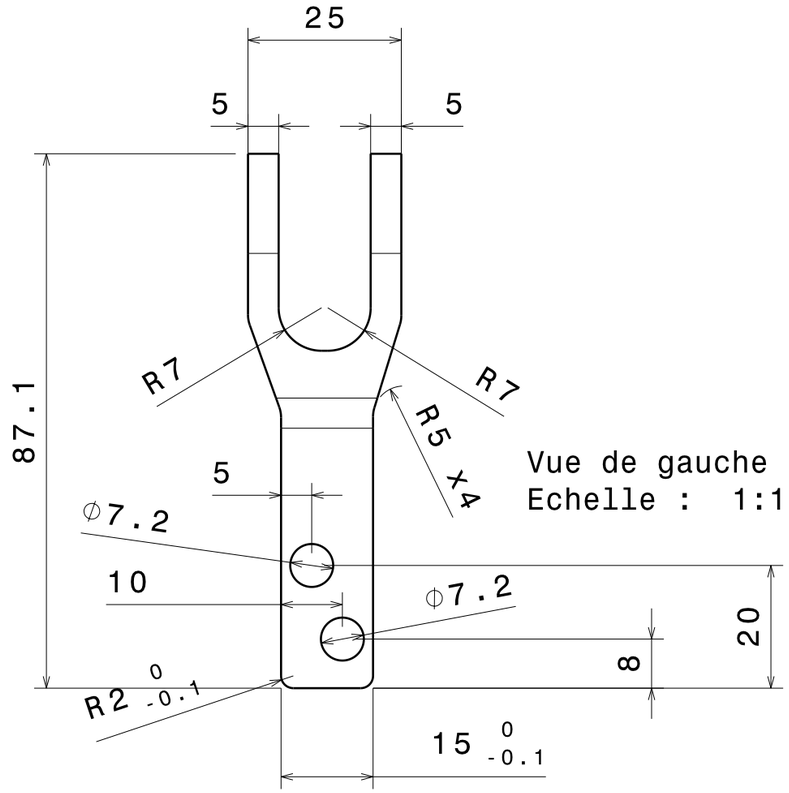

Vue de gauche
Echelle : 1:1

Taille Brut :
81.28x46.1x25
Tolérences Générales :
ISO 2768 mK

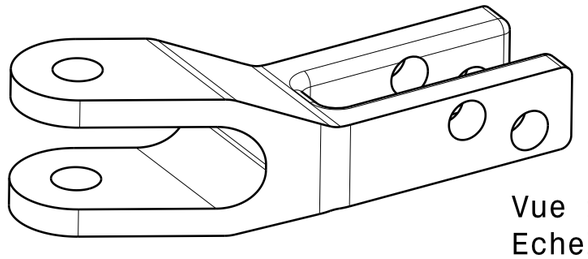

Vue isométrique
Echelle : 1:1

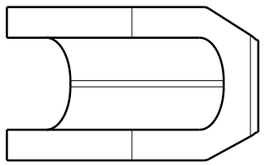

Vue de dessus
Echelle : 1:1

Taille A3		Ecurie Piston Sport Auto
Dessiné par Damien Turlay	Date 13/01/2015	Désignation Chape Biellette Direction
Coordonnées damien.turlay@ecl13.ec-lyon.fr 06 01 95 85 51		Quantité 1+1 / Matériau Aluminium 7075 / Version 2
Plan vérifié par JGR		Echelle 1:1 / Numéro du plan 15-B-057 / Feuille 1/1

University	Ecole Centrale de Lyon			**Car #**	81	**Part Cost**	$ 3,24
System	Suspension	**FileLink1**				**Qty**	1
Assembly	Front Uprights Assembly	**FileLink2**		**FileLink1**			
Part	Upper tab	**FileLink3**		**FileLink2**		**Extended Cost**	$ 3,24
P/N Base	SU 12003			**FileLink3**			
Suffix	AA						
Details							

ItemOrder	Material	Use	UnitCost	Size1	Unit1	Size2	Unit2	Area Name	Area	Length	Density	Quantity	Sub Total
10	Aluminum, Normal (per kg)	Upper tab	$ 4,20	0,09	kg			Rectangular area 30 x 30 mm	9,00E-04	0,038	2 710,00	1	$ 0,39
												Sub Total	**$ 0,39**

ItemOrder	Process	Use	UnitCost	Unit	Quantity	Multiplier	Mult. Val.	Sub Total
10	Machining Setup, Install and remove		$ 1,30	Unit	1			$ 1,30
20	Machining	Material removal - outer profile and slot	$ 0,04	cm^3	12,9	Material - Aluminum	1	$ 0,52
30	Machining Setup, Change		$ 0,65	Unit	1			$ 0,65
40	Machining	Material removal - lateral side	$ 0,04	cm^3	9,5	Material - Aluminum	1	$ 0,38
							Sub Total	**$ 2,85**

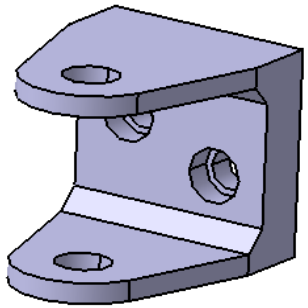

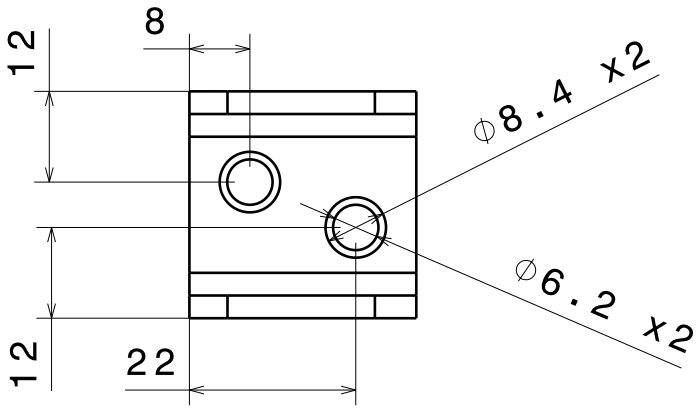

Vue de face
Echelle : 1:1

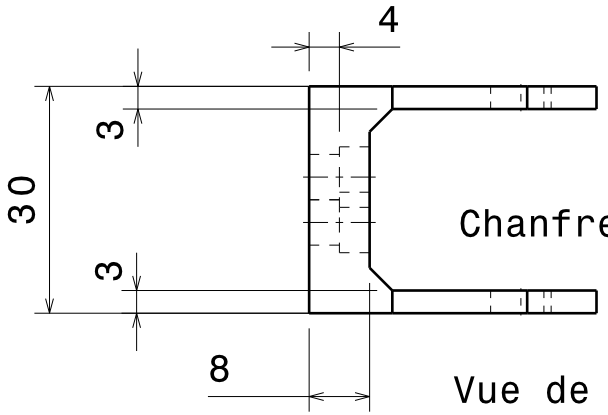

Chanfrein SLC

Vue de gauche
Echelle : 1:1

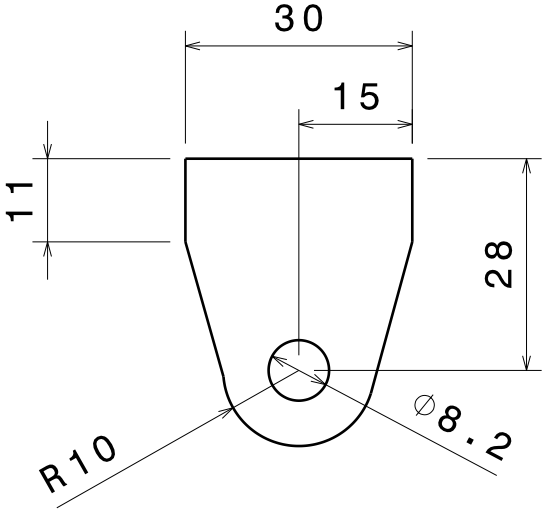

Vue de dessus
Echelle : 1:1

Taille Brut :
30x33x38
Tolérances Générales :
ISO 2768 mK

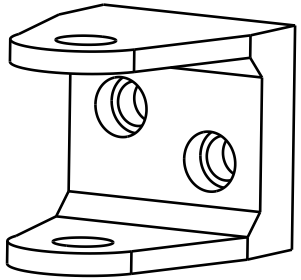

Vue isométrique
Echelle : 1:1

Taille A4		Ecurie Piston Sport Auto
Dessiné par Damien Turlay	Date 13/01/2015	Désignation Chape Triangle AvG
Coordonnées damien.turlay@ecl13.ec-lyon.fr 06 01 95 85 51		Quantité 2 / Matériau Aluminium 7075 / Version 1
Plan vérifié par JGR 488		Echelle 1:1 / Numéro du plan 15-B-056 / Feuille 1/1

University	Ecole Centrale de Lyon			**Car #**	81	**Part Cost**	$ 1,70
System	Suspension	**FileLink1**				**Qty**	2
Assembly	Front Uprights Assembly	**FileLink2**		**FileLink1**			
Part	Camber adjustment shims	**FileLink3**		**FileLink2**		**Extended Cost**	$ 3,40
P/N Base	SU 12004			**FileLink3**			
Suffix	AA						
Details							

ItemOrder	Material	Use	UnitCost	Size1	Unit1	Size2	Unit2	Area Name	Area	Length	Density	Quantity	Sub Total
10	Aluminum, Normal (per kg)	Camber adjustment shims	$ 4,20	0,04	kg			Rectangular area 30 x 30 mm	9,00E-04	0,015	2 710,00	1	$ 0,15
												Sub Total	**$ 0,15**

ItemOrder	Process	Use	UnitCost	Unit	Quantity	Multiplier	Mult. Val.	Sub Total
10	Machining Setup, Install and remove		$ 1,30		1			$ 1,30
20	Laser Cut	Camber adjustment shims	$ 0,01	cm	24,6	Material - Aluminum	1	$ 0,25
							Sub Total	**$ 1,55**

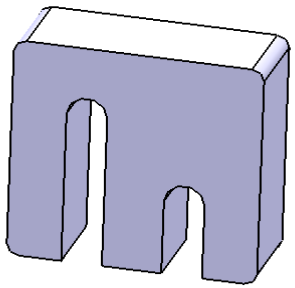

University	Ecole Centrale de Lyon			**Car #**	81	**Part Cost**	$ 1,33
System	Suspension	**FileLink1**				**Qty**	2
Assembly	Front Upright	**FileLink2**		**FileLink1**			
Part	Lower Spacer	**FileLink3**		**FileLink2**		**Extended Cost**	$ 2,67
P/N Base	SU 12005			**FileLink3**			
Suffix	AA						
Details							

ItemOrder	Material	Use	UnitCost	Size1	Unit1	Size2	Unit2	Area Name	Area	Length	Density	Quantity	Sub Total
10	Aluminum, Normal		$ 4,20	3,45E-03	kg			Cylindrical diameter 16 mm	2,54E-04	0,005	2 710,00	1	$ 0,01
												Sub Total	**$ 0,01**

ItemOrder	Process	Use	UnitCost	Unit	Quantity	Multiplier	Mult. Val.	Sub Total
10	Machining Setup, Install and remove		$ 1,30		1			$ 1,30
20	Machining		$ 0,04	cm^3	0,5	Material - Aluminum	1	$ 0,02
							Sub Total	**$ 1,32**

University	Ecole Centrale de Lyon			**Car #**	81	**Part Cost**	$ 1,37
System	Suspension	**FileLink1**				**Qty**	2
Assembly	Front Upright	**FileLink2**		**FileLink1**			
Part	Upper Spacer	**FileLink3**		**FileLink2**		**Extended Cost**	$ 2,74
P/N Base	SU 12006			**FileLink3**			
Suffix	AA						
Details							

ItemOrder	Material	Use	UnitCost	Size1	Unit1	Size2	Unit2	Area Name	Area	Length	Density	Quantity	Sub Total
10	Aluminum, Normal		$ 4,20	7,59E-03	kg			Cylindrical diameter 16 mm	2,54E-04	0,011	2 710,00	1	$ 0,03
												Sub Total	**$ 0,03**

ItemOrder	Process	Use	UnitCost	Unit	Quantity	Multiplier	Mult. Val.	Sub Total
10	Machining Setup, Install and remove		$ 1,30		1			$ 1,30
20	Machining		$ 0,04	cm^3	1	Material - Aluminum	1	$ 0,04
							Sub Total	**$ 1,34**

University	Ecole Centrale de Lyon	**Car #**	81	**Asm Cost**	$ 112,13
System	Suspension			**Qty**	2
Assembly	Rear Uprights Assembly	**FileLink1**			
P/N Base	SU A00013	**FileLink2**		**Extended Cost**	$ 224,26
Suffix	AA	**FileLink3**			
Details					

ItemOrder	Part	Part Cost	Quantity	Sub Total
10	Rear Uprights	$ 85,67	1	$ 85,67
20	Upper Tab	$ 3,70	2	$ 7,39
30	Camber adjustment shims	$ 1,76	2	$ 3,51
40	Lower Spacer	$ 1,33	2	$ 2,67
50	Upper Spacer	$ 1,37	2	$ 2,74
			Sub Total	**$ 101,98**

ItemOrder	Process	Use	UnitCost	Unit	Quantity	Multiplier	Mult. Val.	Sub Total
10	Assemble, 3 kg, Interference	Assemble with front hub	$ 0,56	Unit	1		1	$ 0,56
20	Assemble, 1 kg, Line-on-Line	Camber adjustment shims assemble	$ 0,13	Unit	2		1	$ 0,26
30	Assemble, 1 kg, Line-on-Line	Upper Tab assemble	$ 0,13	Unit	2		1	$ 0,26
40	Ratchet <= 25.4 mm	Bolt upper tab and upright	$ 0,75	Unit	4		1	$ 3,00
50	Reaction Tool <= 25.4 mm	Bolt upper tab and upright	$ 0,25	Unit	4		1	$ 1,00
60	Assemble, 1 kg, Loose	Upper and Lower spacers assemble	$ 0,06	Unit	6		1	$ 0,36
70	Assemble, 5 kg, Line-on-Line	Assembe with the frame	$ 0,63	Unit	1		1	$ 0,63
80	Ratchet <= 25.4 mm	Bolt upright with Front A arms	$ 0,75	Unit	3		1	$ 2,25
90	Reaction Tool <= 25.4 mm	Bolt upright with Front A arms	$ 0,25	Unit	3		1	$ 0,75
							Sub Total	**9,07**

ItemOrder	Fastener	Use	UnitCost	Size1	Unit1	Size2	Unit2	Quantity	Sub Total
10	Bolt, Grade 8.8 (SAE 5)	Upper tab fixing bolts	$ 0,12	6	mm	50	mm	4	$ 0,48
20	Bolt, Grade 8.8 (SAE 5)	Upright and A arms fixing bolts	$ 0,14	8	mm	35	mm	3	$ 0,42
30	Nut, Grade 8.8 (SAE 5)	Upright and A arms nuts	$ 0,04	8	mm			3	$ 0,12
40	Washer, Grade 8.8 (SAE 5)	Upright and A arms washers	$ 0,01	8	mm			6	$ 0,06
								Sub Total	**$ 1,08**

University	Ecole Centrale de Lyon			**Car #**	81	**Part Cost**	$ 85,67
System	Suspension	**FileLink1**				**Qty**	2
Assembly	Rear Uprights Assembly	**FileLink2**		**FileLink1**			
Part	SU A00013	**FileLink3**		**FileLink2**		**Extended Cost**	$ 171,33
P/N Base	SU 13001			**FileLink3**			
Suffix	AA						
Details							

ItemOrder	Material	Use	UnitCost	Size1	Unit1	Size2	Unit2	Area Name	Area	Length	Density	Quantity	Sub Total
10	Aluminum, Premium (per kg)	Front Uprights	$ 4,20	5,00	kg			Rectangular area 215 x 156 mm	3,35E-02	0,055	2 710,00	1	$ 21,00
												Sub Total	**$ 21,00**

ItemOrder	Process	Use	UnitCost	Unit	Quantity	Multiplier	Mult. Val.	Sub Total
10	Machining Setup, Install and remove		$ 1,30	Unit	1			$ 1,30
20	Laser cut	Material removal - outer profile and slot	$ 0,04	cm^3	1208	Material - Aluminum	1	$ 48,32
30	Machining Setup, Change		$ 0,65		1			$ 0,65
40	Machining	Stock removal	$ 0,04	cm^3	360	Material - Aluminum	1	$ 14,40
							Sub Total	**$ 64,67**

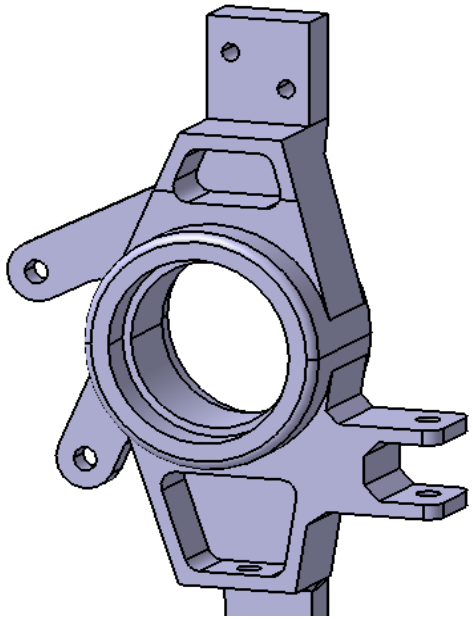

Taille Brut :
155.8x215.5x55
Tolérances Générales :
ISO 2768 mK
Tous les chanfreins sont à 45°

Pas de symetrie
sur les trous

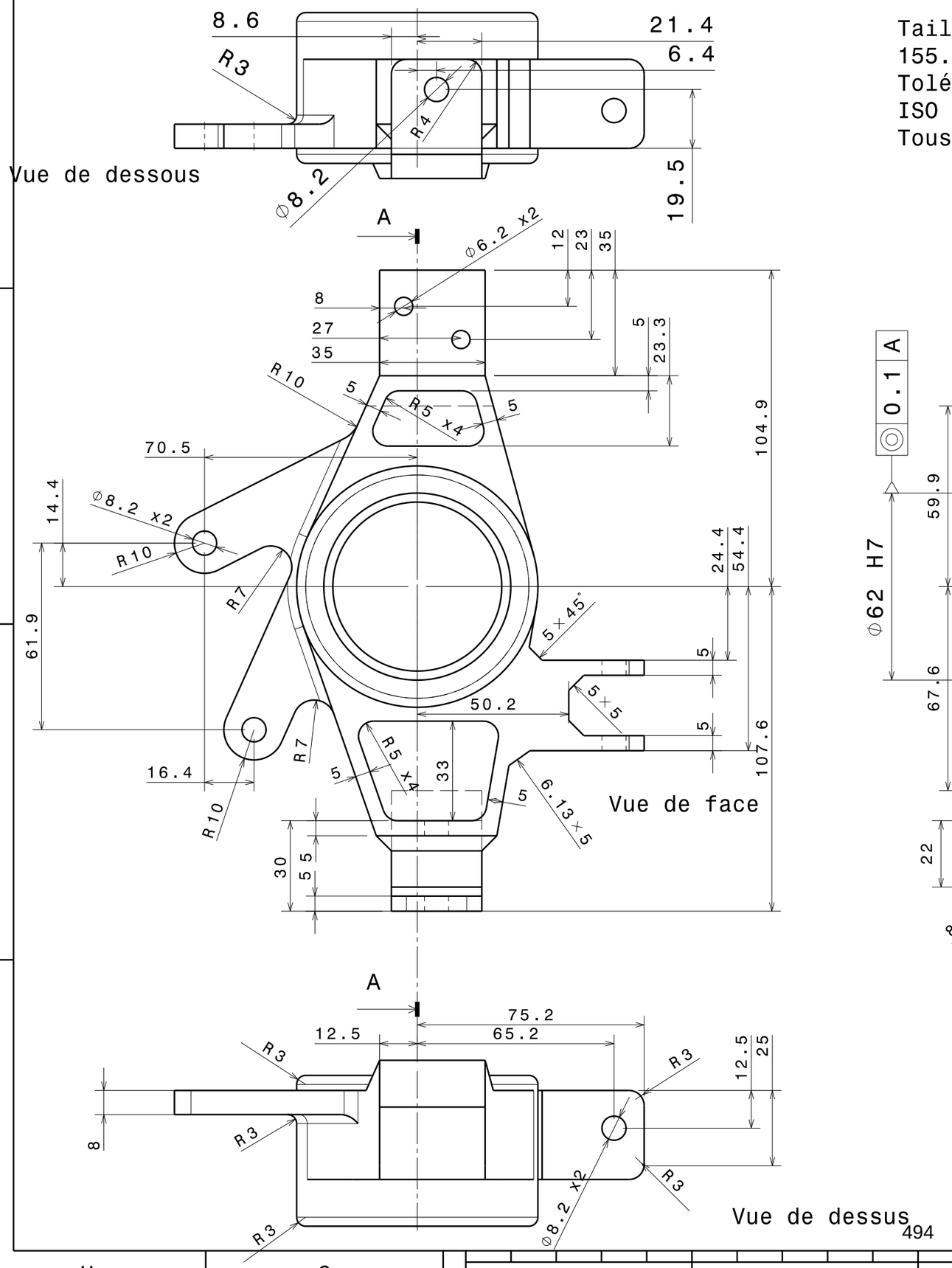

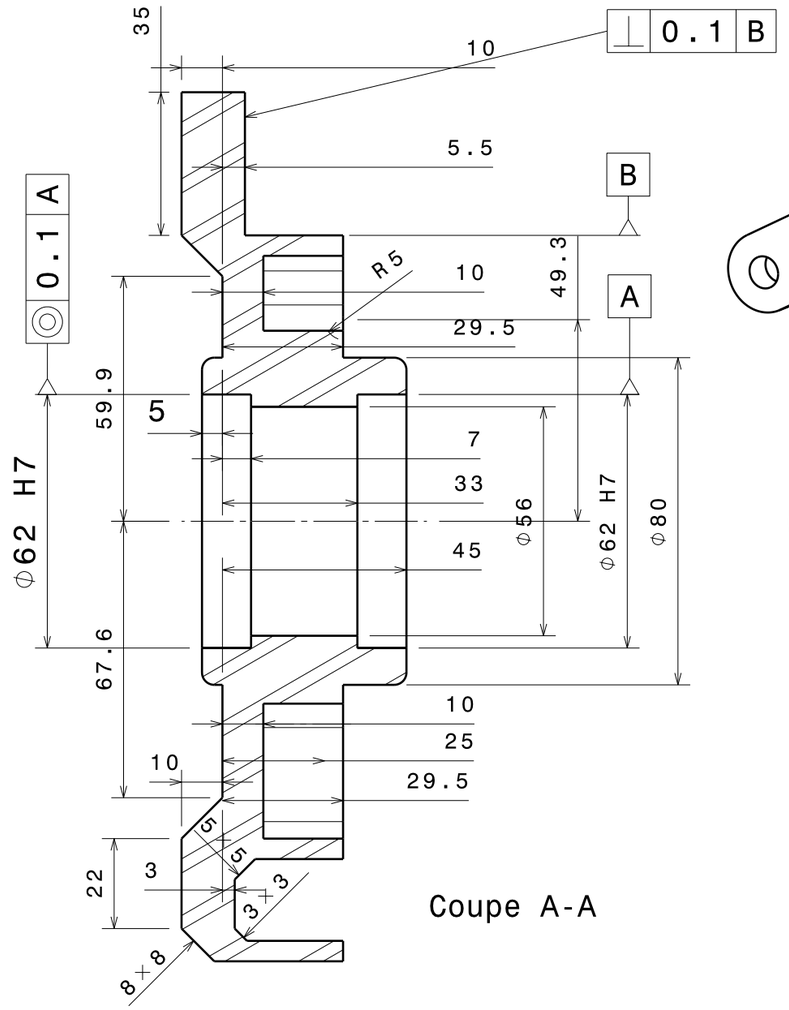

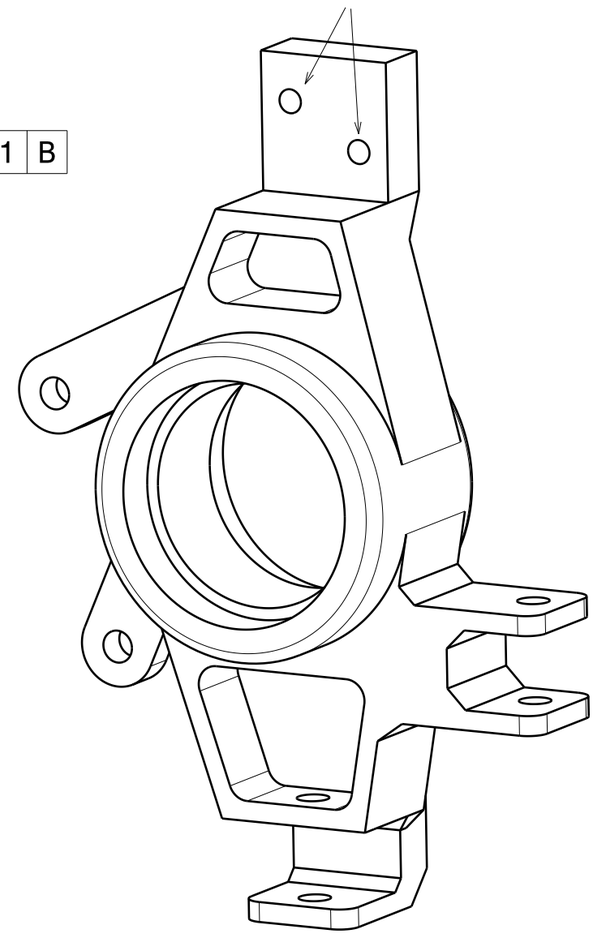

Vue isométrique

Taille A3		Ecurie Piston Sport Auto
Dessiné par Damien Turlay	Date 13/01/2015	Désignation Porte Moyeu ArG
Coordonnées damien.turlay@ecl13.ec-lyon.fr 06 01 95 85 51		Quantité 1+1 / Matériau Aluminium 7075 / Version 2
Plan vérifié par TDN, LBD et APA		Echelle 2:3 / Numéro du plan 15-B-051 / Feuille 1/1

University	Ecole Centrale de Lyon			**Car #**	81	**Part Cost**	$ 3,70
System	Suspension	**FileLink1**				**Qty**	4
Assembly	Rear Uprights Assembly	**FileLink2**		**FileLink1**			
Part	SU A00013	**FileLink3**		**FileLink2**		**Extended Cost**	$ 14,78
P/N Base	SU 13002			**FileLink3**			
Suffix	AA						
Details							

ItemOrder	Material	Use	UnitCost	Size1	Unit1	Size2	Unit2	Area Name	Area	Length	Density	Quantity	Sub Total
10	Aluminum, Normal (per kg)	Upper tab	$ 4,20	0,13	kg			Rectangular area 35 x 35 mm	1,23E-03	0,038	2 710,00	1	$ 0,53
												Sub Total	**$ 0,53**

ItemOrder	Process	Use	UnitCost	Unit	Quantity	Multiplier	Mult. Val.	Sub Total
10	Machining Setup, Install and remove		$ 1,30	Unit	1			$ 1,30
20	Machining	Material removal - outer profile and slot	$ 0,04	cm^3	15,4	Material - Aluminum	1	$ 0,62
30	Machining Setup, Change		$ 0,65	Unit	1			$ 0,65
40	Machining	Stock removal	$ 0,04	cm^3	15	Material - Aluminum	1	$ 0,60
							Sub Total	**$ 3,17**

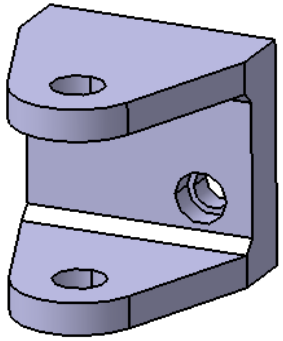

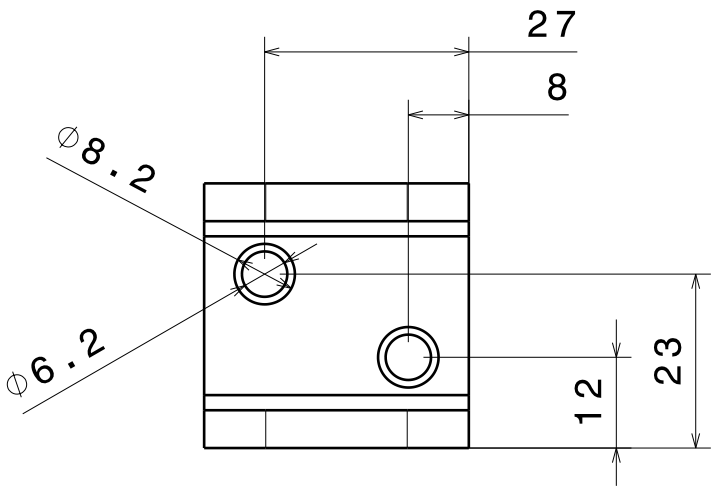

Vue de face
Echelle : 1:1

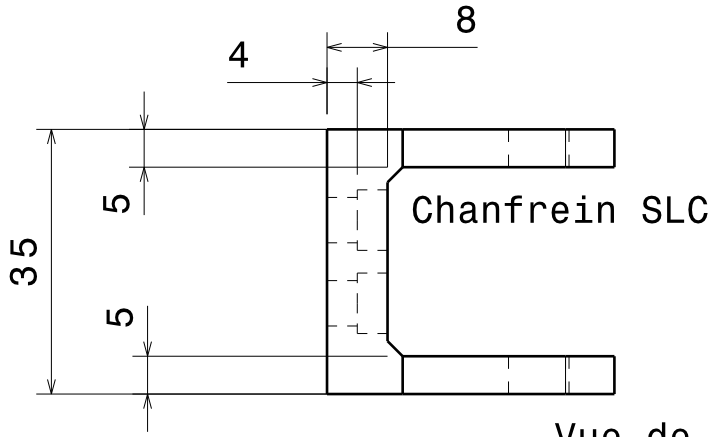

Vue de gauche
Echelle : 1:1

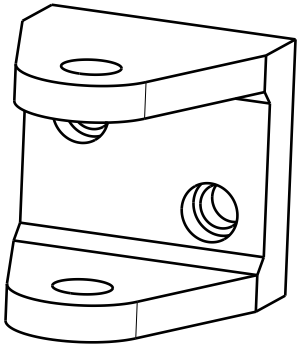

Vue isométrique
Echelle : 1:1

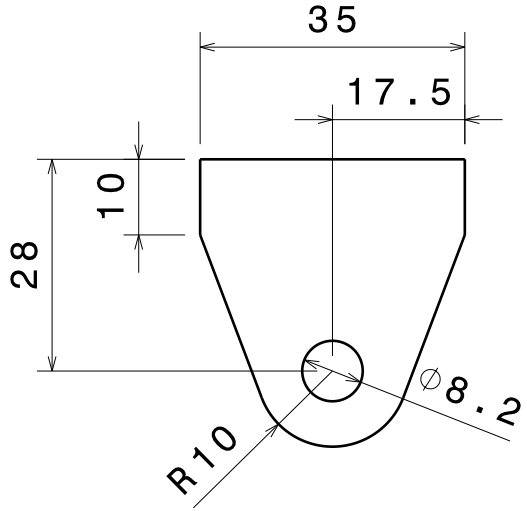

Vue de dessus
Echelle : 1:1

Taille Brut :
35x35x38
Tolérances Générales :
ISO 2768 mK

Taille A4		Ecurie Piston Sport Auto
Dessiné par Damien Turlay	Date 13/01/2015	Désignation Chape Triangle ArG
Coordonnées damien.turlay@ecl13.ec-lyon.fr 06 01 95 85 51	Quantité 2	Matériau Acier S235 / Version 1
Plan vérifié par JGR 496	Echelle 1:1	Numéro du plan 15-B-055 / Feuille 1/1

University	Ecole Centrale de Lyon			**Car #**	81	**Part Cost**	$ 1,76
System	Suspension	**FileLink1**				**Qty**	4
Assembly	Rear Uprights Assembly	**FileLink2**		**FileLink1**			
Part	SU A00013	**FileLink3**		**FileLink2**		**Extended Cost**	$ 7,02
P/N Base	SU 13003			**FileLink3**			
Suffix	AA						
Details							

ItemOrder	Material	Use	UnitCost	Size1	Unit1	Size2	Unit2	Area Name	Area	Length	Density	Quantity	Sub Total
10	Aluminum, Normal (per kg)	Camber adjustment shims	$ 4,20	0,05	kg			Rectangular area 35 x 35 mm	1,23E-03	0,015	2 710,00	1	$ 0,21
												Sub Total	**$ 0,21**

ItemOrder	Process	Use	UnitCost	Unit	Quantity	Multiplier	Mult. Val.	Sub Total
10	Machining Setup, Install and remove		$ 1,30	Unit	1			$ 1,30
20	Laser Cut	Camber adjustment shims	$ 0,01	cm	24,6	Material - Aluminum	1	$ 0,25
							Sub Total	**$ 1,55**

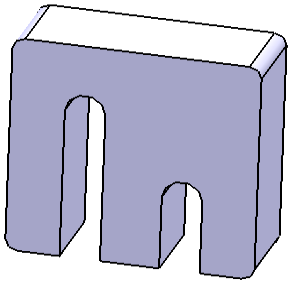

University	Ecole Centrale de Lyon			**Car #**	81	**Part Cost**	$ 1,33
System	Suspension	**FileLink1**				**Qty**	4
Assembly	Rear Uprights Assembly	**FileLink2**		**FileLink1**			
Part	SU A00013	**FileLink3**		**FileLink2**		**Extended Cost**	$ 5,34
P/N Base	SU 13004			**FileLink3**			
Suffix	AA						
Details							

ItemOrder	Material	Use	UnitCost	Size1	Unit1	Size2	Unit2	Area Name	Area	Length	Density	Quantity	Sub Total
10	Aluminum, Normal		$ 4,20	3,45E-03	kg			Cylindrical diameter 16 mm	2,54E-04	0,005	2 710,00	1	$ 0,01
												Sub Total	**$ 0,01**

ItemOrder	Process	Use	UnitCost	Unit	Quantity	Multiplier	Mult. Val.	Sub Total
10	Machining Setup, Install and remove		$ 1,30		1			$ 1,30
20	Machining		$ 0,04	cm^3	0,5	Material - Aluminum	1	$ 0,02
							Sub Total	**$ 1,32**

University	Ecole Centrale de Lyon			**Car #**	81	**Part Cost**	$ 1,37
System	Suspension	**FileLink1**				**Qty**	8
Assembly	Rear Uprights Assembly	**FileLink2**		**FileLink1**			
Part	SU A00013	**FileLink3**		**FileLink2**		**Extended Cost**	$ 10,97
P/N Base	SU 13005			**FileLink3**			
Suffix	AA						
Details							

ItemOrder	Material	Use	UnitCost	Size1	Unit1	Size2	Unit2	Area Name	Area	Length	Density	Quantity	Sub Total
10	Aluminum, Normal		$ 4,20	7,59E-03	kg			Cylindrical diameter 16 mm	2,54E-04	0,011	2 710,00	1	$ 0,03
												Sub Total	**$ 0,03**

ItemOrder	Process	Use	UnitCost	Unit	Quantity	Multiplier	Mult. Val.	Sub Total
10	Machining Setup, Install and remove		$ 1,30		1			$ 1,30
20	Machining		$ 0,04	cm^3	1	Material - Aluminum	1	$ 0,04
							Sub Total	**$ 1,34**

ÉCOLE CENTRALE LYON

WHEELS & TIRES

EPSA TEAM

CAR # 81

Ecurie Piston Sport Auto

University	Ecole Cenrale de Lyon	**Car #**	81	**Asm Cost**	$ 172,41
System	Wheels and Tires			**Qty**	4
Assembly	Wheel Assembly	**FileLink1**			
P/N Base	WT A0001	**FileLink2**		**Extended Cost**	$ 689,64
Suffix	AA	**FileLink3**			
Details	Complete wheel assembly				

ItemOrder	Part	Part Cost	Quantity	Sub Total
10	Wheels	$ 77,50	1	$ 77,50
20	Tires	$ 85,00	1	$ 85,00
30	Valve stem	$ 1,00	1	$ 1,00
			Sub Total	**$ 163,50**

ItemOrder	Material	Use	UnitCost	Size1	Unit1	Size2	Unit2	Area Name	Area	Length	Density	Quantity	Sub Total
10	Wheel Weights (and Balancing)		$ 4,00									1	$ 4,00
												Sub Total	**$ 4,00**

ItemOrder	Process	Use	UnitCost	Unit	Quantity	Multiplier	Mult. Val.	Sub Total
10	Assemble, 5kg, loose	Fix Wheels on Hub	$ 0,31	unit	1		1	$ 0,31
20	Ratchet <=25.4mm	Tighten Lug Nuts	$ 0,75	labor	4		1	$ 3,00
							Sub Total	**$ 3,31**

ItemOrder	Fastener	Use	UnitCost	Size1	Unit1	Size2	Unit2	Quantity	Sub Total
10	Nut, Lug	Lug Nuts	$ 0,40					4	$ 1,60
								Sub Total	**$ 1,60**

University	Ecole Centrale de Lyon			**Car #**	81	**Part Cost**	$ 77,50
System	Wheels and Tires	**FileLink1**				**Qty**	4
Assembly	Wheel Assembly	**FileLink2**		**FileLink1**			
Part	Wheel	**FileLink3**		**FileLink2**		**Extended Cost**	$ 310,00
P/N Base	WT 01001			**FileLink3**			
Suffix	AA						
Details	Keizer 10i wheels						

ItemOrder	Material	Use	UnitCost	Size1	Unit1	Size2	Unit2	Area Name	Area	Length	Density	Quantity	Sub Total
10	Wheel, 10", 3 Piece, Keizer, Aluminum	Wheels	$ 77,50									1	$ 77,50
												Sub Total	**$ 77,50**

University	Ecole Centrale de Lyon			**Car #**	81	**Part Cost**	$ 85,00
System	Wheels and Tires	**FileLink1**				**Qty**	4
Assembly	Wheel Assembly	**FileLink2**		**FileLink1**			
Part	Tire	**FileLink3**		**FileLink2**		**Extended Cost**	$ 340,00
P/N Base	WT 01002			**FileLink3**			
Suffix	AA						
Details	Hoosier LC0 10"						

ItemOrder	Material	Use	UnitCost	Size1	Unit1	Size2	Unit2	Area Name	Area	Length	Density	Quantity	Sub Total
10	Tire, Hoosier, LC0, 10"-18.0 x 6.0		$ 85,00									1	$ 85,00
												Sub Total	**$ 85,00**

University	Ecole Centrale de Lyon			**Car #**	81	**Part Cost**	$ 1,00
System	Wheels and Tires	**FileLink1**				**Qty**	4
Assembly	Wheel Assembly	**FileLink2**		**FileLink1**			
Part	Valve stem	**FileLink3**		**FileLink2**		**Extended Cost**	$ 4,00
P/N Base	WT 01003			**FileLink3**			
Suffix	AA						
Details	Purchased Valve Stem						

ItemOrder	Material	Use	UnitCost	Size1	Unit1	Size2	Unit2	Area Name	Area	Length	Density	Quantity	Sub Total
10	Valve stem (and inflation tire)		1		unit							1	$ 1,00
												Sub Total	**$ 1,00**

University	Ecole Centrale de Lyon	**Car #**	81	**Asm Cost**	$ 379,02
System	Wheels and Tires			**Qty**	2
Assembly	Front Hubs	**FileLink1**			
P/N Base	WT A0002	**FileLink2**		**Extended Cost**	$ 758,04
Suffix	AA	**FileLink3**			
Details					

ItemOrder	Part	Part Cost	Quantity	Sub Total
10	Front Hub	$ 68,21	1	$ 68,21
20	Bearings	$ 122,59	2	$ 245,18
30	Front Spacer	$ 28,56	1	$ 28,56
			Sub Total	**$ 341,95**

ItemOrder	Material	Use	UnitCost	Size1	Unit1	Size2	Unit2	Area Name	Area	Length	Density	Quantity	Sub Total
10	Locknut/L.P.///Steel/	Bearing Nuts	$ 9,13	60	mm							2	$ 18,26
												Sub Total	**$ 18,26**

ItemOrder	Process	Use	UnitCost	Unit	Quantity	Multiplier	Mult. Val.	Sub Total
10	Assemble, 1 kg, Interference	Wheel studs and hub assemble	$ 0,19	Unit	4		1	$ 0,76
20	Assemble, 1 kg, Interference	Bearings assemble	$ 0,19	Unit	2			$ 0,38
40	Assemble, 1 kg, Interference	Spacer	$ 0,19	Unit	1			$ 0,19
30	Wrench > 25.4 mm	Bearing nuts	$ 2,00	Unit	2			$ 4,00
							Sub Total	**$ 5,33**

ItemOrder	Fastener	Use	UnitCost	Size1	Unit1	Size2	Unit2	Quantity	Sub Total
10	Stud, Grade 12.9	Wheel studs	$ 3,37	12	mm	150	mm	4	$ 13,48
								Sub Total	**$ 13,48**

University	Ecole Centrale de Lyon			**Car #**	81	**Part Cost**	$ 68.21
System	Wheels and tires	**FileLink1**				**Qty**	1
Assembly	Front Hubs	**FileLink2**		**FileLink1**			
Part	Front hub	**FileLink3**		**FileLink2**		**Extended Cost**	$ 68.21
P/N Base	WT 02001			**FileLink3**			
Suffix	AA						
Details							

ItemOrder	Material	Use	UnitCost	Size1	Unit1	Size2	Unit2	Area Name	Area	Length	Density	Quantity	Sub Total
10	Aluminum, Premium (per kg)	Front Hub	$ 4.20	3.75	kg			Circular diam140mm	1.54E-02	0.090	2 710.00	1	$ 15.76
												Sub Total	**$ 15.76**

ItemOrder	Process	Use	UnitCost	Unit	Quantity	Multiplier	Mult. Val.	Sub Total
10	Machining Setup, Install and remove		$ 1.30	Unit	1			$ 1.30
20	Machining	Turning	$ 0.04	cm^3	1119	Material - Aluminum	1	$ 44.76
30	Machining Setup, Change		$ 0.65		1			$ 0.65
40	Machining	Milling	$ 0.04	cm^3	130	Material - Aluminum	1	$ 5.20
50	Threading, Internal (machining)		$ 0.10	cm	3			$ 0.30
60	Threading, External (machining)		$ 0.10	cm	2.4			$ 0.24
							Sub Total	**$ 52.45**

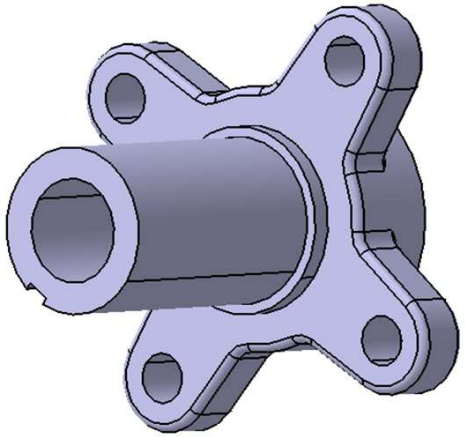

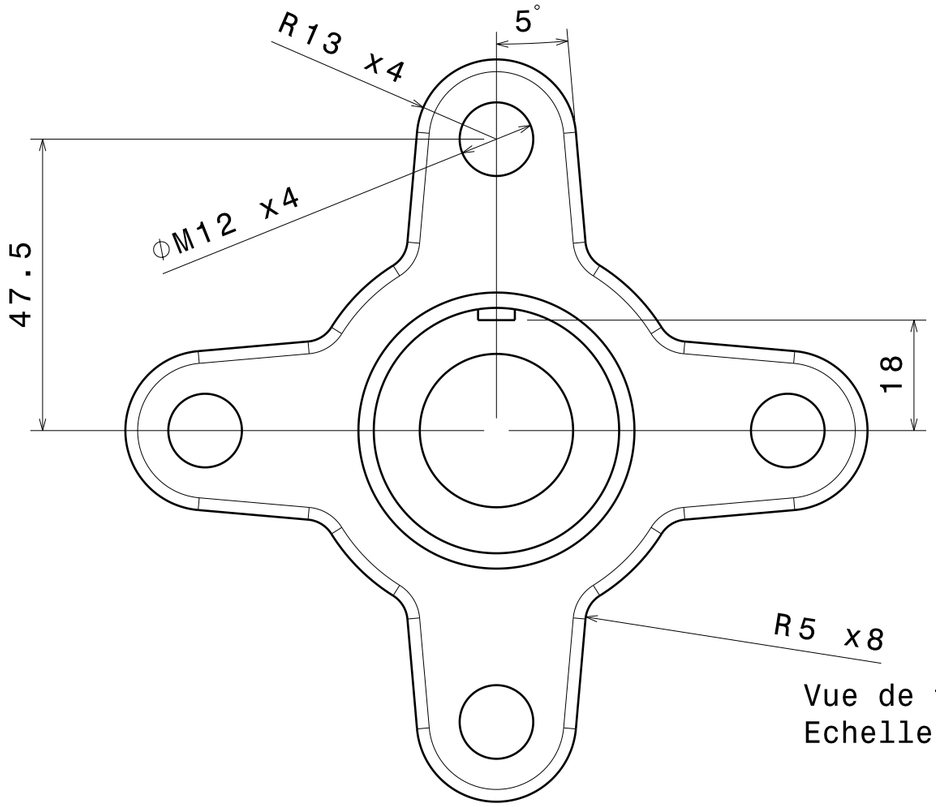

Vue de face
Echelle : 1:1

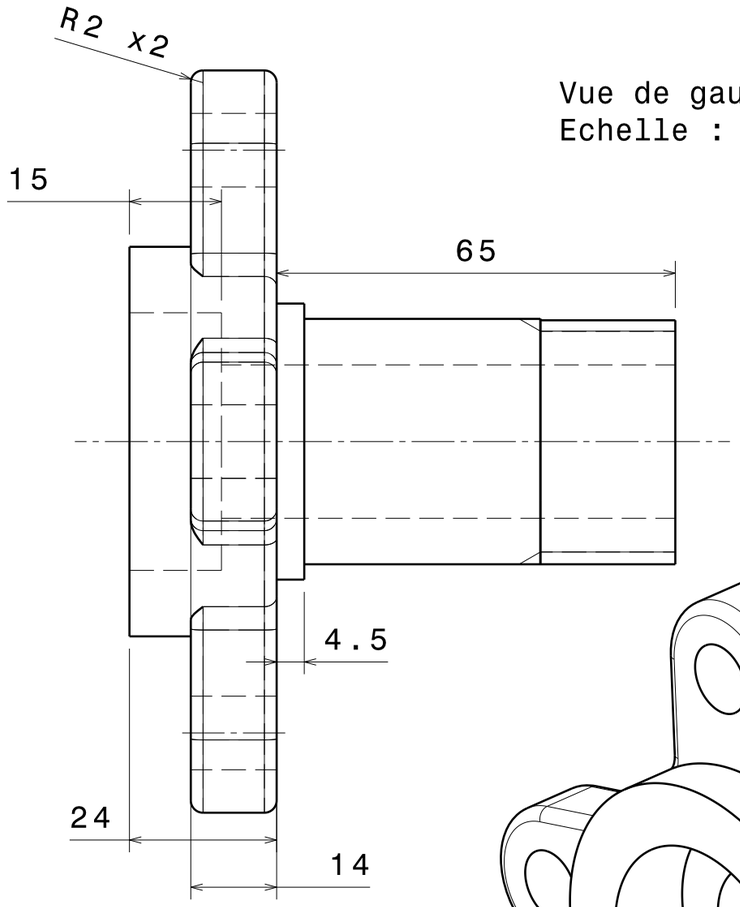

Vue de gauche
Echelle : 1:1

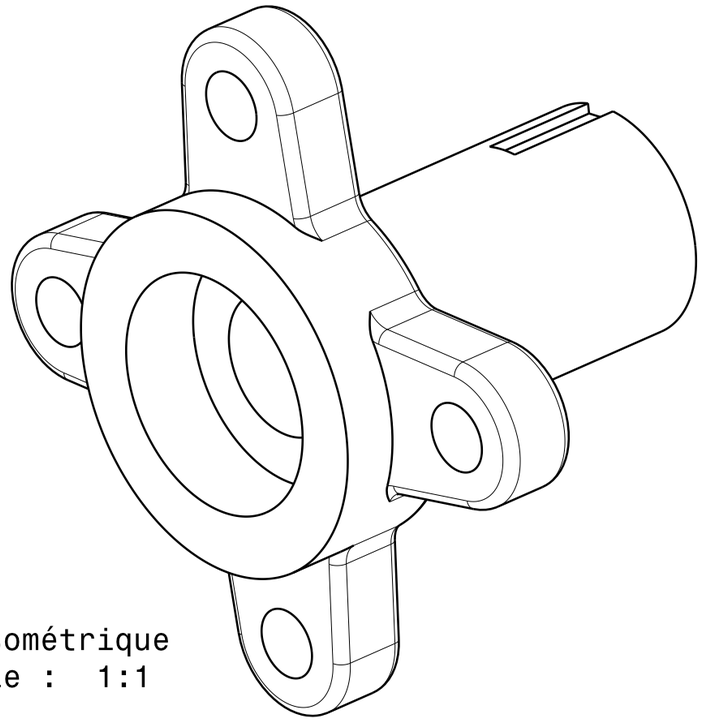

Vue isométrique
Echelle : 1:1

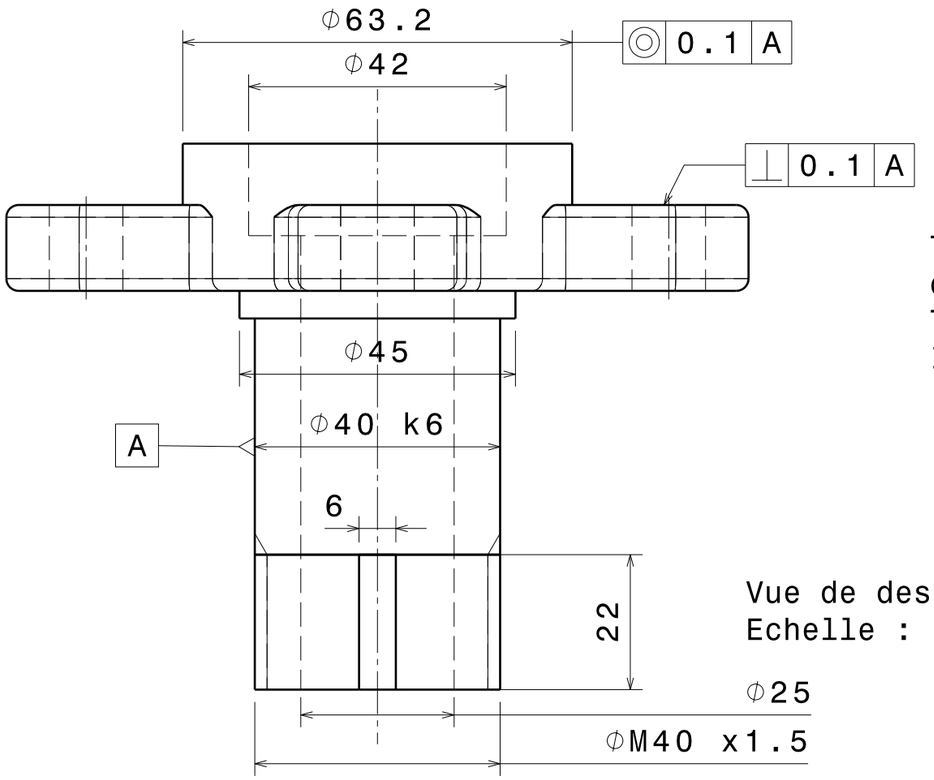

Vue de dessus
Echelle : 1:1

Taille Brut :
diam121x89
Tolérances Générales :
ISO 2768 mK

Taille A3		Ecurie Piston Sport Auto
Dessiné par Damien Turlay	Date 13/01/2015	Désignation Moyeu Avant
Coordonnées damien.turlay@ecl13.ec-lyon.fr 06 01 95 85 51		Quantité 2 / Matériau Aluminium 7075 / Version 1
Plan vérifié par TDN, LBD et JGR		Echelle 1:1 / Numéro du plan 15-B-050 / Feuille 1/1

University	Ecole Centrale de Lyon			**Car #**	81	**Part Cost**	$ 122.59
System	Wheels and tires	**FileLink1**				**Qty**	2
Assembly	Front Hubs	**FileLink2**		**FileLink1**			
Part	Bearings	**FileLink3**		**FileLink2**		**Extended Cost**	$ 245.18
P/N Base	WT 02002			**FileLink3**			
Suffix	AA						
Details	FAG Bearings						

ItemOrder	Material	Use	UnitCost	Size1	Unit1	Size2	Unit2	Area Name	Area	Length	Density	Quantity	Sub Total
10	Wheel Bearing, Ball, Angular Contact	Wheel Bearings	$ 122.59	62.00	mm	12	mm					1	$ 122.59
												Sub Total	**$ 122.59**

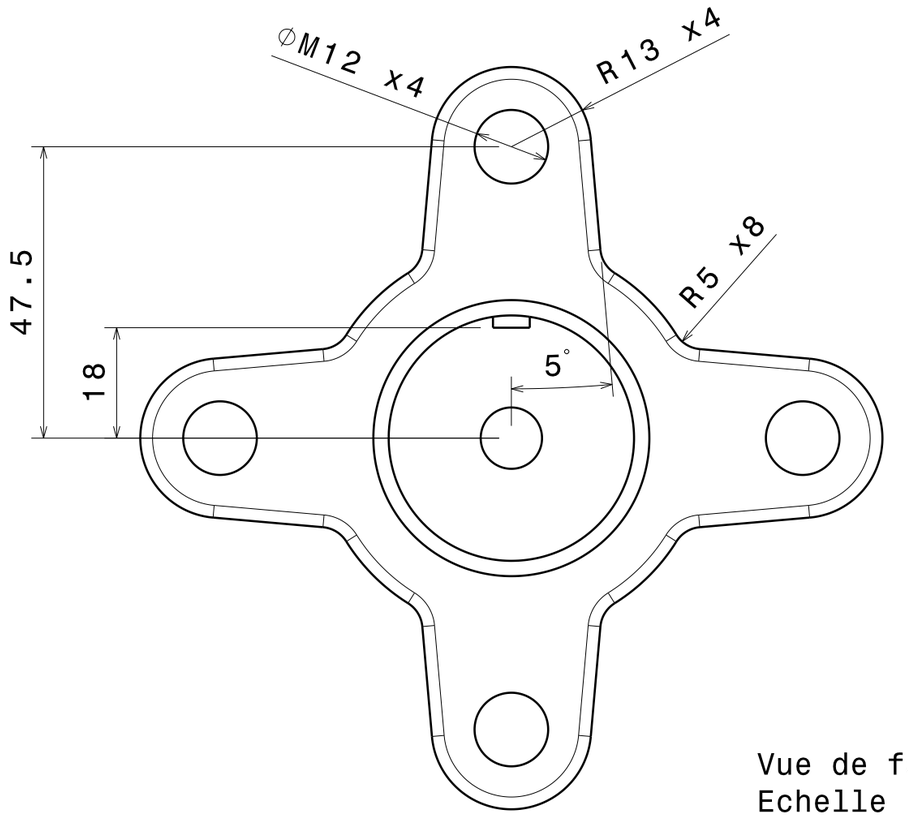

Vue de face
Echelle : 1:1

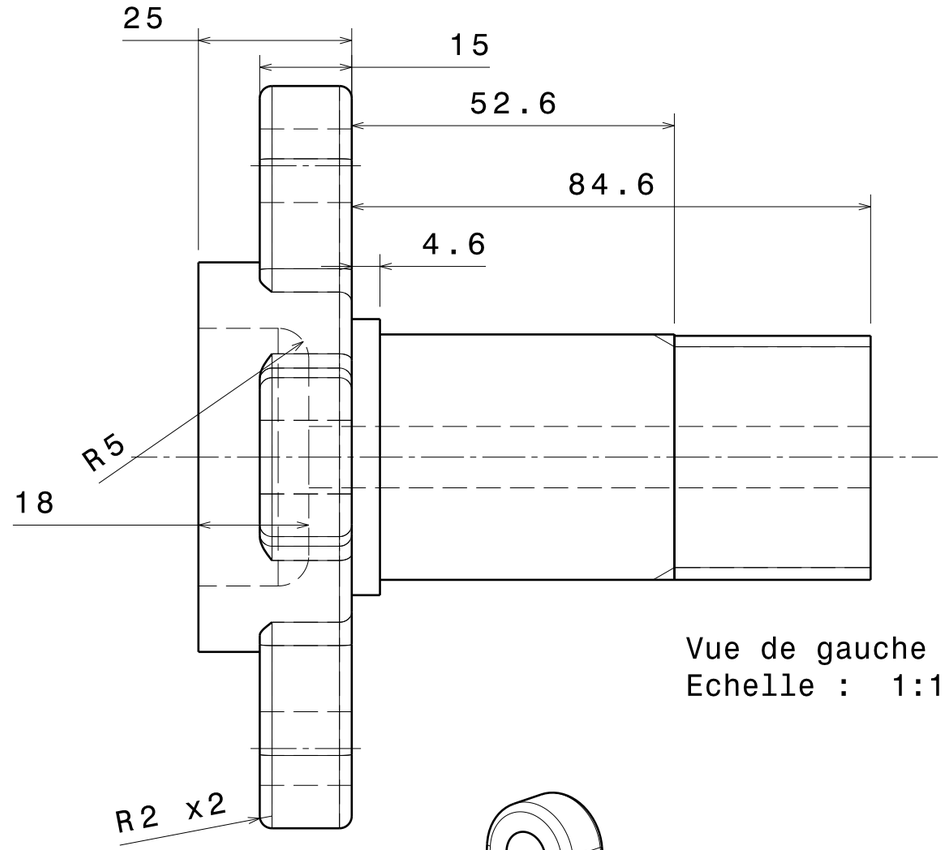

Vue de gauche
Echelle : 1:1

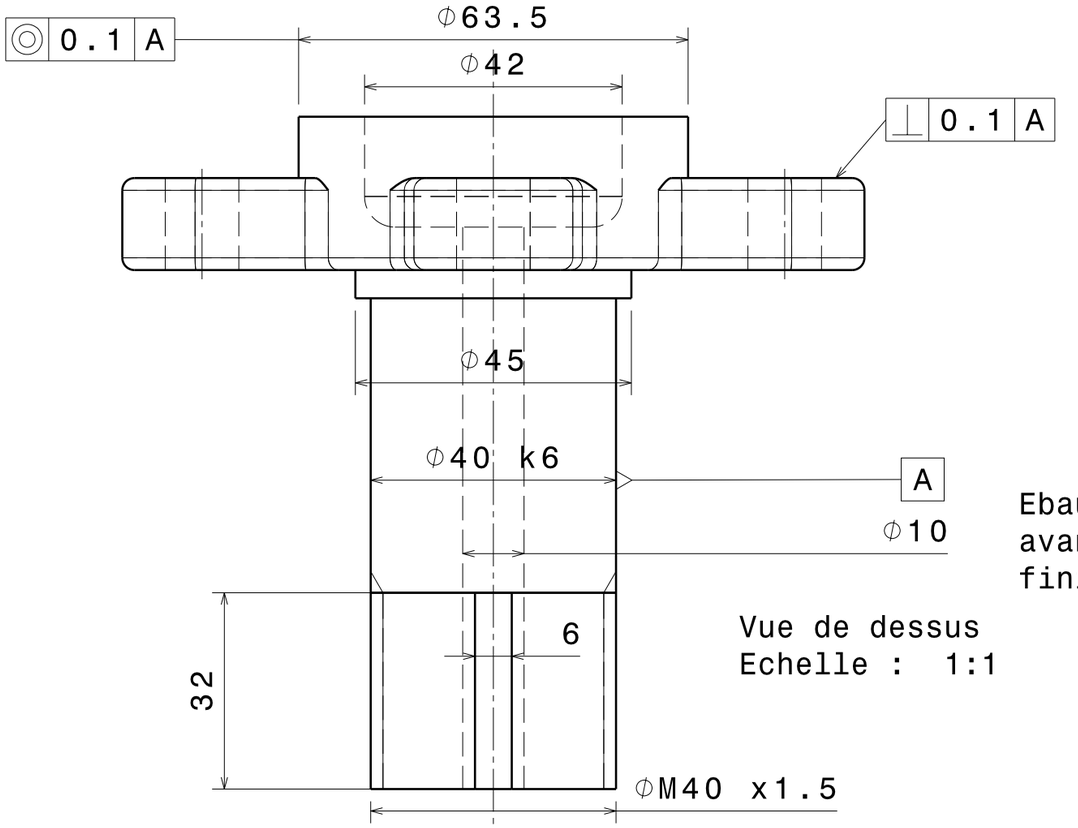

Vue de dessus
Echelle : 1:1

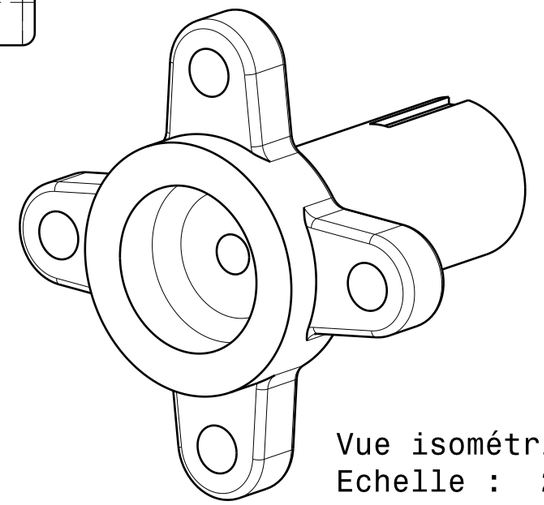

Vue isométrique
Echelle : 2:3

Taille Brut :
diam121x98.6
Tolérances Générales :
ISO 2768 mK

Ebauche
avant
finition

Taille A3		Ecurie Piston Sport Auto
Dessiné par Damien Turlay	Date 13/01/2015	Désignation Moyeu ArG
Coordonnées damien.turlay@ecl13.ec-lyon.fr 06 01 95 85 51	Quantité 2	Matériau Aluminium 7075 / Version 1
Plan vérifié par TDN, LBD et JGR	Echelle 1:1	Numéro du plan 15-B-053 / Feuille 1/1

509

University	Ecole Centrale de Lyon			**Car #**	81	**Part Cost**	$ 28.56
System	Wheels and Tires	**FileLink1**				**Qty**	1
Assembly	Front Hubs	**FileLink2**		**FileLink1**			
Part	Front spacer	**FileLink3**		**FileLink2**		**Extended Cos**	$ 28.56
P/N Base	WT 02003			**FileLink3**			
Suffix	AA						
Details							

ItemOrder	Material	Use	UnitCost	Size1	Unit1	Size2	Unit2	Area Name	Area	Length	Density	Quantity	Sub Total
10	Aluminium, Normal	Stock material for part	$ 4.20	60	mm			circle area	1.13E-02	0.052	2 710	1.00	$ 6.69
												Sub Total	**$ 6.69**

ItemOrder	Process	Use	UnitCost	Unit	Quantity	Multiplier	Mult. Val.	Sub Total
10	Machining Setup, Install and remove		$1.30	unit	1			$1.30
20	Machining	Half external shape and central hole	$ 0.04	cm^3	135	Material - Aluminium	1	$ 5.39
30	Machining Setup, Change		$ 0.65	unit	1			$ 0.65
40	Machning	Second Half external shape and central hole	$ 0.04	cm^3	135	Material - Aluminium	1	$ 5.40
50	Machining Setup, Change		$ 0.65	unit	1			$ 0.65
60	Machning	Radial weigth reduction	$ 0.04	cm^3	122	Material - Aluminium	1	$ 4.90
70	Machining Setup, Change		$ 0.65	unit	1			$ 0.65
80	Machning	Axial weight reduction and holes	$ 0.04	cm^3	73	Material - Aluminium	1	$ 2.93
							Sub Total	**$ 21.87**

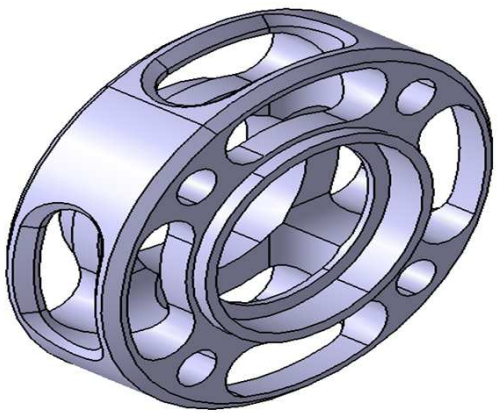

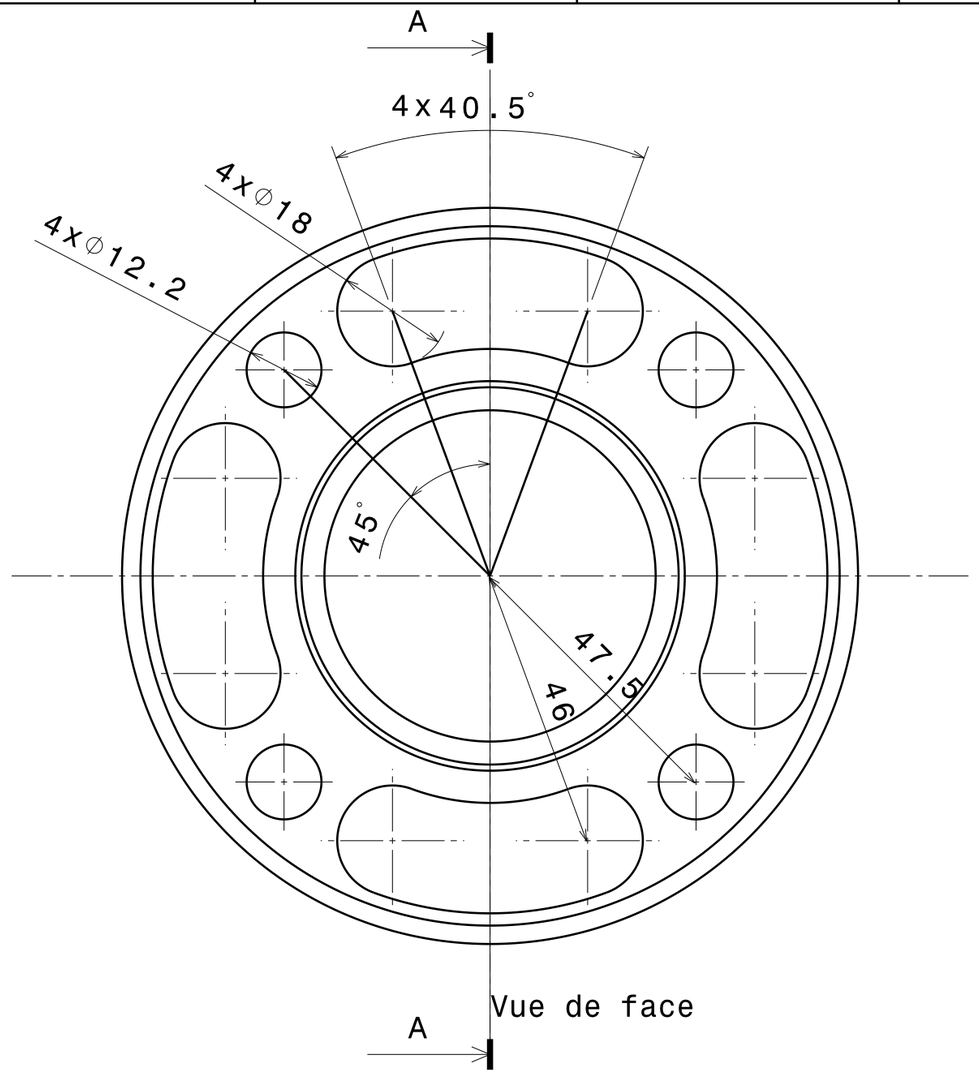

Vue de face

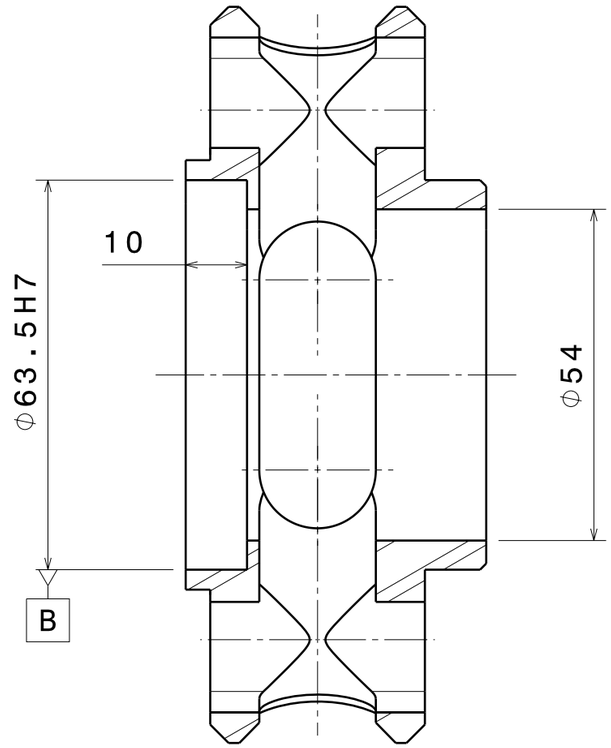

Coupe A-A

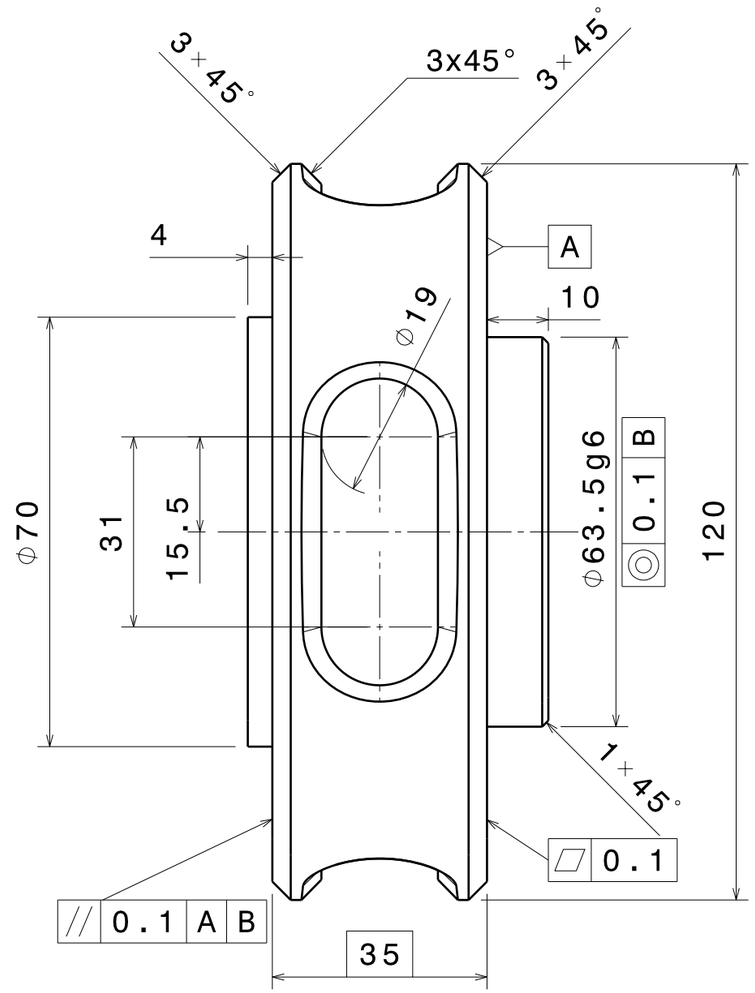

Vue de gauche

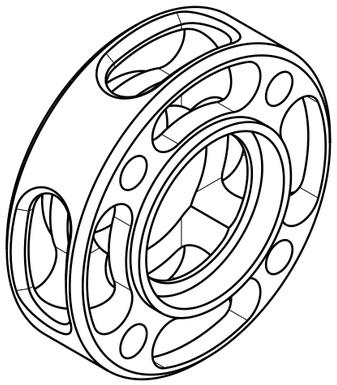

Vue isométrique
Echelle : 1:2

Tolérances Générales ISO 2768 - mK

Taille A3		Ecurie Piston Sport Auto
Dessiné par Luc	Date 04/02/2015	Désignation Elargisseur de voie avant
Coordonnées lbrossar@ec-lyon.fr 06.59.15.53.71		Quantité 2 / Matériau Aluminium 2017 / Version 0.9
Plan vérifié par SCU		Echelle 1:1 / Numéro du plan 15-B-052 / Feuille 1/1

University	Ecole Centrale de Lyon	**Car #**	81	**Asm Cost**	$ 400,12
System	Wheels and Tires			**Qty**	2
Assembly	Rear Hubs	**FileLink1**			
P/N Base	WT A0003	**FileLink2**		**Extended Cost**	$ 800,24
Suffix	AA	**FileLink3**			
Details					

ItemOrder	Part	Part Cost	Quantity	Sub Total
10	Rear Hub	$ 83,59	1	$ 83,59
20	Bearings	$ 122,59	2	$ 245,18
30	Rear spacer	$ 34,27	1	$ 34,27
			Sub Total	**$ 363,05**

ItemOrder	Material	Use	UnitCost	Size1	Unit1	Size2	Unit2	Area Name	Area	Length	Density	Quantity	Sub Total
10	Locknut/L.P.///Steel/	Bearing Nuts	$ 9,13	60	mm							2	$ 18,26
												Sub Total	**$ 18,26**

ItemOrder	Process	Use	UnitCost	Unit	Quantity	Multiplier	Mult. Val.	Sub Total
10	Assemble, 1 kg, Interference	Wheel studs and hub assemble	$ 0,19	Unit	4		1	$ 0,76
20	Assemble, 1 kg, Interference	Bearings assemble	$ 0,19	Unit	2			$ 0,38
30	Assemble, 1 kg, Interference	Spacer	$ 0,19	Unit	1			$ 0,19
40	Wrench > 25.4 mm	Bearing nuts	$ 2,00	Unit	2			$ 4,00
							Sub Total	**$ 5,33**

ItemOrder	Fastener	Use	UnitCost	Size1	Unit1	Size2	Unit2	Quantity	Sub Total
10	Stud, Grade 12.9	Wheel studs	$ 3,37	12	mm	150	mm	4	$ 13,48
								Sub Total	**$ 13,48**

University	Ecole Centrale de Lyon			**Car #**	81	**Part Cost**	$ 83,59
System	Wheels and tires	**FileLink1**				**Qty**	1
Assembly	Rear Hubs	**FileLink2**		**FileLink1**			
Part	Rear hub	**FileLink3**		**FileLink2**		**Extended Cost**	$ 83,59
P/N Base	WT 03001			**FileLink3**			
Suffix	AA						
Details							

ItemOrder	Material	Use	UnitCost	Size1	Unit1	Size2	Unit2	Area Name	Area	Length	Density	Quantity	Sub Total
10	Aluminum, Premium (per kg)	Rear Hub	$ 4,20	4,59	kg			Circular diam140mm	1,54E-02	0,110	2 710,00	1	$ 19,26
												Sub Total	**$ 19,26**

ItemOrder	Process	Use	UnitCost	Unit	Quantity	Multiplier	Mult. Val.	Sub Total
10	Machining Setup, Install and remove		$ 1,30	Unit	1			$ 1,30
20	Machining	Turning	$ 0,04	cm^3	1361	Material - Aluminum	1	$ 54,44
30	Machining Setup, Change		$ 0,65		1			$ 0,65
40	Machining	Milling	$ 0,04	cm^3	140	Material - Aluminum	1	$ 5,60
50	Threading, Internal (machining)		$ 0,10	cm	3			$ 0,30
60	Threading, External (machining)		$ 0,10	cm	2,4			$ 0,24
70	Broach, Internal		$ 0,50	cm	3,6			$ 1,80
							Sub Total	**$ 64,33**

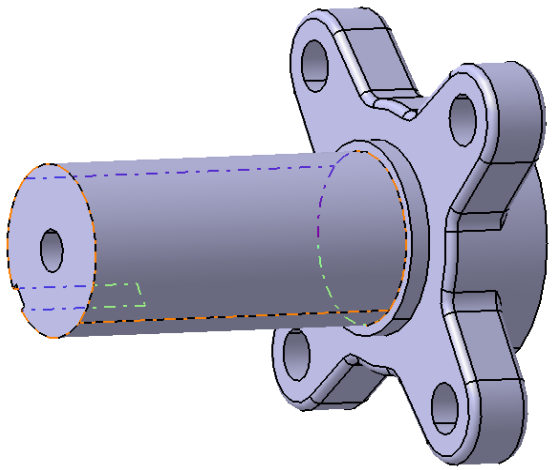

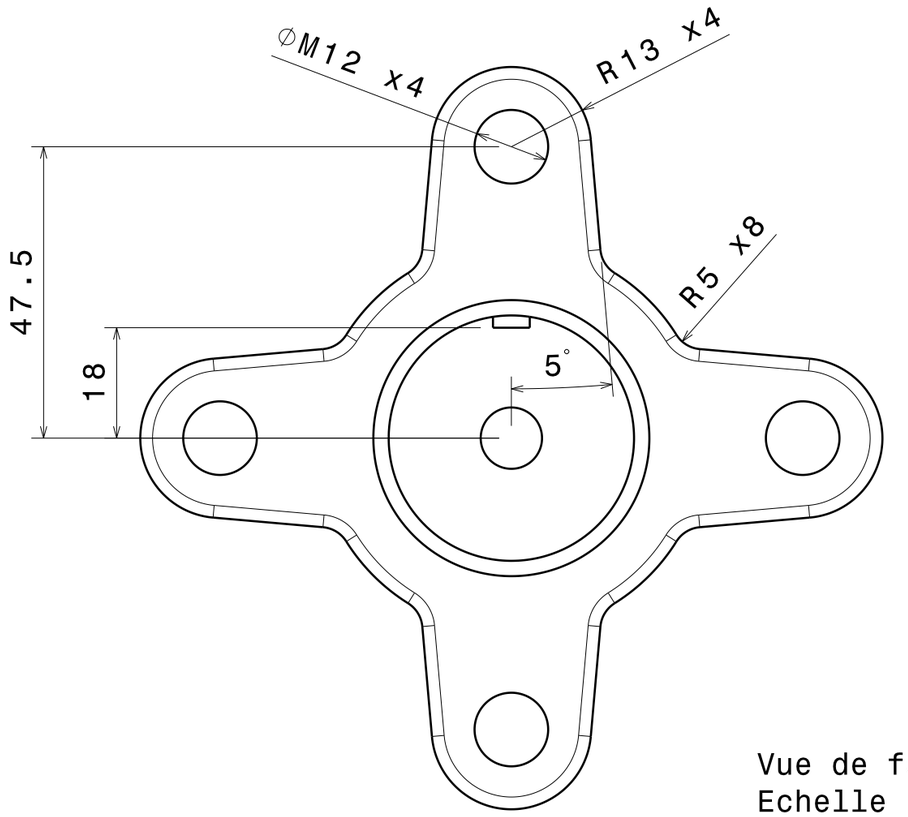

Vue de face
Echelle : 1:1

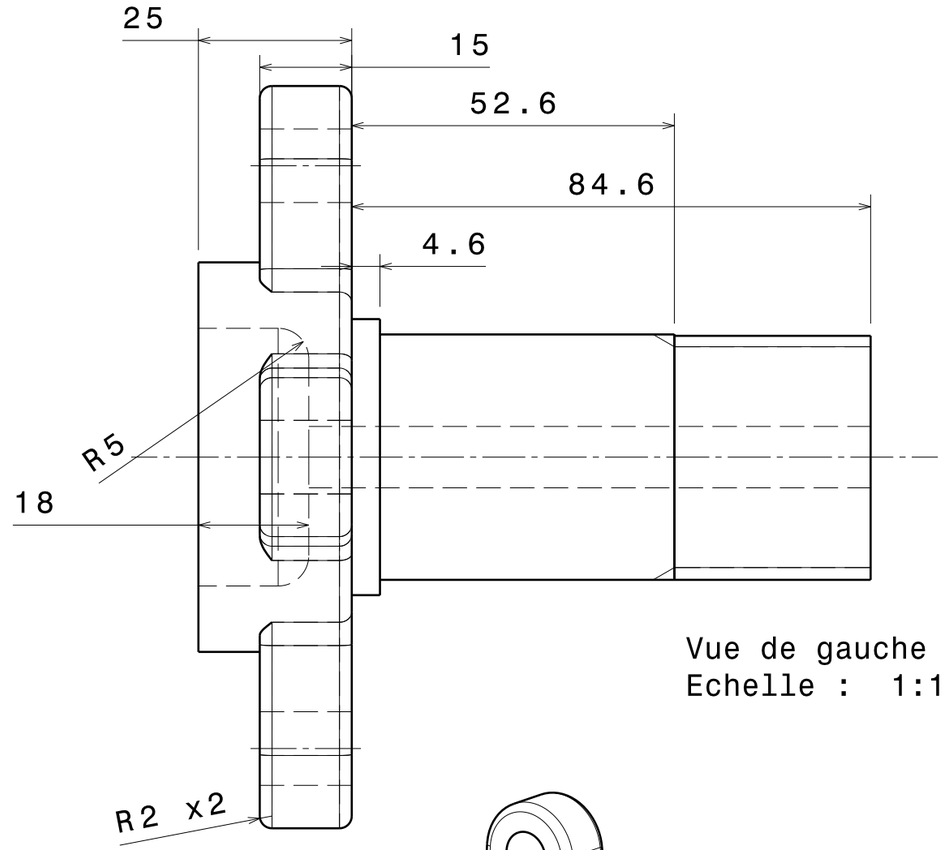

Vue de gauche
Echelle : 1:1

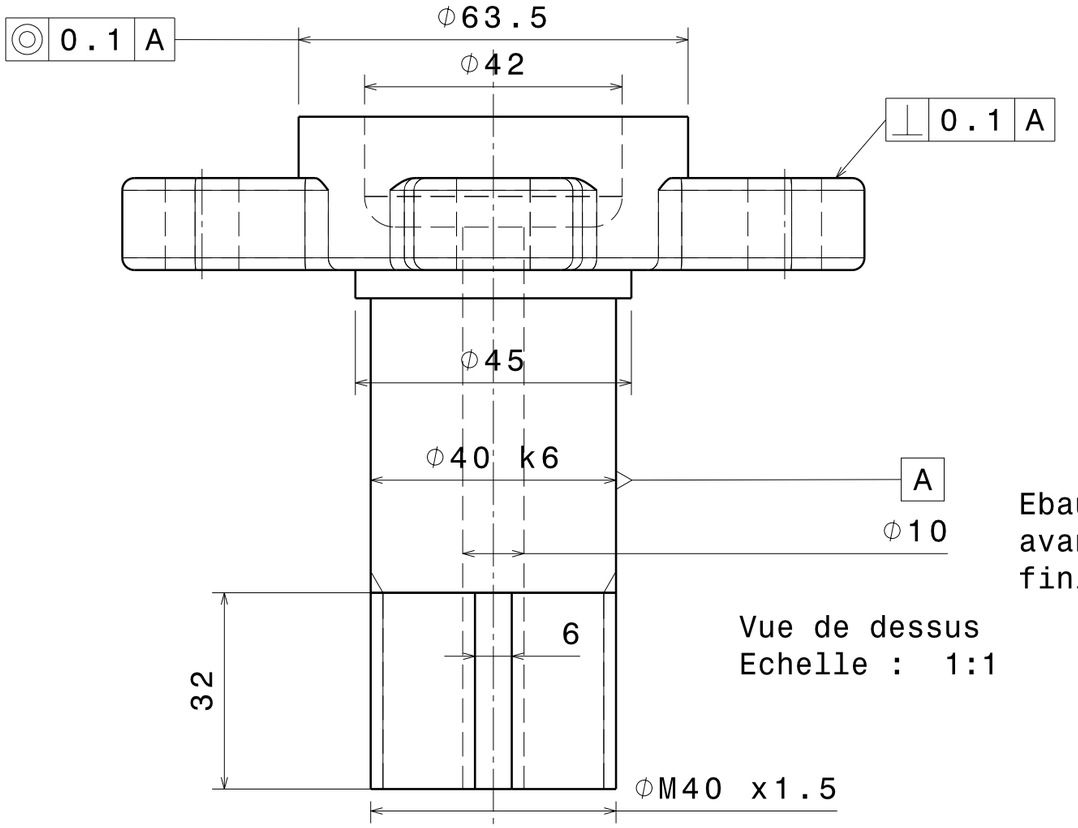

Vue de dessus
Echelle : 1:1

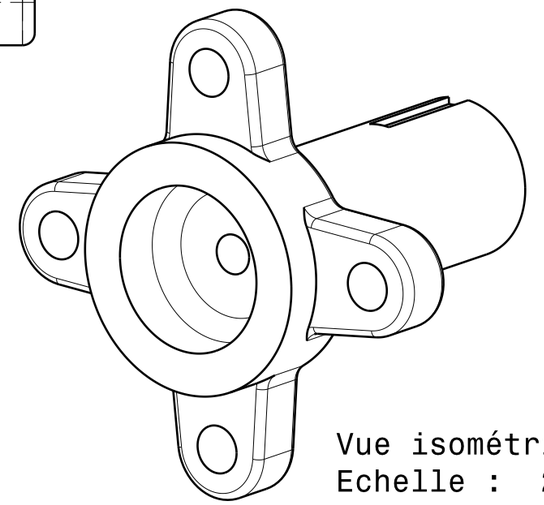

Vue isométrique
Echelle : 2:3

Taille Brut :
diam121x98.6
Tolérances Générales :
ISO 2768 mK

Ebauche
avant
finition

Taille A3		Ecurie Piston Sport Auto
Dessiné par Damien Turlay	Date 13/01/2015	Désignation Moyeu ArG
Coordonnées damien.turlay@ecl13.ec-lyon.fr 06 01 95 85 51	Quantité 2	Matériau Aluminium 7075 / Version 1
Plan vérifié par TDN, LBD et JGR	Echelle 1:1	Numéro du plan 15-B-053 / Feuille 1/1

514

University	Ecole Centrale de Lyon			**Car #**	81	**Part Cost**	$ 122,59
System	Wheels and tires	**FileLink1**				**Qty**	2
Assembly	Rear Hubs	**FileLink2**		**FileLink1**			
Part	Bearings	**FileLink3**		**FileLink2**		**Extended Cost**	$ 245,18
P/N Base	WT 03002			**FileLink3**			
Suffix	AA						
Details	FAG Bearings						

ItemOrder	Material	Use	UnitCost	Size1	Unit1	Size2	Unit2	Area Name	Area	Length	Density	Quantity	Sub Total
10	Wheel Bearing, Ball, Angular Contact	Wheel Bearings	$ 122,59	85,00	mm	13	mm					1	$ 122,59
												Sub Total	**$ 122,59**

University	Ecole Centrale de Lyon			**Car #**	81	**Part Cost**	$ 34,27
System	Wheels and Tires	**FileLink1**				**Qty**	1
Assembly	Rear Hubs	**FileLink2**		**FileLink1**			
Part	Rear spacer	**FileLink3**		**FileLink2**		**Extended Cost**	$ 34,27
P/N Base	WT 03003			**FileLink3**			
Suffix	AA						
Details							

ItemOrder	Material	Use	UnitCost	Size1	Unit1	Size2	Unit2	Area Name	Area	Length	Density	Quantity	Sub Total
10	Aluminium, Normal	Stock material for part	$ 4,20	60	mm			circle area	1,13E-02	0,064	2 710	1,00	$ 8,23
												Sub Total	**$ 8,23**

ItemOrder	Process	Use	UnitCost	Unit	Quantity	Multiplier	Mult. Val.	Sub Total
10	Machining Setup, Install and remove		$ 1,30	unit	1			$ 1,30
20	Machining	Half external shape and central hole	$ 0,04	cm^3	151	Material - Aluminium	1	$ 6,04
30	Machining Setup, Change		$ 0,65	unit	1			$ 0,65
40	Machning	Second Half external shape and central hole	$ 0,04	cm^3	151	Material - Aluminium	1	$ 6,04
50	Machining Setup, Change		$ 0,65	unit	1			$ 0,65
60	Machning	Radial weigth reduction	$ 0,04	cm^3	182	Material - Aluminium	1	$ 7,28
70	Machining Setup, Change		$ 0,65	unit	1			$ 0,65
80	Machning	Axial weight reduction and holes	$ 0,04	cm^3	86	Material - Aluminium	1	$ 3,43
							Sub Total	**$ 26,04**

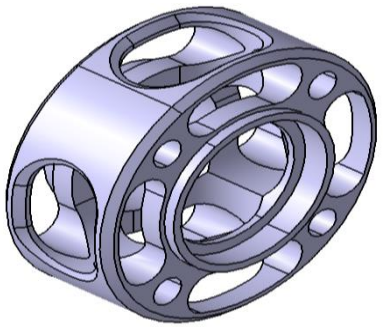

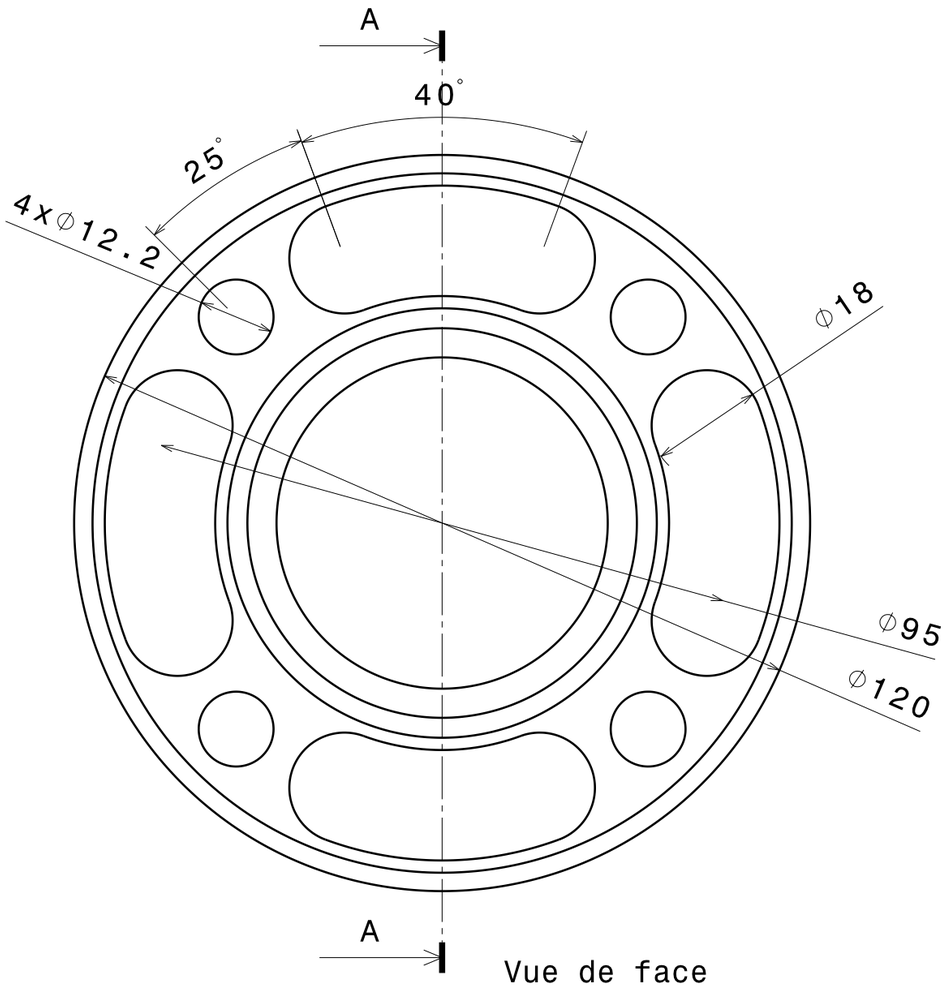

Vue de face

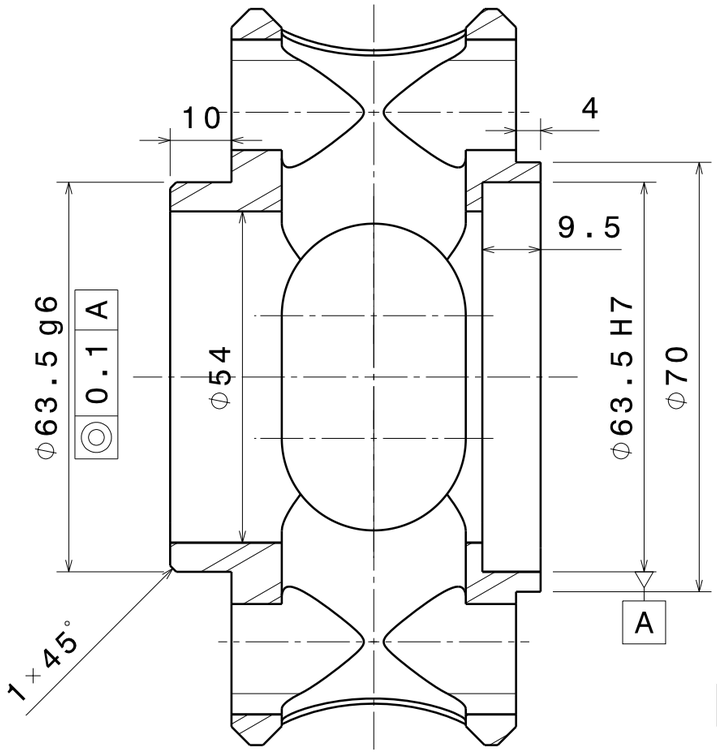

Coupe A-A

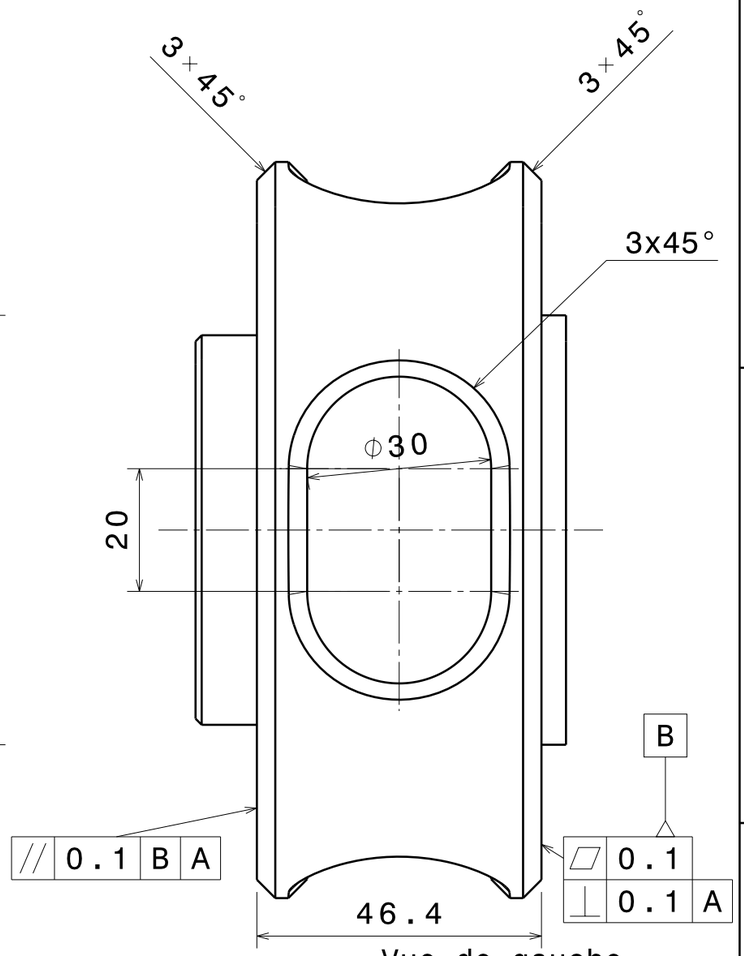

Vue de gauche

Tolérances Générales ISO 2768 - mK

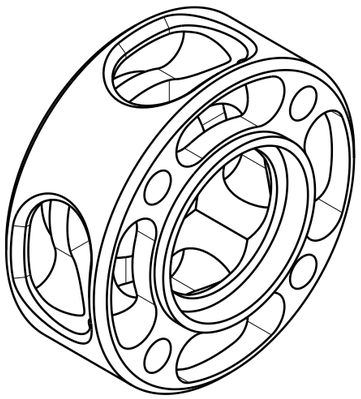

Vue isométrique
Echelle : 1:2

517

Taille A3		Ecurie Piston Sport Auto	
Dessiné par Luc	Date 04/02/2015	Désignation Elargisseur de voie arrière	
Coordonnées lbrossar@ec-lyon.fr 06.59.15.53.71		Quantité 2	Matériau Aluminium 2017	Version 0.9
Plan vérifié par CCN		Echelle 1:1	Numéro du plan 15-B-054	Feuille 1/1