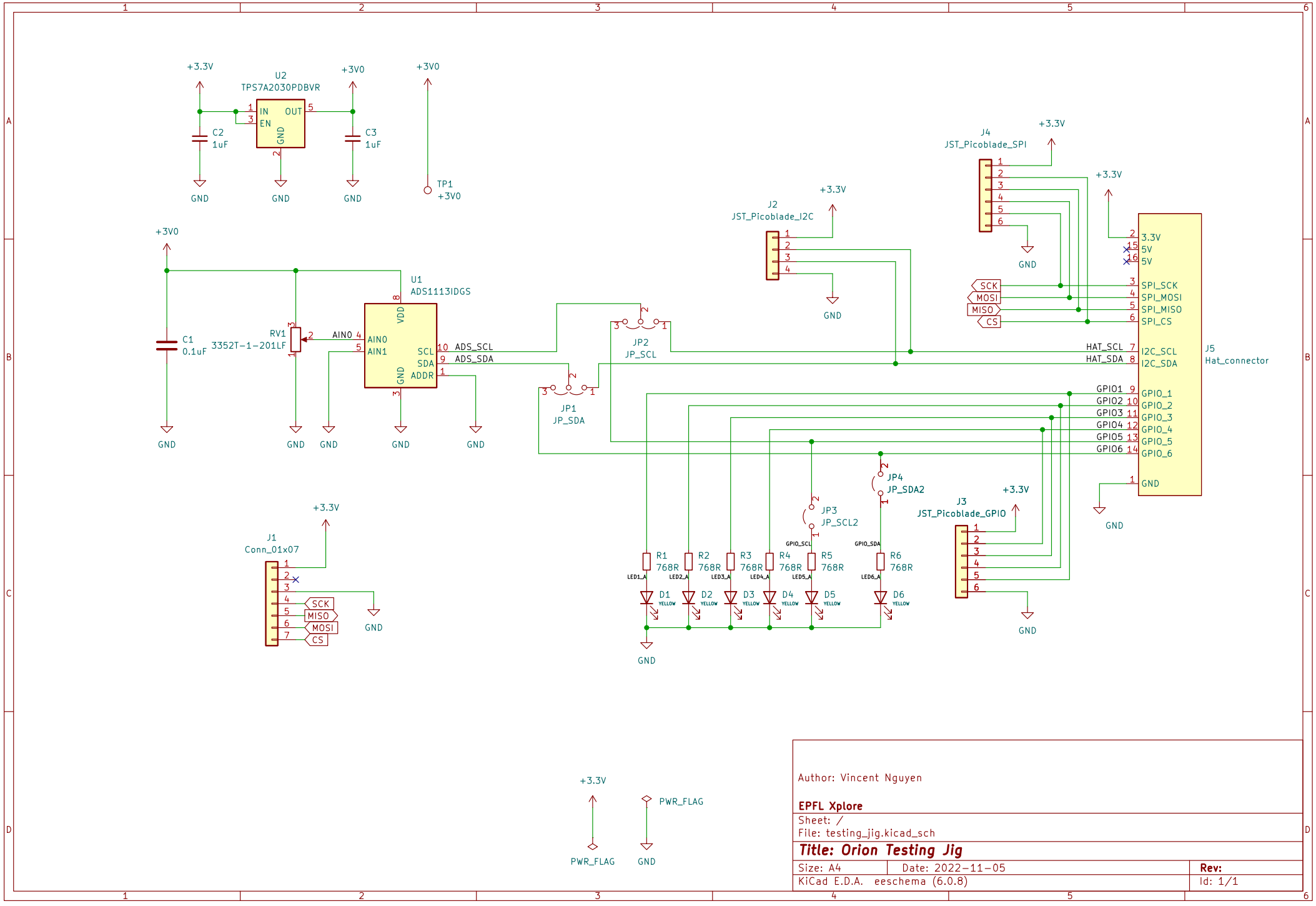

Author: Vincent Nguyen

EPFL Xplore

Sheet: /

File: testing_jig.kicad_sch

Title: Orion Testing Jig

Size: A4	Date: 2022-11-05	Rev:
KiCad E.D.A. eeschema (6.0.8)		Id: 1/1