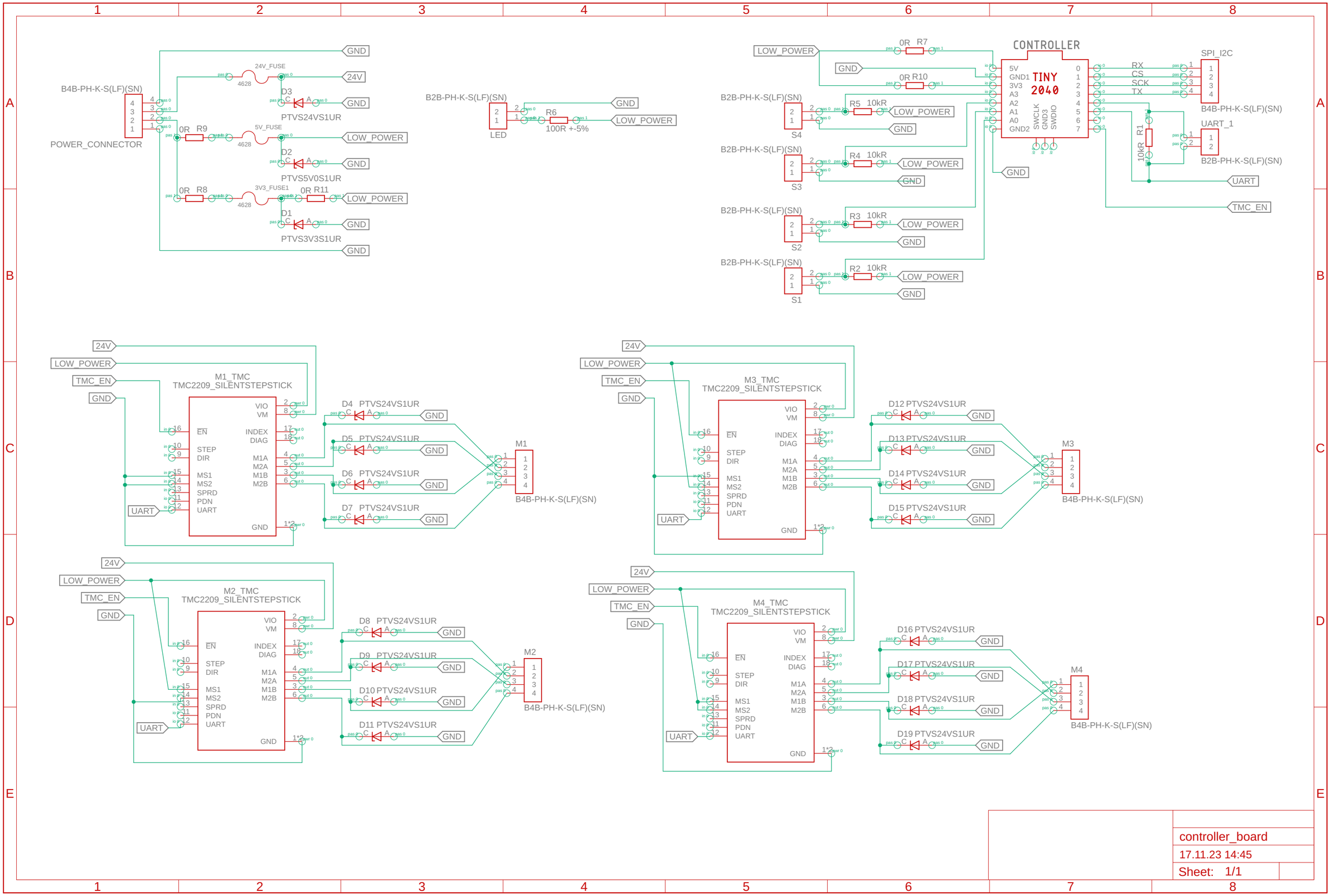
B4B-PH-K-S(LF)(SN)
POWER_CONNECTOR
24V_FUSE
4628
D3
PTVS24VS1UR
5V_FUSE
D2
PTVS5V0S1UR
3V3_FUSE1
D1
PTVS3V3S1UR
0R R9
0R R8
0R R11
GND
24V
LOW_POWER
B2B-PH-K-S(LF)(SN)
LED
R6
100R +-5%
CONTROLLER
TINY 2040
5V
GND1
3V3
A3
A2
A1
A0
GND2
SWCLK
GND3
SWDIO
RX
CS
SCK
TX
SPI_I2C
UART_1
UART
TMC_EN
0R R7
0R R10
R5 10kR
R4 10kR
R3 10kR
R2 10kR
S4
S3
S2
S1
R1 10kR
M1_TMC
TMC2209_SILENTSTEPSTICK
VIO
VM
EN
STEP
DIR
MS1
MS2
SPRD
PDN
UART
INDEX
DIAG
M1A
M2A
M1B
M2B
D4 PTVS24VS1UR
D5 PTVS24VS1UR
D6 PTVS24VS1UR
D7 PTVS24VS1UR
M1
M2_TMC
D8 PTVS24VS1UR
D9 PTVS24VS1UR
D10 PTVS24VS1UR
D11 PTVS24VS1UR
M2
M3_TMC
D12 PTVS24VS1UR
D13 PTVS24VS1UR
D14 PTVS24VS1UR
D15 PTVS24VS1UR
M3
M4_TMC
D16 PTVS24VS1UR
D17 PTVS24VS1UR
D18 PTVS24VS1UR
D19 PTVS24VS1UR
M4
controller_board
17.11.23 14:45
Sheet: 1/1