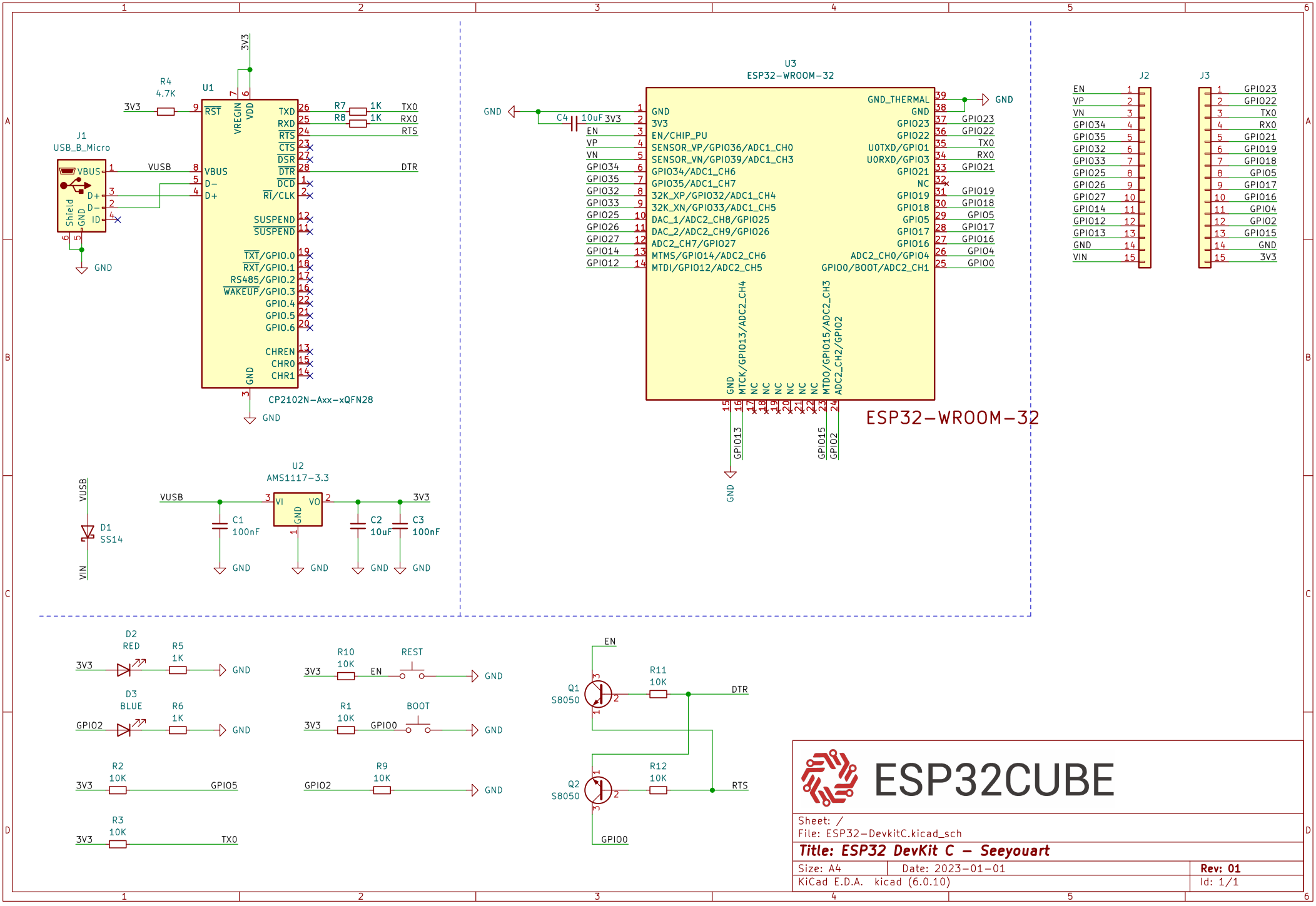
U1
CP2102N-Axx-xQFN28
J1
USB_B_Micro
U2
AMS1117-3.3
D1
SS14
U3
ESP32-WROOM-32
ESP32-WROOM-32
J2
J3
D2
RED
D3
BLUE
Q1
S8050
Q2
S8050
REST
BOOT
ESP32CUBE
Sheet: /
File: ESP32-DevkitC.kicad_sch
Title: ESP32 DevKit C - Seeyouart
Size: A4
Date: 2023-01-01
Rev: 01
KiCad E.D.A. kicad (6.0.10)
Id: 1/1