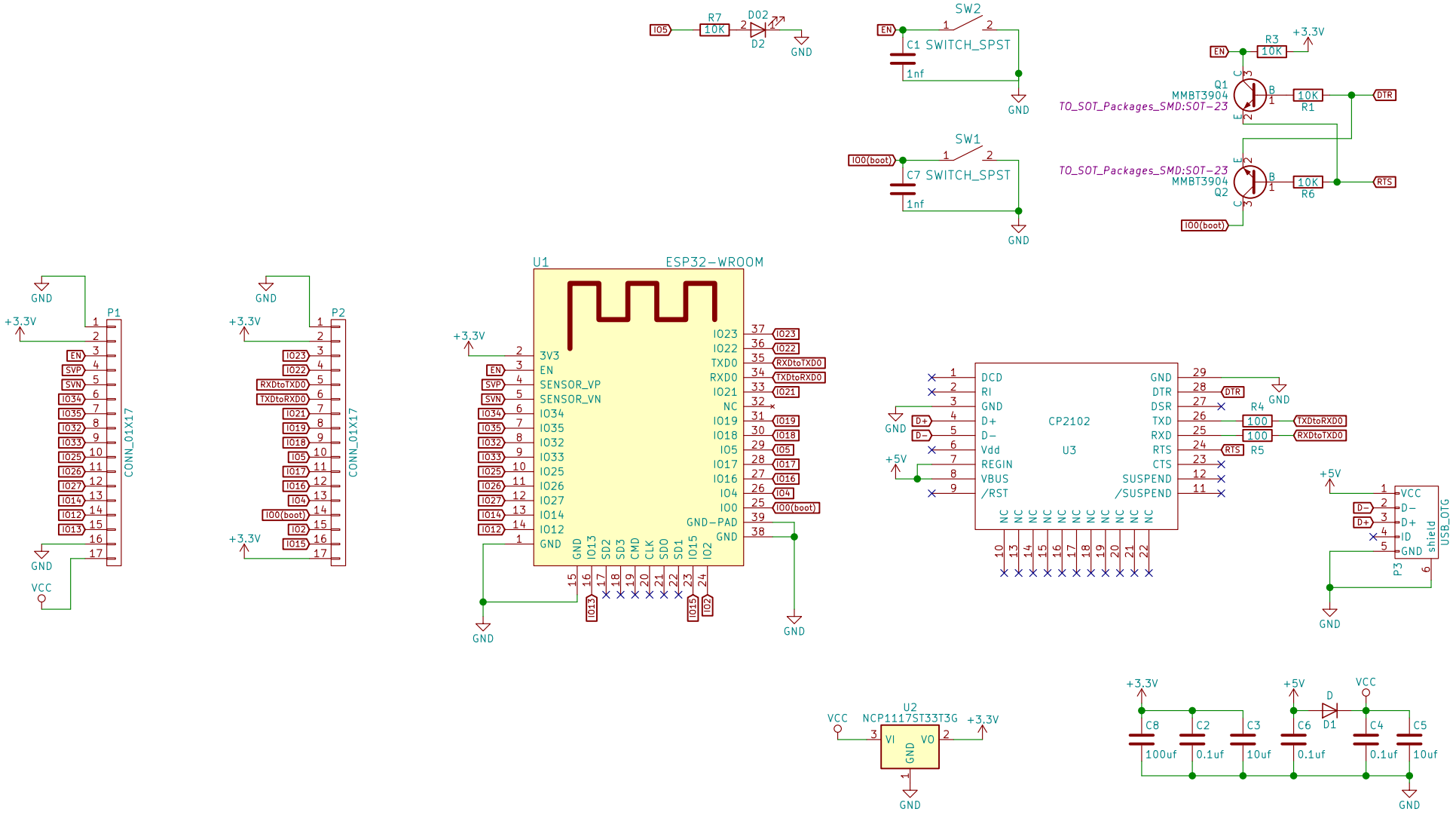

github.com/asukiaaa/esp32bb
by asukiaaa

Sheet: /
File: esp32bb.sch

Title: ESP32BB

Size: A4	Date: 2017-03-28	Rev: 2.1
KiCad E.D.A. kicad 4.0.6-e0-634952ubuntu16.10.1		Id: 1/1