ETHZurich

Logo ETH Zurich

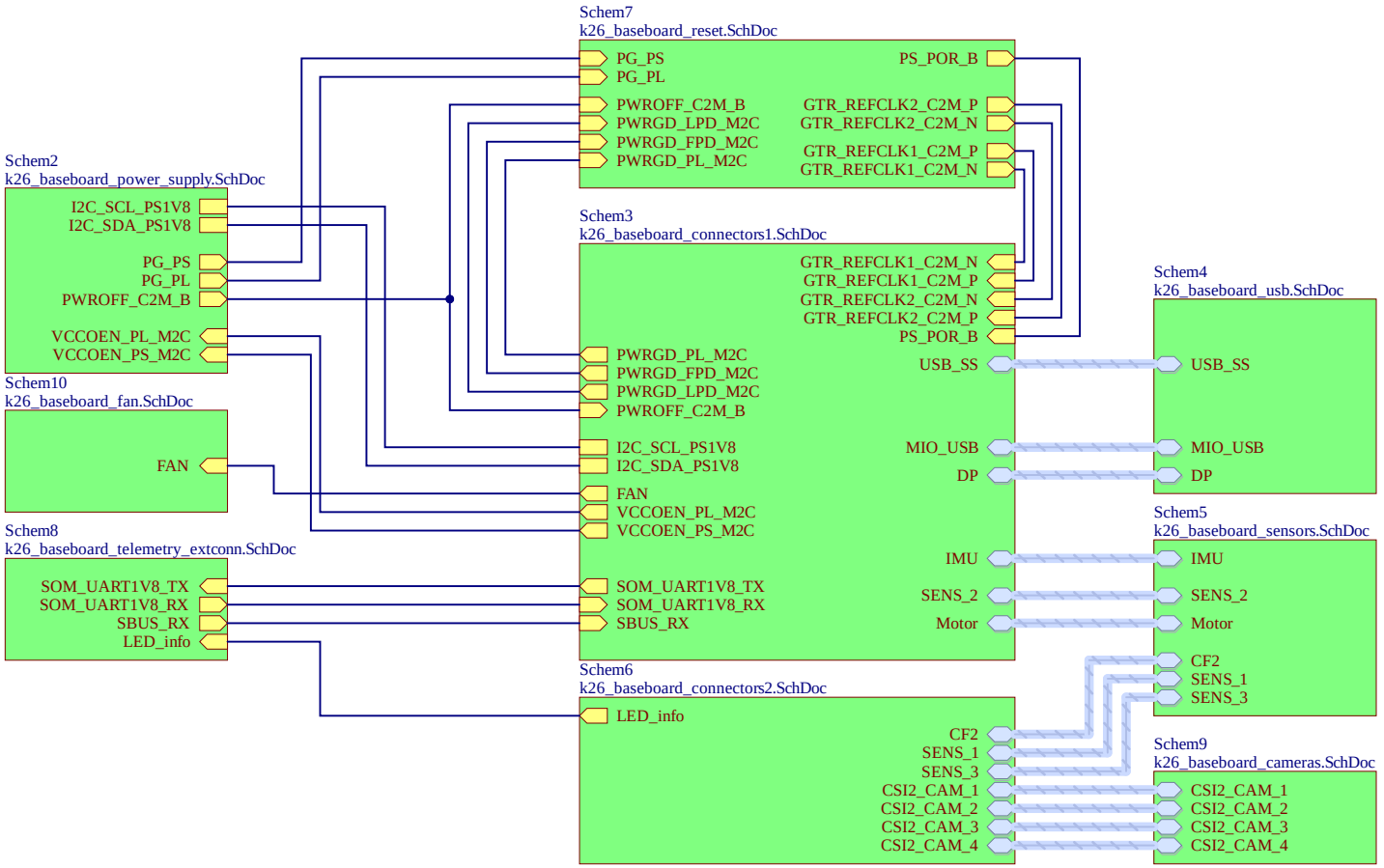

Eidgenössische Technische Hochschule Zürich
Swiss Federal Institute of Technology Zurich

Project: k26 Baseboard

Drawing number: 1	Rev: r5	Format: A4 Q	Laboratory: PBL	Sheet: k26_baseboard.SchDoc	
Date: 15.01.2024 13:29:56			Drawn by: Ch. Vogt	Page 1	of *

File: C:\Users\Christian\Documents\Projects\ETH_PROJ_k26_fpga_drone_baseboard\schematics\k26_baseboard.SchDoc

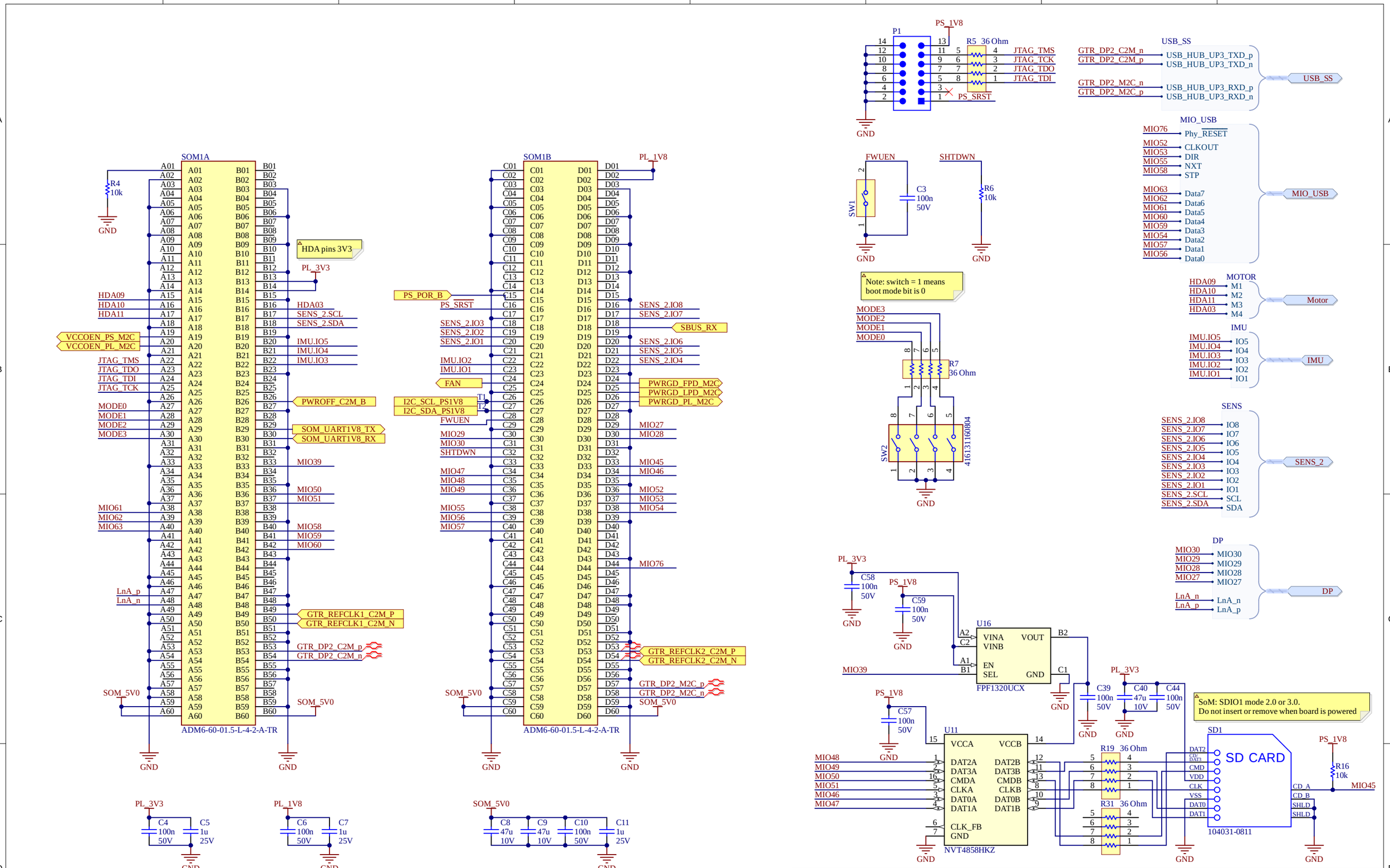

ETH

Eidgenössische Technische Hochschule Zürich
Swiss Federal Institute of Technology Zurich

Project: k26 Baseboard Connectors 1

Drawing number: 1	Rev: r5	Format: A3	Laboratory: PBL
Date: 15.01.2024 13:29:56			Drawn by: Ch. Vogt
Sheet: k26_baseboard_connectors1.S	Page 2 of *		

File: C:\Users\Christian\Documents\Projects\ETH_PROJ_k26_fpga_drone_baseboard\schematics\k26_baseboard_connectors1.SchDoc

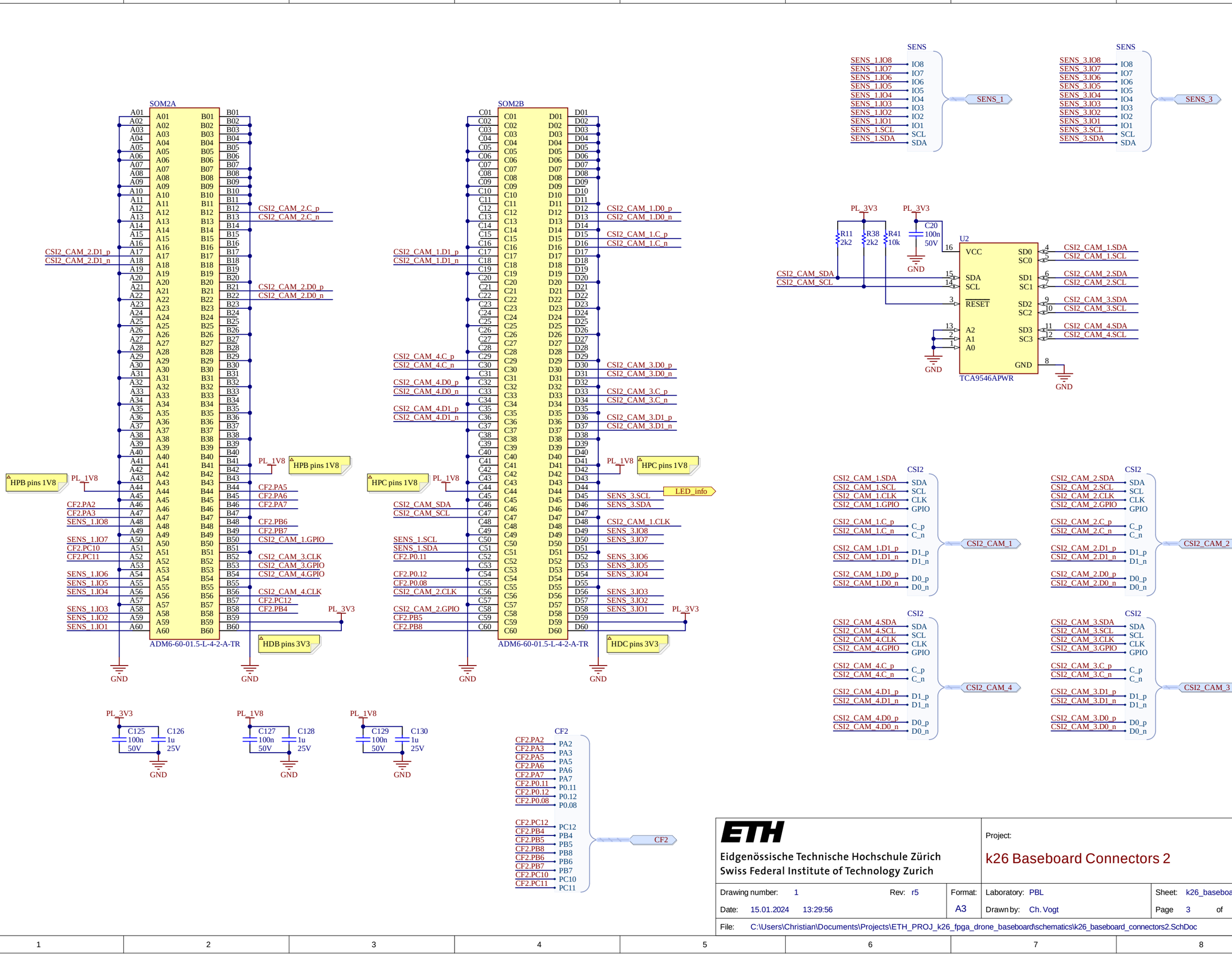

ETH Eidgenössische Technische Hochschule Zürich Swiss Federal Institute of Technology Zurich

Project: k26 Baseboard Connectors 2

Drawing number: 1	Rev: r5	Format: A3	Laboratory: PBL	Sheet: k26_baseboard_connectors2.S	
Date: 15.01.2024 13:29:56			Drawn by: Ch. Vogt	Page 3 of *	
File: C:\Users\Christian\Documents\Projects\ETH_PROJ_k26_fpga_drone_baseboard\schematics\k26_baseboard_connectors2.SchDoc					

Bat. in 10V-30V

Cin min 47u, below 10°C self heating
Voltage ripple in < 100mV

J2
436500200
C12 10u 50V
C13 10u 50V
C14 10u 50V
C15 10u 50V
C16 10u 50V
C17 10u 50V
C18 4u7 50V
C19 100n 50V
GND

J3
5V0_In
Debug Power Input
GND

U3
MAX20008AFOC/VY+
EN
SUPSW
SUP
FOSC
COMP
SYNC
GND
OUT
BST
LX
*RESET
BIAS
FB
PGND
R10 14kR
C22 100n 50V
L1 1u2
C25 22u 10V
C26 22u 10V
C27 22u 10V
C28 22u 10V
80uF for 0.2V drop when load changes by 4A
5V0_In
5VSOM 50mVpp ripple max.
PG_ALWAYS_ON
C29 2u2 10V
R12 25k5
C31 6p8
C32 680p

PS_1V8
C2 100n 50V
U1
PCA9617ATP
VCC(A)
SDAA
SCLA
EN
VCC(B)
SDAB
SCLB
EP
GND
I2C_SDA_PS1V8
I2C_SCL_PS1V8
C33 100n 50V
R2 10k
R3 10k
5V0_In
10k to keep max. open drain current limit
U4
INA3221AIRGVR
SCL
SDA
A0
CRITICAL
WARNING
TC
PV
VPU
VS
IN1+
IN1-
IN2+
IN2-
IN3+
IN3-
EP
GND
SOM+
SOM-
PS+
PS-
PL+
PL-
C30 100n 50V

PS_5V0
C49 10u 50V
C50 10u 50V
VCCOEN_PS_M2C
PG_PS
U10
MPM3632CGQV-P
VIN
EN
VCC
PG
AGND
SW
BST
OUT
OUT_SENSE
FB
PGND
R27 1k
R24 47k
R30 37k4
C55 22u 10V
C56 22u 10V
PS_1V8
J9

PS_5V0
C35 10u 50V
C36 10u 50V
VCCOEN_PS_M2C
PG_PS
U6
MPM3632CGQV-P
R17 1k
R14 47k
R20 15k
C41 22u 10V
C42 22u 10V
PS_3V3
J5

R1 2mR
R97 tbd
R98 tdb
C37 100n 50V
5V0_In
SOM_5V0
SOM-
SOM+

R15 2mR
R99 tbd
R100 tdb
C38 100n 50V
5V0_In
PS_5V0
PS-
PS+

R18 2mR
R101 tbd
R102 tdb
C43 100n 50V
5V0_In
PL_5V0
PL-
PL+

PL_5V0
C45 10u 50V
C46 10u 50V
VCCOEN_PL_M2C
PG_PL
U8
MPM3632CGQV-P
R25 1k
R22 47k
R28 37k4
C51 22u 10V
C52 22u 10V
PL_1V8
J7

PL_5V0
C47 10u 50V
C48 10u 50V
VCCOEN_PL_M2C
PG_PL
U9
MPM3632CGQV-P
R26 1k
R23 47k
R29 15k
C53 22u 10V
C54 22u 10V
PL_3V3
J8

5V0_In
R21 10k
R62 10k
PG_PS
PG_PL
PWROFF_C2M_B
PG_ALWAYS_ON
T5
T6
T8

T7 VCCOEN_PS_M2C
T9 VCCOEN_PL_M2C

MPM3632: Add additional snubber as per recommendation of datasheet for EMI?
--> see for Rev. 2

ETH
Eidgenössische Technische Hochschule Zürich
Swiss Federal Institute of Technology Zurich

Project:
k26 Baseboard Power Supply

Drawing number:	1	Rev: r5	Format:	Laboratory: PBL	Sheet: k26_baseboard_power_supply
Date:	15.01.2024	13:29:56	A3	Drawn by: Ch. Vogt	Page 4 of *
File:	C:\Users\Christian\Documents\Projects\ETH_PROJ_k26_fpga_drone_baseboard\schematics\k26_baseboard_power_supply.SchDoc				

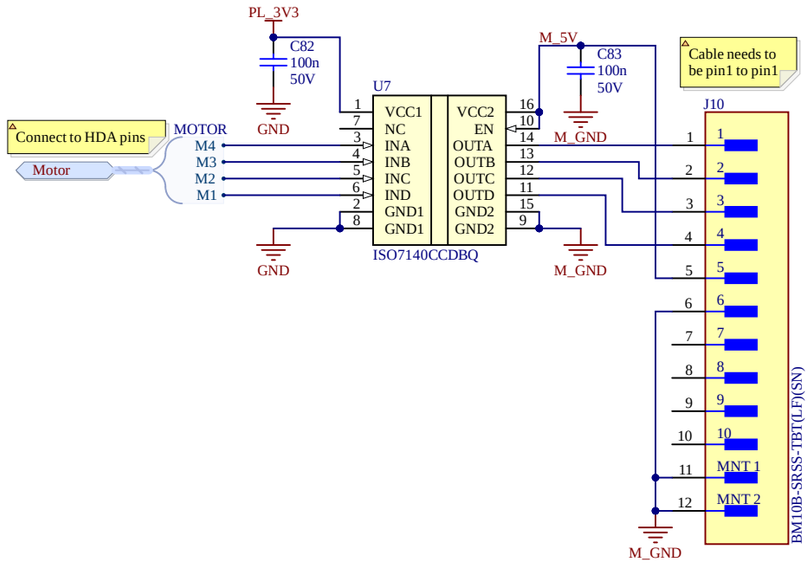

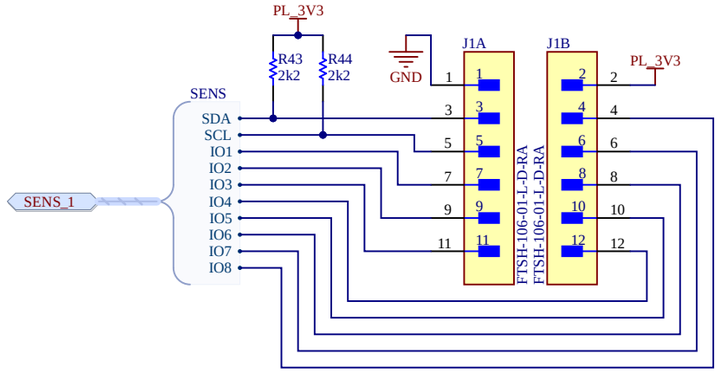

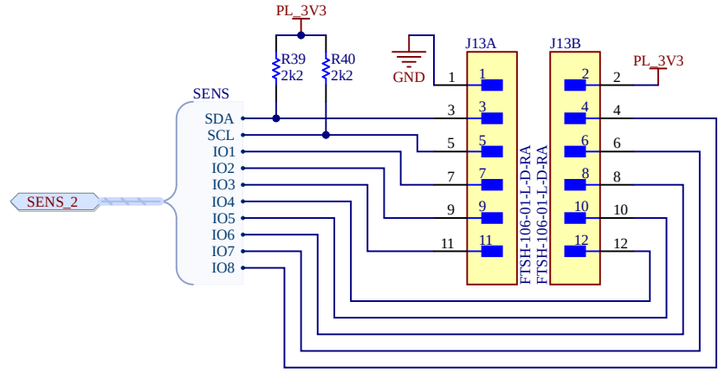

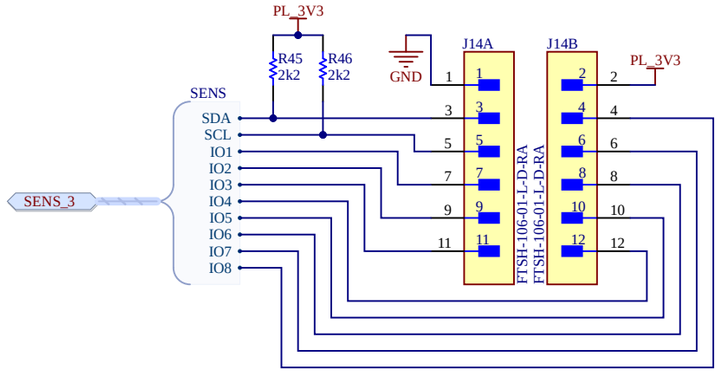

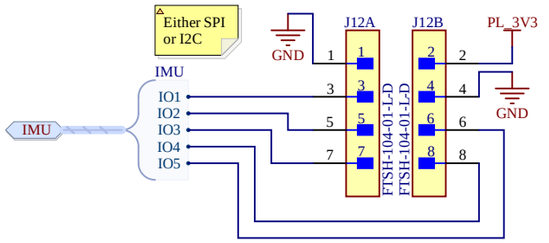

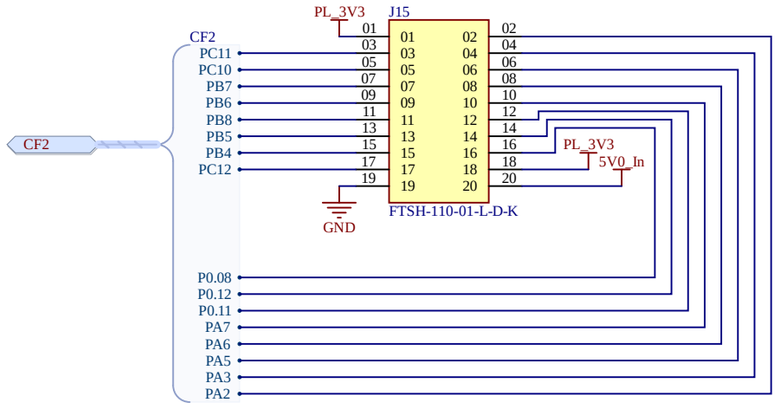

Eidgenössische Technische Hochschule Zürich Swiss Federal Institute of Technology Zurich			Project: k26 Baseboard Sensors / Motordriver
Drawing number: 1 Rev: r5 Date: 15.01.2024 13:29:56	Format: A3	Laboratory: PBL Drawn by: Ch. Vogt	Sheet: k26_baseboard_sensors.SchD Page 5 of *
File: C:\Users\Christian\Documents\Projects\ETH_PROJ_k26_fpga_drone_baseboard\schematics\k26_baseboard_sensors.SchDoc			

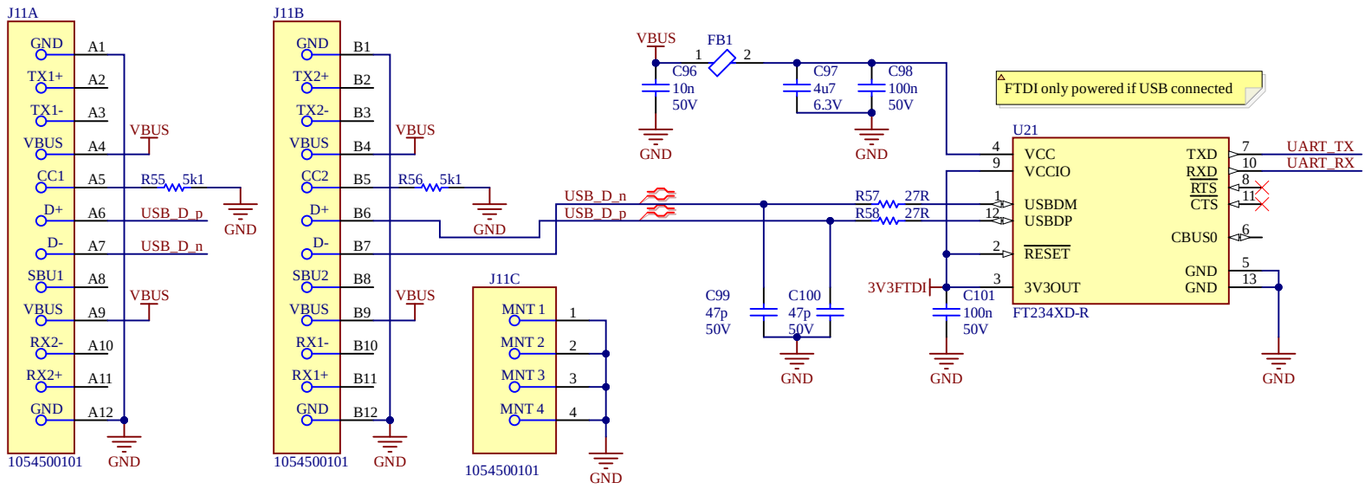

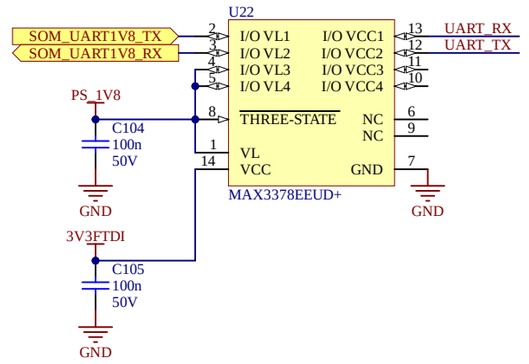

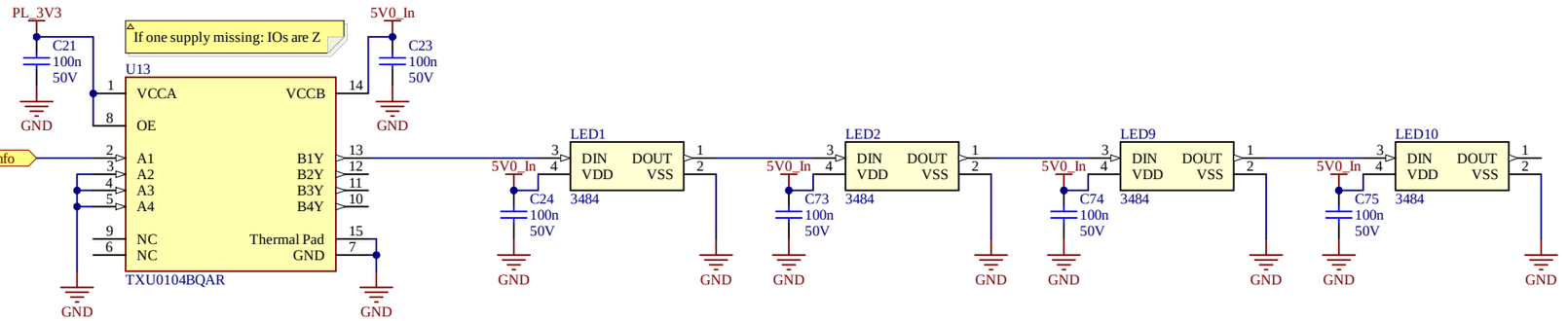

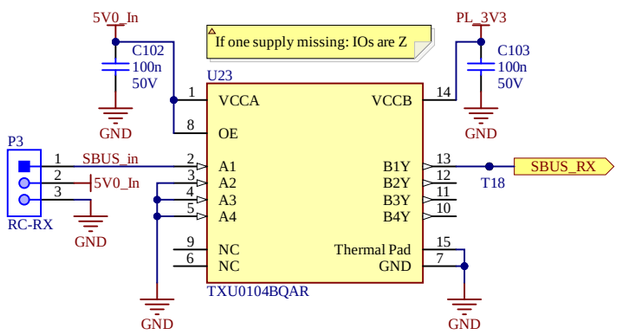

ETH Eidgenössische Technische Hochschule Zürich Swiss Federal Institute of Technology Zurich			Project: k26 Baseboard Telemetry/Ext. Connectors	
Drawing number: 1	Rev: r5	Format:	Laboratory: PBL	Sheet: k26_baseboard_telemetry_ext
Date: 15.01.2024 13:29:56		A3	Drawn by: Ch. Vogt	Page 6 of *
File: C:\Users\Christian\Documents\Projects\ETH_PROJ_k26_fpga_drone_baseboard\schematics\k26_baseboard_telemetry_extconn.SchDoc				

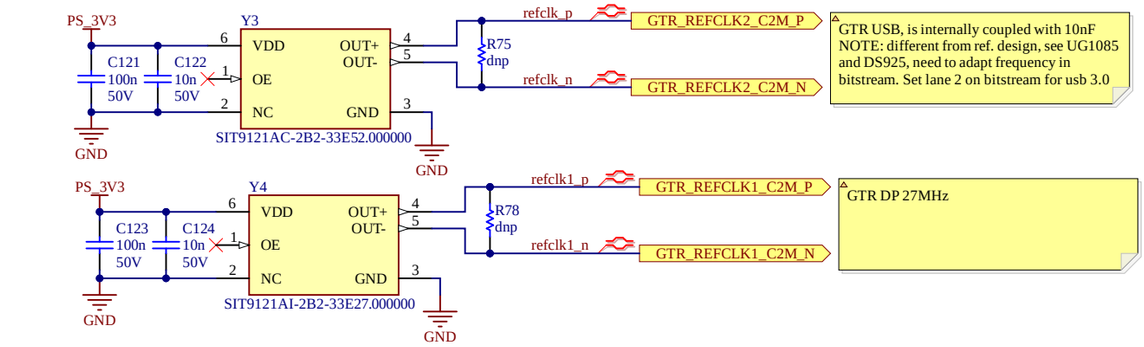

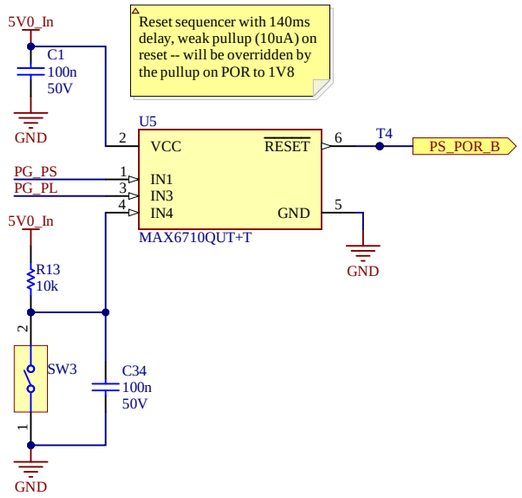

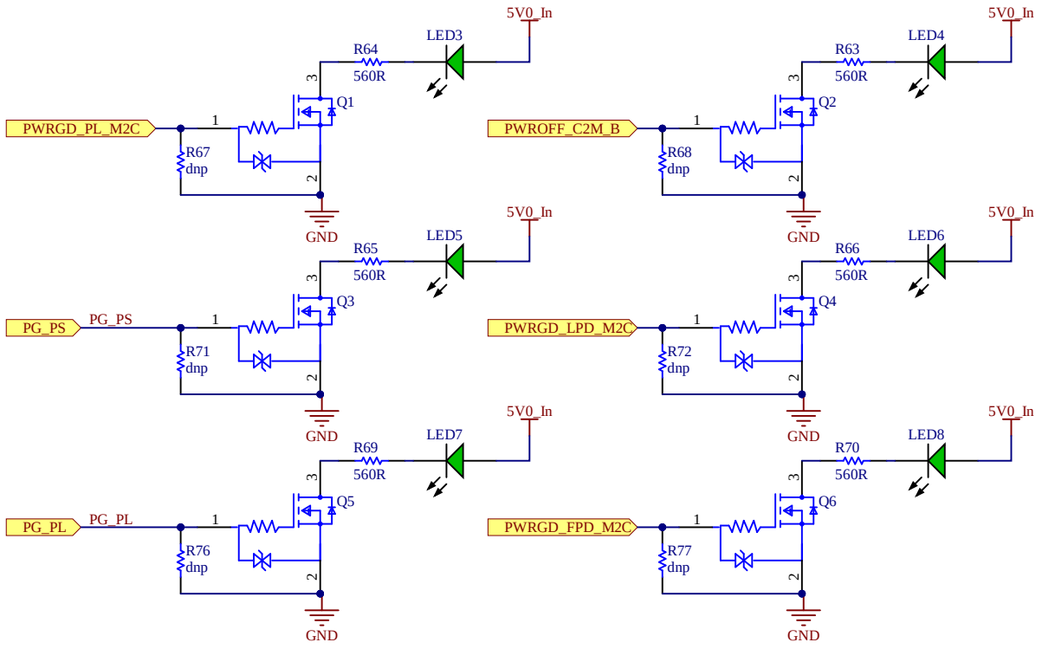

Eidgenössische Technische Hochschule Zürich Swiss Federal Institute of Technology Zurich			Project: k26 Baseboard Reset / Oscillators	
Drawing number: 1	Rev: r5	Format: A3	Laboratory: PBL	Sheet: k26_baseboard_reset.SchDoc
Date: 15.01.2024 13:29:56			Drawn by: Ch. Vogt	Page 7 of *
File: C:\Users\Christian\Documents\Projects\ETH_PROJ_k26_fpga_drone_baseboard\schematics\k26_baseboard_reset.SchDoc				

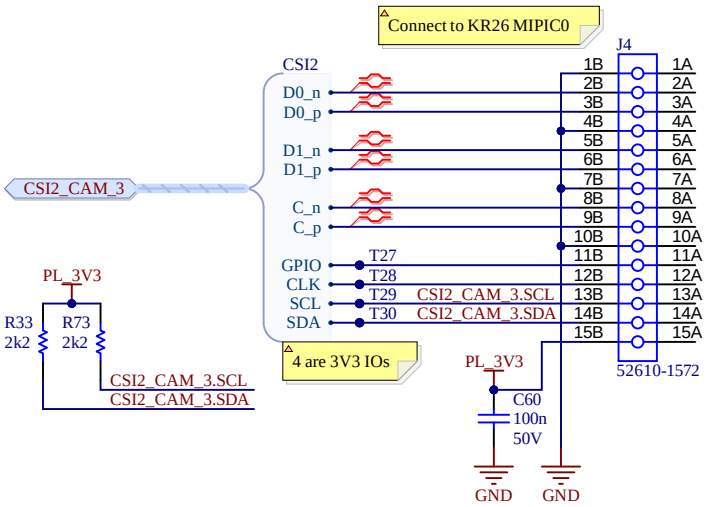

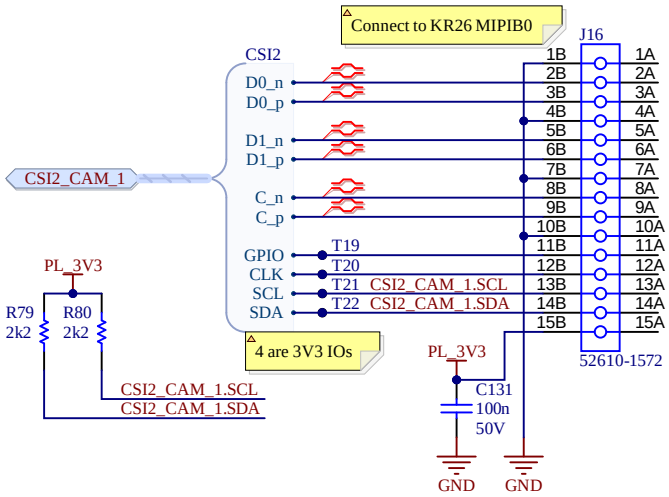

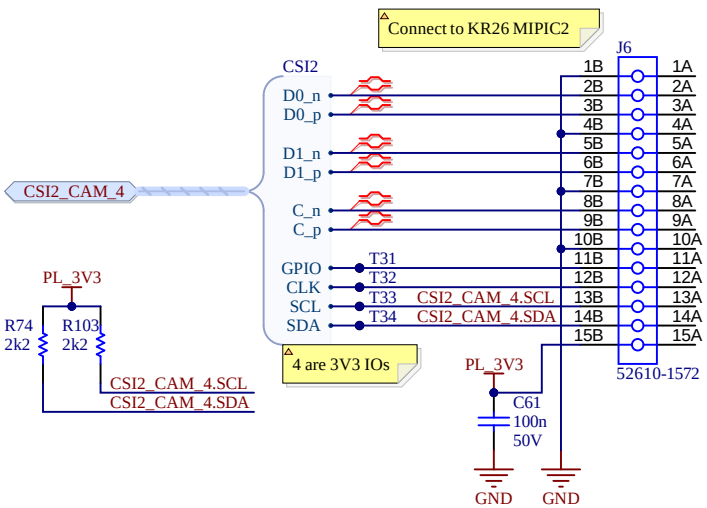

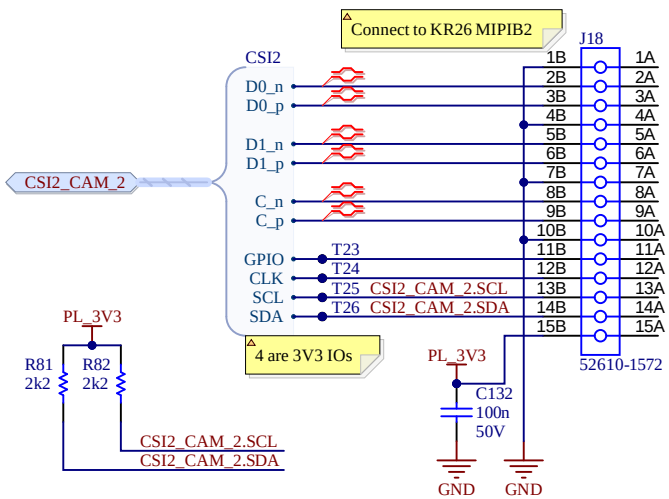

Eidgenössische Technische Hochschule Zürich
Swiss Federal Institute of Technology Zurich

Project: k26 Baseboard Cameras

Drawing number: 1	Rev: r5	Format: A4 Q	Laboratory: PBL	Sheet: k26_baseboard_cameras.SchDoc	
Date: 15.01.2024 13:29:56			Drawn by: Ch. Vogt	Page 8	of *

File: C:\Users\Christian\Documents\Projects\ETH_PROJ_k26_fpga_drone_baseboard\schematics\k26_baseboard_cameras.SchDoc

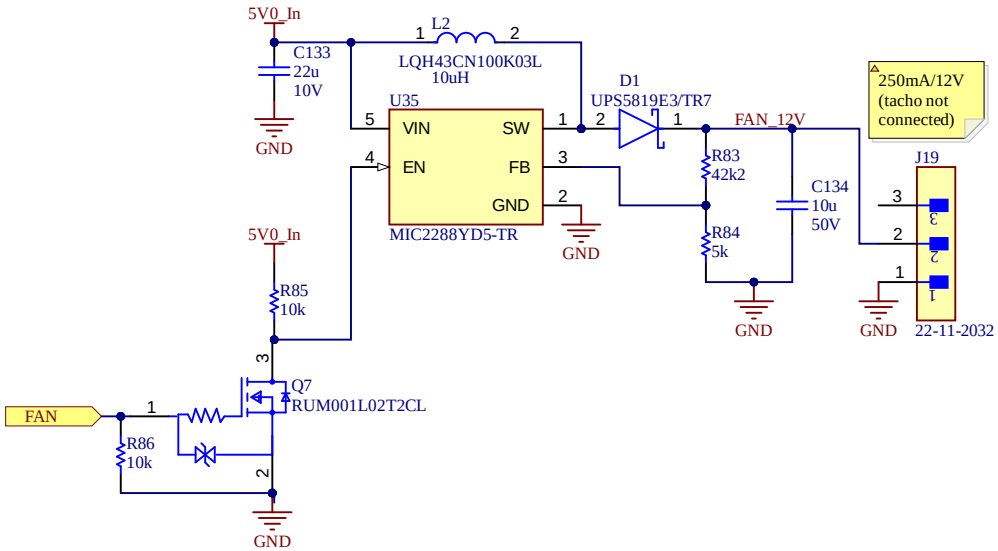

ETH Eidgenössische Technische Hochschule Zürich Swiss Federal Institute of Technology Zurich	Project: k26 Baseboard Fan			
Drawing number: 1 Rev: r5 Date: 15.01.2024 13:29:57	Format: A4 Q	Laboratory: PBL Drawn by: Ch. Vogt	Sheet: k26_baseboard_fan.SchDoc Page 9 of *	
File: C:\Users\Christian\Documents\Projects\ETH_PROJ_k26_fpga_drone_baseboard\schematics\k26_baseboard_fan.SchDoc				

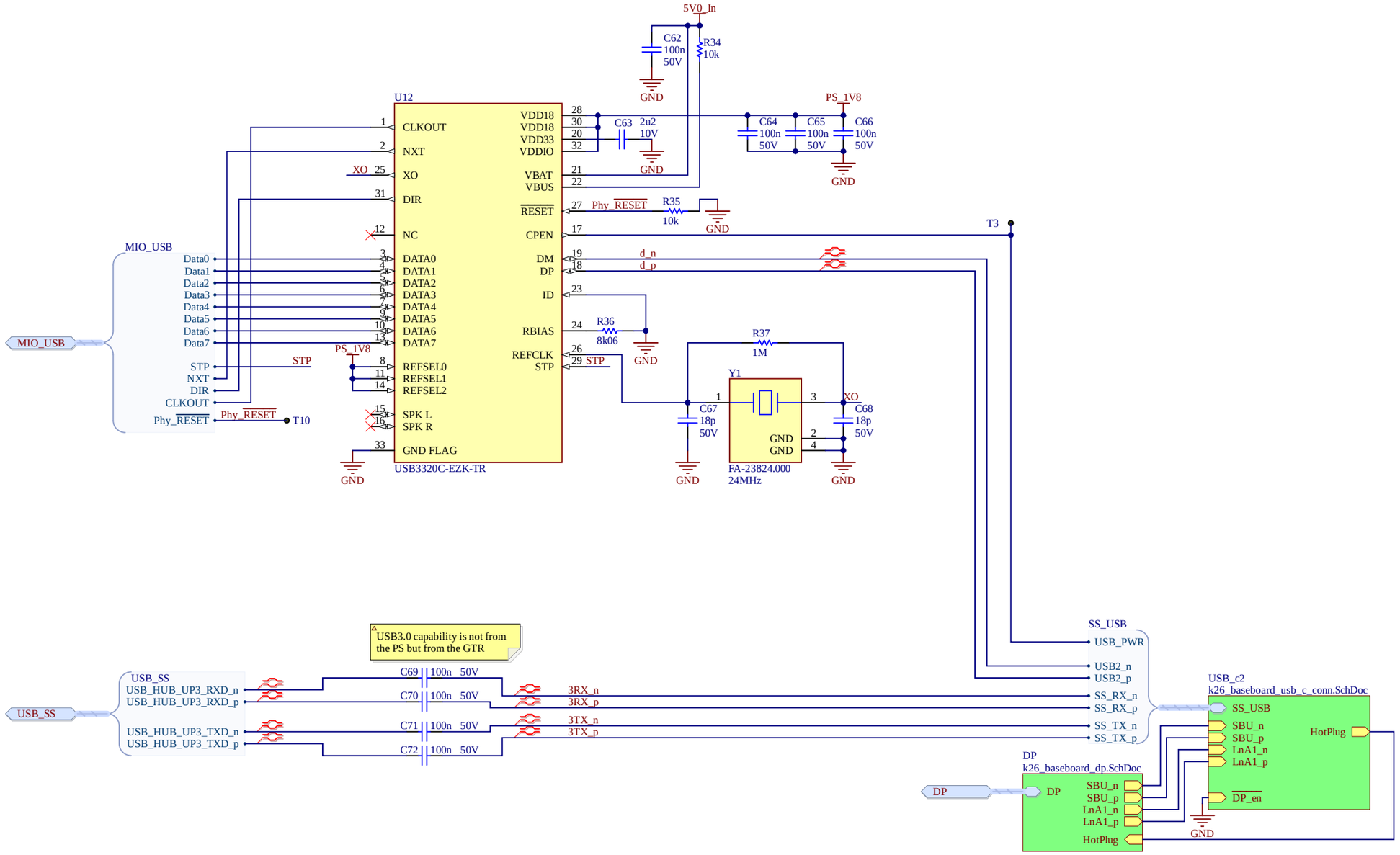

Eidgenössische Technische Hochschule Zürich Swiss Federal Institute of Technology Zurich			Project: k26 Baseboard USB0 PHY and HUB
Drawing number: 1	Rev: r5	Format: A3	Laboratory: PBL
Date: 15.01.2024 13:29:57			Drawn by: Ch. Vogt
Sheet: k26_baseboard_usb.SchDoc	Page 10 of *		
File: C:\Users\Christian\Documents\Projects\ETH_PROJ_k26_fpga_drone_baseboard\schematics\k26_baseboard_usb.SchDoc			

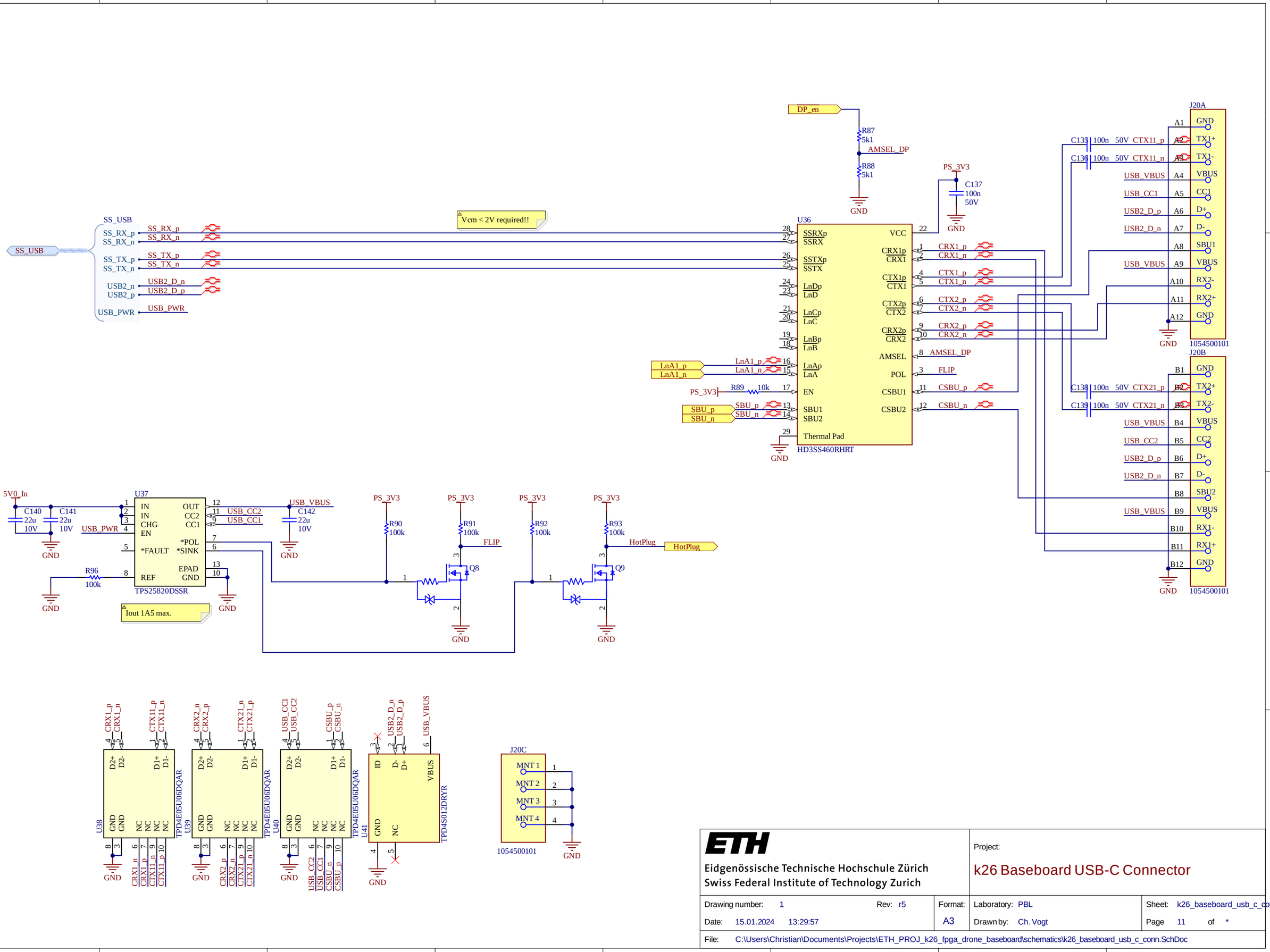

Eidgenössische Technische Hochschule Zürich Swiss Federal Institute of Technology Zurich			Project: k26 Baseboard USB-C Connector
Drawing number: 1	Rev: r5	Format: A3	Laboratory: PBL	Sheet: k26_baseboard_usb_c_conn.S
Date: 15.01.2024 13:29:57			Drawn by: Ch. Vogt	Page 11 of *
File: C:\Users\Christian\Documents\Projects\ETH_PROJ_k26_fpga_drone_baseboard\schematics\k26_baseboard_usb_c_conn.SchDoc				

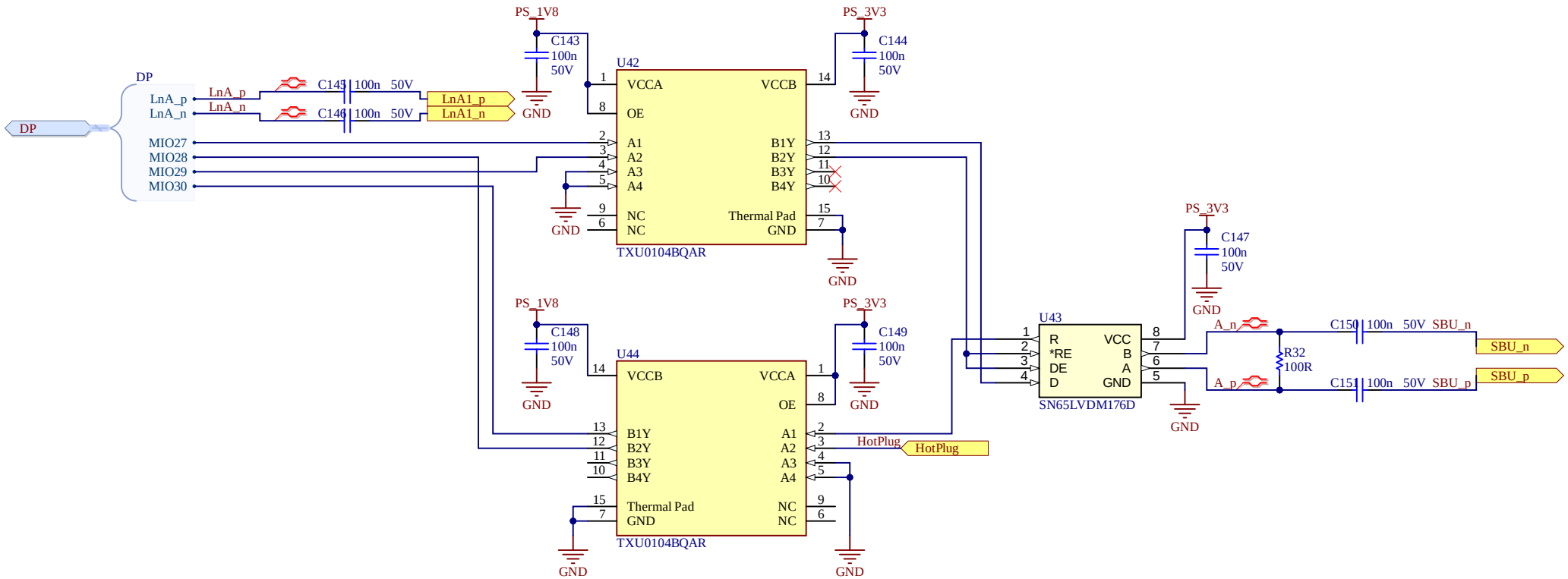

Eidgenössische Technische Hochschule Zürich Swiss Federal Institute of Technology Zurich	Project: k26 Baseboard Displayport			
Drawing number: 1 Rev: r5	Format: A4 Q	Laboratory: PBL	Sheet: k26_baseboard_dp.SchDoc	
Date: 15.01.2024 13:29:57		Drawn by: Ch. Vogt	Page 12 of *	
File: C:\Users\Christian\Documents\Projects\ETH_PROJ_k26_fpga_drone_baseboard\schematics\k26_baseboard_dp.SchDoc				

Top Layer (Scale 1:1)

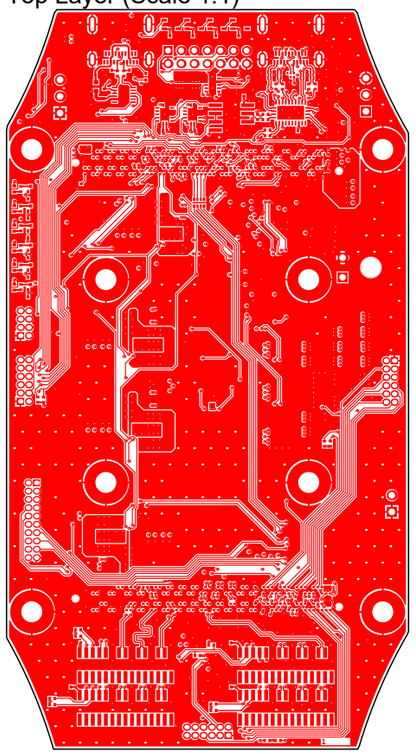

Bottom Layer (Scale 1:1)

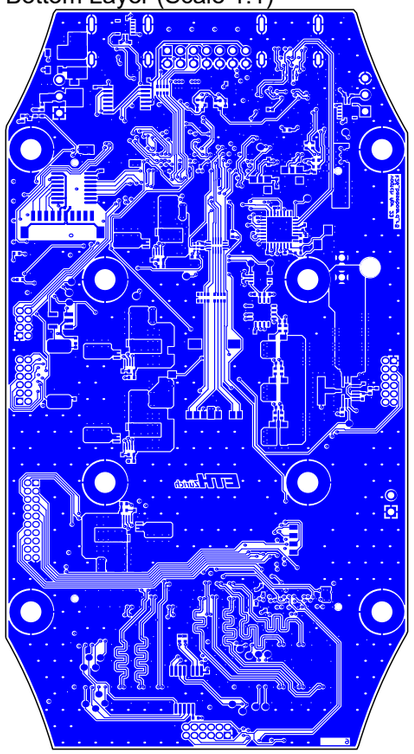

Int1 (GND) (Scale 1:1)

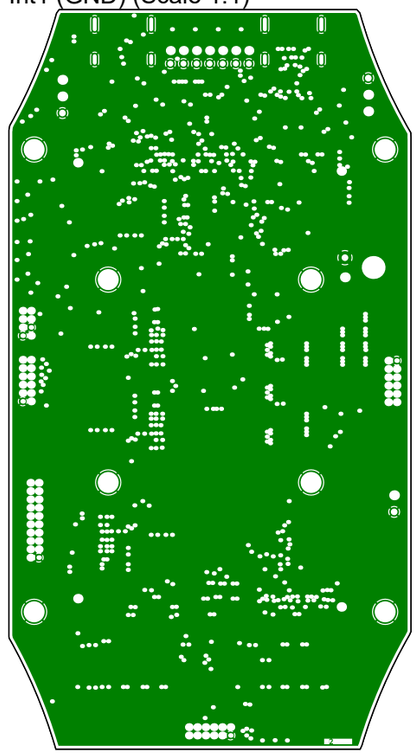

Int2 (Sign) (Scale 1:1)

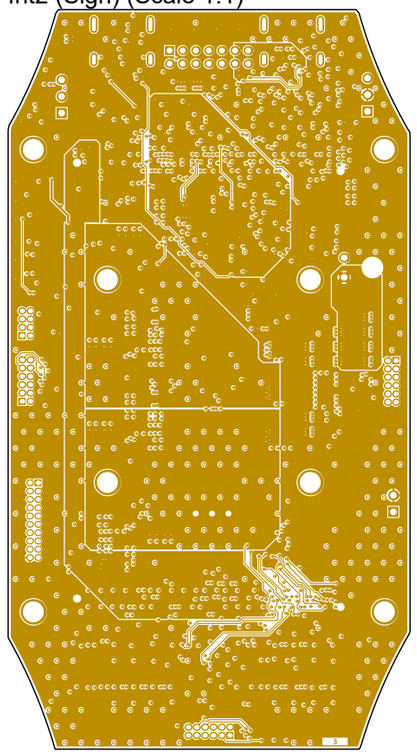

Int3 (Sign) (Scale 1:1)

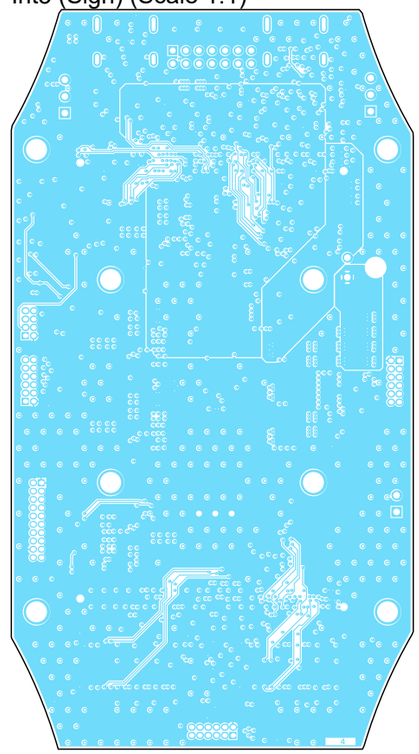

Layer Stack Legend

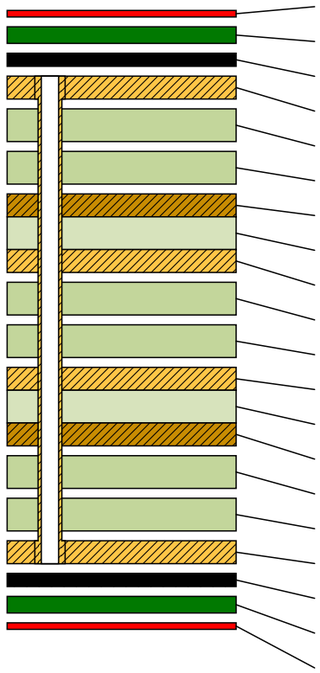

Material	Layer	Thickness	Dielectric Material	Type	Gerber
	Top Overlay			Legend	GTO
Surface Material	Top Solder	0.03mm	SM-001	Solder Mask	GTS
PbSn	Top Surface Finish	0.02mm		Surface Finish	
CF-004	**Top Layer**	**0.04mm**		**Signal**	**GTL**
Prepreg		*0.07mm*	*PP-006*	*Dielectric*	
Prepreg		*0.07mm*	*PP-006*	*Dielectric*	
CF-004	**Int1 (GND)**	**0.04mm**		**Internal Plane**	**GP1**
Core		*0.46mm*	*Core-035*	*Dielectric*	
CF-004	**Int2 (Sign)**	**0.04mm**		**Signal**	**G1**
Prepreg		*0.07mm*	*PP-006*	*Dielectric*	
Prepreg		*0.07mm*	*PP-006*	*Dielectric*	
CF-004	**Int3 (Sign)**	**0.04mm**		**Signal**	**G2**
Core		*0.46mm*	*Core-035*	*Dielectric*	
CF-004	**Int4 (GND)**	**0.04mm**		**Internal Plane**	**GP2**
Prepreg		*0.07mm*	*PP-006*	*Dielectric*	
Prepreg		*0.07mm*	*PP-006*	*Dielectric*	
CF-004	**Bottom Layer**	**0.04mm**		**Signal**	**GBL**
PbSn	Bottom Surface Finish	0.02mm		Surface Finish	
Surface Material	Bottom Solder	0.03mm	SM-001	Solder Mask	GBS
	Bottom Overlay			Legend	GBO

Total thickness: 1.64mm

Int4 (GND) (Scale 1:1)

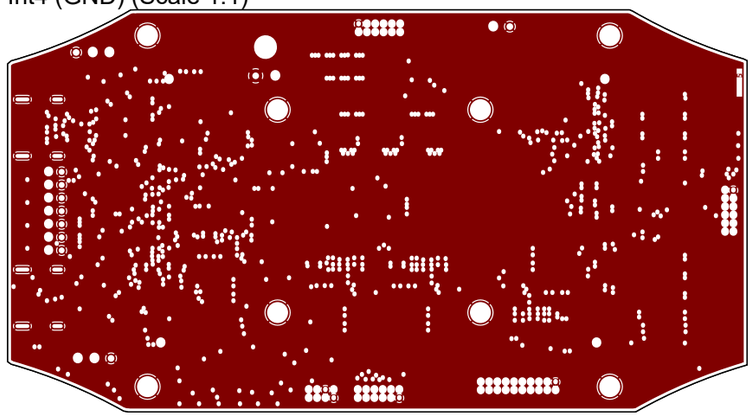

ETH

Eidgenössische Technische Hochschule Zürich
Swiss Federal Institute of Technology Zurich

Project:

k26 Baseboard Layout

Drawing number: 1 Rev: r2	Format: A3	LaboratoryPBL	Sheet: k26_baseboard_layout.PC
Date: 15.01.2024 13:30		Drawn by: Ch. Vogt	Page * of *
File: C:\Users\Christian\Documents\Projects\ETH_PROJ_k26_fpga_drone_baseboard\documentation\k26_baseboard_layout.PCBDwf			

View from Bottom side (Scale 5:2)

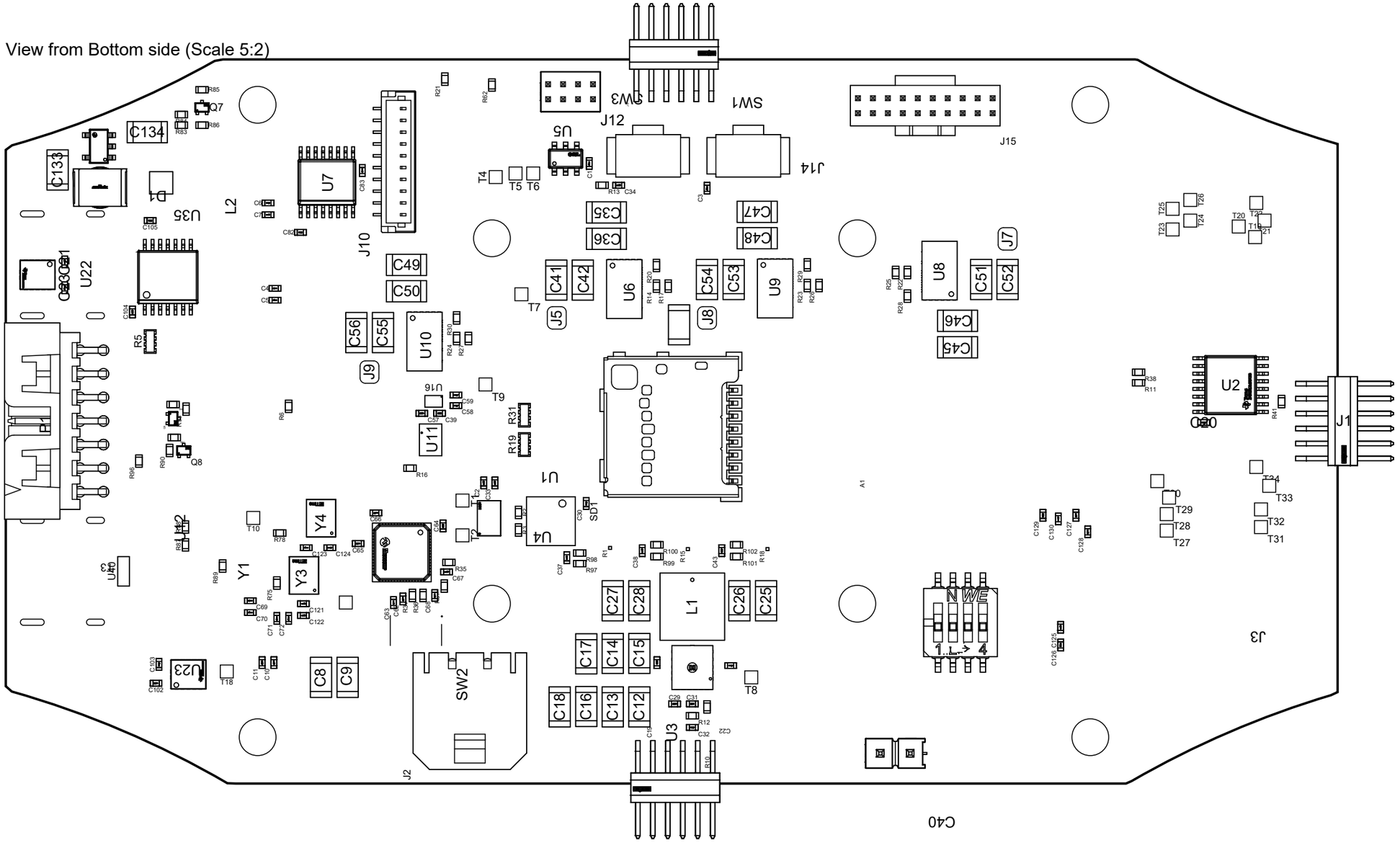

1	2	3	4	5	6	7	8

Eidgenössische Technische Hochschule Zürich
Swiss Federal Institute of Technology Zurich

Project:
k26 Baseboard Assembly Bot

Drawing number: =documentnumber Rev: r2	Format: A3	LaboratoryPBL	Sheet: k26_baseboard_assembly
Date: 15.01.2024 13:30		Drawn by: Ch. Vogt	Page * of *
File: C:\Users\Christian\Documents\Projects\ETH_PROJ_k26_fpga_drone_baseboard\documentation\k26_baseboard_assembly_bot.PCBDOC			

View from Top side (Scale 5:2)

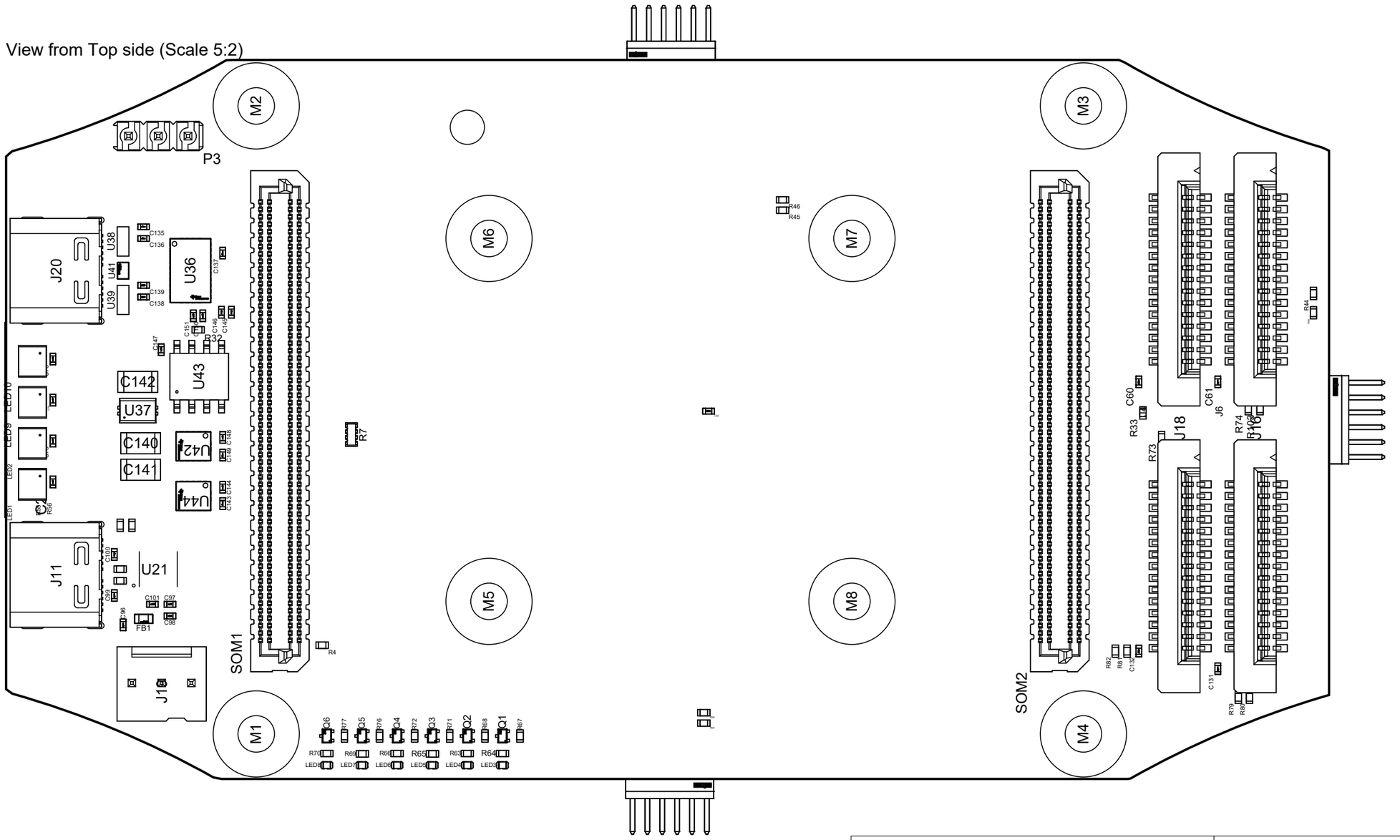

ETH Eidgenössische Technische Hochschule Zürich Swiss Federal Institute of Technology Zurich	Project: **k26 Baseboard Assembly Top**
Drawing number: =documentnumber Rev: r2 Date: 15.01.2024 13:31	Format: **A3** Laboratory PBL Drawn by: Ch. Vogt
File: C:\Users\Christian\Documents\Projects\ETH_PROJ_k26_fpga_drone_baseboard\documentation\k26_baseboard_assembly_top.PCBD	Sheet: k26_baseboard_assembly Page * of *

Designator	Name	Quantity	Footprint
C1, C2, C3, C4, C6, C10, C19, C20, C21, C22, C23, C24, C30, C33, C34, C37, C38, C39, C43, C44, C57, C58, C59, C60, C61, C62, C64, C65, C66, C69, C70, C71, C72, C73, C74, C75, C82, C83, C98, C101, C102, C103, C104, C105, C121, C123, C125, C127, C129, C131, C132, C135, C136, C137, C138, C139, C143, C144, C145, C146, C147, C148, C149, C150, C151	100n	65	CAPC0402
C5, C7, C11, C126, C128, C130	1u	6	CAPC0402
C8, C9, C40	47u	3	CAPC1206
C12, C13, C14, C15, C16, C17, C35, C36, C45, C46, C47, C48, C49, C50, C134	10u	15	CAPC1206
C18	4u7	1	CAPC1206
C25, C26, C27, C28, C41, C42, C51, C52, C53, C54, C55, C56, C133, C140, C141, C142	22u	16	CAPC1206
C29, C63	2u2	2	CAPC0402
C31	6p8	1	CAPC0402
C32	680p	1	CAPC0402
C67, C68	18p	2	CAPC0402
C96, C122, C124	10n	3	CAPC0402
C97	4u7	1	CAPC0402
C99, C100	47p	2	CAPC0402
D1	UPS5819E3/TR7	1	FP-457-04-MFG
FB1	BLM18PG600SN1D	1	FP-BLM18-0_15-t0_8-MFG
J1, J13, J14	FTSH-106-01-L-D-RA	3	FP-FTSH-106-01-L-D-RA-MFG
J2	436500200	1	CON_436500200_MOL
J3		1	FP-TSW-102-07-S-S-MFG
J4, J6, J16, J18	52610-1572	4	MOLX-52610-1572
J5, J7, J8, J9	CMP-00005-5	4	Big Solder Jumper
J10	BM10B-SRSS-TBT(LF)(SN)	1	FP-BM10B-SRSS-TBT_LF_SN-MFG
J11, J20	1054500101	2	FP-1054500101-MFG
J12	FTSH-104-01-L-D	1	FP-FTSH-104-01-L-D-MFG
J15	FTSH-110-01-L-D-K	1	SAMTEC_FTSH-110-01-L-D-K
J19	22-11-2032	1	FP-22-11-2032-MFG
L1	XGL5050-122MEC	1	IND_XGL5050_COC
L2	LQH43CN100K03L	1	FP-LQH43CN_03-MFG
LED1, LED2, LED9, LED10	3484	4	3484_ADA-L
LED3, LED4, LED5, LED6, LED7, LED8	LNJ347W83RA	6	LED0402(1005)_L
P1		1	MOLX-87833-1420_V
P3	RC-RX	1	MOLX-22-28-4033_V
Q1, Q2, Q3, Q4, Q5, Q6, Q7, Q8, Q9	RUM001L02T2CL	9	FP-VMT3-MFG
R1, R15, R18	CST0612-FC-R002E	3	CST0612-FC-R002E_BRN
R2, R3, R4, R6, R13, R16, R21, R34, R35, R41, R62, R85, R86, R89	10k	14	RES0402
R5, R7, R19, R31	CAY10-360J4LF	4	BOUR-CAY10-J4_V
R10	14kR	1	RES0402
R11, R33, R38, R39, R40, R43, R44, R45, R46, R73, R74, R79, R80, R81, R82, R103	2k2	16	RES0402
R12	25k5	1	RES0402
R14, R22, R23, R24	47k	4	RES0402
R17, R25, R26, R27	1k	4	RES0402
R20, R29	15k	2	RES0402
R28, R30	37k4	2	RES0402
R32	100R	1	RES0402
R36	8k06	1	RES0402
R37	1M	1	RES0402
R55, R56, R87, R88	5k1	4	RES0402
R57, R58	27R	2	RES0402
R63, R64, R65, R66, R69, R70	560R	6	RES0402
R67, R68, R71, R72, R75, R76, R77, R78	dnp	8	RES0402
R83	42k2	1	RES0402
R84	5k	1	RES0402
R90, R91, R92, R93, R96	100k	5	RES0402
R97, R99, R101	tbd	3	RES0402
R98, R100, R102	tdb	3	RES0402
SD1	104031-0811	1	MOLX-104031-0811_V
SOM1, SOM2	ADM6-60-01.5-L-4-2-A-TR	2	SAMTEC_ADM6-60-01.5-L-4-2-A-TR
SW1, SW3	KSS241GLFS	2	KSS241GLFS
SW2	416131160804	1	FP-416131160804-MFG
U1	PCA9617ATP	1	FP-SOT1069-2-MFG
U2	TCA9546APWR	1	FP-PW0016A-MFG
U3	MAX20008AFOC/VY+	1	21-100155B_F173A3FY+1_MXM
U4	INA3221AIRGVR	1	RGV0016A_V
U5	MAX6710QUT+T	1	FP-U6-1-MFG
U6, U8, U9, U10	MPM3632CGQV-P	4	QFN3p0x5p0x1p6_MPM3632C_MNP
U7	ISO7140CCDBQ	1	DBQ0016A
U11	NVT4858HKZ	1	NVT4858_NXP
U12	USB3320C-EZK-TR	1	FP-32QFN-3304-5X5B-IPC_C
U13, U23, U42, U44	TXU0104BQAR	4	FP-BQA0014A-MFG
U16	FPF1320UCX	1	WLCSP6_1X1.5_ONS-M
U21	FT234XD-R	1	FP-DFN-12-IPC_B
U22	MAX3378EEUD+	1	MAXM-U14+1_V
U35	MIC2288YD5-TR	1	FP-TSOT-5LD-PL-1-MFG
U36	HD3SS460RHRT	1	FP-RHR0028A-IPC_C
U37	TPS25820DSSR	1	DSS12_P9X2_TEX
U38, U39, U40	TPD4E05U06DQAR	3	DQA0010A
U41	TPD4S012DRYR	1	FP-DRY0006A-MFG
U43	SN65LVDM176D	1	D8
Y1	FA-23824.000	1	FP-FA-238_27_0000MB-C3-MFG
Y3	SIT9121AC-2B2-33E52.000000	1	FP-SiT9121-B-MFG
Y4	SIT9121AI-2B2-33E27.000000	1	FP-SiT9121-B-MFG

ETH

Eidgenössische Technische Hochschule Zürich
Swiss Federal Institute of Technology Zurich

Project:

k26 Baseboard BOM

Drawing number: 1 Rev: r3

Date: 15.01.2024 13:31

Format: A4 H

Laboratory: PBL

Drawn by: Ch. Vogt

Sheet: k26_baseboard_assembly

Page * of *

File: C:\Users\Christian\Documents\Projects\ETH_PROJ_k26_fpga_drone_baseboard\documentation\k26_baseboard_assembly_boM.PCB