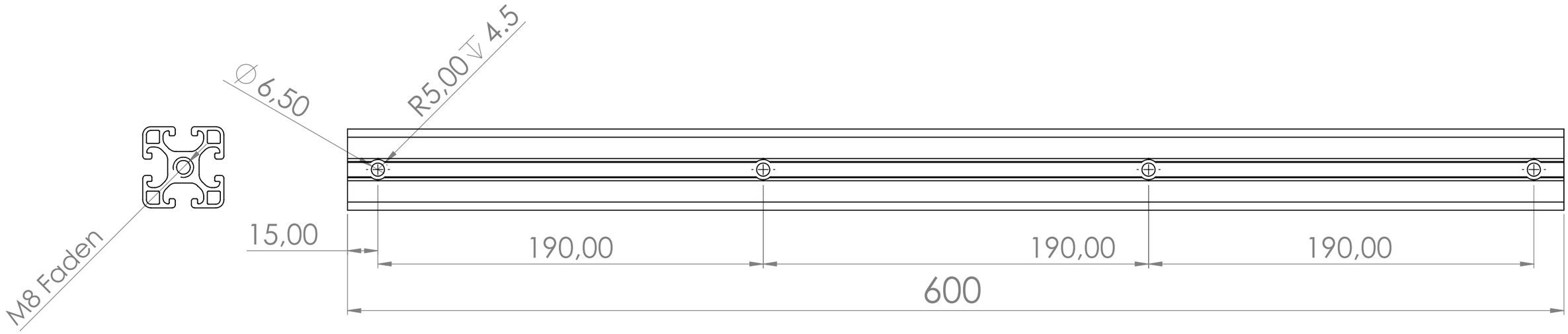

1-) Alle löcher sind ∅ 6.50 Tiefe: Durchgangsloch
2-) Beide Enden Gewinde M8 ↧ 12mm
3-) Alle R5,00 Löcher tiefe: 4.5mm

UNLESS OTHERWISE SPECIFIED: DIMENSIONS ARE IN MILLIMETERS SURFACE FINISH: TOLERANCES: LINEAR: ANGULAR:	FINISH:			DEBURR AND BREAK SHARP EDGES	DO NOT SCALE DRAWING	REVISION
	NAME	SIGNATURE	DATE		TITLE: Profile Hole Drill, 25-08-2020	
DRAWN						
CHK'D						
APPV'D						
MFG						
Q.A				MATERIAL:	DWG NO. BotProfileSide	A3
				WEIGHT:	SCALE:1:5	SHEET 1 OF 1