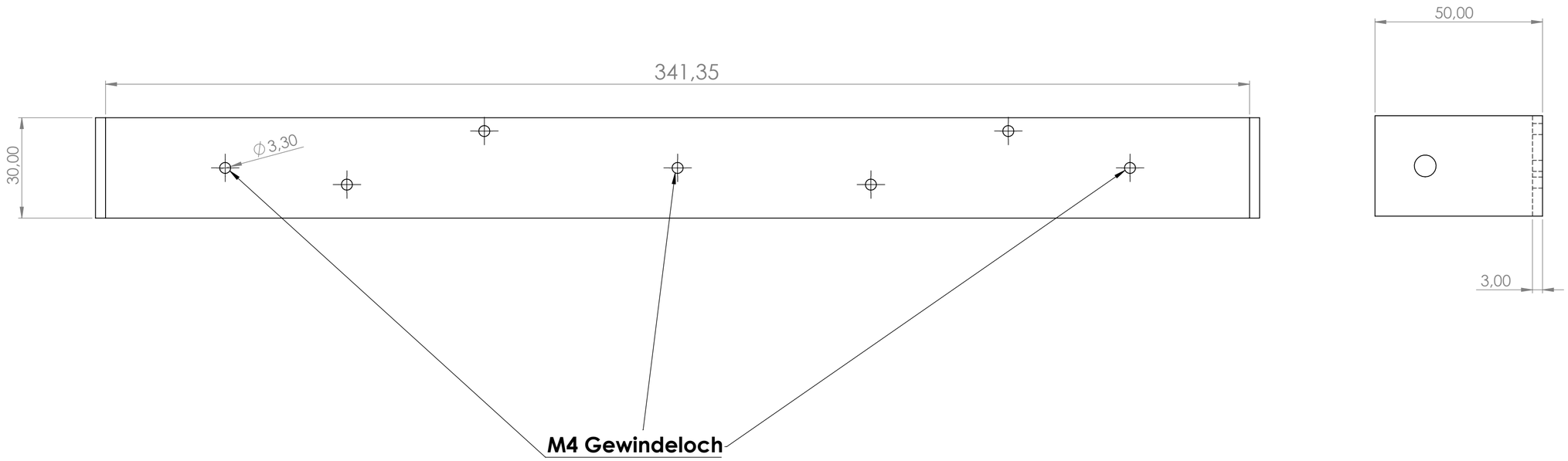

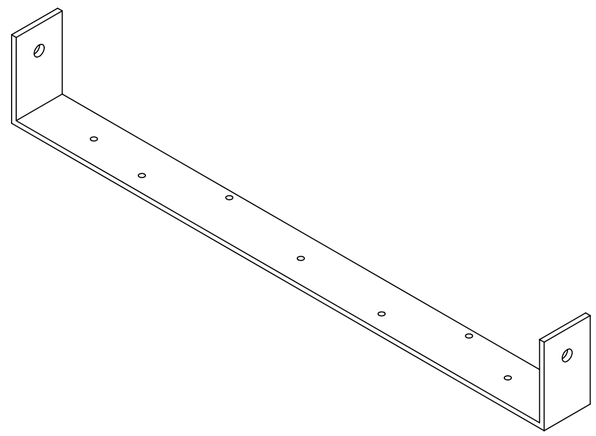

- **Insgesamt 4x**

UNLESS OTHERWISE SPECIFIED: DIMENSIONS ARE IN MILLIMETERS SURFACE FINISH: TOLERANCES: LINEAR: ANGULAR:	FINISH:		DEBURR AND BREAK SHARP EDGES	DO NOT SCALE DRAWING	REVISION
	NAME	SIGNATURE	DATE	TITLE: Bottom C Bracket	
DRAWN					
CHK'D					
APPV'D					
MFG					
Q.A				MATERIAL: Aluminium	DWG NO. 17.01.2021 A2
				WEIGHT:	SCALE:1:2 SHEET 1 OF 1