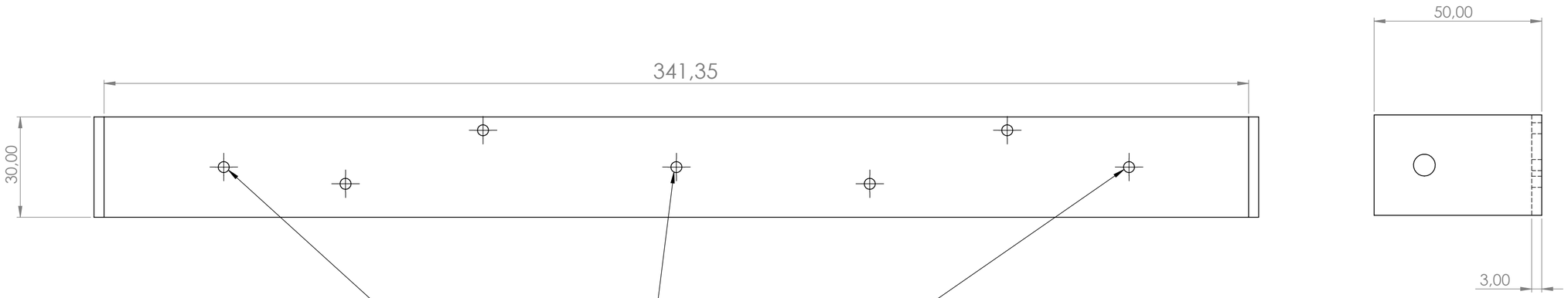

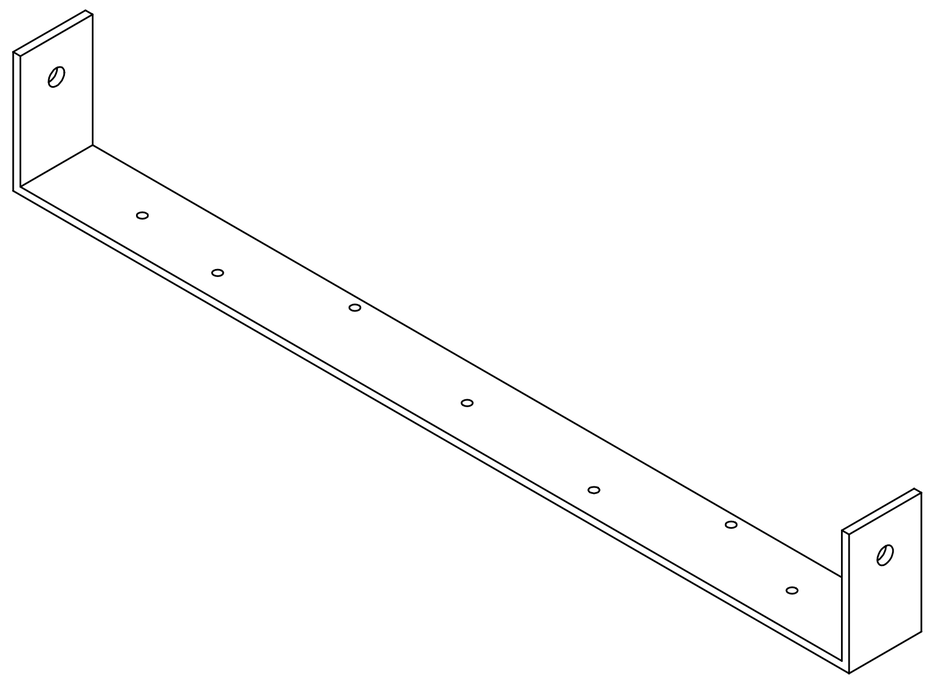

- **In total 4x**
- **This drawer is to post process(Thread) Bottom C brackets that connect bottom profile and MDF bottom plate. (You should already have the Bottom C brackets ready.)**

UNLESS OTHERWISE SPECIFIED: DIMENSIONS ARE IN MILLIMETERS SURFACE FINISH: TOLERANCES: LINEAR: ANGULAR:	FINISH:		DEBURR AND BREAK SHARP EDGES	DO NOT SCALE DRAWING	REVISION
	NAME	SIGNATURE	DATE	TITLE: Bottom C Bracket	
DRAWN					
CHK'D					
APPV'D					
MFG					
Q.A			MATERIAL: Aluminium	DWG NO. 17.01.2021	A2
			WEIGHT:	SCALE:1:2	SHEET 1 OF 1