uPLC v4

prof.martintorres@educ.ar - ETI Patagonia

ENTRADAS DIGITALES 5/10/24V

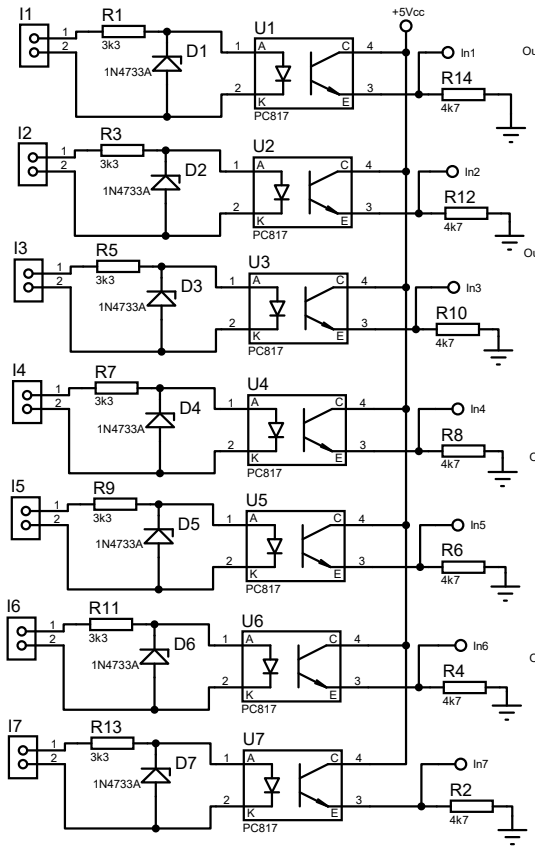

SALIDAS RELAY

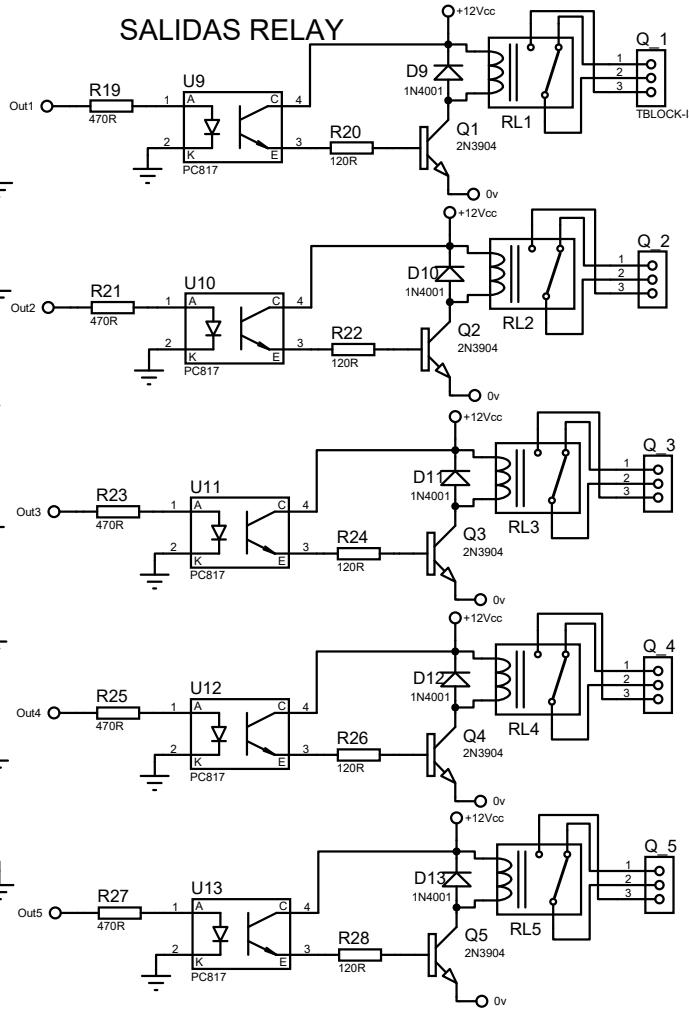

FUENTE StepDown LM2596

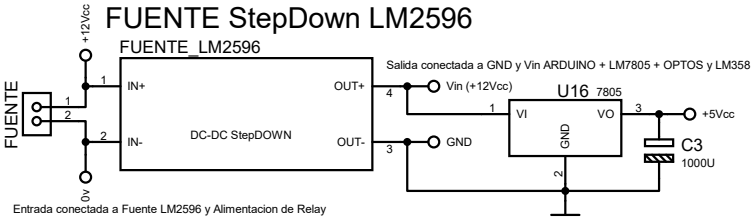

SALIDA I2c LCD 20X4

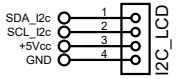

SHIELD RS485-TTL

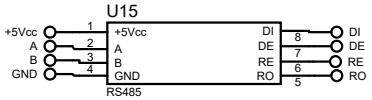

ENTRADAS ANALOGICAS 0-24V

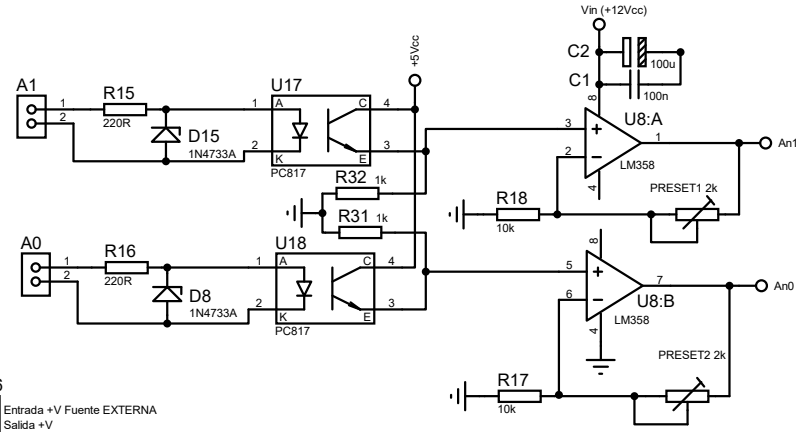

ARDUINO NANO 328

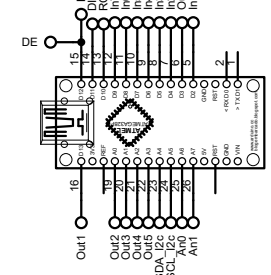

NOTA: No usar salida 5v del Arduino NANO, usar el LM7805

SALIDA PWM

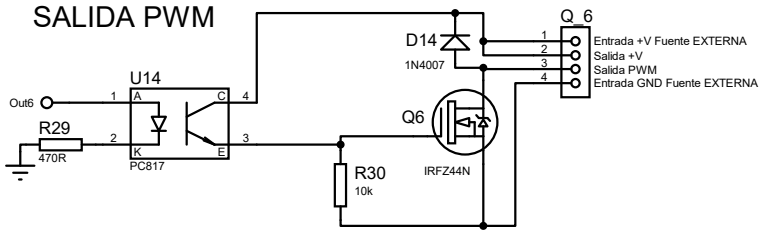

FILE NAME: uPLCv4.pdsprj	DATE: 6/3/2026
DESIGN TITLE: uPLCv4.pdsprj	PAGE: 1 of 1
PATH: C:\Users\torre\Desktop\GitHUB\IndustrINO uPLC\Hardware IndsutrINO\uP	
BY: @AUTHOR REV:@REV	TIME: 15:02:07