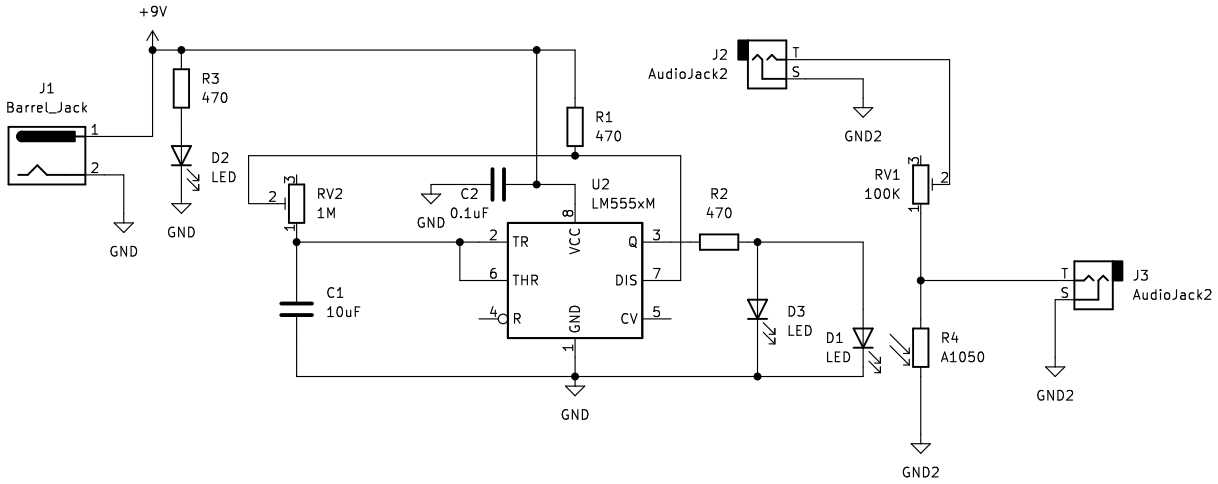

EWU IEEE

Sheet: /

File: Tremolo_V2.kicad_sch

Title: Tremolo

Size: A5	Date: 2022-01-14	**Rev: B**
KiCad E.D.A. eeschema (6.0.0)		Id: 1/1