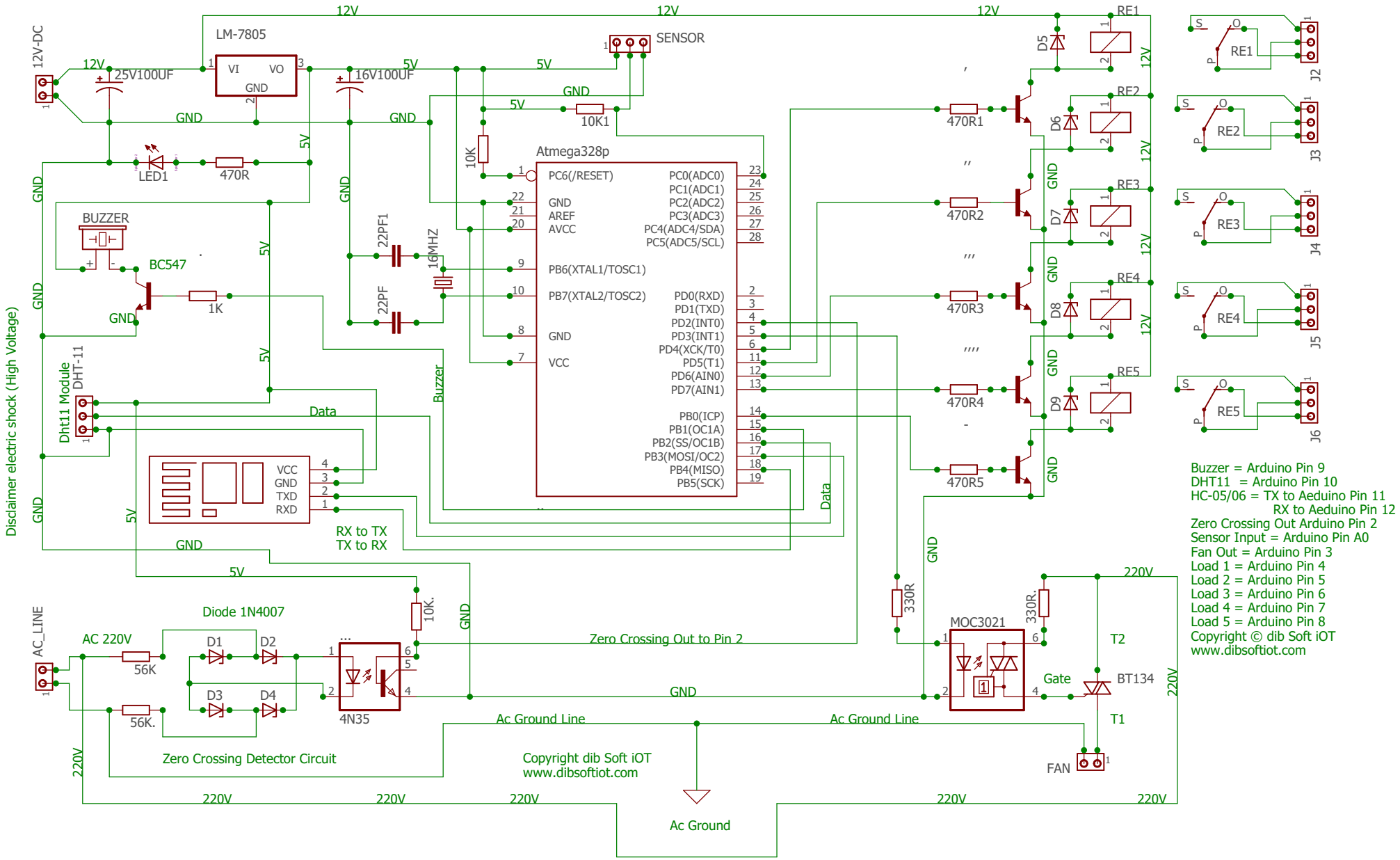
Disclaimer electric shock (High Voltage)
12V-DC
LM-7805
VI
VO
GND
25V100UF
16V100UF
12V
5V
GND
LED1
470R
BUZZER
BC547
1K
Dht11 Module
DHT-11
Data
VCC
GND
TXD
RXD
RX to TX
TX to RX
SENSOR
10K1
10K
Atmega328p
PC6(/RESET)
GND
AREF
AVCC
PB6(XTAL1/TOSC1)
PB7(XTAL2/TOSC2)
GND
VCC
PC0(ADC0)
PC1(ADC1)
PC2(ADC2)
PC3(ADC3)
PC4(ADC4/SDA)
PC5(ADC5/SCL)
PD0(RXD)
PD1(TXD)
PD2(INT0)
PD3(INT1)
PD4(XCK/T0)
PD5(T1)
PD6(AIN0)
PD7(AIN1)
PB0(ICP)
PB1(OC1A)
PB2(SS/OC1B)
PB3(MOSI/OC2)
PB4(MISO)
PB5(SCK)
22PF1
22PF
16MHZ
Buzzer
470R1
470R2
470R3
470R4
470R5
D5
D6
D7
D8
D9
RE1
RE2
RE3
RE4
RE5
J2
J3
J4
J5
J6
330R
MOC3021
330R.
220V
T2
Gate
BT134
T1
FAN
AC_LINE
AC 220V
56K
56K.
Diode 1N4007
D1
D2
D3
D4
10K.
4N35
Zero Crossing Out to Pin 2
Zero Crossing Detector Circuit
Ac Ground Line
Copyright dib Soft iOT
www.dibsoftiot.com
Ac Ground
Buzzer = Arduino Pin 9
DHT11 = Arduino Pin 10
HC-05/06 = TX to Aeduino Pin 11
RX to Aeduino Pin 12
Zero Crossing Out Arduino Pin 2
Sensor Input = Arduino Pin A0
Fan Out = Arduino Pin 3
Load 1 = Arduino Pin 4
Load 2 = Arduino Pin 5
Load 3 = Arduino Pin 6
Load 4 = Arduino Pin 7
Load 5 = Arduino Pin 8
Copyright © dib Soft iOT
www.dibsoftiot.com