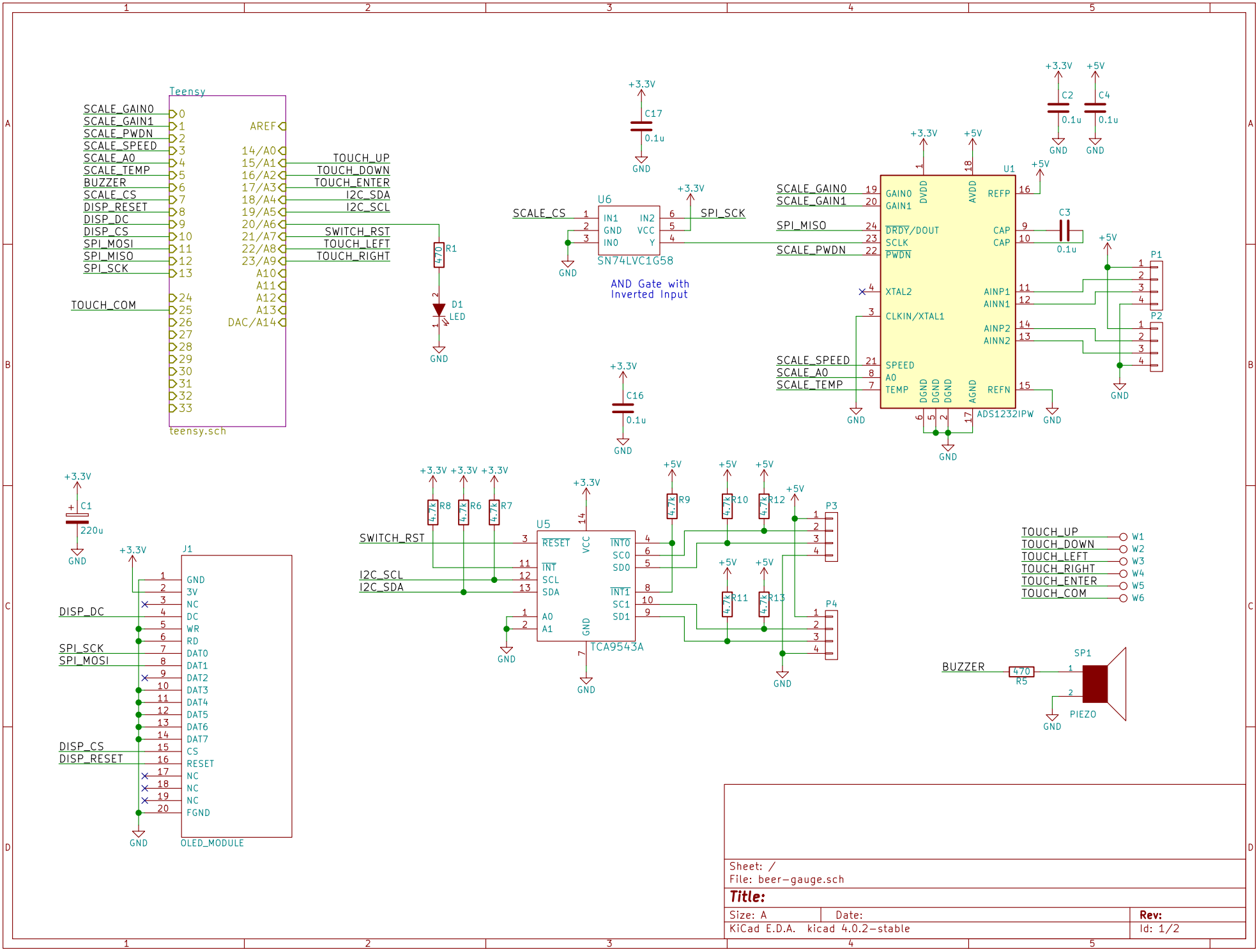

Sheet: /
File: beer-gauge.sch

Title:

Size: A	Date:	Rev:
KiCad E.D.A. kicad 4.0.2-stable		Id: 1/2

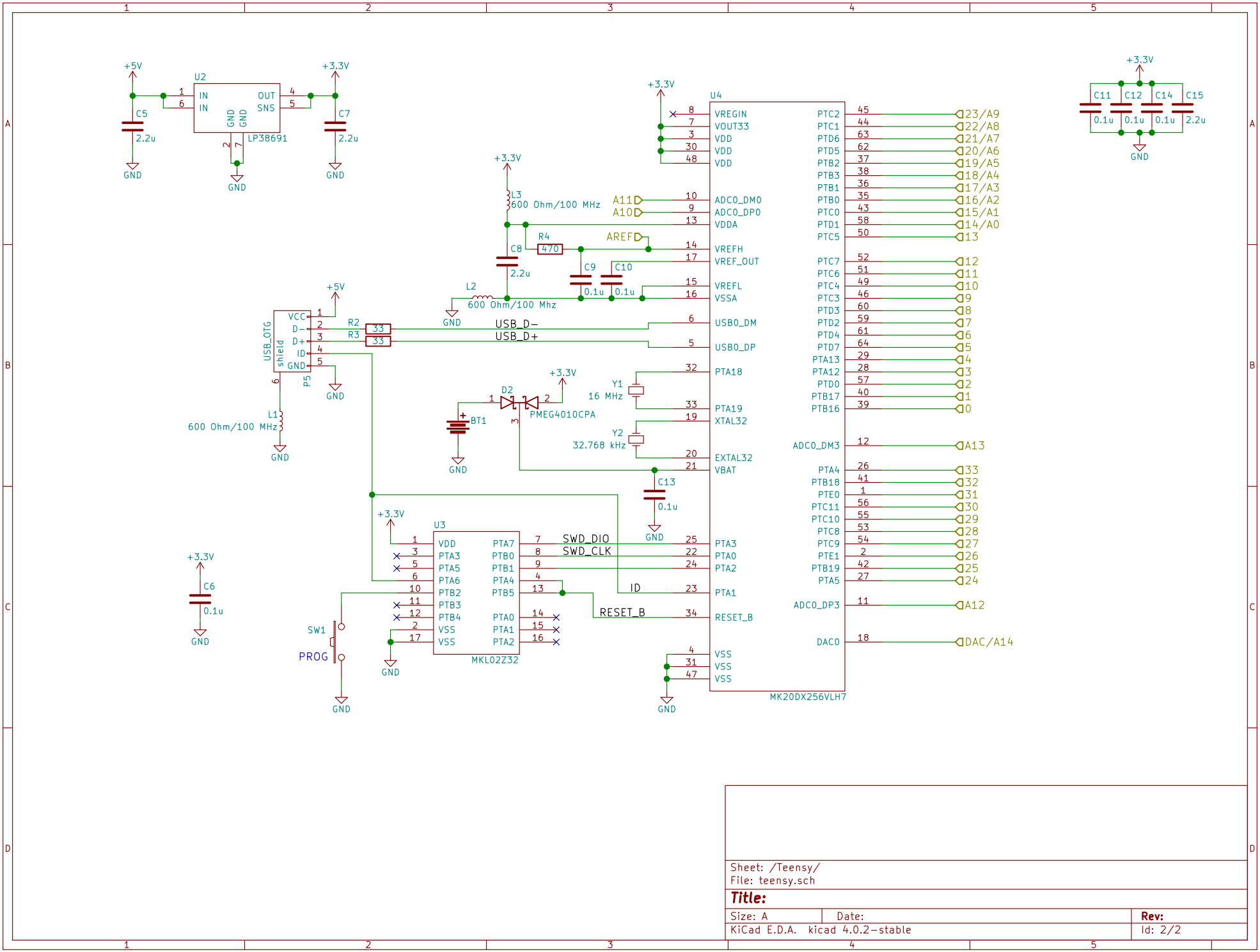

Sheet: /Teensy/
File: teensy.sch

Title:

Size: A	Date:	Rev:
KiCad E.D.A. kicad 4.0.2-stable		Id: 2/2