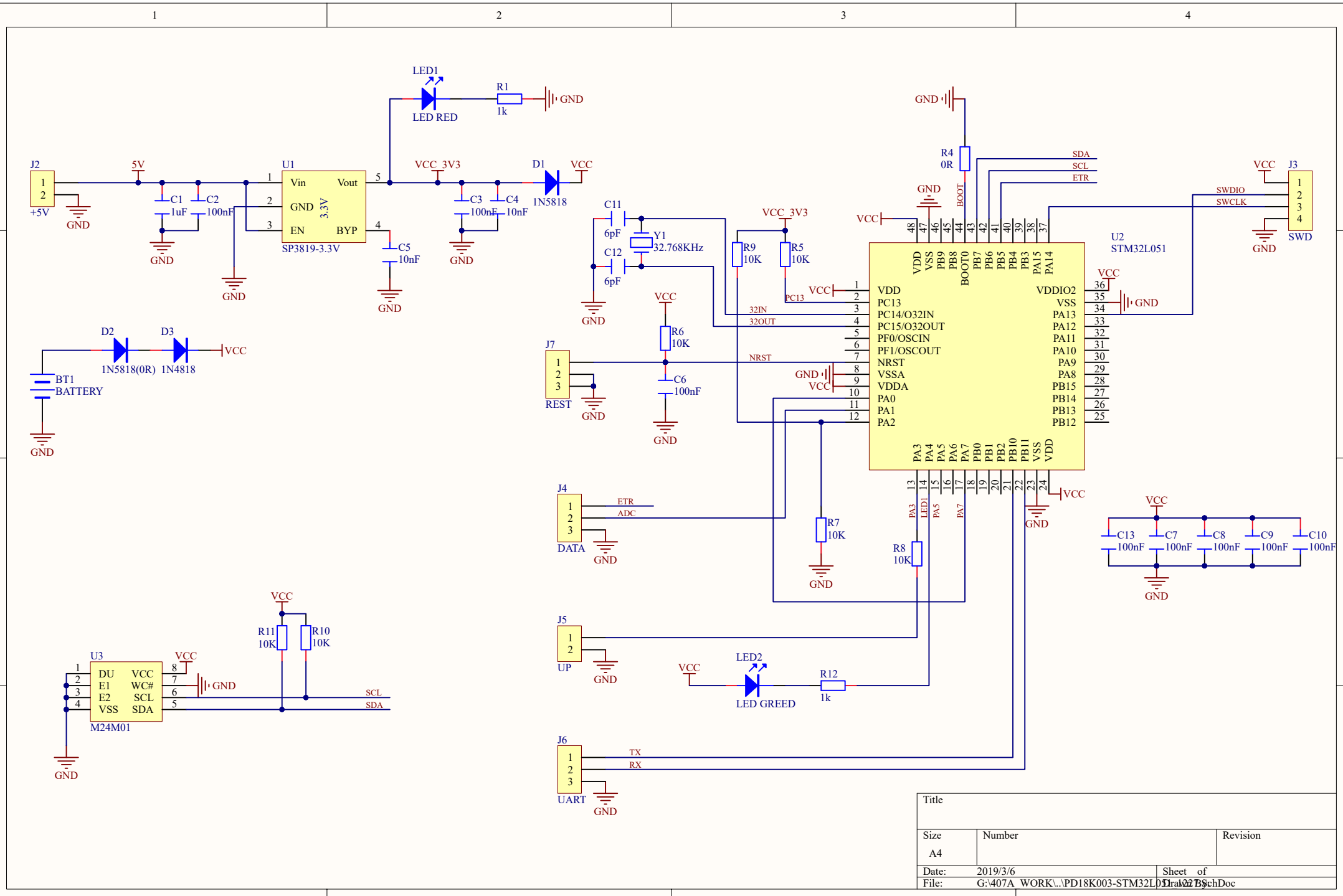

Title		
Size A4	Number	Revision
Date: 2019/3/6	Sheet of	
File: G:\407A_WORK\..\PD18K003-STM32L051.SchDoc	Drawn By:	