Heat Transfer Mid-Term Project Gregory Santilli

Part 1: Steady State Model 3/22/2026

Assumption:

1. Ignoring initial radiation from heating elements to oven inside wall.
2. Since we are at S.S., we will ignore the heat sink of the cake and tray.
3. To simplify the model, we will use an input temperature source of 350°F
4. The consecutive layers of SS and insulation on the wall of the oven will be assumed to have the same surface area because the change is relatively small.

Image of Problem Sketch and Resistive Network Part 1:

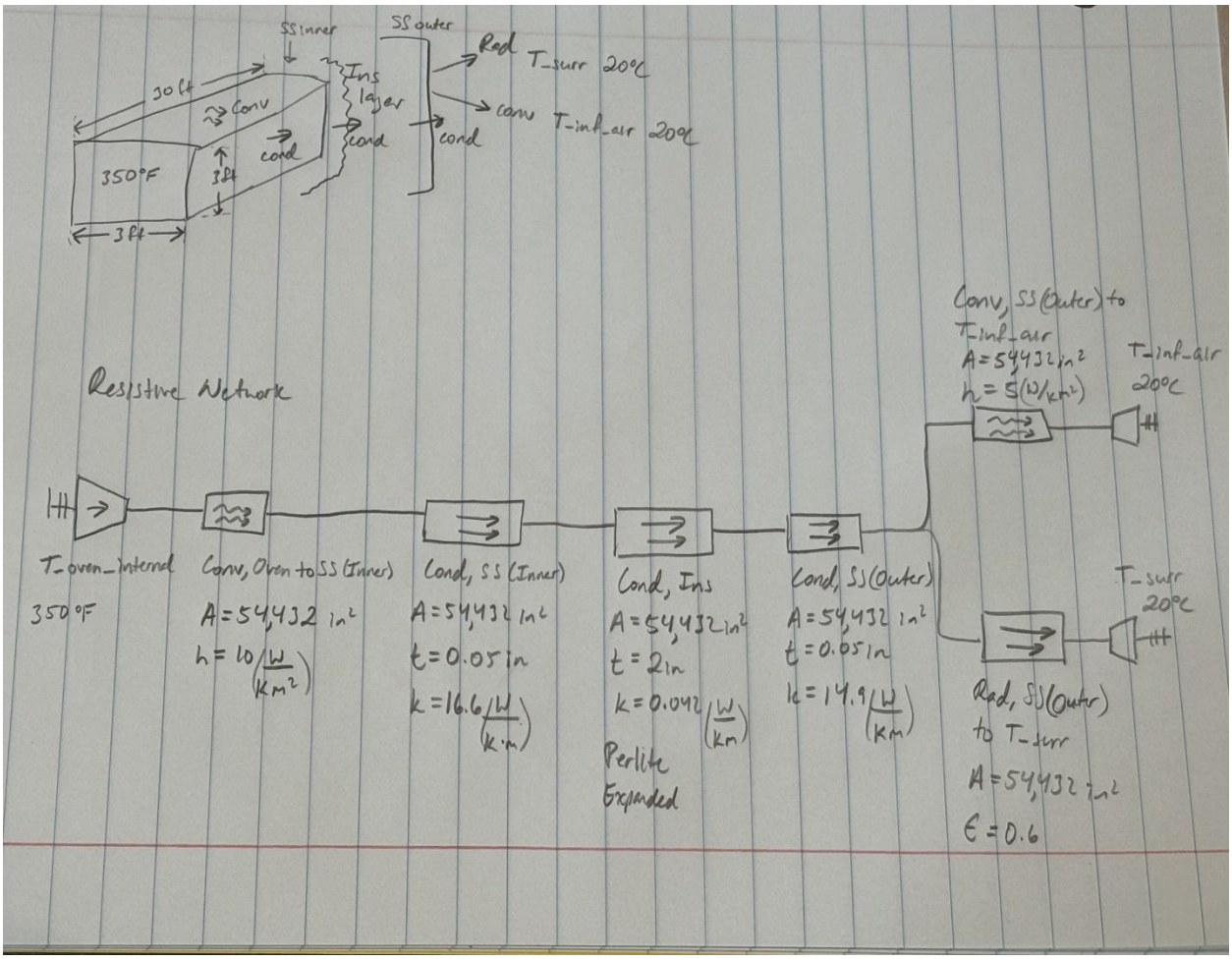

Figure 1 – Problem Sketch and Resistive Network Part 1

Image of Resistive Network in Simscape Part 1:

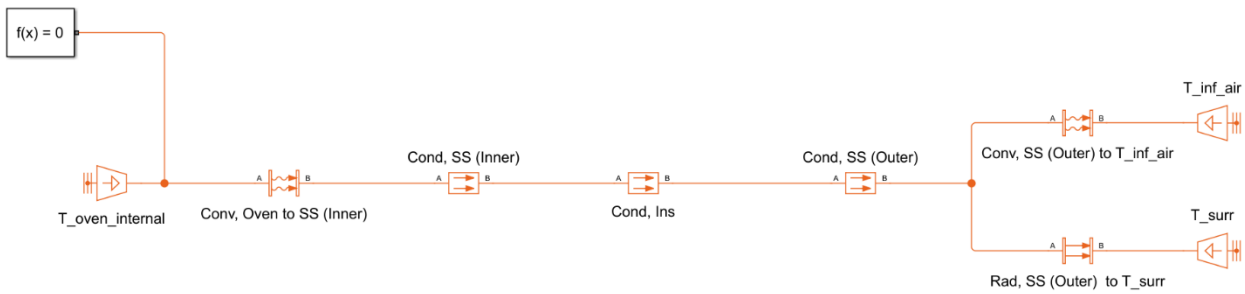

Figure 2 – Resistive Network in Simscape Part 1

Table 1 – Parameters of Resistive Network Values Part 1

Block	Temp (°F)	Area (in^2)	Heat Transfer Coefficient, h ($W/K*m^2$)	Thickness (in)	Thermal Conductivity, k (W/K*m)	Radiation Coefficient, $\epsilon*\sigma$ (W/K^4*m^2)
T_oven_internal	350	--	--	--	--	--
Conv, Oven to SS (Inner)	--	54,432	10	--	--	--
Cond, SS (Inner)	--	54,432	--	0.05	16.6	--
Cond, Ins	--	54,432	--	Varied	Varied	--
Cond, SS (Outer)	--	54,432	--	0.05	14.9	--
Conv, SS (Outer) to T_inf_air	--	54,432	5	--	--	--
Rad, SS (Outer) to T_surr	--	54,432	--	--	--	0.6 *5.67e-8
T_inf_air	68	--	--	--	--	--
T_surr	68	--	--	--	--	--

Parameters Explained:

The initial temperature for the oven was given from the problem, and the temperature of surrounding and inf air were assumed 20°C or 68°F. Although physically there would be a difference in the areas for the layers past the inner oven layer, the change wouldn't be significant, so the areas selected were calculated from the surface area of the inside of the oven using the given measurements. From searching online, industrial ovens range from 25 to 75, but assuming natural convection, the heat transfer coefficient was assumed to be $10W/K*m^2$. The thickness of 18-gauge stainless steel is 0.05in. I chose to use AISI 304 stainless steel, and the thermal conductivity varied slightly at different temperatures, so for the inside layer at around 400K, 16.6 (W/K*m) was used, and for the outer layer, 14.9 (W/K*m) was used. These values were from the textbook pages. Again, using the textbook, the emissivity for stainless steel was 0.6.

The insulation was the determining factor in allowing the system to work, so a table of viable insulations and parameters can be seen below in **Table 2**

Table 2 – Parameters of different types of insulation

Insulation Type	Thermal Conductivity, k (W/K*m)	Thickness (in)	Max Allowable Temp (°F)	Surface Temp (Simscape) (°C)	Surface Temp (Hand Calculations using Matlab)	Rate of Heat Loss (W)
Cellular Glass	0.058	3	900	31.86	31.85	3,596.46
Perlite, Expanded	0.042	2	1200	32.71	32.70	3,860.09
Calcium Silicate	0.06	2	1200	32.20	32.19	3,702.66

Cellular glass is more expensive, but it is non-flammable and strong. Perlite Expanded is very cheap, good in high temperature applications and is usually used in furnaces and industrial ovens. Calcium Silicate could also be used as it is around the cost of cellular glass and has similar properties.

Table 3 - Price Comparison of Material

Insulation Type	Area Needed (ft^2)	Thickness Needed (in)	Unit Price($/$ft^2$ for required thickness)	Total Cost ($)
Cellular Glass	378	3	~15	5,670
Perlite Expanded	378	2	~4	1,512
Calcium Silicate	378	2	~6	2,268

The cheapest material would be Perlite Expanded. Each material has a safety of at minimum about 1200W. So, here I would go with Perlite Expanded.

Comparing with Hand calculations and simulation

The hand calculations were performed in MATLAB. The equation used was Q_dot_in = Q_dot_out, calculated around the B side of Cond, SS (Outer) to get the surface temperature of the oven. The equation expanded out to:

$$\left(\frac{T_{oven}-T_{Surf}}{R_{Th_{Total}}}\right) - h_{Surf\rightarrow air} * A_{Oven} * \left(T_{Surf} - T_{Air\ Inf}\right) - \epsilon * \sigma * A_{oven} * \left({T_{Surf}}^4 - {T_{Surr}}^4\right) = 0$$

Equation 1 – Energy Balance to Solve for Surface Temperature of the Oven

MATLAB was used to solve the function numerically to get the oven's surface temperature. The MATLAB (hand calculations) were almost the same as the Simscape results.

Part 2: Transient Model

Assumption:

1. There is a constant heat input of 350°F inside of the oven
2. The cake and tray are placed inside of the oven such that there is minimal heat transfer from mechanism they rest on to the tray and the cake
3. Lumped capacitance assumption that the entire cake will heat up on the outside and inside at nearly the same time
4. The tray is just big enough to fit the cake inside of the volume and has thickness of 24-gauge stainless steel (Volume of tray is 24.05in by 24.05in by 4.025in – Cake dimensions of 24in by 24in by 4in)
5. The Cake was assumed to share similar properties of chicken

Image of Problem Sketch Part 2:

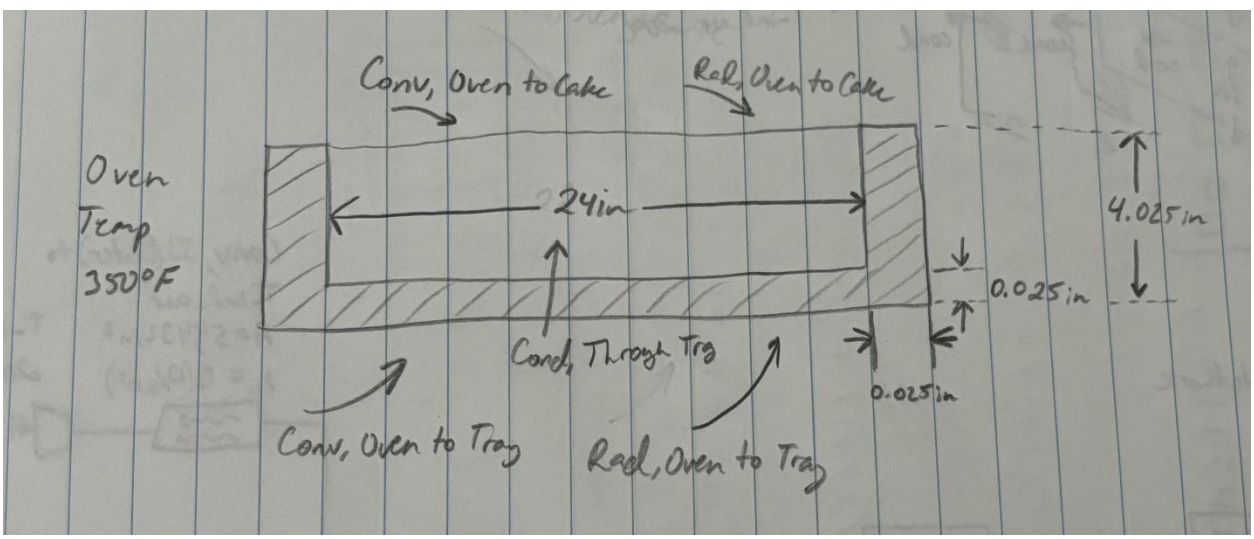

Figure 3 – Problem Sketch Part 2

Image of Resistive Network Part 2:

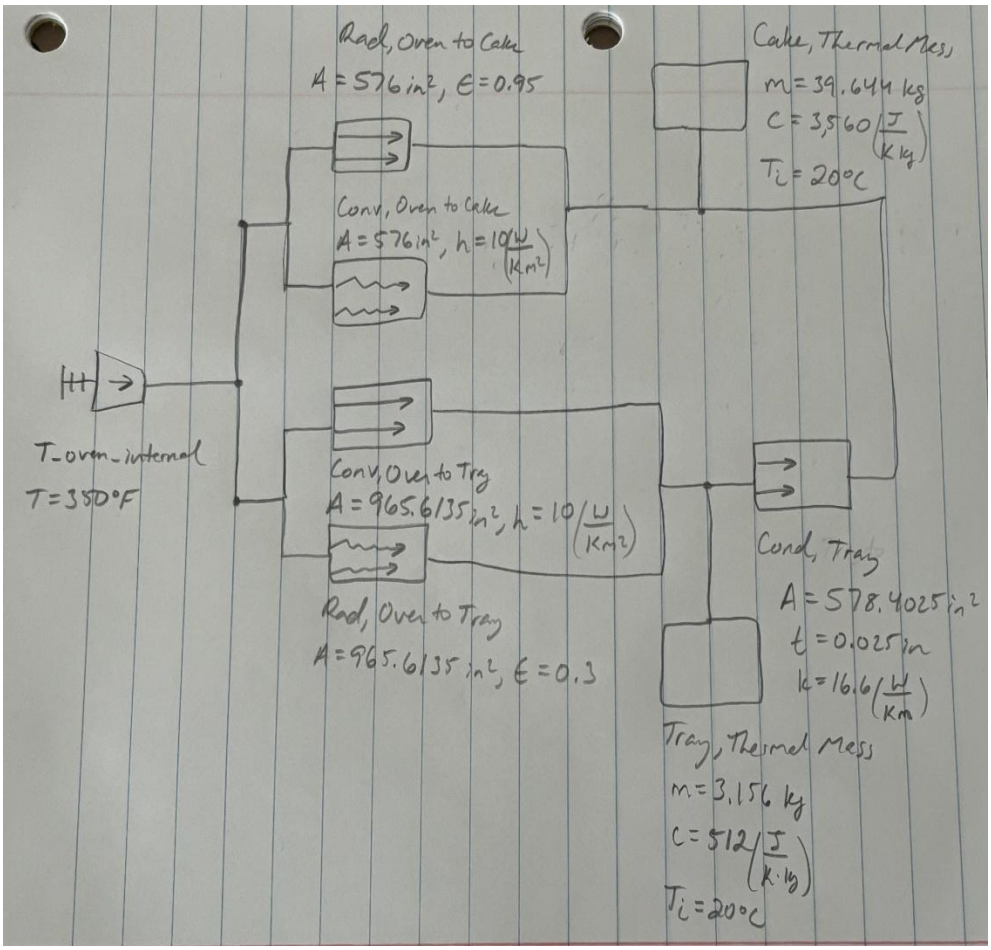

Figure 4 - Resistive Network Part 2

Image of Resistive Network in Simscape Part 2:

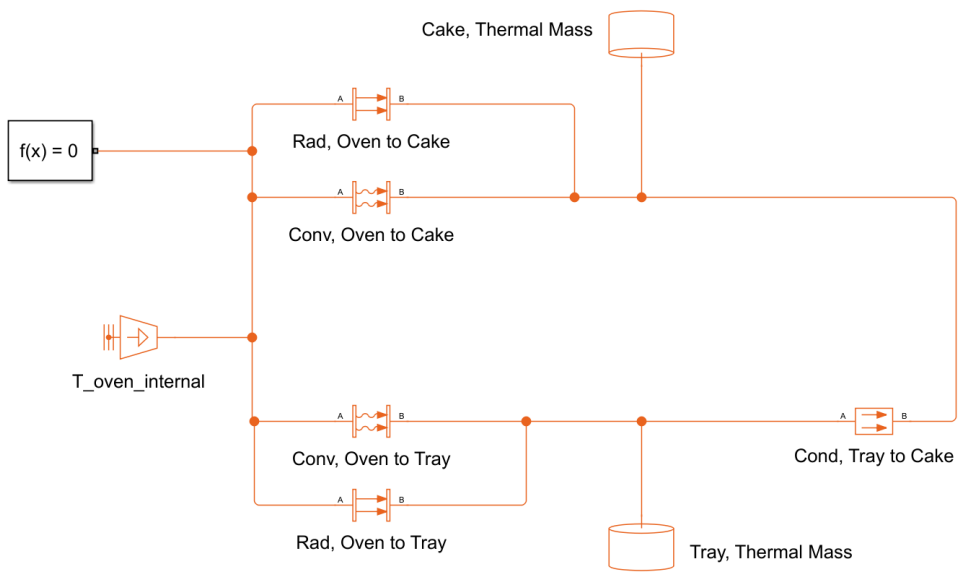

Figure 5 – Resistive Network in Simscape Part 2

Table 4 – Parameters of Resistive Network Values Part 2

Block	Temp (°F)	Area (in^2)	Heat Transfer Coefficient, h ($W/K*m^2$)	Thickness (in)	Thermal Conductivity, k (W/K*m)	Radiation Coefficient, $\epsilon*\sigma$ (W/K^4*m^2)	Mass, m (kg)	Specific het, c (J/K*kg)
T_oven_internal	350	--	--	--	--	--	--	--
Rad, Oven to Cake	--	576	--	--	--	0.95 *5.67e-8	--	--
Conv, Oven to Cake	--	576	10	--	--	--	--	--
Rad, Oven to Tray	--	965.6135	--	--	--	0.3 *5.67e-8	--	--
Conv, Oven to Tray	--	965.6135	10	--	--	--	--	--
Cond, Tray to Cake	--	578.4025	--	0.025	16.6	--	--	--
Cake Thermal Mass	68	--	--	--	--	--	39.644	3560

Tray Thermal Mass	68	--	--	--	--	--	3.156	512

Parameters Explained:

The initial temperature for the oven was given from the problem, and the temperature of the thermal masses were assumed to be 20°C or 68°F. For radiation and convection from oven to cake, the areas were both 576in^2 which is the top surface areas. For radiation and convection from oven to tray, the bottom surface and 4 side surfaces were used for the total area which is 965.6135in^2. For conduction oven to tray, only the top surface of the tray was taken to be in contact with the cake and was 578.4025in^2. For the h value in the oven, 10W/K*m^2 was used again. The thickness of conduction was 0.025in which is the thickness of the bottom layer of the tray the conducts heat. Thermal conductivity of the tray was 16.6 (W/K*m) same as in the steady state model. The emissivity values were obtained from the textbook. 0.95 was given for chicken, and the tray was assumed to be clean (not extremely oxidized) so 0.3 was used. Masses of the tray and cake were calculated using the densities from the textbook and the volumes of both. Density multiplied with the volume gives mass. The mass of the cake was 39.644 kg, and the tray was 3.156 kg. The specific heats of the cake and tray were used from the textbook and are 3,560 and 512 (J/K*kg) respectively.

From this simscape model, the cake should take about 55 minutes to get to 160°F. With assuming lumped capacitance this makes sense compared to how long it usually takes to cook chicken.

Biot Number:

Biot Number = ((h*L)/k) → where h is the heat transfer coefficient, L is the ratio of the volume of the mass divided by the surface area exposed to convective heat transfer, and k is the thermal conductivity of the mass.

$$Volume_{Chicken} = 2304\ in^3$$

$$SA_{Chicken,Exposed} = \langle 24\ in * 4\ in * 4 \rangle + \langle 24\ in * 24\ in \rangle = 960\ in^2$$

$$L_c = \frac{Volume_{Chicken}}{SA_{Chicken,Exposed}} = 2.4\ in$$

$$h = 10 \left(\frac{W}{K * m^2} \right)$$

$$k = 0.476 \left(\frac{W}{m * K} \right)$$

$$Biot_{Number} = \frac{h * L_c}{k} = 1.281$$

Figure 6 – Bio Number Calculation

This biot number is not acceptable to use the lumped capacitance assumption.

Part 3: SolidWorks Simulation

SolidWorks Basic Tray Assumptions:

1. The tray is made out of 24-gauge SS
2. The cake is surrounded entirely by SS, where the volume would be, V = (24.05in * 24.05in * 4.025in) – (24in * 24in * 4in) = 24.07in^3.
3. The surrounding surface temperature and temperature are both 350°F.
4. Heat Transfer Coefficient, is assumed to be 10 (W/K*m^2)
5. Emissivity of chicken and SS are assumed to be 0.95 and 0.3 respectively.
6. Tray modifications that remove material can be ignored as long as they are relatively low (Total Volume = 2304in^3, Removed Volume for Stacked Tray Design = 16in^3, which is about 0.694% of the total volume to be cooked.

The basic tray model in SolidWorks estimates that the 4in thick cake should reach an internal temp of 160°F in about 2.8 hours. You can see the SolidWorks Model below in full size in **Figure 7**.

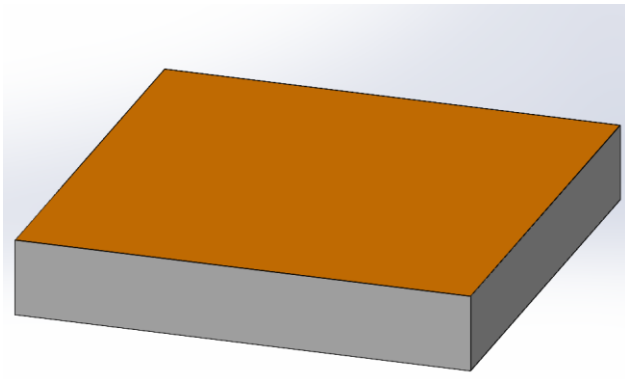

Figure 7 – Full Scale Basic Model

To minimize simulations time, a thermal study was conducted on a 1in-by-1in slice of the cake. The slice was taken from the middle of the cake because the outsides would be slightly warmer due to conduction through the tray. Since the middle of the cake would be the coldest, it that section was at the goal temperature of 160°F, then the rest of the cake could be assumed to be at least that high of a temperature. For material selection, we chose a material and modified it to match the chicken and SS. The values for both materials can be seen in **Table 5** Below.

Table 5 – Chicken and SS material values for SolidWorks

Material Properties	Mass Density in (kg/m^3)	Thermal Conductivity in (W/(K*m))	Specific Heat in (J/(K*kg))
Chicken	1050	0.476	3560
Stainless Steel	8055	16.6	512

For both materials, the cake slice and bottom tray were initially set to a temperature of 20°C. The thermal loads applied were the convection to the top of the cake and the bottom of the tray. Radiation loads were applied to the top of the cake and the bottom of the tray, with emissivity's of 0.95 and 0.3 respectively with ambient temperatures of 350°F. The view factors were assumed to be 1 as well. The Simulation Data can be seen below in **Figure 8**.

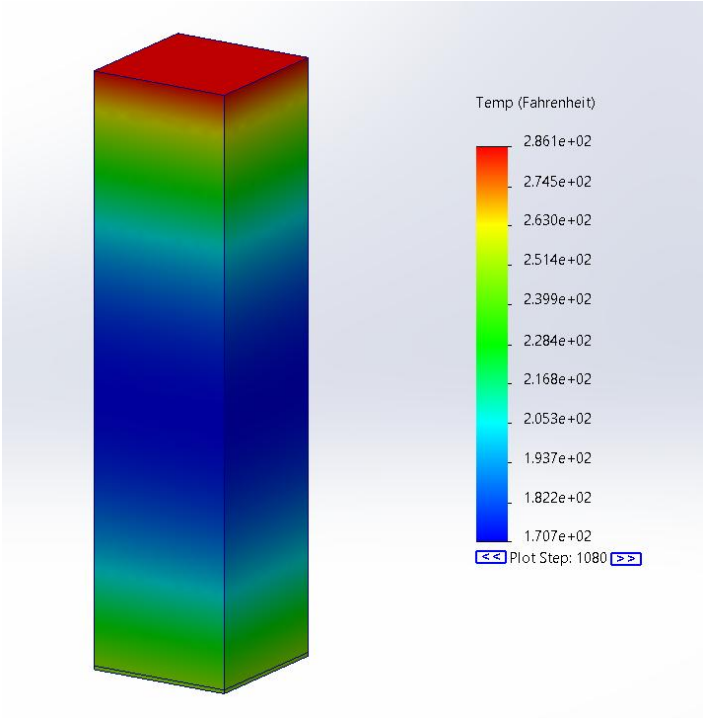

Figure 8 – Basic Model Simulation

This basic model was able to achieve an internal temperature of 160°F in about 2.8 hours.

Many different modifications have been made to try to reduce the cooking time significantly. At first, I tried to add small cylinders that start from the bottom of the tray and rise roughly halfway through the cake to transfer heat from convection and radiation to the tray outside and conduct through the cylinders to create a shorter part for heat transfer to cook the inside of the cake faster. Then I tried lifting the cylinders from the bottom of the tray to the top to gain some of the heat from the top surface of convection and radiation. This helps a little more but only decreased the time to approximately 2h and 15min. There were about 5 cylinders at 0.5in diameter for this design. I then tried to change to spear like tips for the cylinders to increase the surface area to collect more heat, but that didn't help as much. After that, I tried a more aggressive approach to reduce the conduction distance through the cake by implementing a brownie tray design, where the cake was divided into 16 and later 25 slices. These changes were more meaningful but were still not significant. One other idea I had was that convection and radiation were based on the areas they could come in contact with, so I thought almost creating thin sheets of SS as a sponge for heat would help transfer the heat better through the cake to cook more evenly and efficiently. Unfortunately, after simulating this idea, this heat sink design was worse than the other modifications. This was because even though I added in more area to heat and transfer convection and radiation, at the same time it added more mass which takes longer to heat, so the slope of the curve wasn't as large as the others until the SS was fully saturated. These designs and heat curves can be seen below in **Figures 9-16**.

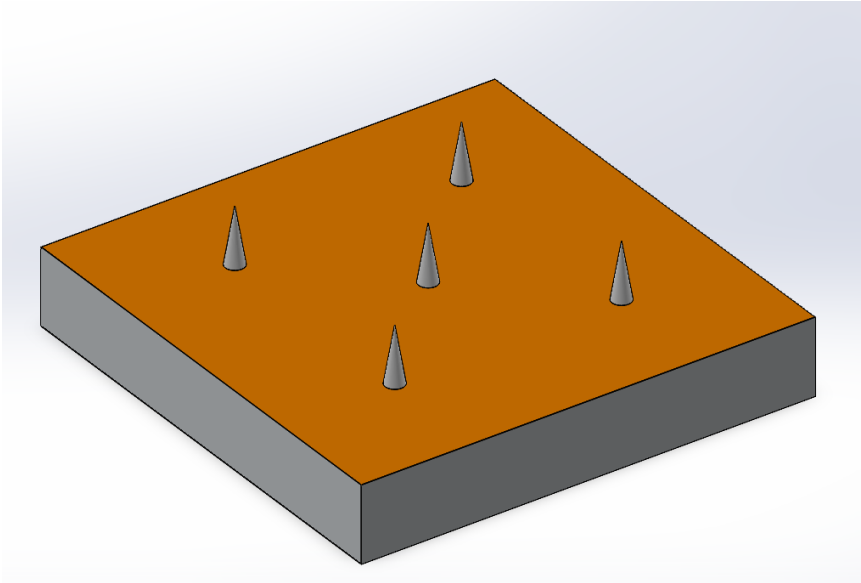

Figure 9 – Spike Design

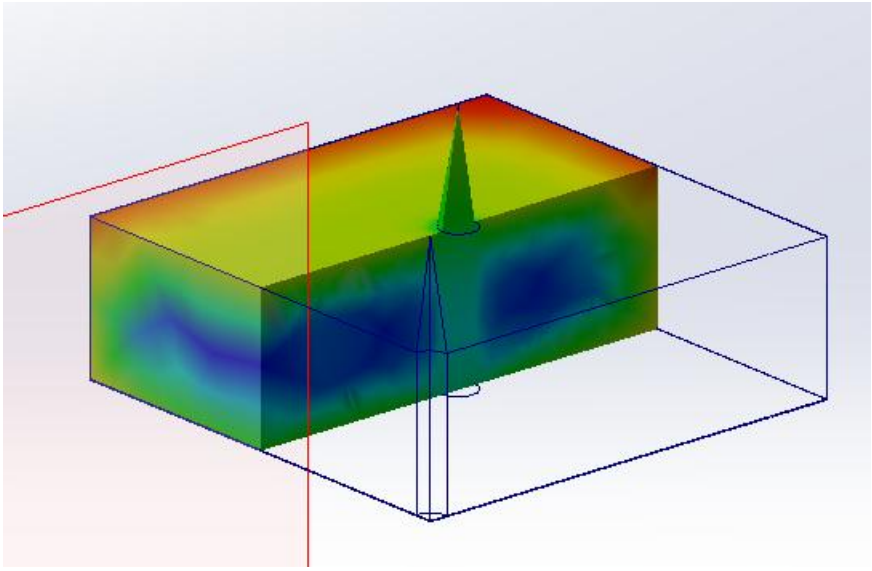

Figure 10 – Spike Design Simulation

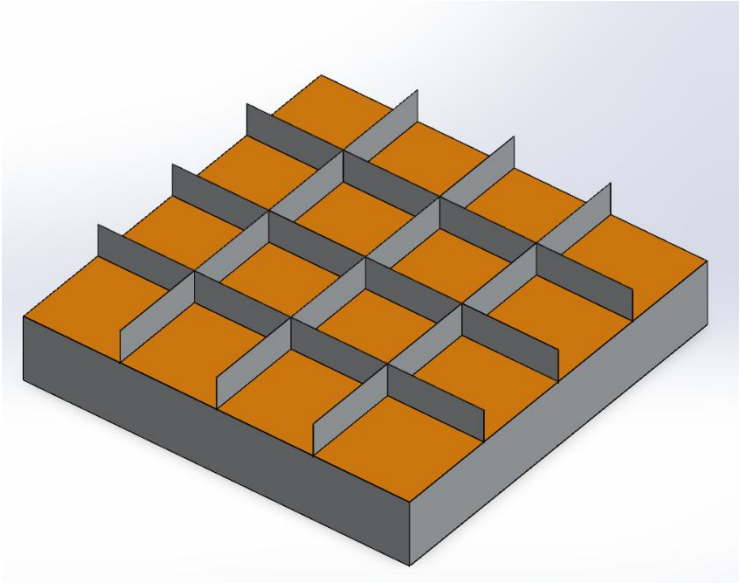

Figure 11 – 4 by 4 Brownie Design

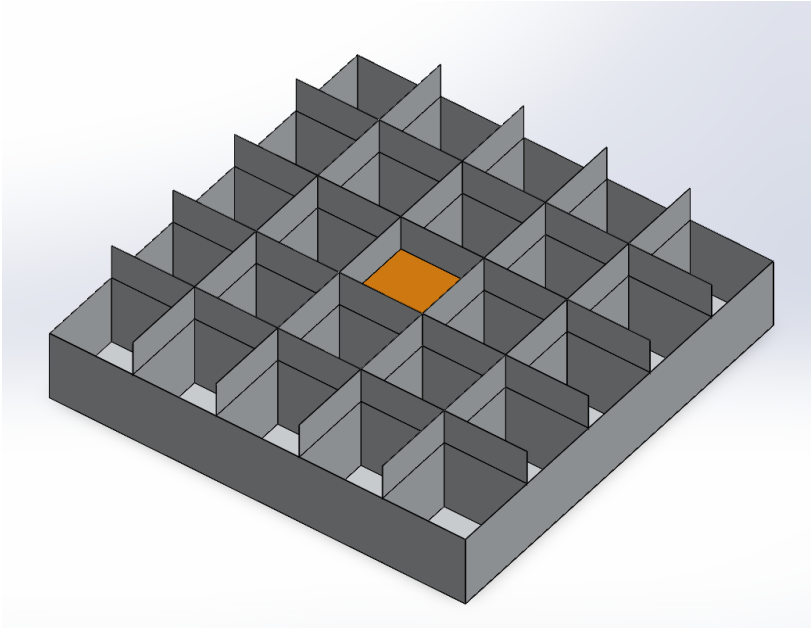

Figure 12 – 5 by 5 Brownie Design

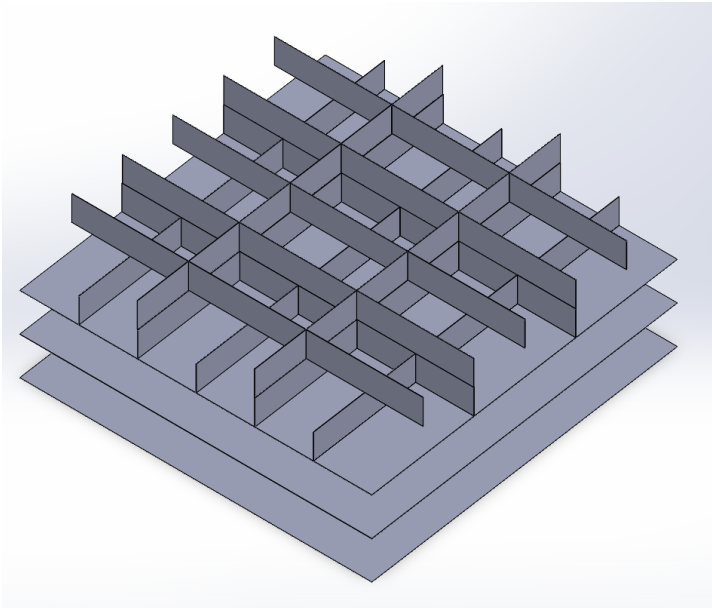

Figure 13 – Heat Sink Design

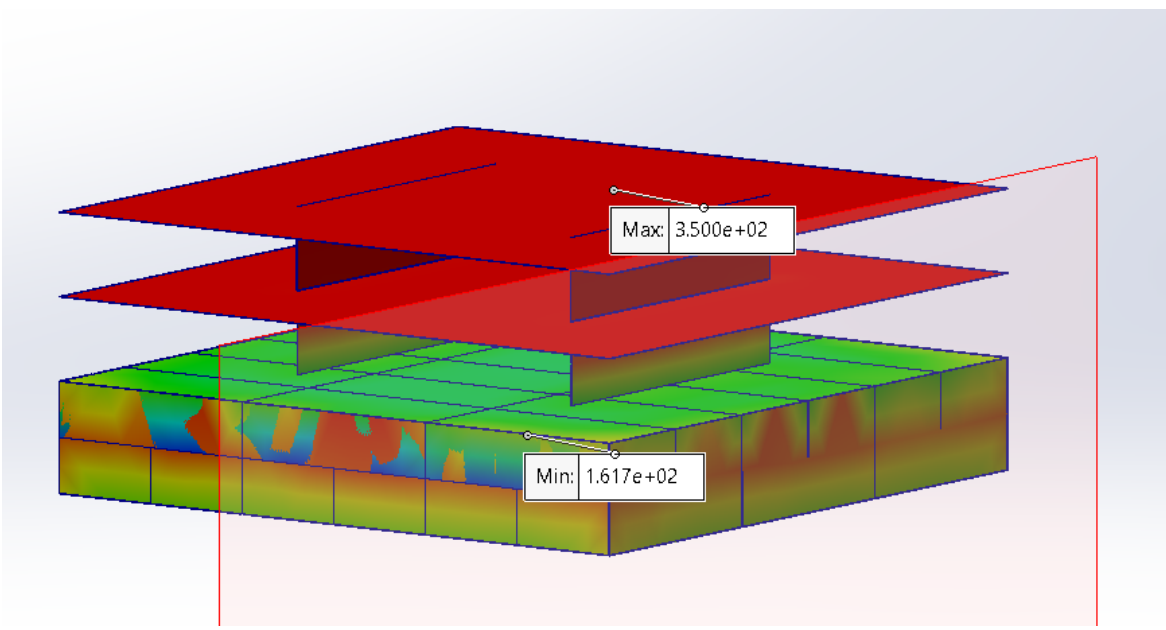

Figure 14 – Heat Sink Design Simulation

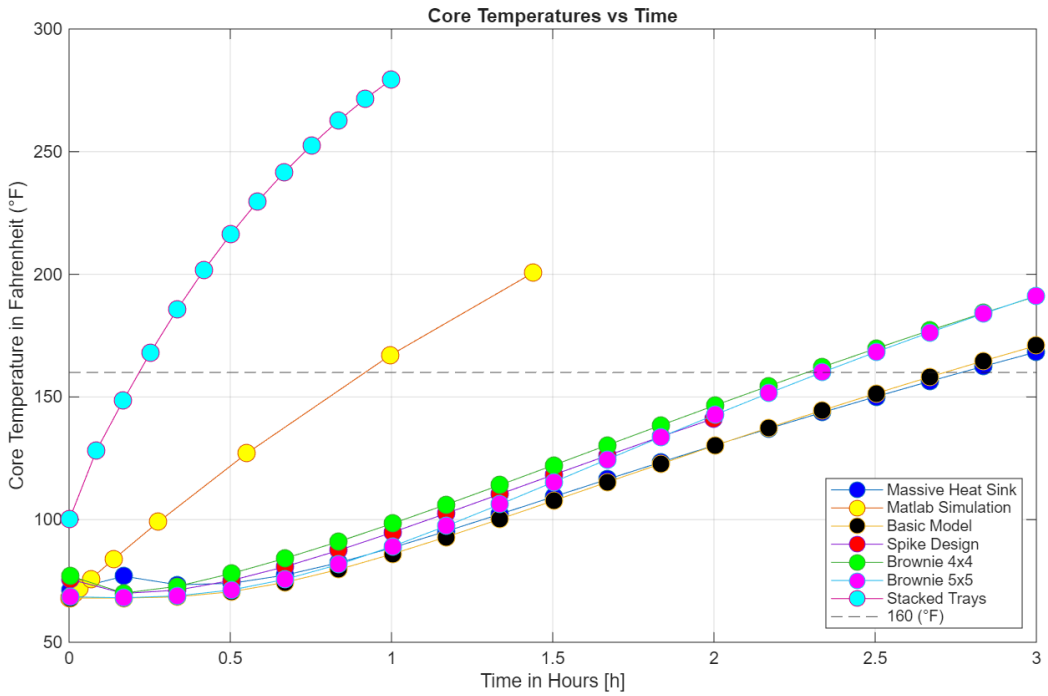

Figure 15 – Core Temperature vs Time Graph of All Designs

In the graph above, I plotted the time in hours on the x-axis, and the internal temperature of the coldest parts (internal of the cakes) in the simulation. The dotted line is the 160°F line.

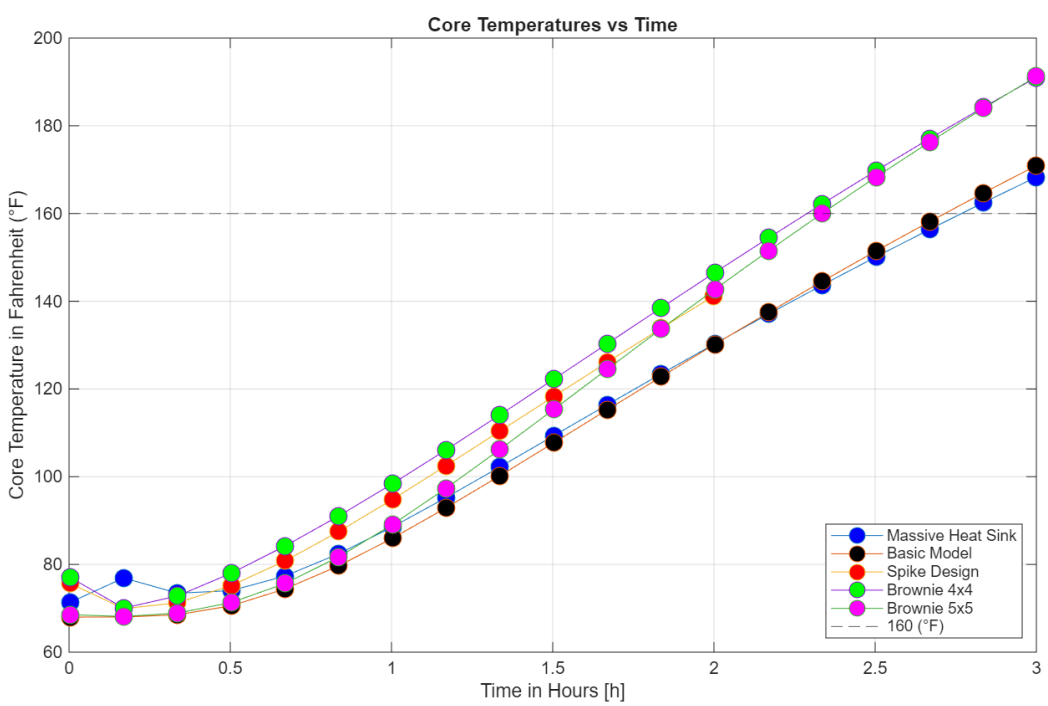

Figure 16 – Core Temperature vs Time Graph Alternate Designs

This graph is plotted the same as **Figure 15**, but I removed the MATLAB Simulation and the stacked tray design to better see the differences between the alternate designs.

Interestingly, looking at the first graph, you can see the modifications that involved keeping the cake at a 4in thickness and trying to get heat to transfer through SS to enter cross-sections of the cake made very minimal improvements, between 2.1 and 2.4 hours. This is compared to the basic model taking 2.8 hours. Also, looking at the beginning of the modified trays curves, they initially dip below 68°F, which physically doesn't make sense, when 68°F is what all parts are at, and it can only heat up. This is likely due to overshoot from the time step in SolidWorks simulation. I used 10 seconds to make the simulation time manageable. One last detail when looking at the alternate designs is that the 4 by 4 sectioned tray is quicker than the 5 by 5 sectioned tray. This could be due either to again, the time step being not as accurate and then having MATLAB interpolating the data between the points or maybe the extra material needed a little longer to get to a sufficient temperature to continue cooking the cake, or a combination of all of it. Looking at the slope of the MATLAB Simulation, the curve almost looks linear when approaching 160°F. This is likely due to the lumped capacitance assumption. Finally, looking at the stacked tray design, you can see the temperature rising initially extremely fast, and it would continue the exponential curve approaching 350°F if I let it run long enough. From this graph, the stacked design is the fastest way to reach an internal temperature of 160°F.

Assessing the stacked tray design from a manufacturing standpoint, I would recommend using the 24-gauge SS sheets, and bending them into the tray shape, 24.05in by 24.05in by 4.025in. Then getting thin or hollowed tubes to act as a lift to place the trays on top of each other. These could be welded on. Hollow or thinned tubes would be easier to weld. The SolidWorks drawing of the tray can be seen below in **Figure 17**.

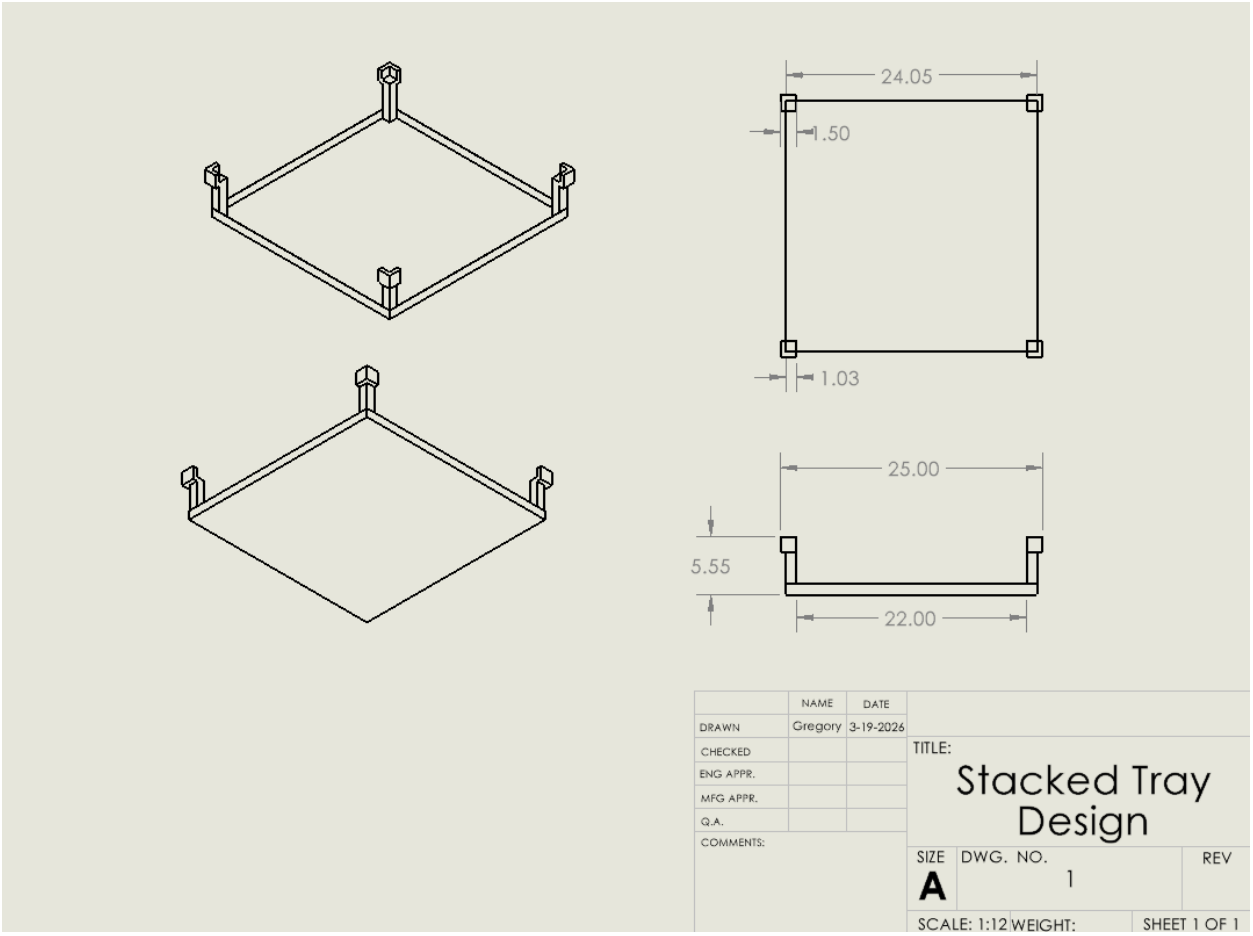

Figure 17 – SolidWorks Drawing of Stacked Tray Design for Manufacturing

Final Recommendation: I would recommend going with the stacked tray design to efficiently heat the cakes in about 20 minutes. This is due to the relatively simple design idea shown above as well as the ease in manufacturing them in bulk. SolidWorks images of the stacked trays can be seen below in **Figure 18**.

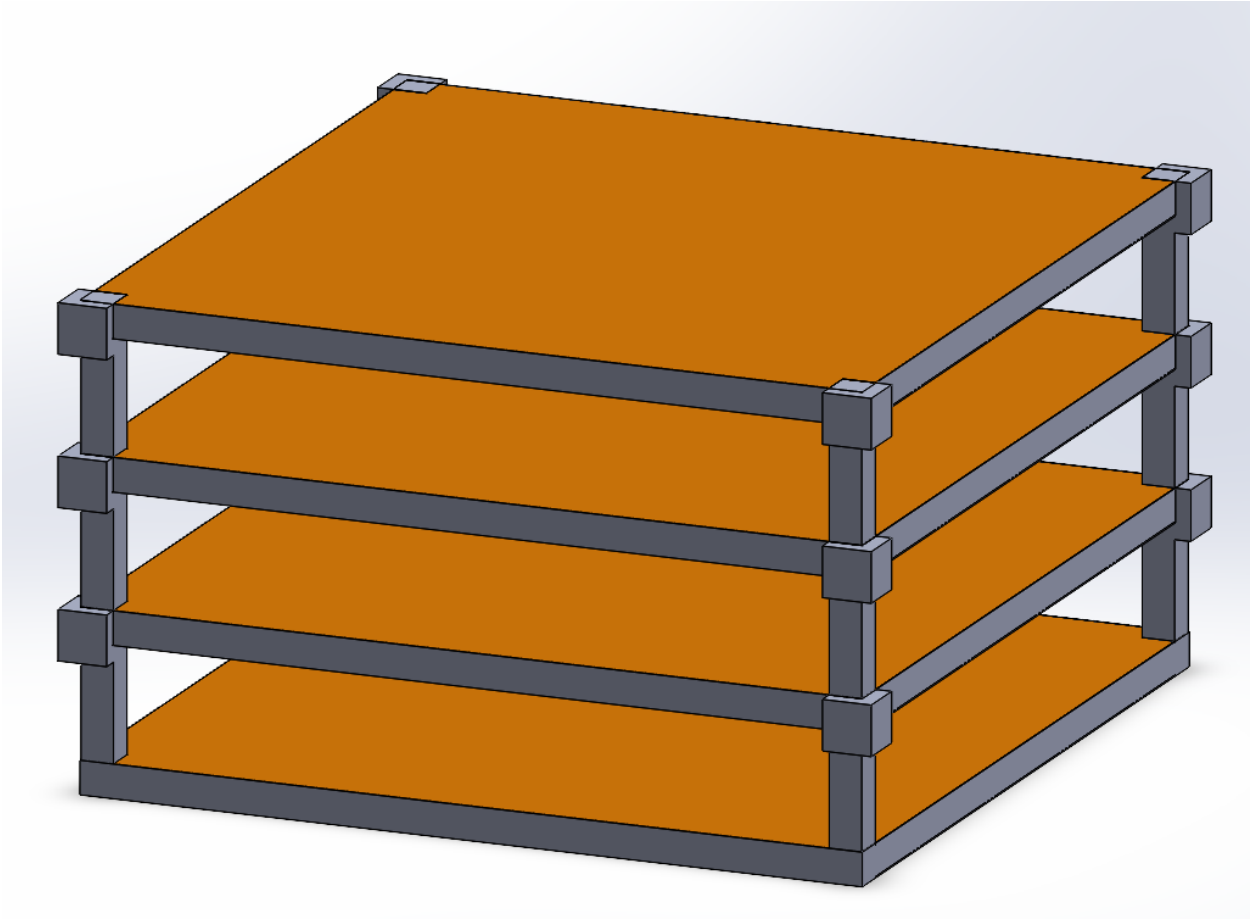

Figure 18 – SolidWorks Stacked Tray Design