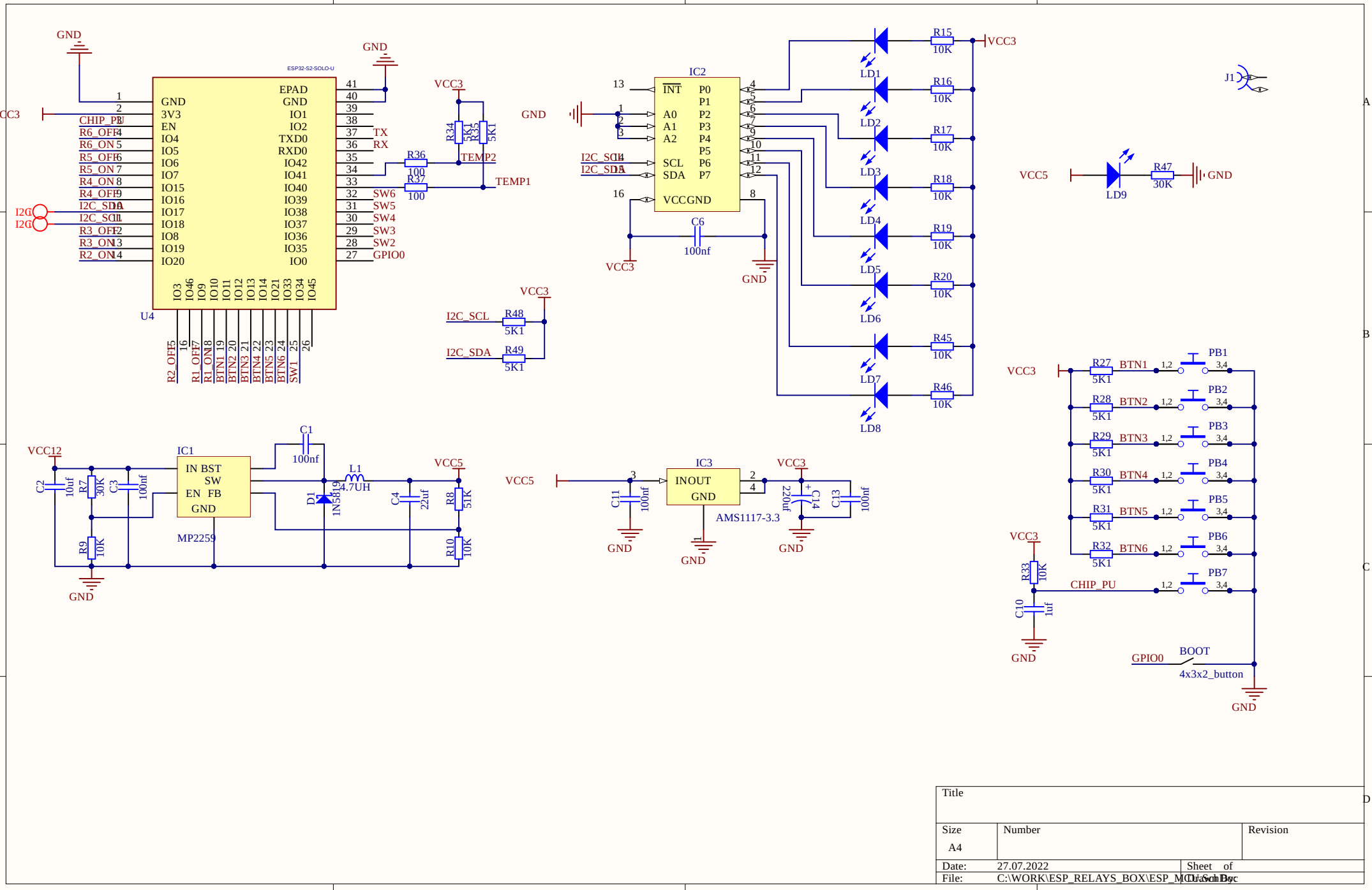
ESP32-S2-SOLO-U
U4
GND
3V3
EN
IO4
IO5
IO6
IO7
IO15
IO16
IO17
IO18
IO8
IO19
IO20
EPAD
IO1
IO2
TXD0
RXD0
IO42
IO41
IO40
IO39
IO38
IO37
IO36
IO35
IO0
IO3
IO46
IO9
IO10
IO11
IO12
IO13
IO14
IO21
IO33
IO34
IO45
CHIP_PU
R6_OFF
R6_ON
R5_OFF
R5_ON
R4_ON
R4_OFF
I2C_SDA
I2C_SCL
R3_OFF
R3_ON
R2_ON
R2_OFF
R1_OFF
R1_ON
BTN1
BTN2
BTN3
BTN4
BTN5
BTN6
SW1
TX
RX
SW6
SW5
SW4
SW3
SW2
GPIO0
VCC3
R36 100
R37 100
TEMP2
TEMP1
R34 5K1
R35 5K1
R48 5K1
R49 5K1
IC2
INT
A0
A1
A2
SCL
SDA
P0
P1
P2
P3
P4
P5
P6
P7
VCC
GND
C6 100nf
R15 10K
R16 10K
R17 10K
R18 10K
R19 10K
R20 10K
R45 10K
R46 10K
LD1
LD2
LD3
LD4
LD5
LD6
LD7
LD8
J1
VCC5
LD9
R47 30K
VCC12
IC1
IN BST
SW
EN FB
GND
MP2259
C2 10uf
R7 30K
C3 100nf
R9 10K
C1 100nf
L1 4.7UH
D1 1N5819
C4 22uf
R8 51K
R10 10K
IC3
INOUT
GND
AMS1117-3.3
C11 100nf
C14 220uf
C13 100nf
R27 5K1
R28 5K1
R29 5K1
R30 5K1
R31 5K1
R32 5K1
BTN1
BTN2
BTN3
BTN4
BTN5
BTN6
PB1
PB2
PB3
PB4
PB5
PB6
PB7
R33 10K
C10 1uf
CHIP_PU
GPIO0
BOOT
4x3x2_button
Title
Size
A4
Number
Revision
Date: 27.07.2022
Sheet of
File: C:\WORK\ESP_RELAYS_BOX\ESP_MOD.Sch
Drawn By:

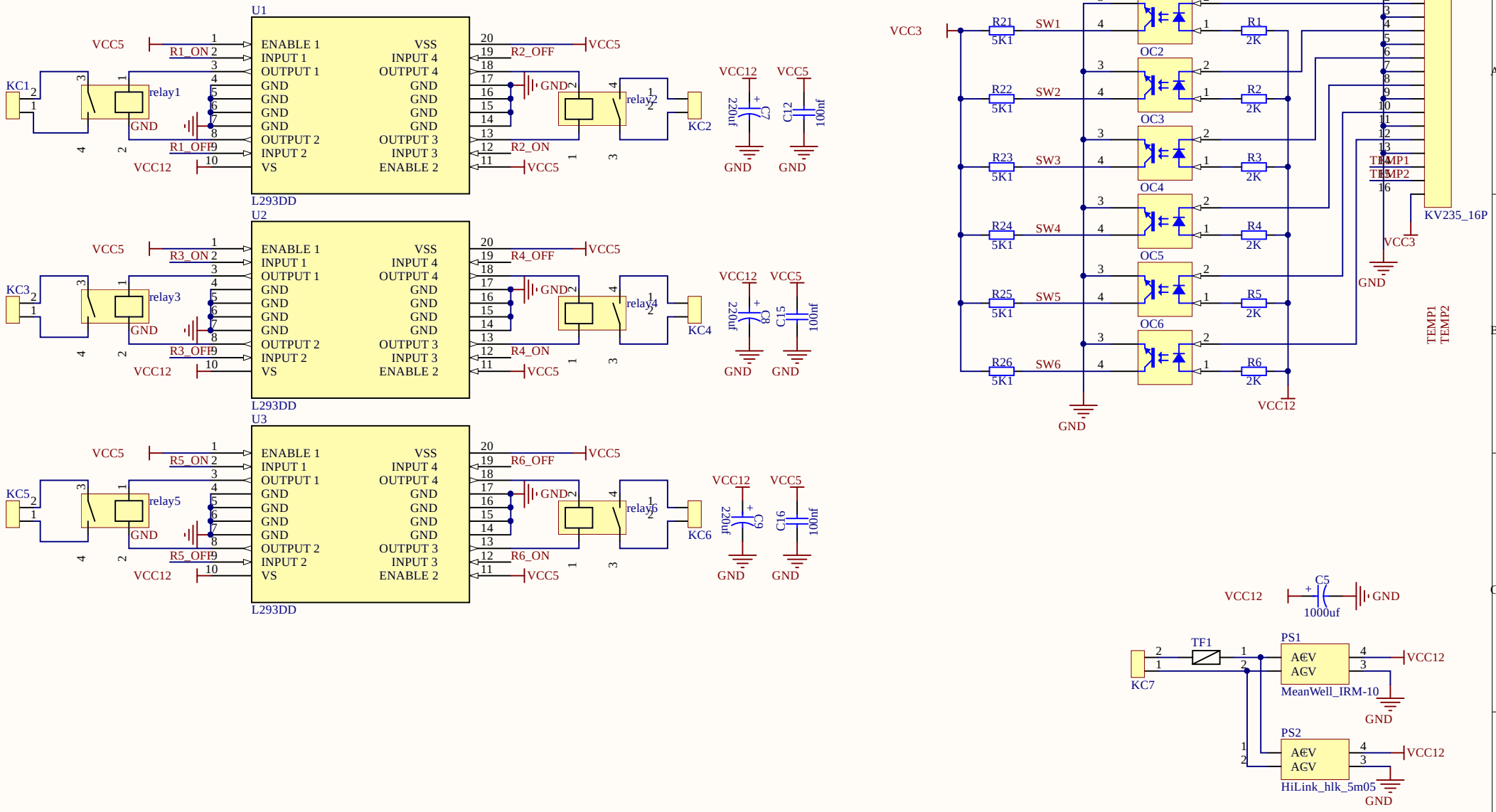

Title		
Size A4	Number	Revision
Date: 27.07.2022		Sheet of
File: C:\WORK\..\ESP_RELAYS_BOX_6CH_DATCHIK.SchDoc		

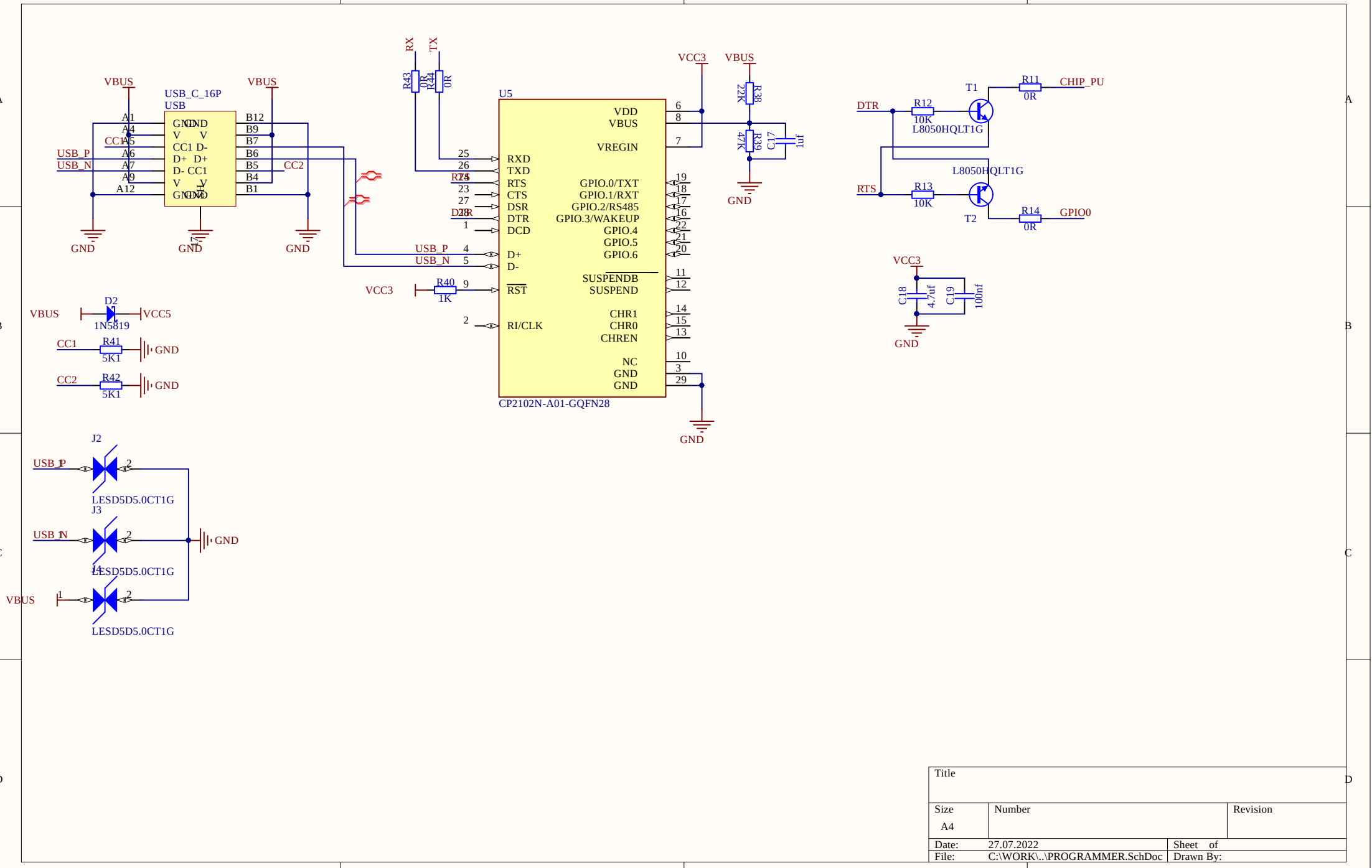

Title		
Size A4	Number	Revision
Date: 27.07.2022	Sheet of	
File: C:\WORK\..\PROGRAMMER.SchDoc	Drawn By:	