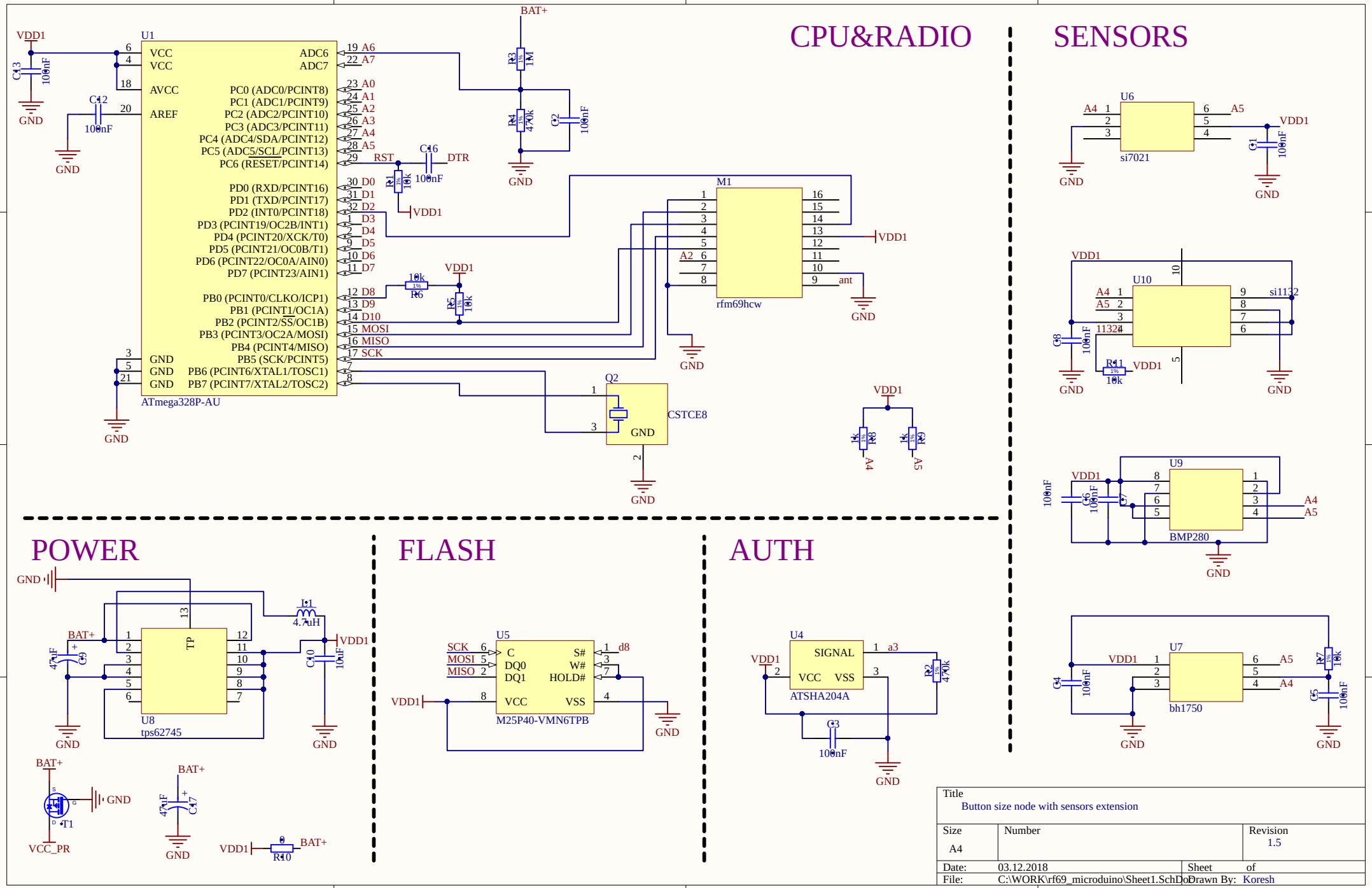
CPU&RADIO
SENSORS
POWER
FLASH
AUTH
U1
ATmega328P-AU
VCC
AVCC
AREF
GND
ADC6
ADC7
PC0 (ADC0/PCINT8)
PC1 (ADC1/PCINT9)
PC2 (ADC2/PCINT10)
PC3 (ADC3/PCINT11)
PC4 (ADC4/SDA/PCINT12)
PC5 (ADC5/SCL/PCINT13)
PC6 (RESET/PCINT14)
PD0 (RXD/PCINT16)
PD1 (TXD/PCINT17)
PD2 (INT0/PCINT18)
PD3 (PCINT19/OC2B/INT1)
PD4 (PCINT20/XCK/T0)
PD5 (PCINT21/OC0B/T1)
PD6 (PCINT22/OC0A/AIN0)
PD7 (PCINT23/AIN1)
PB0 (PCINT0/CLKO/ICP1)
PB1 (PCINT1/OC1A)
PB2 (PCINT2/SS/OC1B)
PB3 (PCINT3/OC2A/MOSI)
PB4 (PCINT4/MISO)
PB5 (SCK/PCINT5)
PB6 (PCINT6/XTAL1/TOSC1)
PB7 (PCINT7/XTAL2/TOSC2)
M1
rfm69hcw
ant
Q2
CSTCE8
U6
si7021
U10
si1132
U9
BMP280
U7
bh1750
U8
tps62745
TP
U5
M25P40-VMN6TPB
U4
ATSHA204A
SIGNAL
VCC
VSS
BAT+
VDD1
VCC_PR
T1
Title
Button size node with sensors extension
Size
A4
Number
Revision
1.5
Date: 03.12.2018
Sheet of
File: C:\WORK\rf69_microduino\Sheet1.SchDoc
Drawn By: Koresh