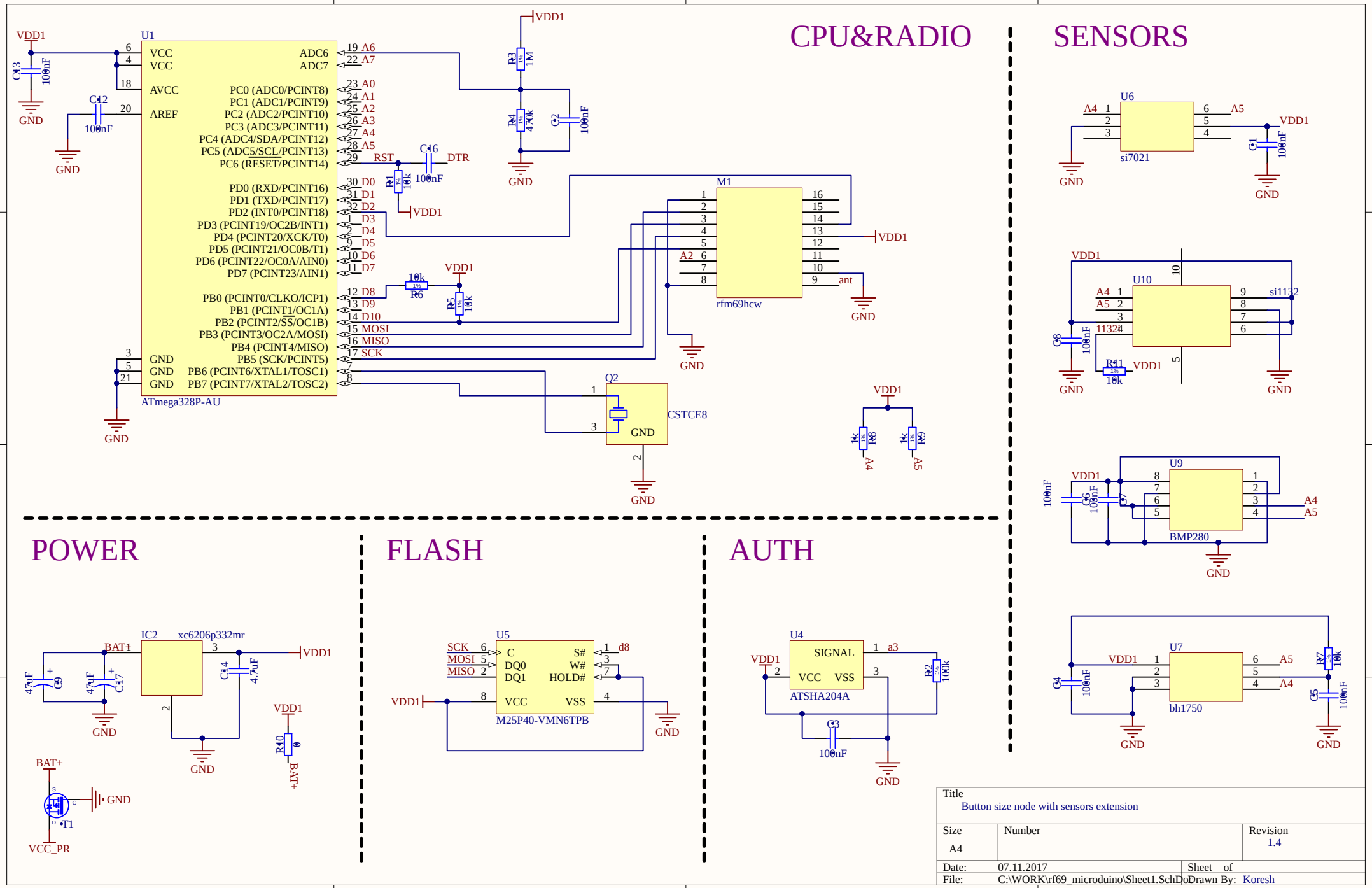
CPU&RADIO
SENSORS
POWER
FLASH
AUTH
U1
ATmega328P-AU
M1
rfm69hcw
Q2
CSTCE8
U6
si7021
U10
si1132
U9
BMP280
U7
bh1750
IC2
xc6206p332mr
U5
M25P40-VMN6TPB
U4
ATSHA204A
T1
VCC_PR
VDD1
GND
BAT+
RST
DTR
Title
Button size node with sensors extension
Size
A4
Number
Revision
1.4
Date:
07.11.2017
Sheet of
File:
C:\WORK\rf69_microduino\Sheet1.SchDoc
Drawn By:
Koresh