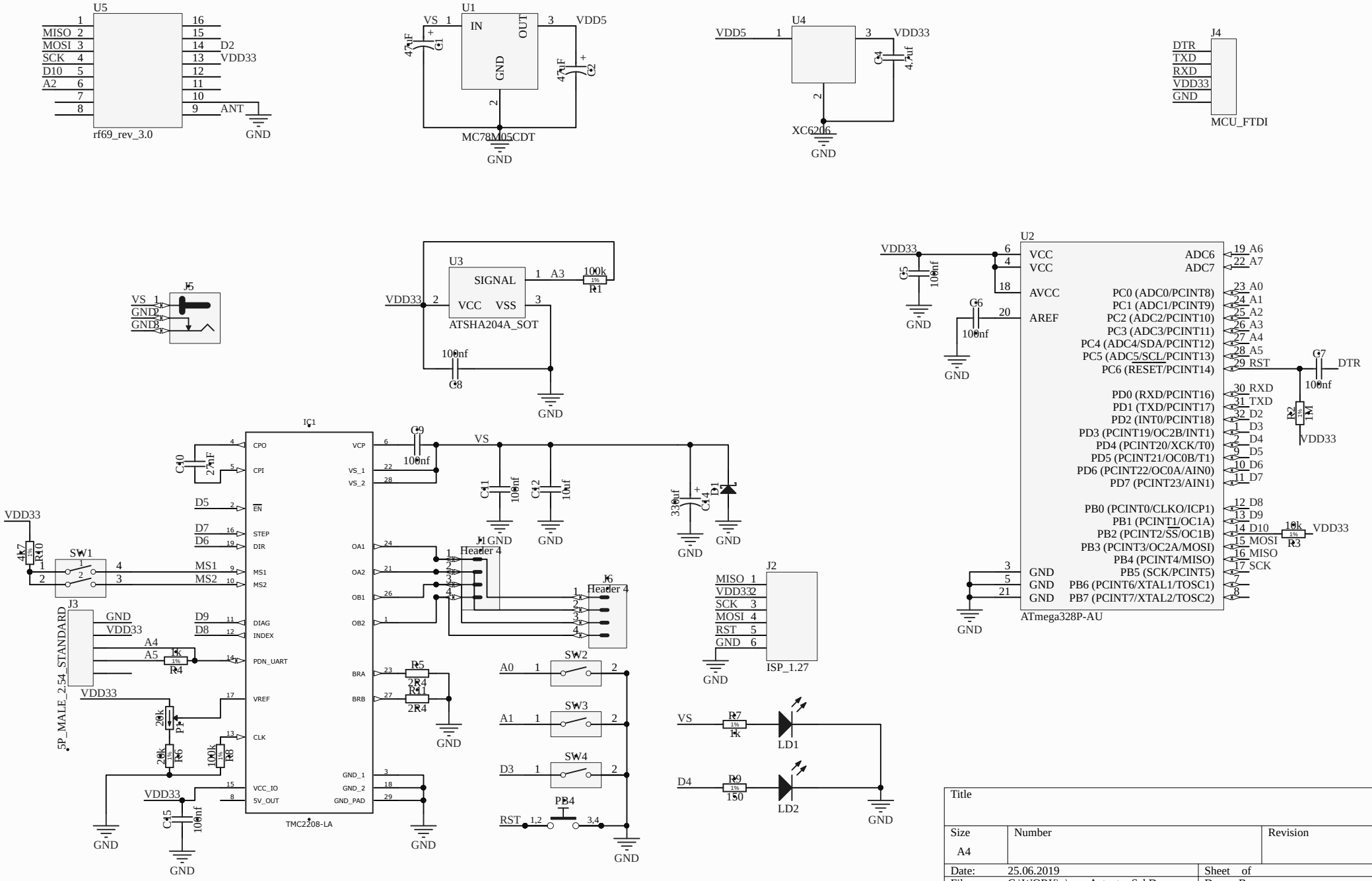

Title		
Size A4	Number	Revision
Date: 25.06.2019		Sheet of
File: C:\WORK\..\easyActuator.SchDoc		Drawn By: