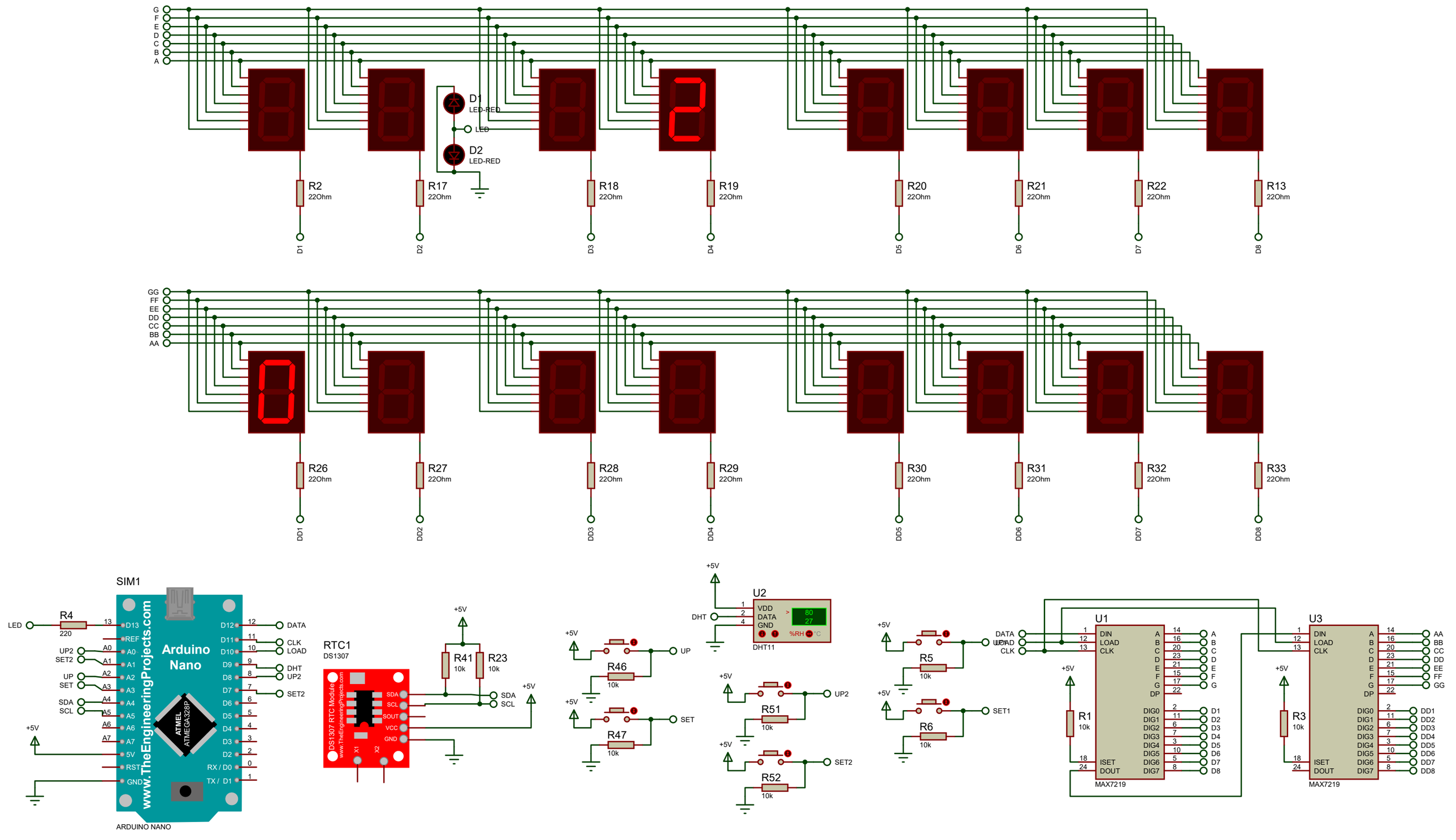
G
F
E
D
C
B
A
D1
LED-RED
LED
D2
LED-RED
R2
22Ohm
R17
22Ohm
R18
22Ohm
R19
22Ohm
R20
22Ohm
R21
22Ohm
R22
22Ohm
R13
22Ohm
D1
D2
D3
D4
D5
D6
D7
D8
GG
FF
EE
DD
CC
BB
AA
R26
22Ohm
R27
22Ohm
R28
22Ohm
R29
22Ohm
R30
22Ohm
R31
22Ohm
R32
22Ohm
R33
22Ohm
DD1
DD2
DD3
DD4
DD5
DD6
DD7
DD8
SIM1
LED
R4
220
UP2
SET2
UP
SET
SDA
SCL
+5V
Arduino
Nano
www.TheEngineeringProjects.com
ATMEL
ATMEGA328P
DATA
CLK
LOAD
DHT
UP2
SET2
ARDUINO NANO
RTC1
DS1307
DS1307 RTC Module
www.TheEngineeringProjects.com
SDA
SCL
SOUT
VCC
GND
X1
X2
R41
10k
R23
10k
UP
R46
10k
SET
R47
10k
U2
VDD
DATA
GND
80
27
%RH
°C
DHT11
DHT
UP2
R51
10k
SET2
R52
10k
R5
10k
SET1
R6
10k
U1
DIN
LOAD
CLK
ISET
DOUT
MAX7219
R1
10k
U3
R3
10k