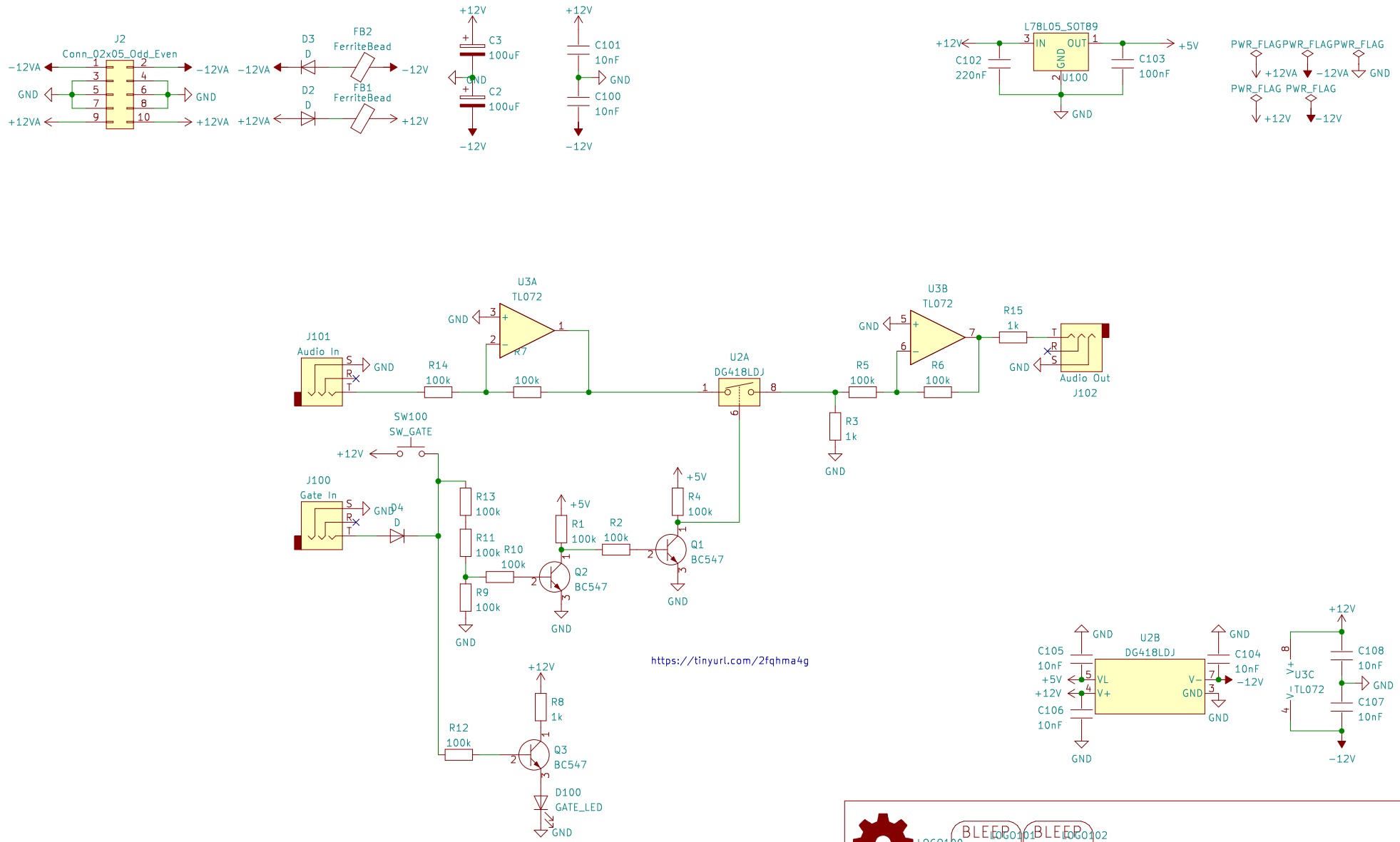

Sheet: /
File: analog_switch_v1.kicad_sch

Title: Analog Switch Module

Size: A4	Date: 2022-10-08	Rev: 1.0
KiCad E.D.A. eeschema (6.0.0)		Id: 1/1

This work is licensed under a Creative Commons Attribution-NonCommercial-ShareAlike 4.0 International License.
https://creativecommons.org/licenses/by-nc-sa/4.0/