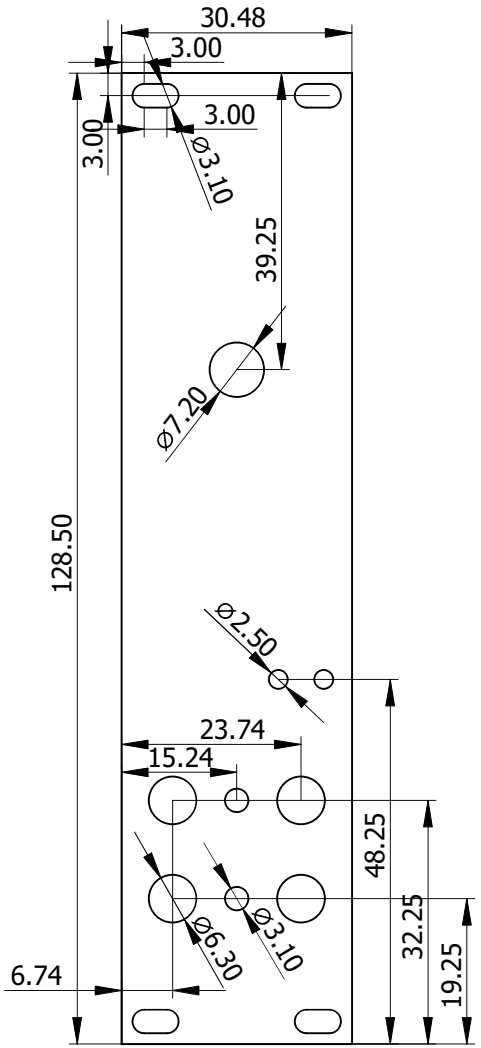

DESIGNED BY: RobotDialogs DATE: 2022-10-11	VC Comparator Front Panel		
SIZE A4			
SCALE 1.0	WEIGHT (kg) -	DRAWING NUMBER 1	SHEET 1

This work is licensed under a Creative Commons Attribution-ShareAlike 4.0 International License.