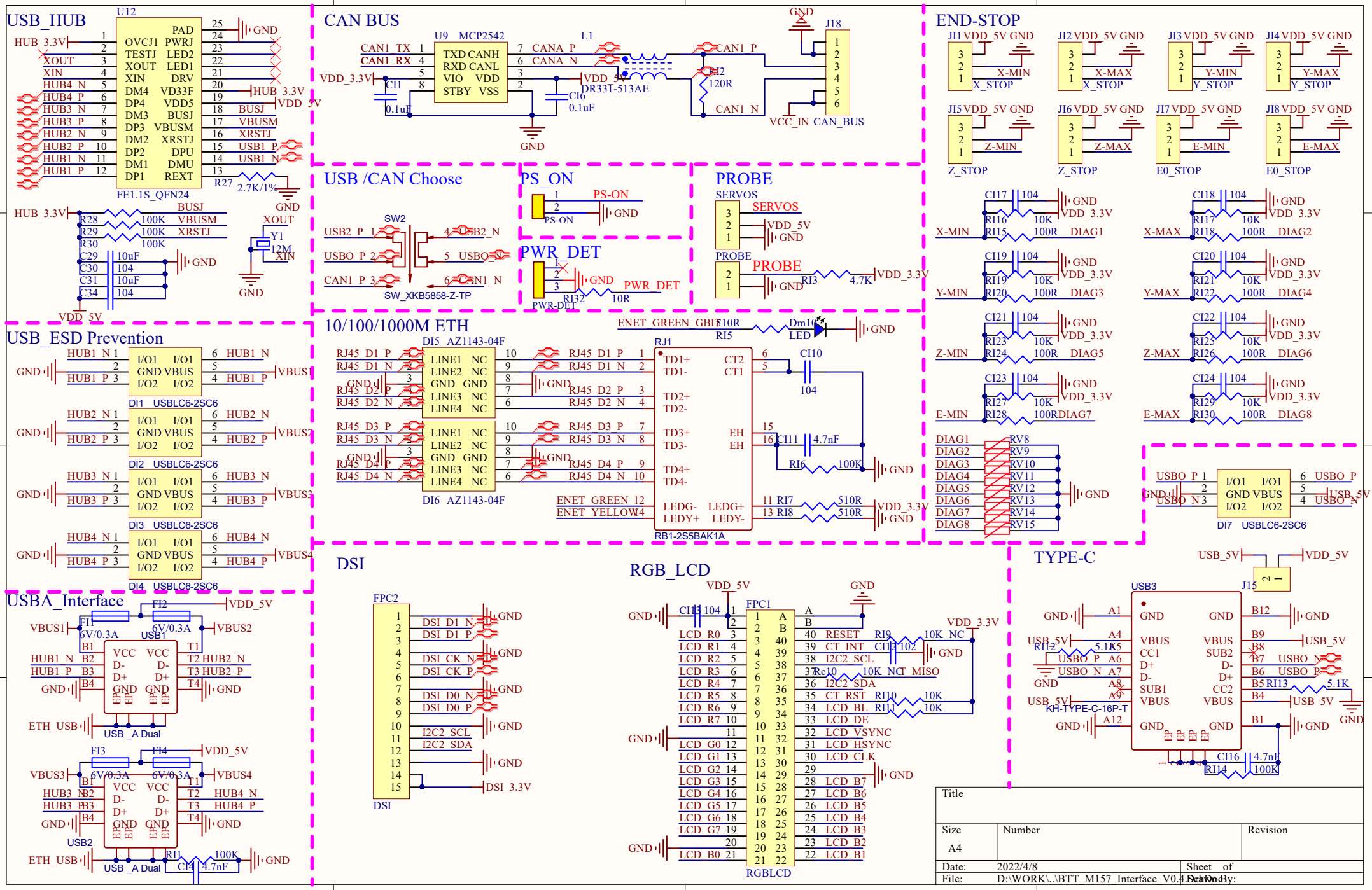
USB_HUB
U12
FE1.1S_QFN24
CAN BUS
U9 MCP2542
DR33T-513AE
J18
END-STOP
USB /CAN Choose
SW2
SW_XKB5858-Z-TP
PS_ON
PWR_DET
PROBE
10/100/1000M ETH
DI5 AZ1143-04F
DI6 AZ1143-04F
RJ1
RB1-2S5BAK1A
USB_ESD Prevention
DI1 USBLC6-2SC6
DI2 USBLC6-2SC6
DI3 USBLC6-2SC6
DI4 USBLC6-2SC6
DI7 USBLC6-2SC6
USBA_Interface
USB _A Dual
DSI
FPC2
RGB_LCD
FPC1
RGBLCD
TYPE-C
USB3
KH-TYPE-C-16P-T
Title
Size
A4
Number
Revision
Date: 2022/4/8
File: D:\WORK\..\BTT_M157_Interface_V0.4.SchDoc
Sheet of
Drawn By:

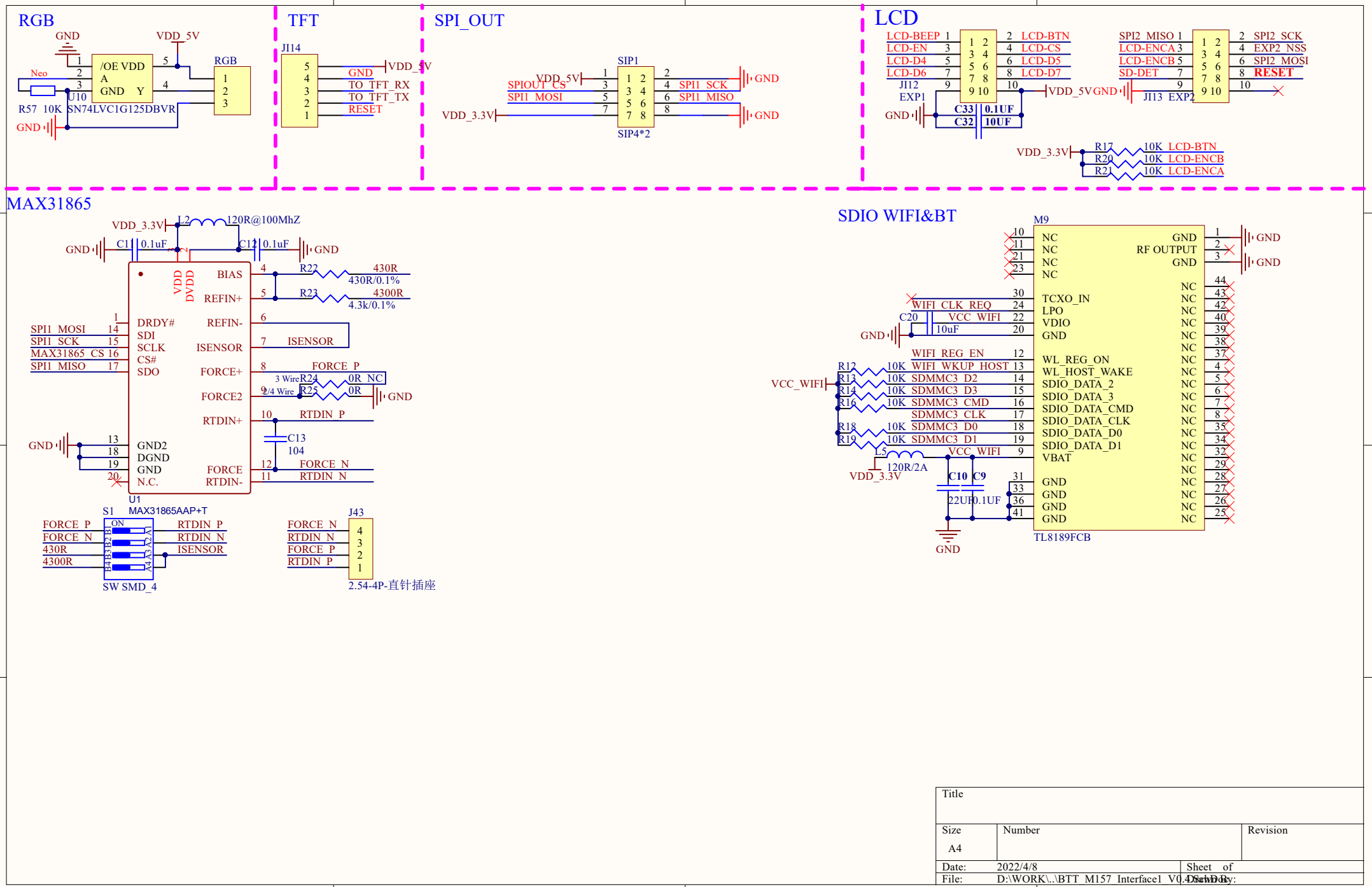

Title		
Size A4	Number	Revision
Date: 2022/4/8	Sheet of	
File: D:\WORK\..\BTT_M157_Interface1_V0.4.SchDoc	Drawn By:	

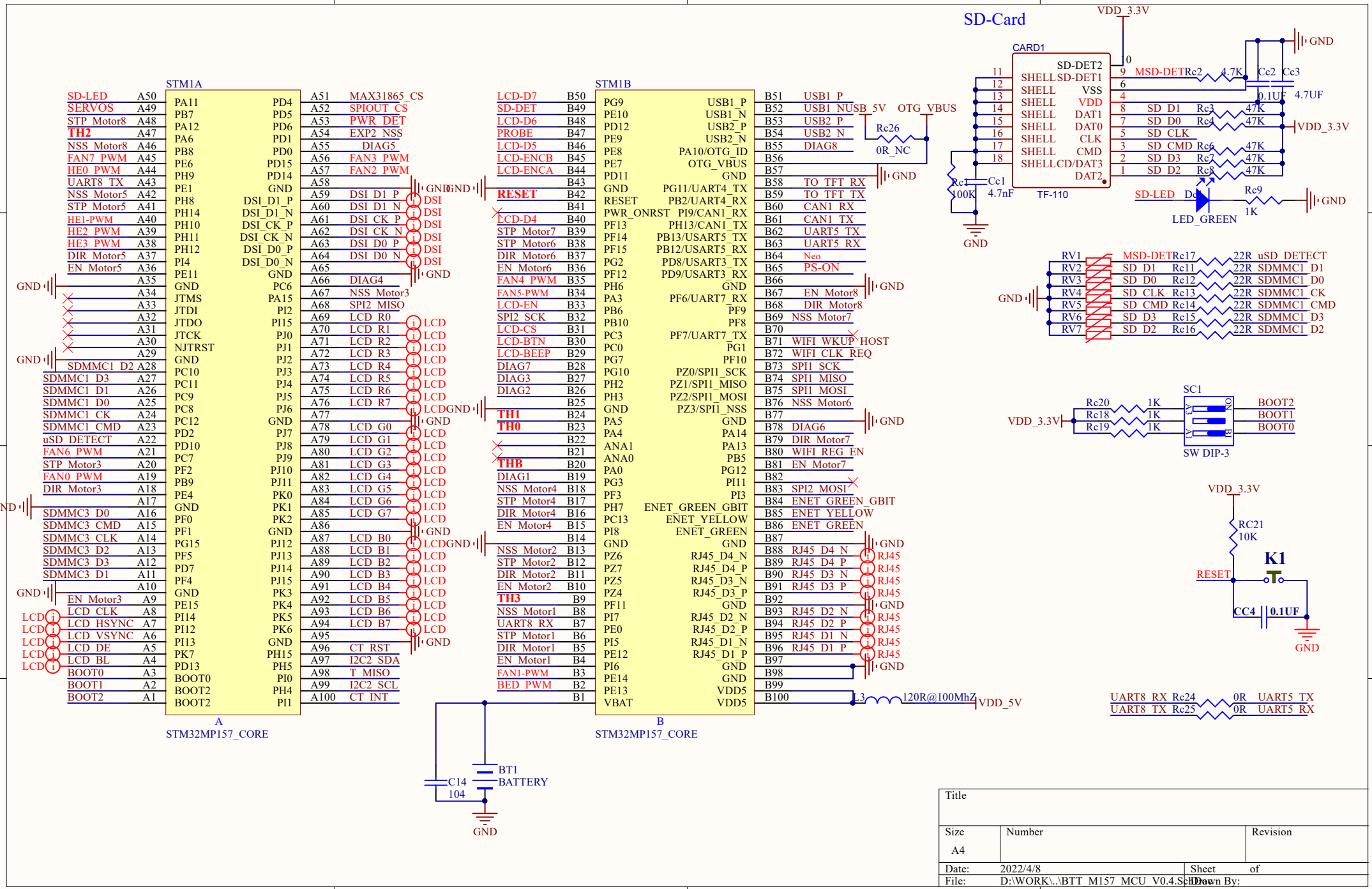

Title		
Size A4	Number	Revision
Date: 2022/4/8		Sheet of
File: D:\WORK\..\BTT_M157_MCU_V0.4.SchDoc		Drawn By:

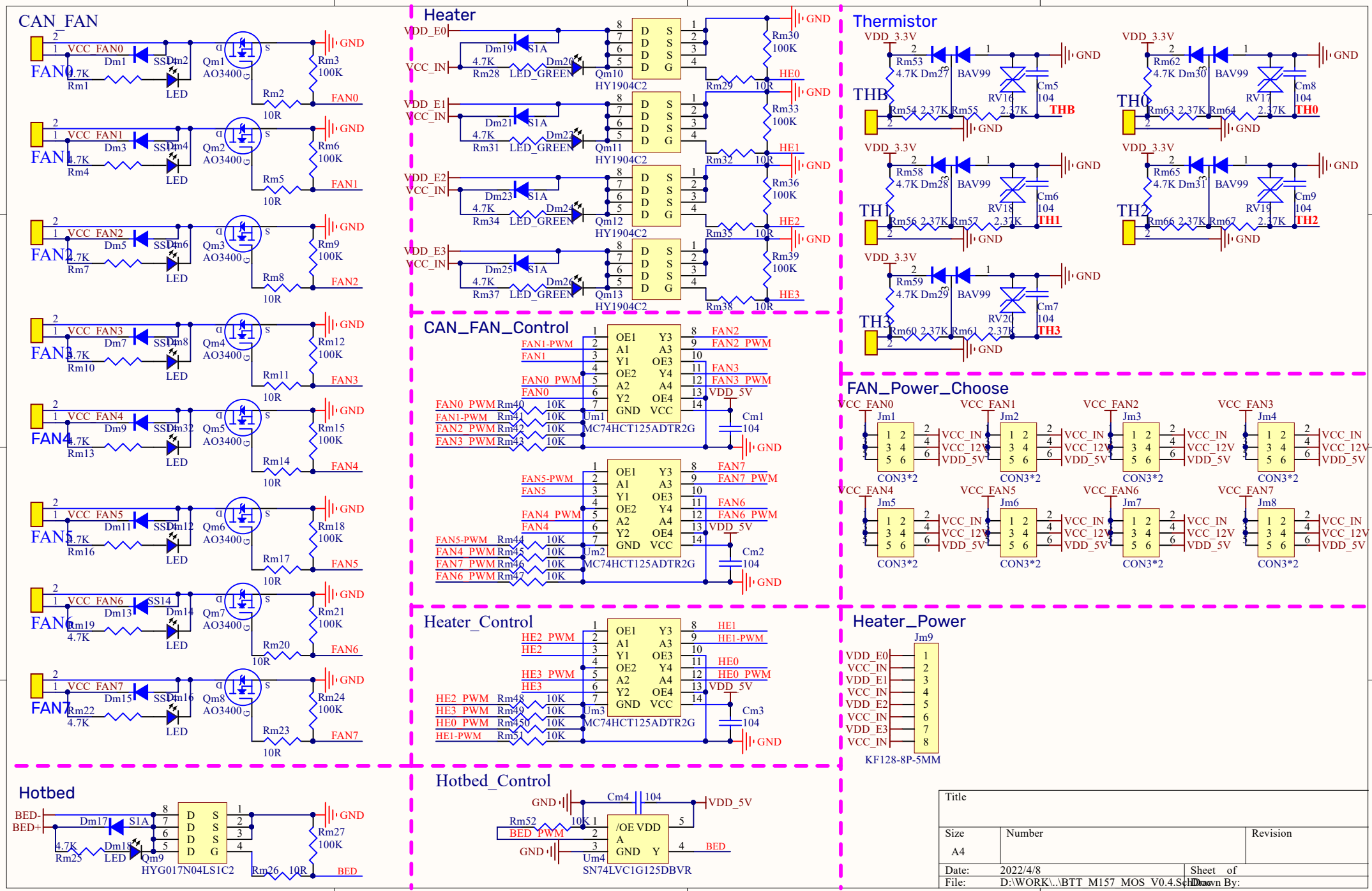
CAN_FAN
FAN0
FAN1
FAN2
FAN3
FAN4
FAN5
FAN6
FAN7
VCC_FAN0
VCC_FAN1
VCC_FAN2
VCC_FAN3
VCC_FAN4
VCC_FAN5
VCC_FAN6
VCC_FAN7
Dm1
Dm2
Dm3
Dm4
Dm5
Dm6
Dm7
Dm8
Dm9
Dm10
Dm11
Dm12
Dm13
Dm14
Dm15
Dm16
Rm1
Rm2
Rm3
Rm4
Rm5
Rm6
Rm7
Rm8
Rm9
Rm10
Rm11
Rm12
Rm13
Rm14
Rm15
Rm16
Rm17
Rm18
Rm19
Rm20
Rm21
Rm22
Rm23
Rm24
Qm1
Qm2
Qm3
Qm4
Qm5
Qm6
Qm7
Qm8
AO3400
LED
4.7K
10R
100K
GND
Heater
VDD_E0
VCC_IN
VDD_E1
VDD_E2
VDD_E3
Dm19
Dm20
Dm21
Dm22
Dm23
Dm24
Dm25
Dm26
Rm28
Rm31
Rm34
Rm37
LED_GREEN
Qm10
Qm11
Qm12
Qm13
HY1904C2
Rm29
Rm32
Rm35
Rm38
Rm30
Rm33
Rm36
Rm39
HE0
HE1
HE2
HE3
Thermistor
VDD_3.3V
THB
TH0
TH1
TH2
TH3
Rm53
Rm54
Rm55
Rm62
Rm63
Rm64
Rm58
Rm56
Rm57
Rm65
Rm66
Rm67
Rm59
Rm60
Rm61
Dm27
Dm30
Dm28
Dm31
Dm29
BAV99
RV16
RV17
RV18
RV19
RV20
Cm5
Cm6
Cm7
Cm8
Cm9
104
2.37K
CAN_FAN_Control
FAN1-PWM
FAN1
FAN0_PWM
FAN0
FAN2_PWM
FAN3_PWM
FAN5-PWM
FAN5
FAN4_PWM
FAN4
FAN7_PWM
FAN6_PWM
FAN2
FAN3
FAN7
FAN6
VDD_5V
Rm40
Rm41
Rm42
Rm43
Rm44
Rm45
Rm46
Rm47
10K
Um1
Um2
Um3
Um4
MC74HCT125ADTR2G
OE1
A1
Y1
OE2
A2
Y2
GND
Y3
A3
OE3
Y4
A4
OE4
VCC
Cm1
Cm2
Cm3
FAN_Power_Choose
Jm1
Jm2
Jm3
Jm4
Jm5
Jm6
Jm7
Jm8
VCC_IN
VCC_12V
VDD_5V
CON3*2
Heater_Control
HE2_PWM
HE2
HE3_PWM
HE3
HE0_PWM
HE1-PWM
HE1
HE0
Rm48
Rm49
Rm50
Rm51
Heater_Power
Jm9
KF128-8P-5MM
Hotbed
BED-
BED+
Dm17
Dm18
Qm9
HYG017N04LS1C2
Rm25
Rm26
Rm27
BED
Hotbed_Control
Cm4
/OE
VDD
SN74LVC1G125DBVR
Title
Size
A4
Number
Revision
Date:
2022/4/8
Sheet of
File:
D:\WORK\..\BTT_M157_MOS_V0.4.SchDoc
Drawn By:

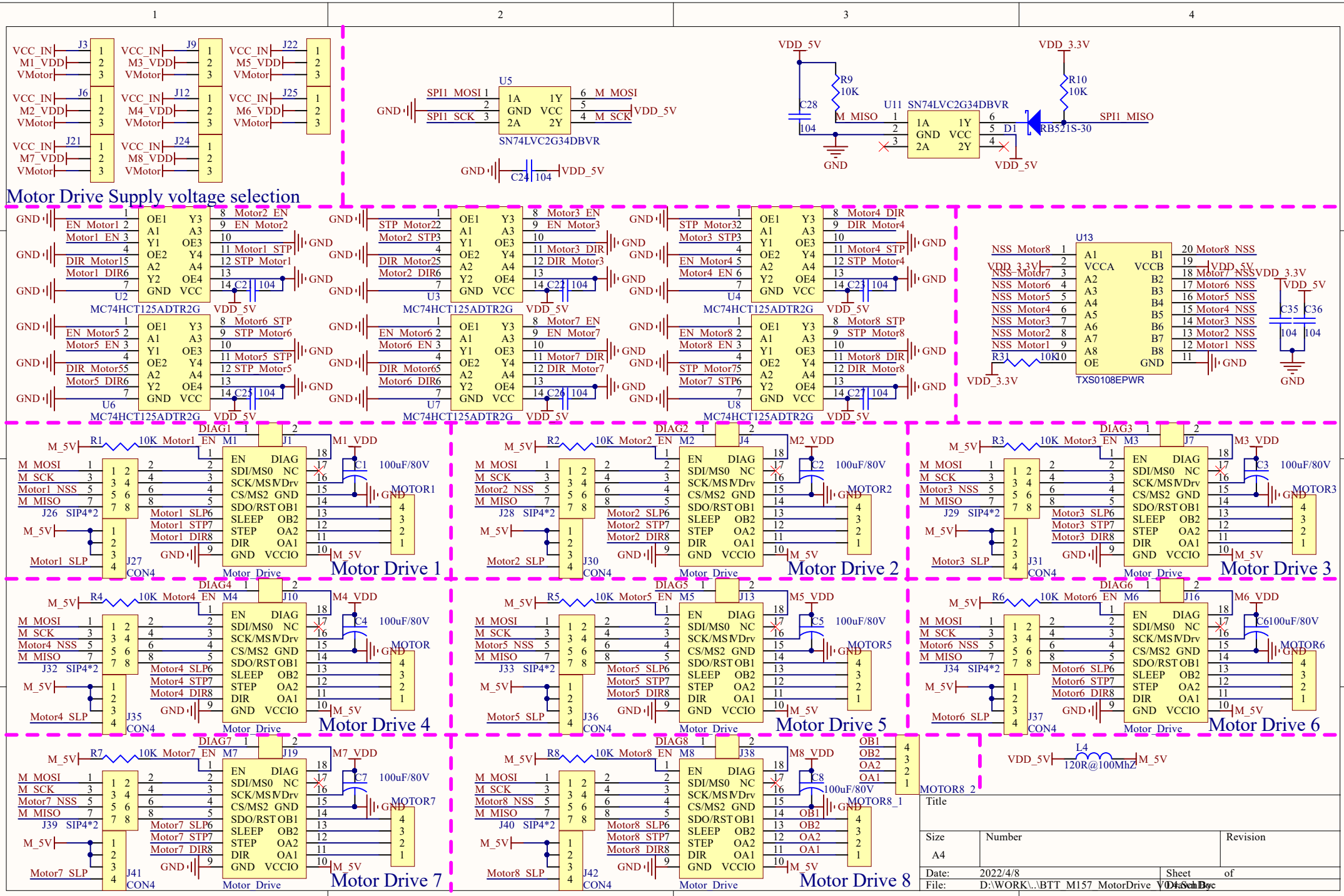
Motor Drive Supply voltage selection
U5
SN74LVC2G34DBVR
U11 SN74LVC2G34DBVR
RB521S-30
U2 MC74HCT125ADTR2G
U3 MC74HCT125ADTR2G
U4 MC74HCT125ADTR2G
U6 MC74HCT125ADTR2G
U7 MC74HCT125ADTR2G
U8 MC74HCT125ADTR2G
U13
TXS0108EPWR
Motor Drive 1
Motor Drive 2
Motor Drive 3
Motor Drive 4
Motor Drive 5
Motor Drive 6
Motor Drive 7
Motor Drive 8
Motor Drive
J26 SIP4*2
J28 SIP4*2
J29 SIP4*2
J32 SIP4*2
J33 SIP4*2
J34 SIP4*2
J39 SIP4*2
J40 SIP4*2
J27 CON4
J30 CON4
J31 CON4
J35 CON4
J36 CON4
J37 CON4
J41 CON4
J42 CON4
MOTOR1
MOTOR2
MOTOR3
MOTOR
MOTOR5
MOTOR6
MOTOR7
MOTOR8_1
MOTOR8_2
100uF/80V
L4
120R@100MhZ
Title
Size
A4
Number
Revision
Date: 2022/4/8
Sheet of
File: D:\WORK\..\BTT_M157_MotorDrive_V0.4.SchDoc

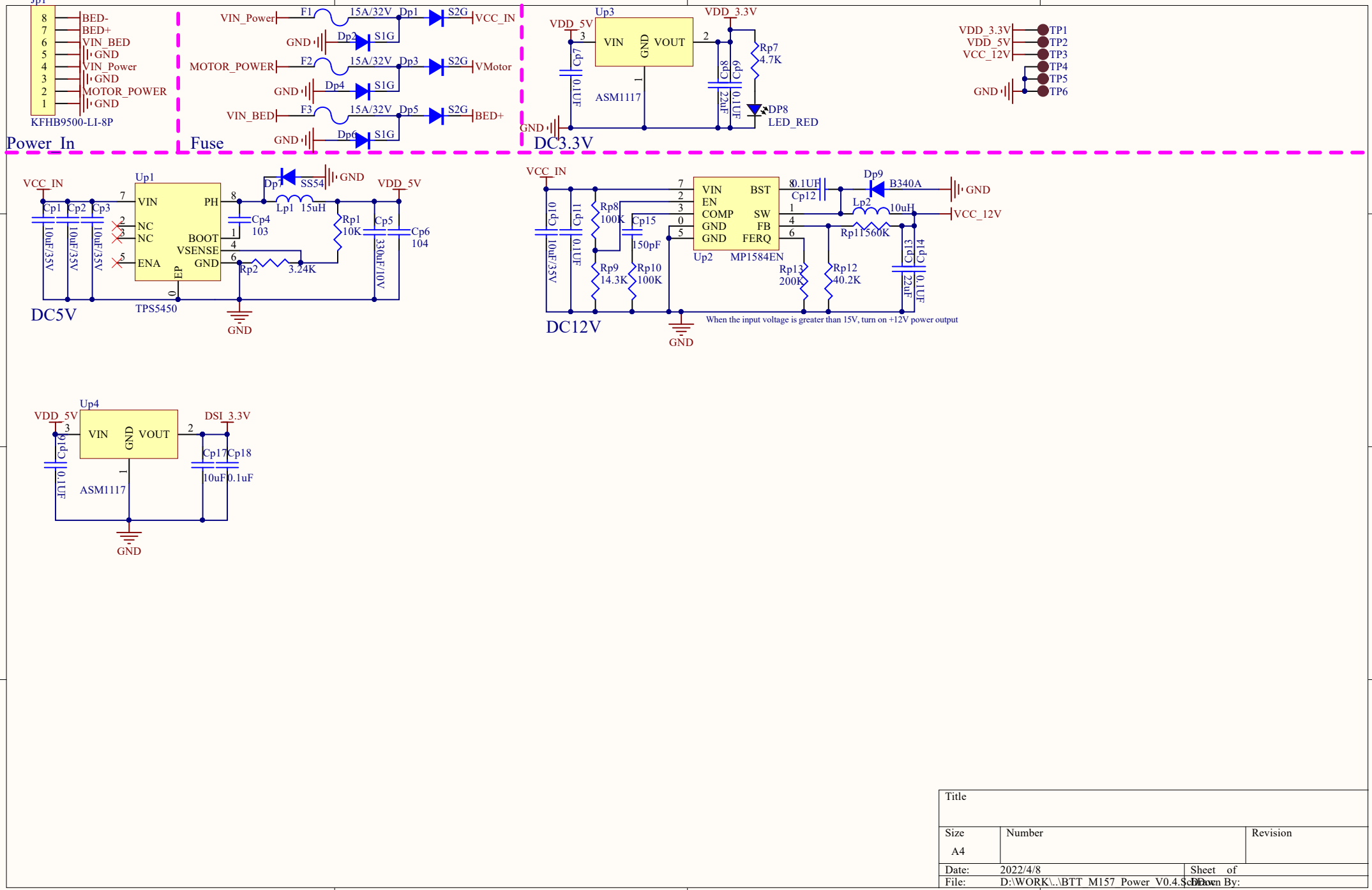

Title		
Size A4	Number	Revision
Date: 2022/4/8	Sheet of	
File: D:\WORK\..\BTT_M157_Power_V0.4.SchDoc	Drawn By:	

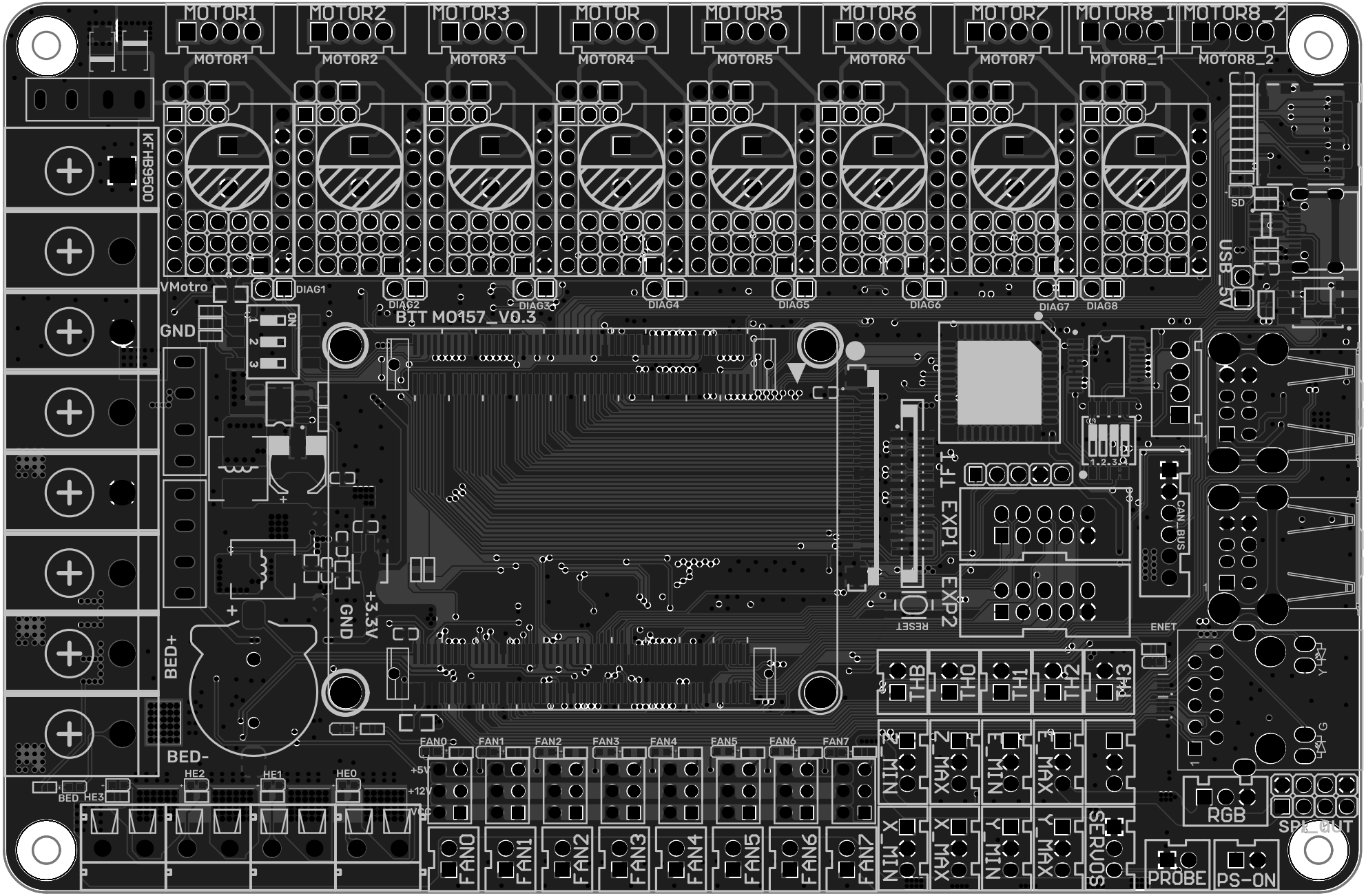
MOTOR1
MOTOR2
MOTOR3
MOTOR4
MOTOR5
MOTOR6
MOTOR7
MOTOR8_1
MOTOR8_2
KFHB9500
VMotro
GND
DIAG1
DIAG2
DIAG3
DIAG4
DIAG5
DIAG6
DIAG7
DIAG8
BTT MO157_V0.3
ON
1
2
3
SD
USB_5V
1.2.3.4
CAN_BUS
EXP1
EXP2
TF1
RESET
ENET
+3.3V
GND
BED+
BED-
BED
HE3
HE2
HE1
HE0
FAN0
FAN1
FAN2
FAN3
FAN4
FAN5
FAN6
FAN7
+5V
+12V
VCC
THB
TH0
TH1
TH2
TH3
X_MIN
X_MAX
Y_MIN
Y_MAX
Z_MIN
Z_MAX
E_MIN
E_MAX
SERVOS
RGB
SPI_OUT
PROBE
PS-ON
VIN
GND
VIN_BED
Power
+5V GND RX TX RST