B2BConnector

File: B2BConnector.kicad_sch

MainPower

File: MainPower.kicad_sch

Connectors

File: Connectors.kicad_sch

VectorNav VN-200

File: vectornav.kicad_sch

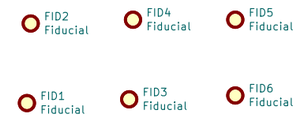

Echo MAV, LLC

Sheet: /

File: echopilot_ai_carrier.kicad_sch

Title: EchoPilot Carrier

Size: B	Date: 2021-03-23	**Rev: 2**
KiCad E.D.A. eeschema (6.0.11)		Id: 1/5

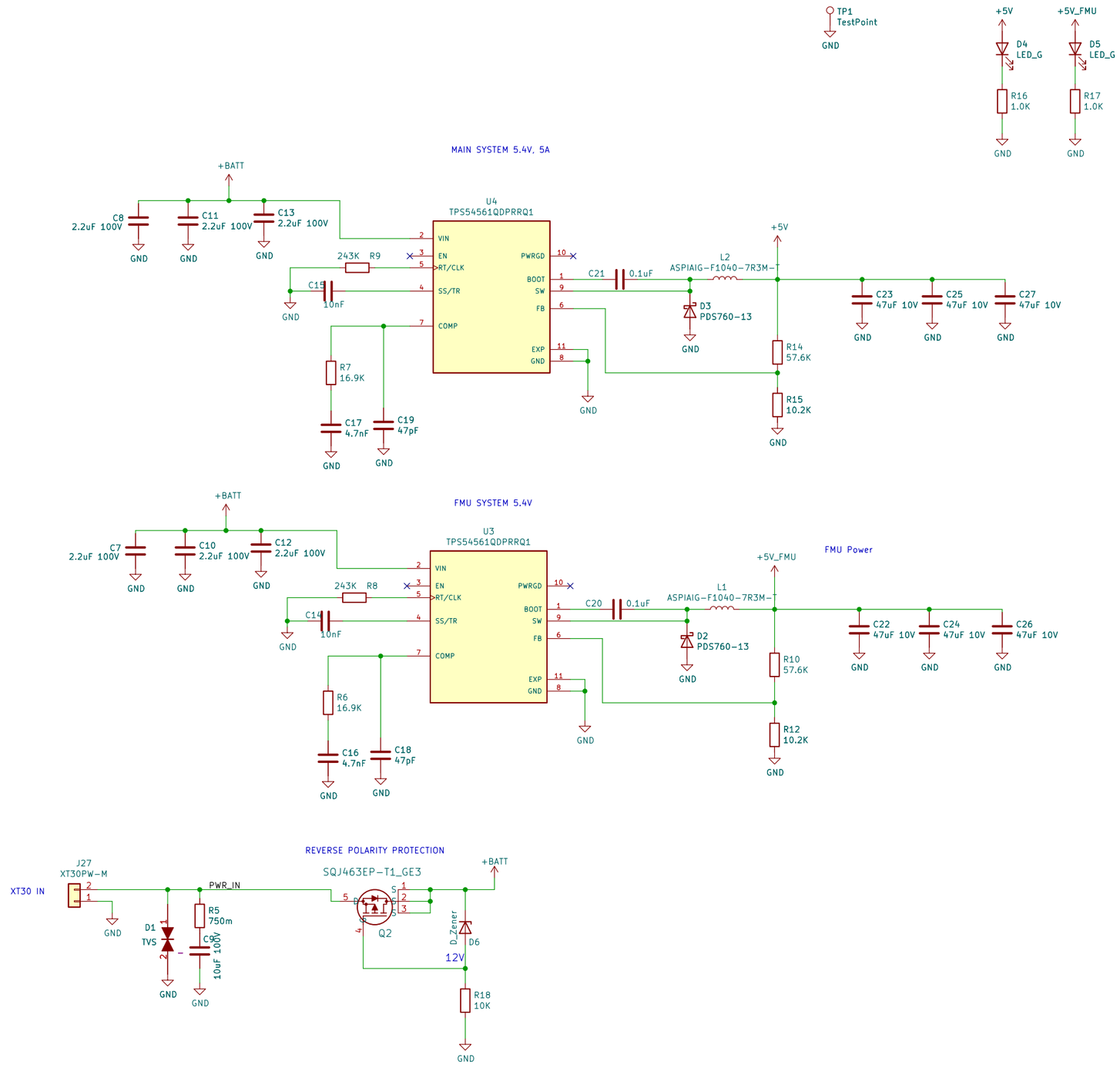

Echo MAV, LLC

Sheet: /MainPower/

File: MainPower.kicad_sch

Title: EchoPilot Carrier

Size: B	Date: 2021-03-23	Rev: 2
KiCad E.D.A. eeschema (6.0.11)		Id: 2/5

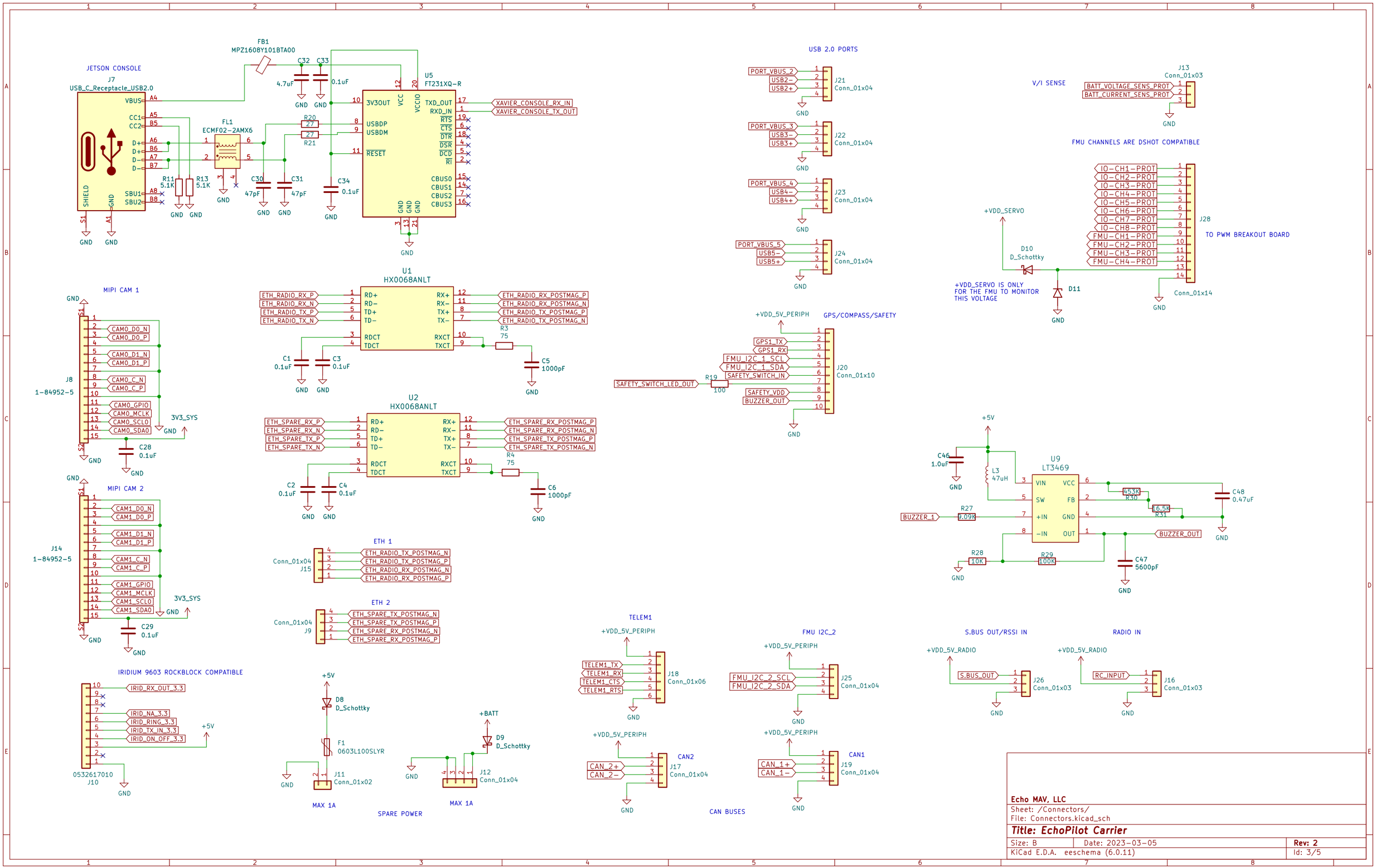

Echo MAV, LLC
Sheet: /Connectors/
File: Connectors.kicad_sch

Title: EchoPilot Carrier

Size: B	Date: 2023-03-05	Rev: 2
KiCad E.D.A. eeschema (6.0.11)		Id: 3/5

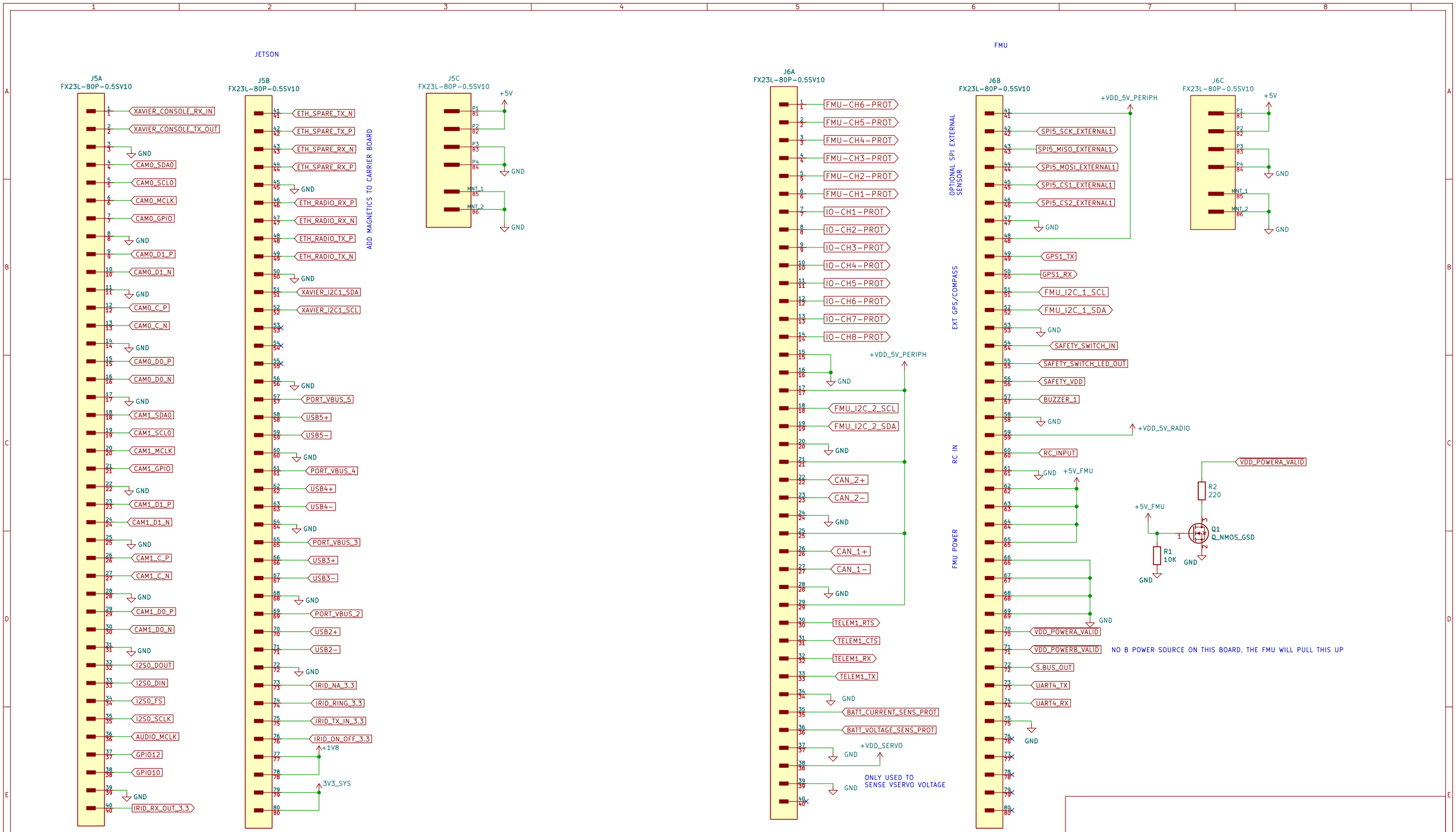

Echo MAV, LLC

Sheet: /B2BConnector/

File: B2BConnector.kicad_sch

Title: EchoPilot Carrier

Size: B	Date: 2021-03-23	**Rev: 2**
KiCad E.D.A. eeschema (6.0.11)		Id: 4/5

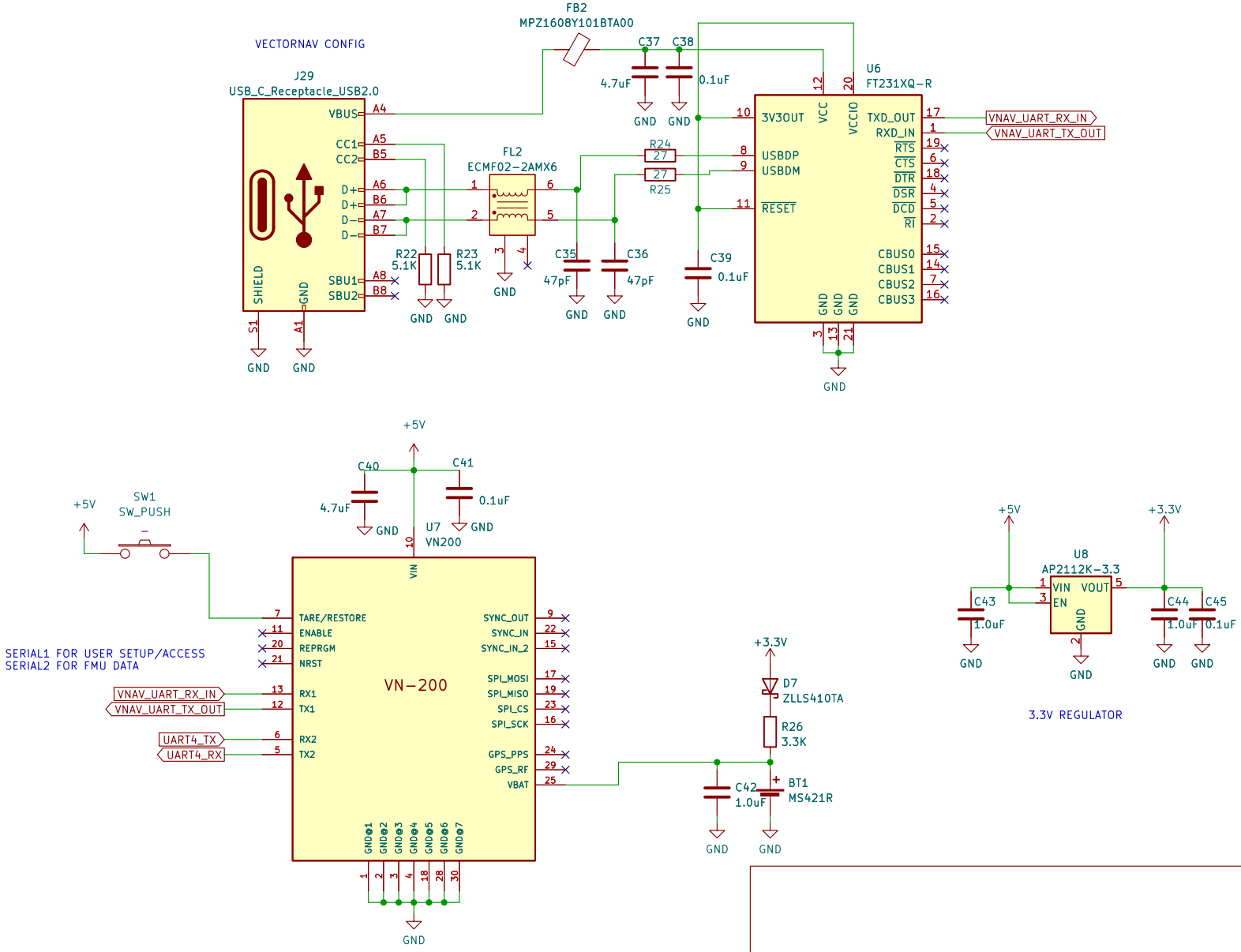

Sheet: /VectorNav VN−200/
File: vectornav.kicad_sch

Title:

Size: A4	Date:	Rev:
KiCad E.D.A. eeschema (6.0.11)		Id: 5/5