Advanced RNNs

Slides mostly from the Stanford NLP course by Prof. Chris Manning and others

1. The Simple RNN Language Model

$$\hat{\boldsymbol{y}}^{(4)} = P(\boldsymbol{x}^{(5)} | \text{the students opened their})$$

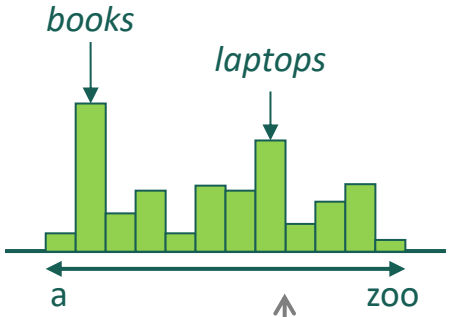

output distribution

$$\hat{\boldsymbol{y}}^{(t)} = \text{softmax}\left(\boldsymbol{U}\boldsymbol{h}^{(t)} + \boldsymbol{b}_2\right) \in \mathbb{R}^{|V|}$$

hidden states

$$\boldsymbol{h}^{(t)} = \sigma\left(\boldsymbol{W}_h\boldsymbol{h}^{(t-1)} + \boldsymbol{W}_e\boldsymbol{e}^{(t)} + \boldsymbol{b}_1\right)$$

$\boldsymbol{h}^{(0)}$ is the initial hidden state

word embeddings

$$\boldsymbol{e}^{(t)} = \boldsymbol{E}\boldsymbol{x}^{(t)}$$

words / one-hot vectors

$$\boldsymbol{x}^{(t)} \in \mathbb{R}^{|V|}$$

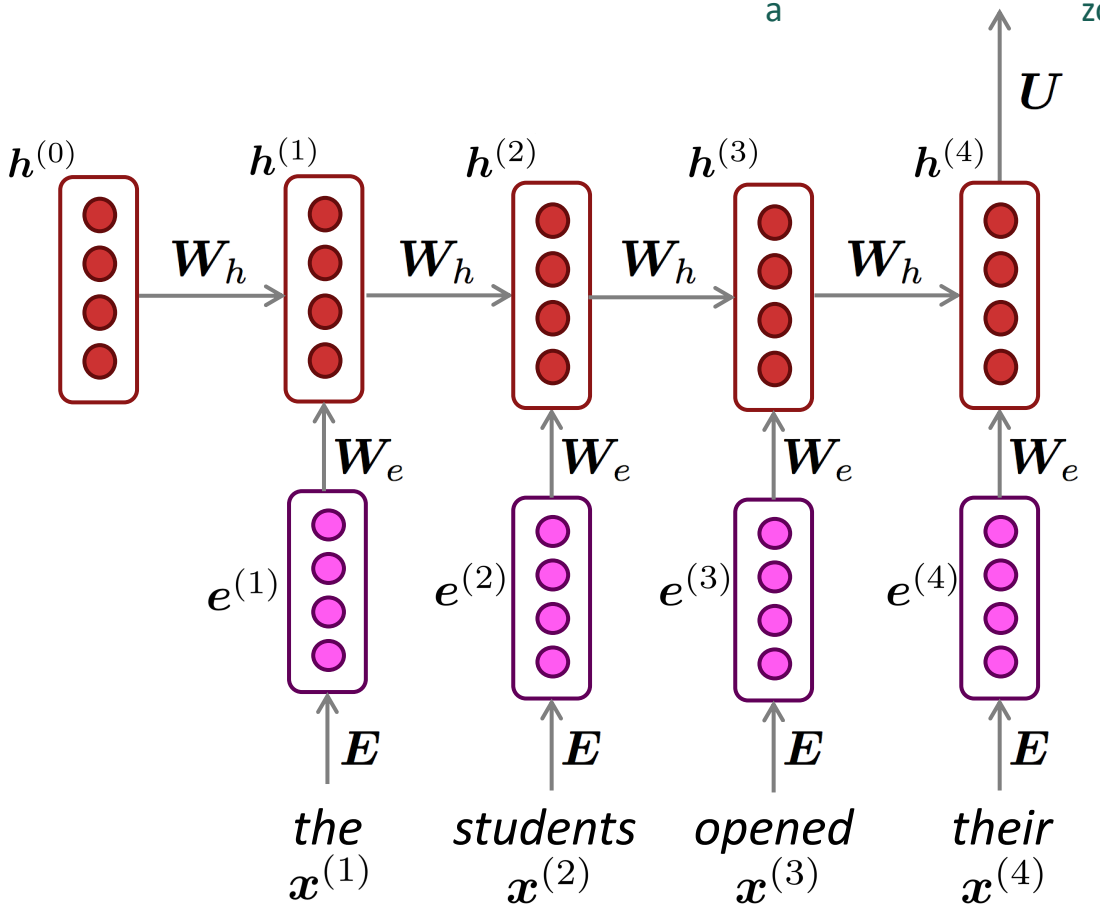

***Note**: this input sequence could be much longer now!*

Training the parameters of RNNs: Backpropagation for RNNs

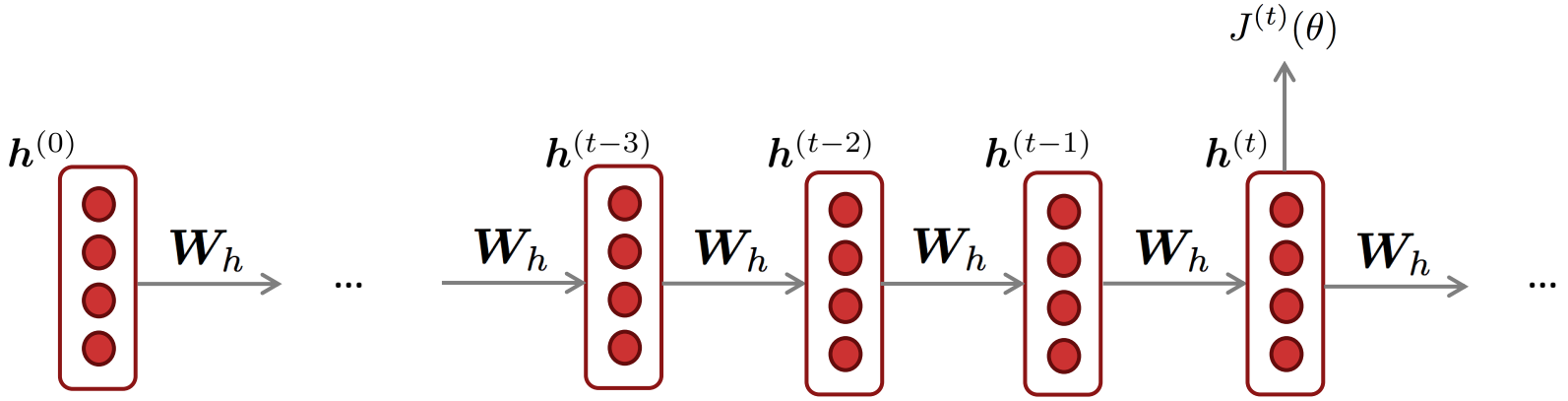

<u>Question:</u> What's the derivative of $J^{(t)}(\theta)$ w.r.t. the repeated weight matrix $\boldsymbol{W}_h$?

<u>Answer:</u> $$\frac{\partial J^{(t)}}{\partial \boldsymbol{W_h}} = \sum_{i=1}^{t} \frac{\partial J^{(t)}}{\partial \boldsymbol{W_h}}\bigg|_{(i)}$$

"The gradient w.r.t. a repeated weight is the sum of the gradient w.r.t. each time it appears"

Backpropagation for RNNs

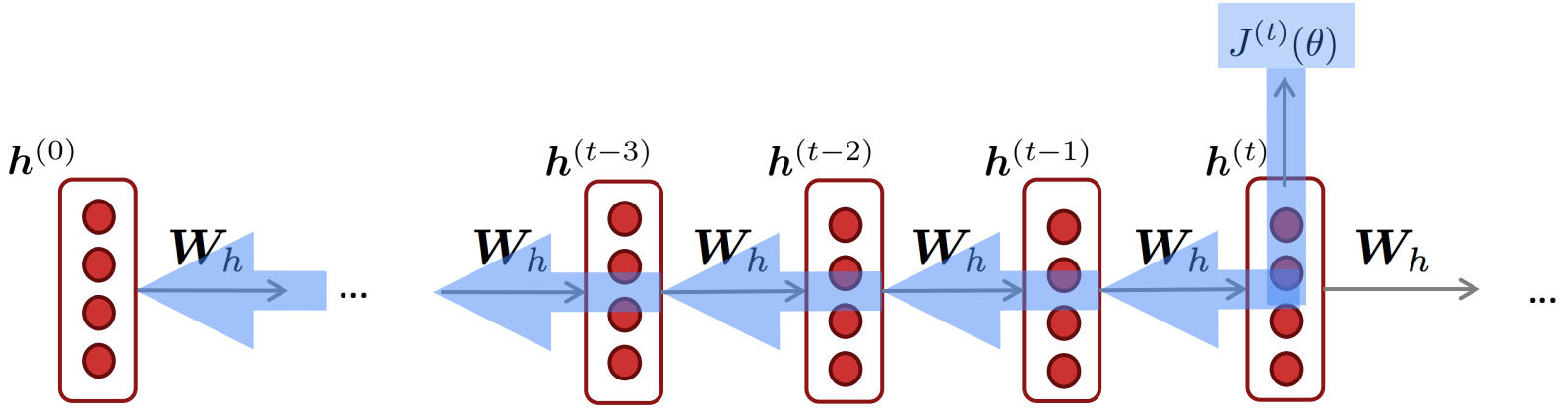

$$\frac{\partial J^{(t)}}{\partial \boldsymbol{W_h}} = \boxed{\sum_{i=1}^{t} \frac{\partial J^{(t)}}{\partial \boldsymbol{W_h}}\bigg|_{(i)}}$$

Question: How do we calculate this?

Answer: Backpropagate over timesteps *i*=*t*,…,0, summing gradients as you go. This algorithm is called **"backpropagation through time"** [Werbos, P.G., 1988, *Neural Networks* **1**, and others]

A problem: Vanishing gradients

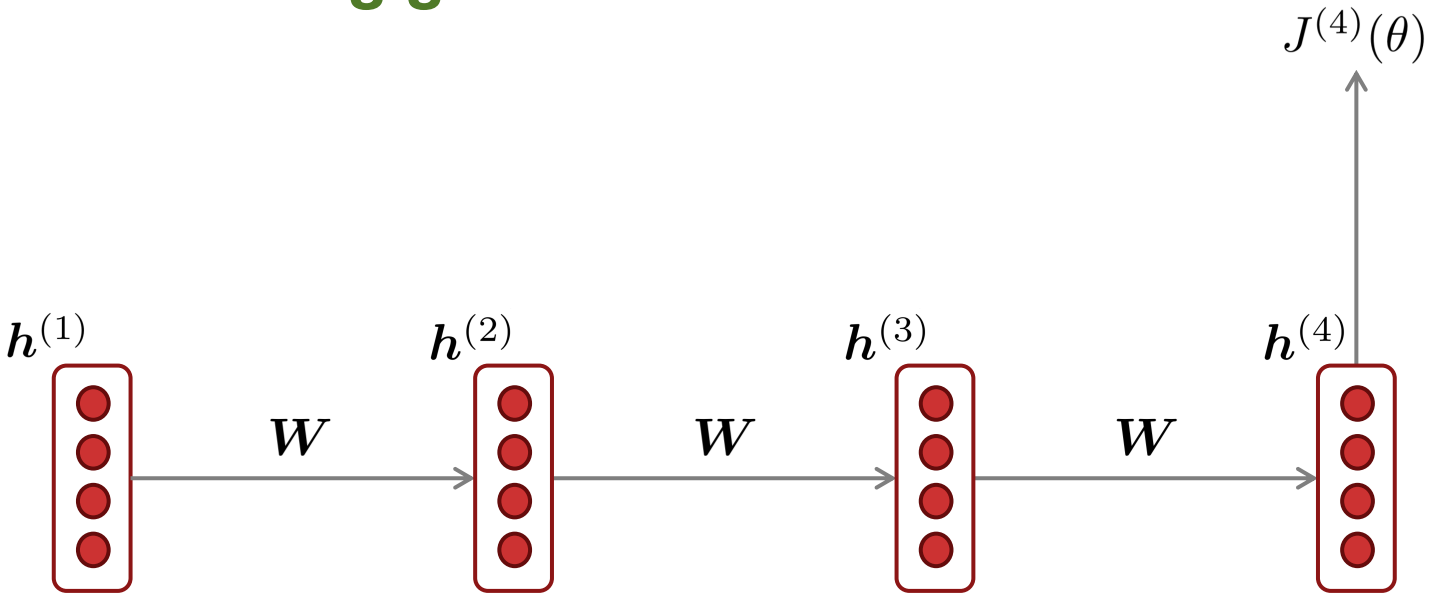

We will backpropagate the overall loss.

Vanishing gradient intuition

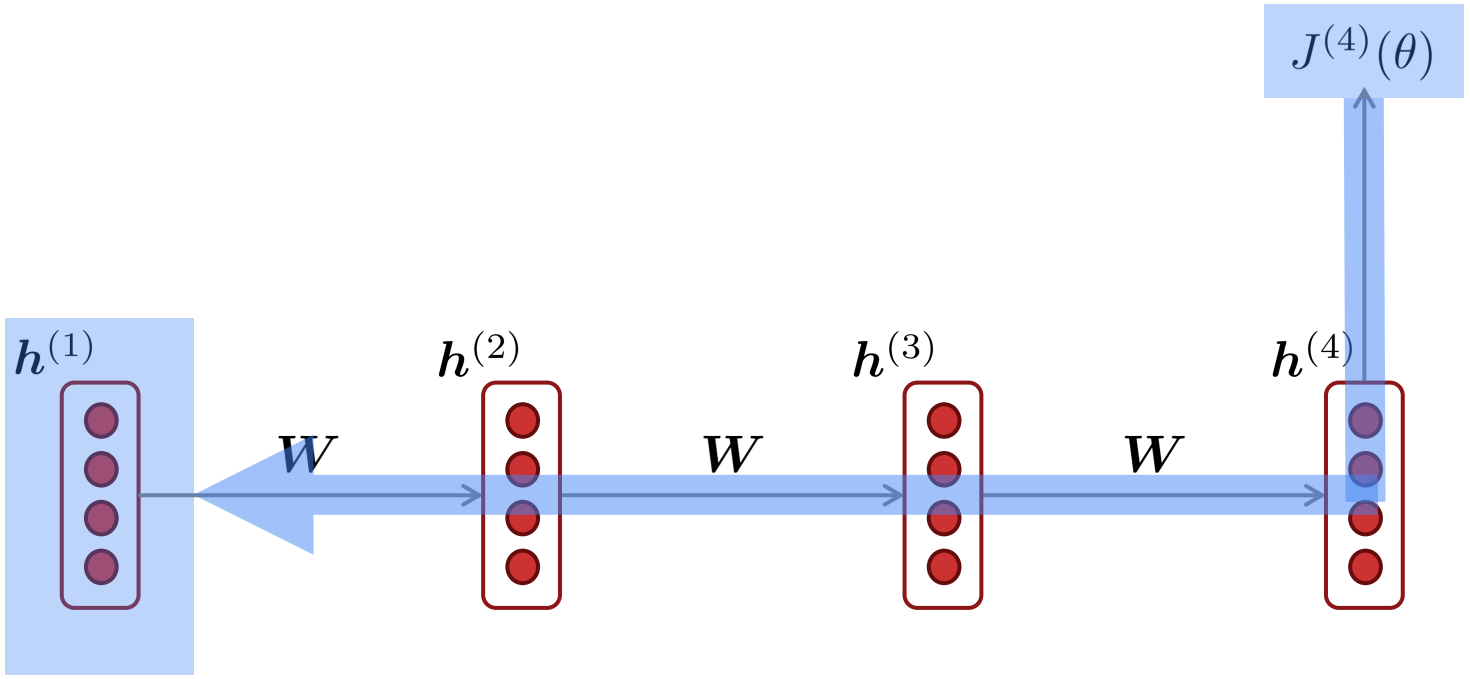

We will backpropagate the overall loss.

$$\frac{\partial J^{(4)}}{\partial \boldsymbol{h}^{(1)}} = \ ?$$

Vanishing gradient intuition

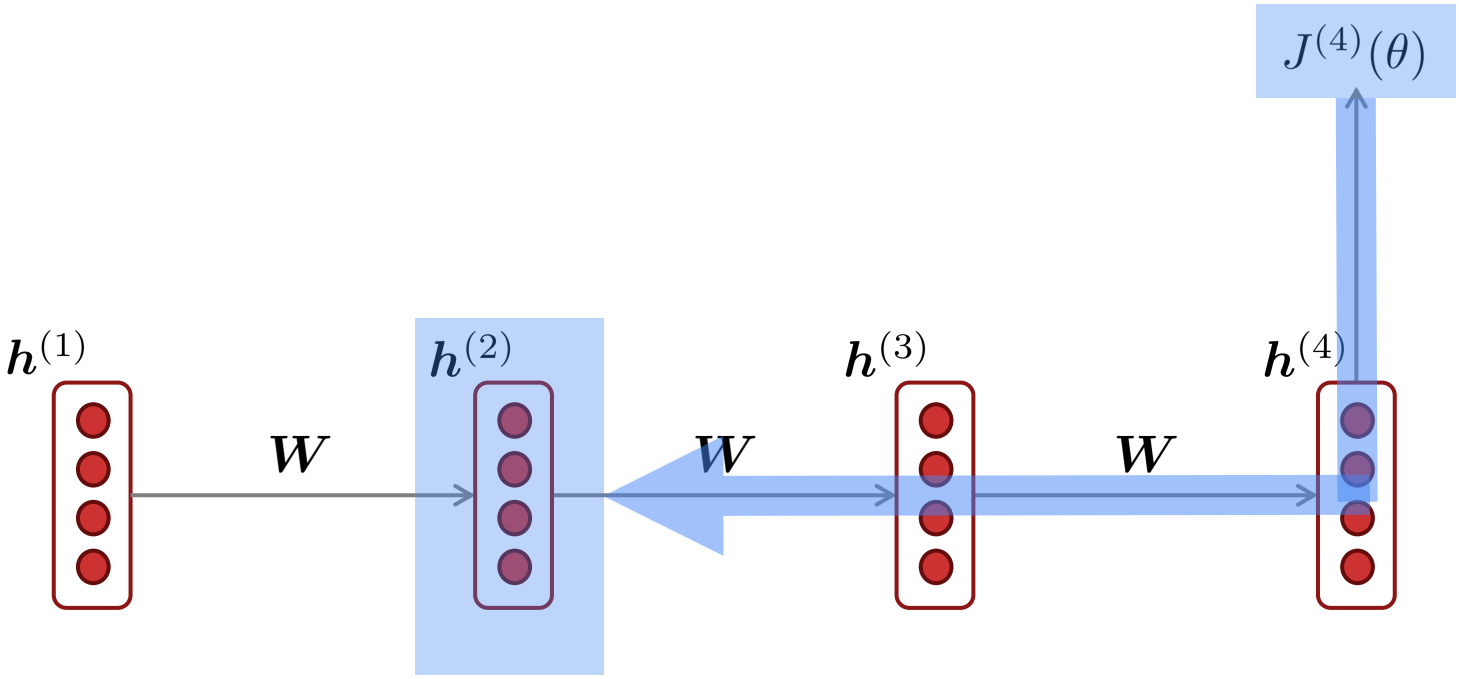

$$\frac{\partial J^{(4)}}{\partial \boldsymbol{h}^{(1)}} = \frac{\partial \boldsymbol{h}^{(2)}}{\partial \boldsymbol{h}^{(1)}} \times \frac{\partial J^{(4)}}{\partial \boldsymbol{h}^{(2)}}$$

chain rule!

Vanishing gradient intuition

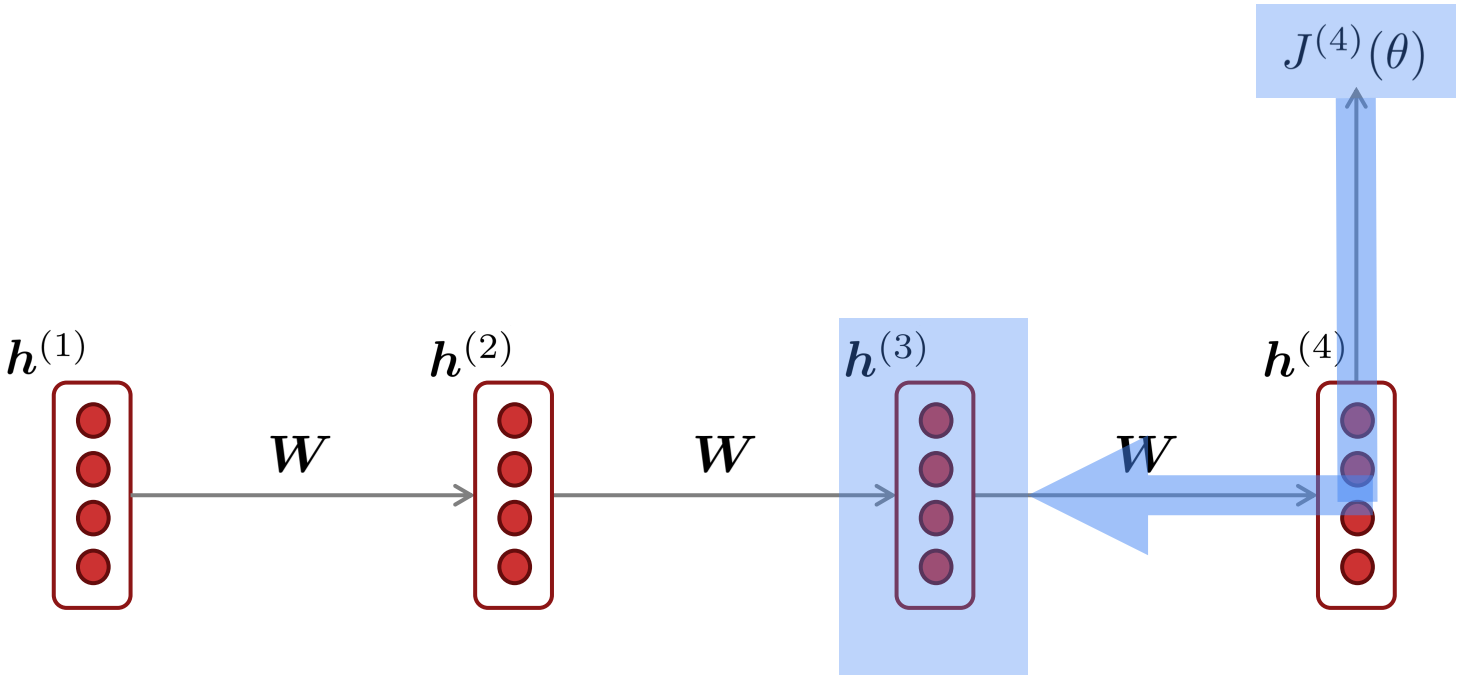

$$\frac{\partial J^{(4)}}{\partial \boldsymbol{h}^{(1)}} = \frac{\partial \boldsymbol{h}^{(2)}}{\partial \boldsymbol{h}^{(1)}} \times \frac{\partial \boldsymbol{h}^{(3)}}{\partial \boldsymbol{h}^{(2)}} \times \frac{\partial J^{(4)}}{\partial \boldsymbol{h}^{(3)}}$$

chain rule!

Vanishing gradient intuition

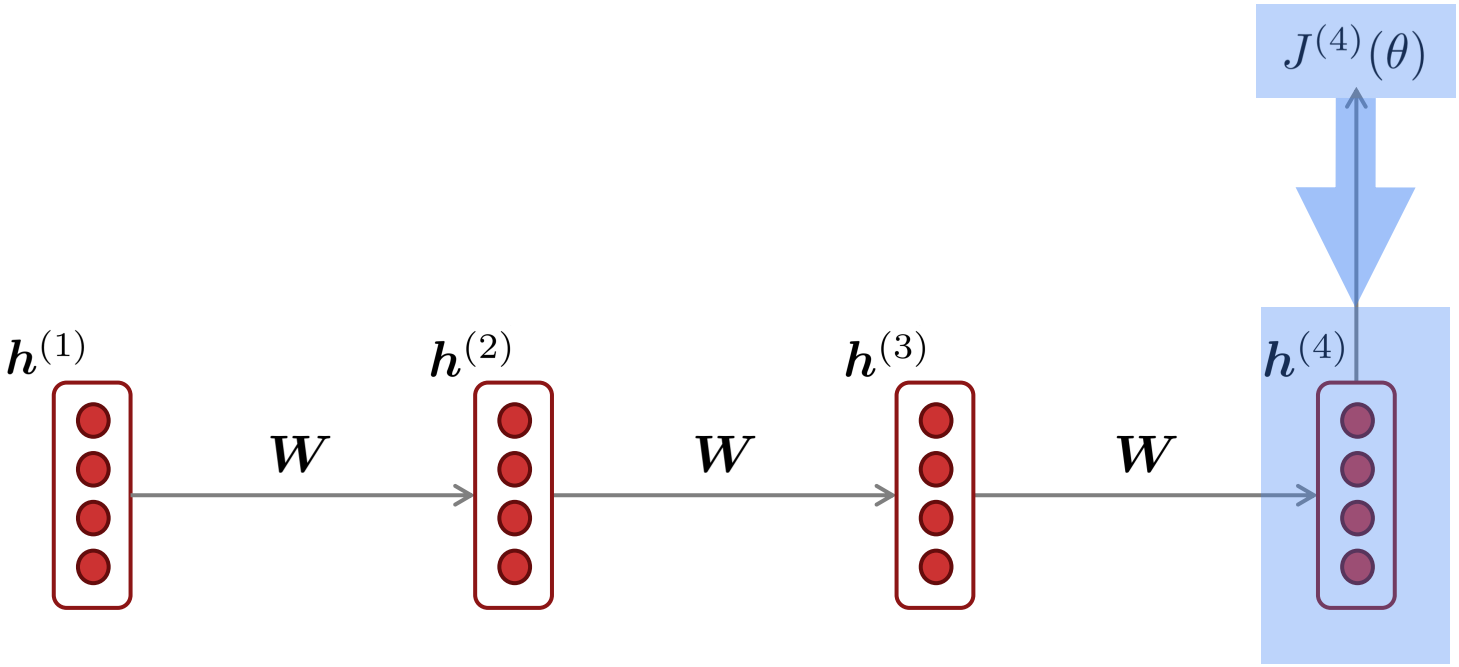

$$\frac{\partial J^{(4)}}{\partial \boldsymbol{h}^{(1)}} = \frac{\partial \boldsymbol{h}^{(2)}}{\partial \boldsymbol{h}^{(1)}} \times \frac{\partial \boldsymbol{h}^{(3)}}{\partial \boldsymbol{h}^{(2)}} \times \frac{\partial \boldsymbol{h}^{(4)}}{\partial \boldsymbol{h}^{(3)}} \times \frac{\partial J^{(4)}}{\partial \boldsymbol{h}^{(4)}}$$

chain rule!

Vanishing gradient intuition

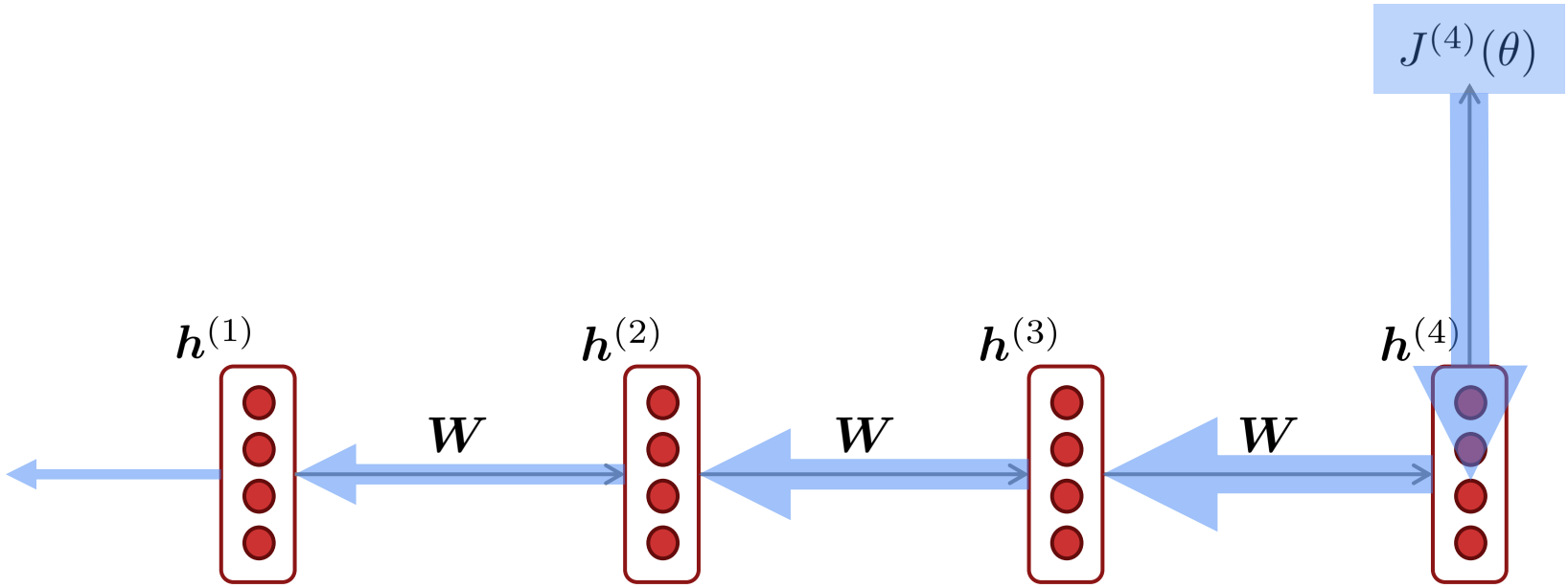

$$\frac{\partial J^{(4)}}{\partial \boldsymbol{h}^{(1)}} = \boxed{\frac{\partial \boldsymbol{h}^{(2)}}{\partial \boldsymbol{h}^{(1)}}} \times \boxed{\frac{\partial \boldsymbol{h}^{(3)}}{\partial \boldsymbol{h}^{(2)}}} \times \boxed{\frac{\partial \boldsymbol{h}^{(4)}}{\partial \boldsymbol{h}^{(3)}}} \times \frac{\partial J^{(4)}}{\partial \boldsymbol{h}^{(4)}}$$

What happens if these are small?

Vanishing gradient problem:
When these are small, the gradient signal gets smaller and smaller as it backpropagates further

Why is vanishing gradient a problem?

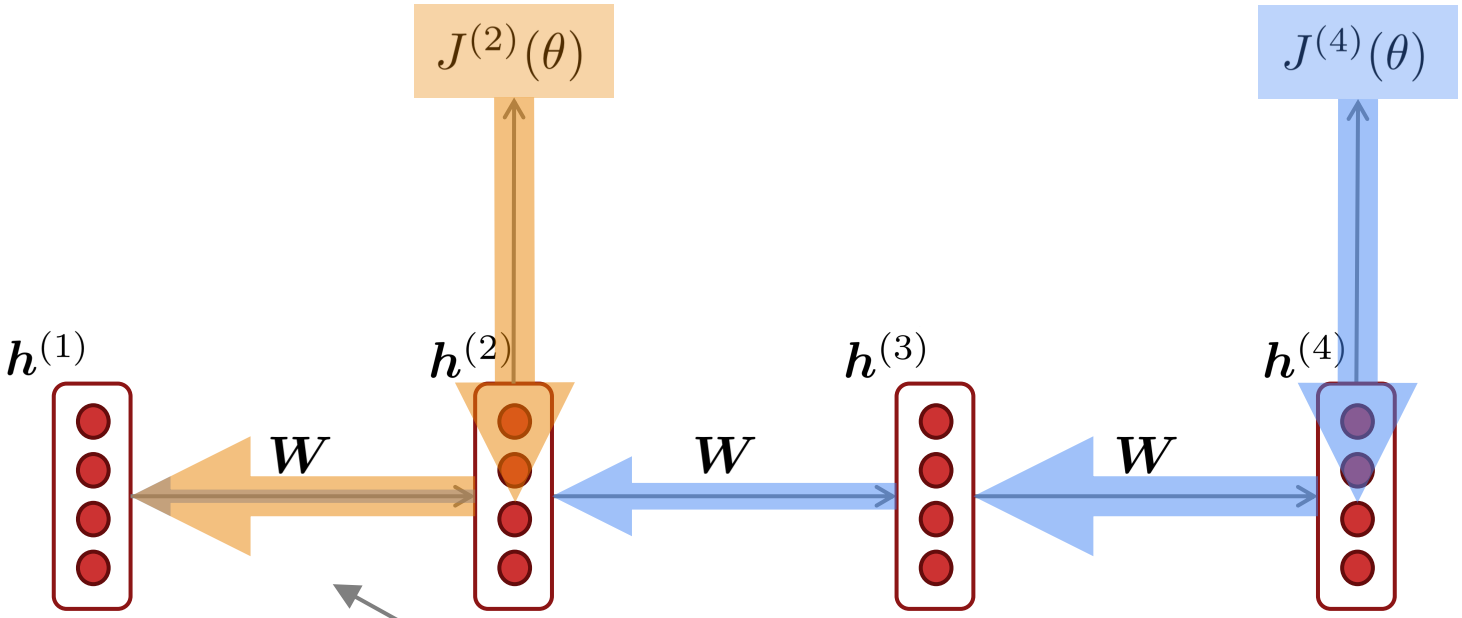

Gradient signal from far away is lost because it's much smaller than gradient signal from close-by.

So, model weights are updated only with respect to near effects, not long-term effects.

Effect of vanishing gradient on RNN-LM

- **LM task:** *When she tried to print her tickets, she found that the printer was out of toner. She went to the stationery store to buy more toner. It was very overpriced. After installing the toner into the printer, she finally printed her* _____

- To learn from this training example, the RNN-LM needs to model the dependency between *"tickets"* on the 7th step and the target word *"tickets"* at the end.

- But if gradient is small, the model can't learn this dependency
  - So, the model is unable to predict similar long-distance dependencies at test time

Another example of errors by RNN LMs due to vanishing gradient:

The writer of the books _____

The LM is asked to predict the next word between ‘is’ and ‘are’

Due to vanishing gradients, RNN-LMs are prone to make mistakes in identifying such subject-verb dependencies [Linzen et al 2016]

How to fix the vanishing gradient problem?

- The main problem is that *it's too difficult for the RNN to learn to preserve information over many timesteps*.

- In a vanilla RNN, the hidden state is constantly being rewritten

$$\boldsymbol{h}^{(t)} = \sigma\left(\boldsymbol{W}_h \boldsymbol{h}^{(t-1)} + \boldsymbol{W}_x \boldsymbol{x}^{(t)} + \boldsymbol{b}\right)$$

- How about a RNN with separate memory?

We want this separate memory to be more flexible, so that we can use it to preserve some specific information (instead of being rewritten at every stage).

4. Long Short-Term Memory RNNs (LSTMs)

- A type of RNN proposed by Hochreiter and Schmidhuber in 1997 as a solution to the vanishing gradients problem.

  The value of the ideas in these papers was actually understood long after.

  - Everyone cites that paper but really a crucial part of the modern LSTM is from Gers et al. (2000) 💜

- On step *t*, there is a hidden state $\boldsymbol{h}^{(t)}$ *and* a cell state $\boldsymbol{c}^{(t)}$
  - Both are vectors length *n*
  - The cell stores long-term information
  - The LSTM can read, erase, and write information from the cell
    - The cell becomes conceptually rather like RAM in a computer

- The selection of which information is erased/written/read is controlled by three corresponding gates
  - The gates are also vectors length *n*

    Probabilistic gates: each element of a gate is open with a probability

  - On each timestep, each element of the gates can be open (1), closed (0), or somewhere in-between
  - The gates are dynamic: their value is computed based on the current context

"Long short-term memory", Hochreiter and Schmidhuber, 1997. https://www.bioinf.jku.at/publications/older/2604.pdf
"Learning to Forget: Continual Prediction with LSTM", Gers, Schmidhuber, and Cummins, 2000. https://dl.acm.org/doi/10.1162/089976600300015015

Long Short-Term Memory (LSTM)

We have a sequence of inputs $x^{(t)}$, and we will compute a sequence of hidden states $h^{(t)}$ and cell states $c^{(t)}$. On timestep t:

Each gate has its own set of parameters W, U, b (which will be learned)

Forget gate: controls what is kept vs forgotten, from previous cell state

Input gate: controls what parts of the new cell content are written to cell

Output gate: controls what parts of cell are output to hidden state

New cell content: this is the new content to be written to the cell

Cell state: erase ("forget") some content from last cell state, and write ("input") some new cell content

Hidden state: read ("output") some content from the cell

Sigmoid function: all gate values are between 0 and 1

$$\boldsymbol{f}^{(t)} = \boxed{\sigma}\left(\boldsymbol{W}_f\boldsymbol{h}^{(t-1)} + \boldsymbol{U}_f\boldsymbol{x}^{(t)} + \boldsymbol{b}_f\right)$$

$$\boldsymbol{i}^{(t)} = \boxed{\sigma}\left(\boldsymbol{W}_i\boldsymbol{h}^{(t-1)} + \boldsymbol{U}_i\boldsymbol{x}^{(t)} + \boldsymbol{b}_i\right)$$

$$\boldsymbol{o}^{(t)} = \boxed{\sigma}\left(\boldsymbol{W}_o\boldsymbol{h}^{(t-1)} + \boldsymbol{U}_o\boldsymbol{x}^{(t)} + \boldsymbol{b}_o\right)$$

$$\tilde{\boldsymbol{c}}^{(t)} = \tanh\left(\boldsymbol{W}_c\boldsymbol{h}^{(t-1)} + \boldsymbol{U}_c\boldsymbol{x}^{(t)} + \boldsymbol{b}_c\right)$$

$$\boldsymbol{c}^{(t)} = \boldsymbol{f}^{(t)} \circ \boldsymbol{c}^{(t-1)} + \boldsymbol{i}^{(t)} \circ \tilde{\boldsymbol{c}}^{(t)}$$

$$\boldsymbol{h}^{(t)} = \boldsymbol{o}^{(t)} \circ \tanh \boldsymbol{c}^{(t)}$$

All these are vectors of same length n

These 3 equations are exactly similar to the eqn. for hidden state in vanilla RNN

Gates are applied using element-wise (or Hadamard) product: $\odot$

Long Short-Term Memory (LSTM)

We have a sequence of inputs $x^{(t)}$, and we will compute a sequence of hidden states $h^{(t)}$ and cell states $c^{(t)}$. On timestep t:

Forget gate: controls what is kept vs forgotten, from previous cell state

Input gate: controls what parts of the new cell content are written to cell

Output gate: controls what parts of cell are output to hidden state

New cell content: this is the new content to be written to the cell

Cell state: erase ("forget") some content from last cell state, and write ("input") some new cell content

Hidden state: read ("output") some content from the cell

Sigmoid function: all gate values are between 0 and 1

$$\boldsymbol{f}^{(t)} = \boxed{\sigma}\left(\boldsymbol{W}_f \boldsymbol{h}^{(t-1)} + \boldsymbol{U}_f \boldsymbol{x}^{(t)} + \boldsymbol{b}_f\right)$$

$$\boldsymbol{i}^{(t)} = \boxed{\sigma}\left(\boldsymbol{W}_i \boldsymbol{h}^{(t-1)} + \boldsymbol{U}_i \boldsymbol{x}^{(t)} + \boldsymbol{b}_i\right)$$

$$\boldsymbol{o}^{(t)} = \boxed{\sigma}\left(\boldsymbol{W}_o \boldsymbol{h}^{(t-1)} + \boldsymbol{U}_o \boldsymbol{x}^{(t)} + \boldsymbol{b}_o\right)$$

$$\tilde{\boldsymbol{c}}^{(t)} = \tanh\left(\boldsymbol{W}_c \boldsymbol{h}^{(t-1)} + \boldsymbol{U}_c \boldsymbol{x}^{(t)} + \boldsymbol{b}_c\right)$$

$$\boldsymbol{c}^{(t)} = \boldsymbol{f}^{(t)} \circ \boldsymbol{c}^{(t-1)} + \boldsymbol{i}^{(t)} \circ \tilde{\boldsymbol{c}}^{(t)}$$

$$\boldsymbol{h}^{(t)} = \boldsymbol{o}^{(t)} \circ \tanh \boldsymbol{c}^{(t)}$$

All these are vectors of same length n

For the new cell state, we want to remember some, but probably not all, of the previous cell state

To get the new cell state c(t), sum
- product of old cell state with forget gate
- product of the candidate cell update with the input gate

A candidate cell update (to be used to compute the new cell state)

The new hidden state, obtained from new cell state

Gates are applied using element-wise (or Hadamard) product: $\odot$

Long Short-Term Memory (LSTM)

You can think of the LSTM equations visually like this:

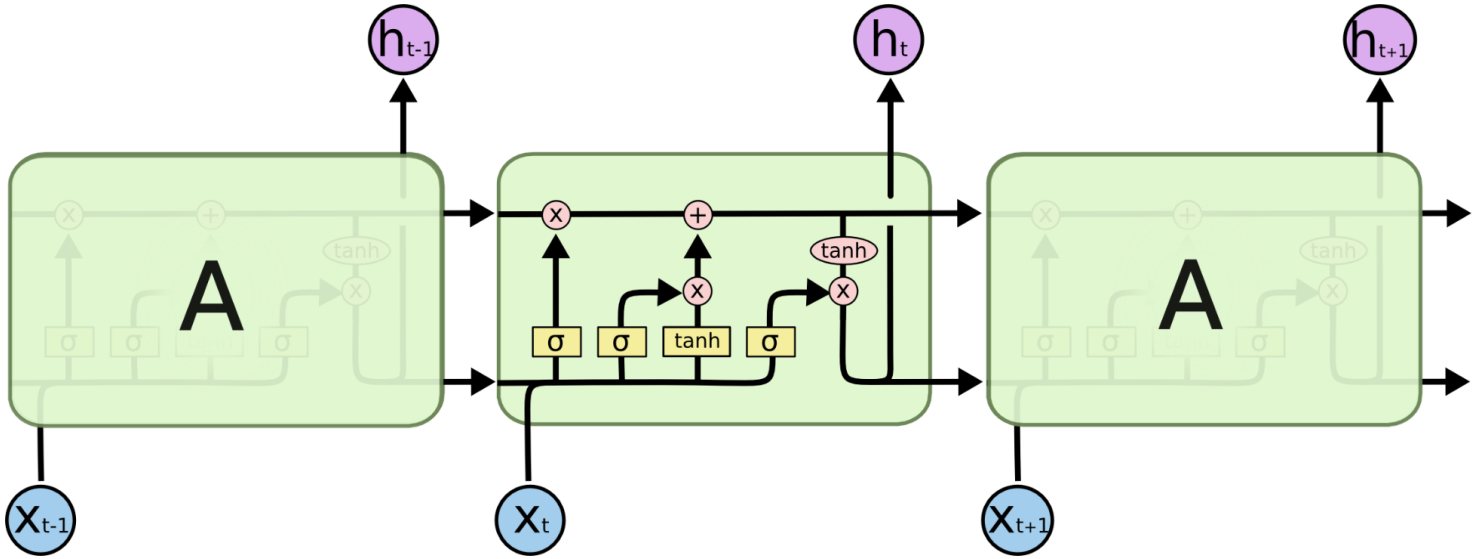

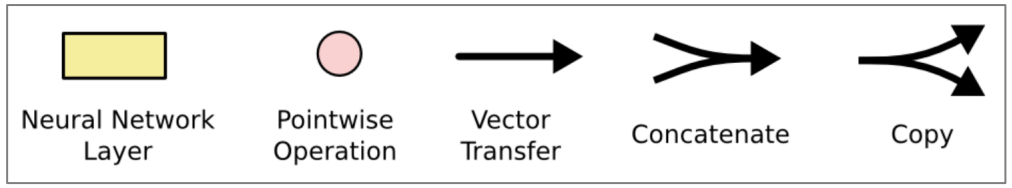

Source: http://colah.github.io/posts/2015-08-Understanding-LSTMs/

Long Short-Term Memory (LSTM)

You can think of the LSTM equations visually like this:

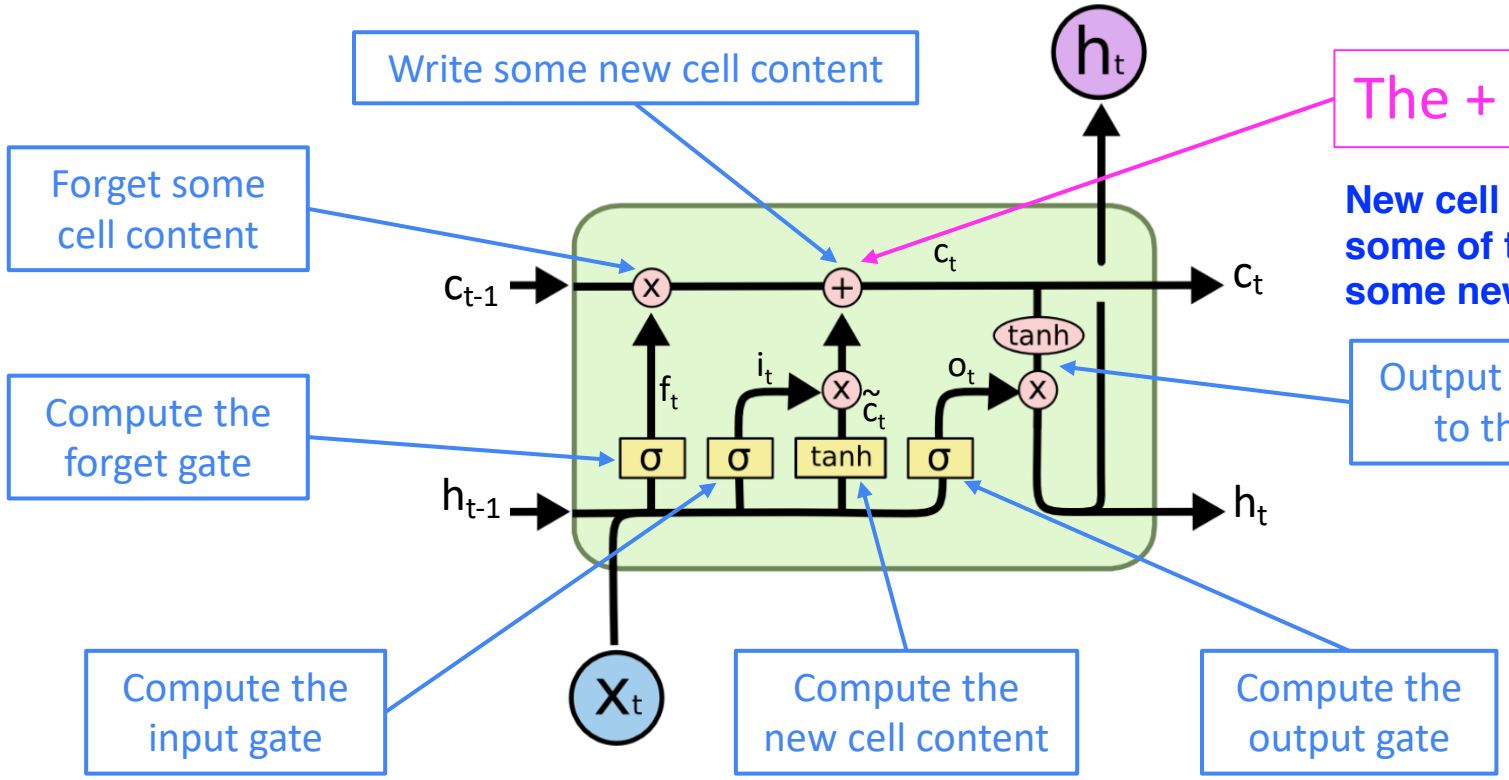

The + sign is the secret!

New cell content obtained by forgetting some of the old cell content, and adding some new content (helps preserve info).

The gate parameters are also being learnt. Effectively, the models learn what information is needed only in the short term (e.g., for predicting next couple of words) and what information has to be remembered in the long term.

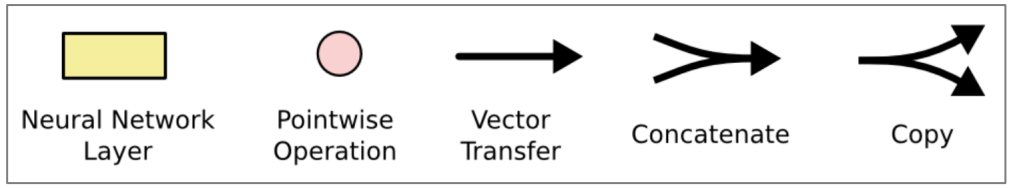

Source: http://colah.github.io/posts/2015-08-Understanding-LSTMs/

How does LSTM solve vanishing gradients?

- The LSTM architecture makes it easier for the RNN to preserve information over many timesteps
  - e.g., if the forget gate is set to 1 for a cell dimension and the input gate set to 0, then the information of that cell is preserved indefinitely.
  - In contrast, it's harder for a vanilla RNN to learn a recurrent weight matrix W_h that preserves info in the hidden state
  - In practice, you get about 100 timesteps rather than about 7

- LSTM doesn't *guarantee* that there is no vanishing gradient, but it does provide an easier way for the model to learn long-distance dependencies

LSTMs: real-world success

- In 2013–2015, LSTMs started achieving state-of-the-art results
  - Successful tasks include handwriting recognition, speech recognition, machine translation, parsing, and image captioning, as well as language models
  - LSTMs became the dominant approach for most NLP tasks

- Now (2021), other approaches (e.g., Transformers) have become dominant for many tasks
  - For example, in **WMT** (a Machine Translation conference + competition):
  - In WMT 2016, the summary report contains "RNN" 44 times
  - In WMT 2019: "RNN" 7 times, "Transformer" 105 times

Source: "Findings of the 2016 Conference on Machine Translation (WMT16)", Bojar et al. 2016, http://www.statmt.org/wmt16/pdf/W16-2301.pdf
Source: "Findings of the 2018 Conference on Machine Translation (WMT18)", Bojar et al. 2018, http://www.statmt.org/wmt18/pdf/WMT028.pdf
Source: "Findings of the 2019Conference on Machine Translation (WMT19)", Barrault et al. 2019, http://www.statmt.org/wmt18/pdf/WMT028.pdf

Another RNN architecture to address vanishing gradients: GRU (Gated Recurrent Unit)

GRUs are simplified versions of LSTMs

LSTM - 3 gates - input gate, output gate, forget gate

GRU - 2 gates - update gate and reset gate. The update gate controls how much of the previous hidden state should be retained, and the reset gate determines how much of the past information to forget.

LSTM has two memories (hidden state and cell state) while GRU has just one memory (hidden state).

GRU has fewer parameters, can train faster. GRU and LST are comparable performance-wise.

Your task: learn the details of GRU

We have now got a better representation of words than Word embeddings:
Contextual or context-sensitive representations

The boat was tied on the river bank …

I deposited the account cheque in the bank …

Will the RNN / LSTM representation of the word “bank” be the same in the two sentences?

We have now got a better representation of words than Word embeddings:
Contextual or context-sensitive representations

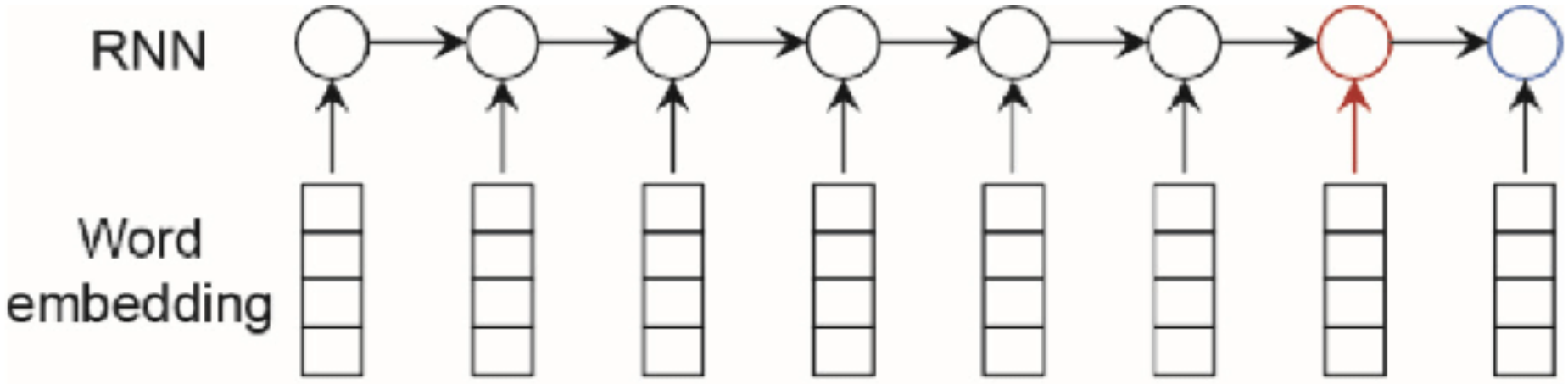

The boat was tied on the river bank …

I deposited the account cheque in the bank …

Will the RNN / LSTM representation of the word “bank” be the same in the two sentences?

5. Bidirectional and Multi-layer RNNs: motivation

Task: Sentiment Classification

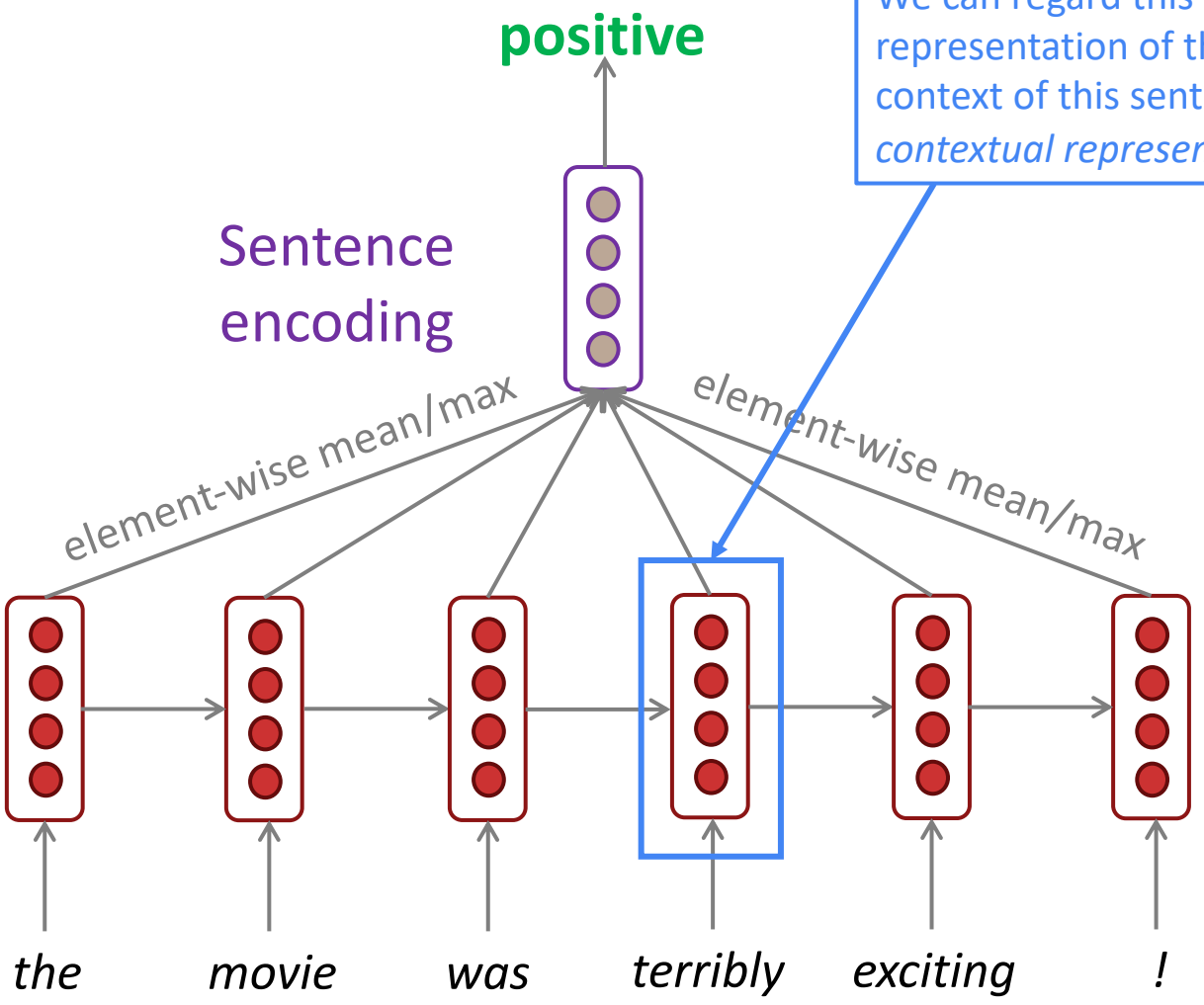

We can regard this hidden state as a representation of the word *"terribly"* in the context of this sentence. We call this a *contextual representation.*

These contextual representations only contain information about the *left* context (e.g. *"the movie was"*).

What about *right* context?

In this example, *"exciting"* is in the right context and this modifies the meaning of *"terribly"* (from negative to positive)

Bidirectional RNNs

This contextual representation of "terribly" has both left and right context!

Concatenated hidden states

A separate RNN, with its own parameters, learning a backward representation of the sentence

Backward RNN

Forward RNN

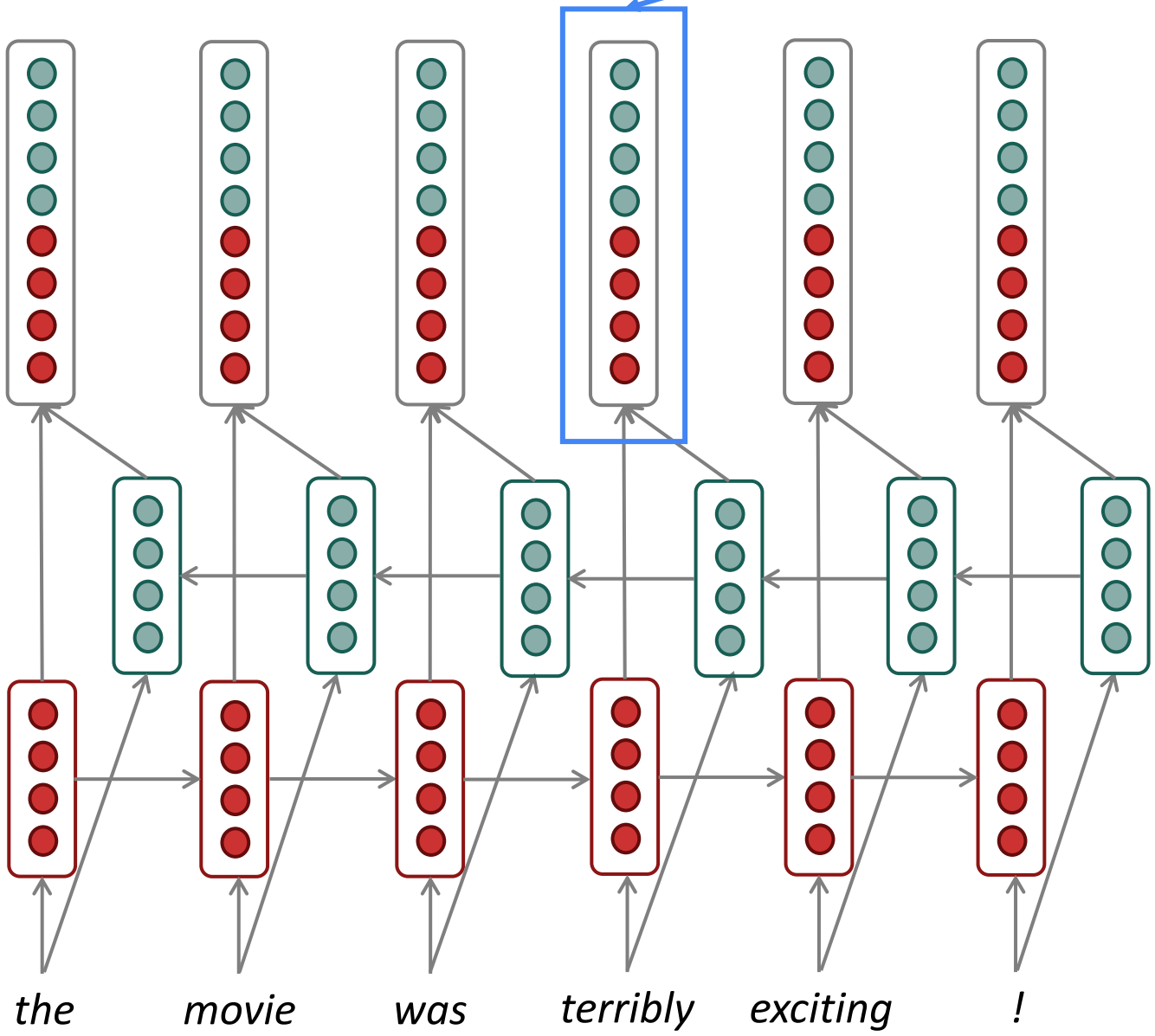

Bidirectional RNNs

On timestep *t*:

This is a general notation to mean "compute one forward step of the RNN" – it could be a vanilla, LSTM or GRU computation.

Forward RNN $\overrightarrow{\boldsymbol{h}}^{(t)} = \boxed{\mathrm{RNN}_{\mathrm{FW}}}(\overrightarrow{\boldsymbol{h}}^{(t-1)}, \boldsymbol{x}^{(t)})$

Backward RNN $\overleftarrow{\boldsymbol{h}}^{(t)} = \mathrm{RNN}_{\mathrm{BW}}(\overleftarrow{\boldsymbol{h}}^{(t+1)}, \boldsymbol{x}^{(t)})$

Generally, these two RNNs have separate weights

Concatenated hidden states $\boxed{\boldsymbol{h}^{(t)}} = [\overrightarrow{\boldsymbol{h}}^{(t)}; \overleftarrow{\boldsymbol{h}}^{(t)}]$

We regard this as "the hidden state" of a bidirectional RNN. This is what we pass on to the next parts of the network.

Bidirectional RNNs: simplified diagram

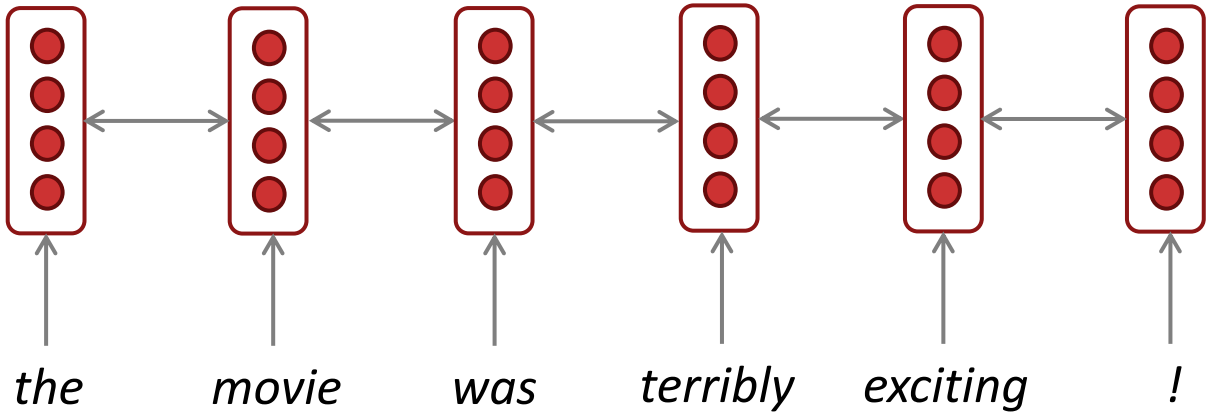

The two-way arrows indicate bidirectionality and the depicted hidden states are assumed to be the concatenated forwards+backwards states

Bidirectional RNNs

- Note: bidirectional RNNs are only applicable if you have access to the entire input sequence
  - They are **not** applicable to Language Modeling, because in LM you *only* have left context available.

- If you do have entire input sequence (e.g., any kind of encoding), bidirectionality is powerful (you should use it by default).

- For example, BERT (**Bidirectional** Encoder Representations from Transformers) is a powerful pretrained contextual representation system built on bidirectionality.

Multi-layer RNNs

- RNNs are already "deep" on one dimension (they unroll over many timesteps)

- We can also make them "deep" in another dimension by applying multiple RNNs – this is a multi-layer RNN.

- This allows the network to compute more complex representations
  - The lower RNNs should compute lower-level features and the higher RNNs should compute higher-level features.

- Multi-layer RNNs are also called *stacked RNNs*.

Examples:

Lower-level features - word properties, such as POS or whether the word is part of a named entiry

Higher-level features - about the overall structure of a sentence / phrase, e.g., the meaning, associated sentiment, etc.

Multi-layer RNNs

The hidden states from RNN layer *i* are the inputs to RNN layer *i*+1

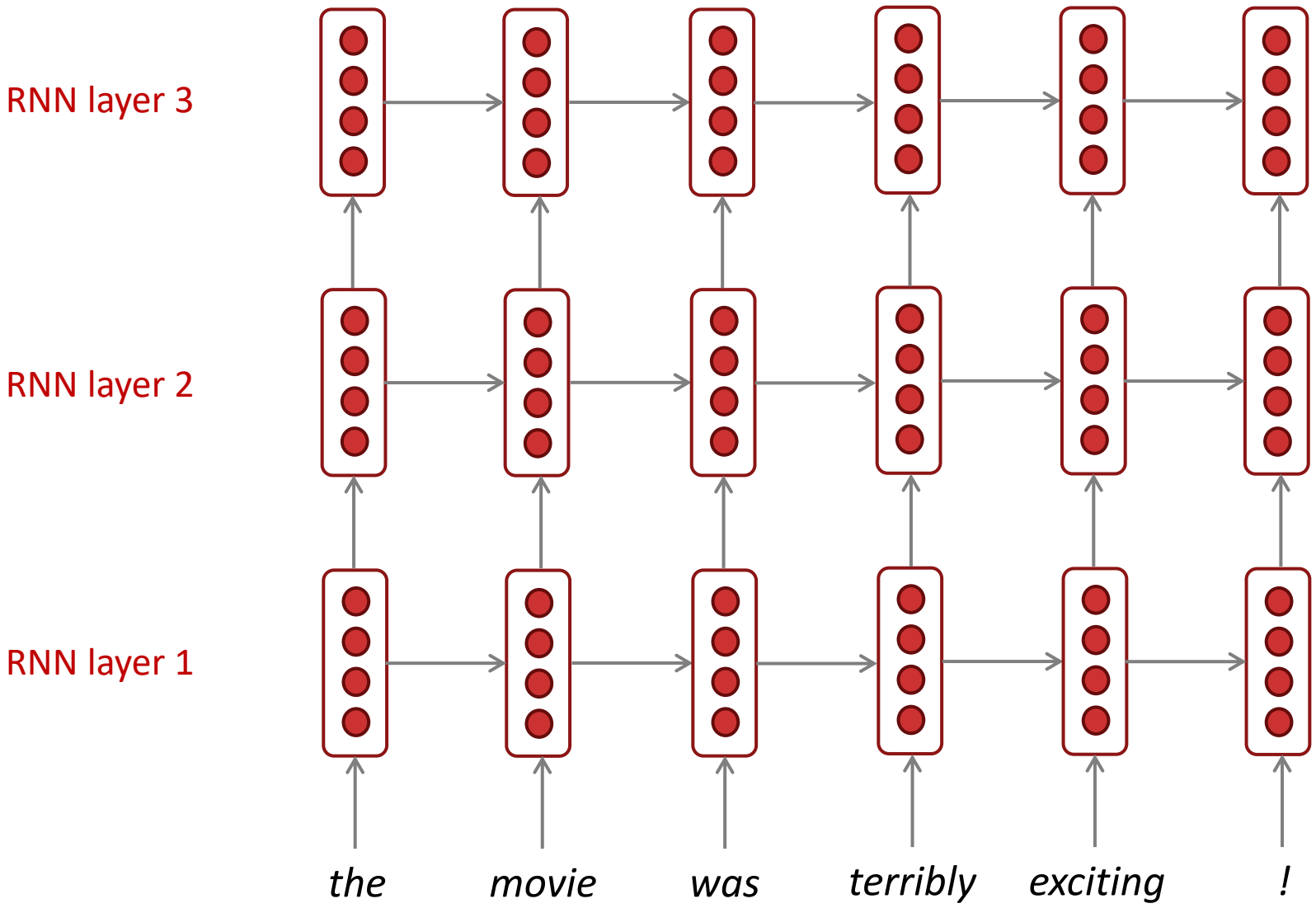

There is only one unit at each layer, i.e., only one set of parameter matrices at each layer.
The images are shown unfolded / unrolled over time.

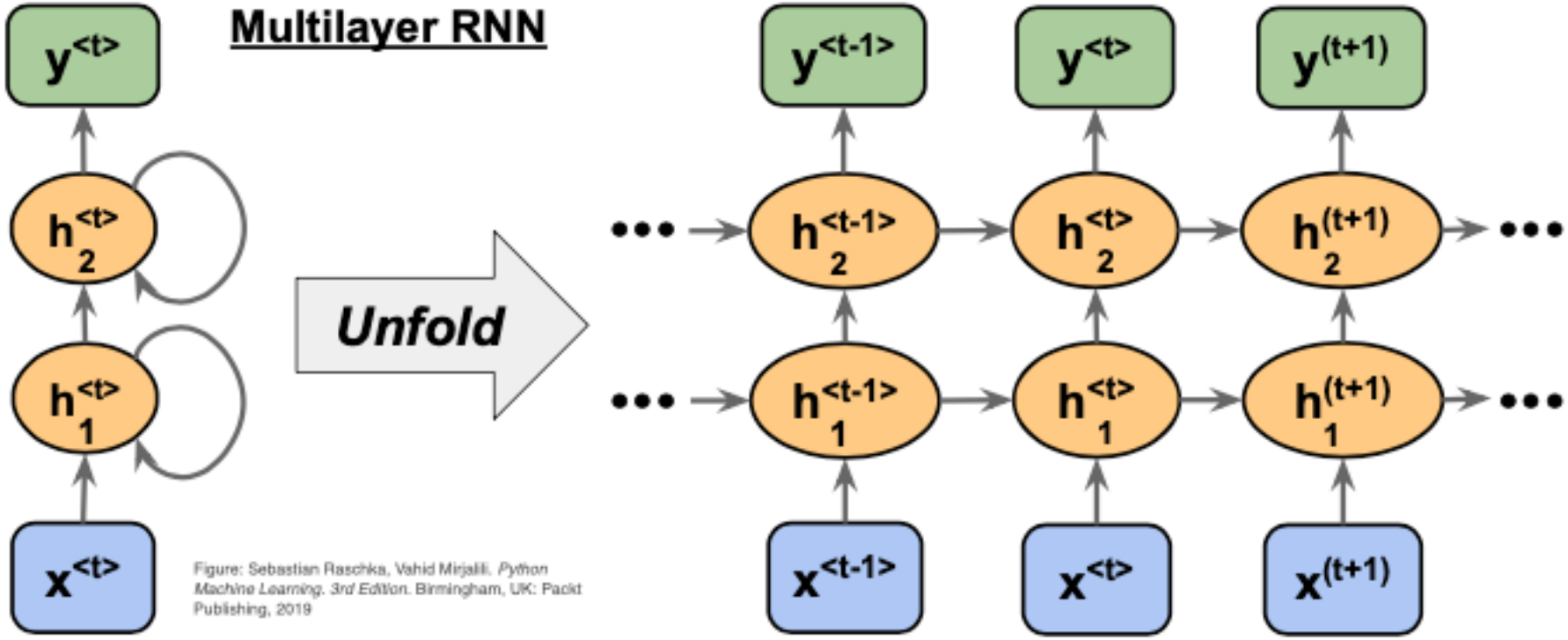

Figure: Sebastian Raschka, Vahid Mirjalili. *Python Machine Learning. 3rd Edition*. Birmingham, UK: Packt Publishing, 2019

Multi-layer RNNs in practice

- High-performing RNNs are often multi-layer (but aren't as deep as convolutional or feed-forward networks)

Multi-layer or stacked RNNs allow a network
to compute more complex representations of text.

- For example: In a 2017 paper, Britz et al find that for Neural Machine Translation, 2 to 4 layers is best for the encoder RNN, and 4 layers is best for the decoder RNN
  - Usually, skip-connections/dense-connections are needed to train deeper RNNs (e.g., 8 layers)

"Massive Exploration of Neural Machine Translation Architecutres", Britz et al, 2017. https://arxiv.org/pdf/1703.03906.pdf