PCF8574P has an i2c address of 0x38 instead of the normal 0x20

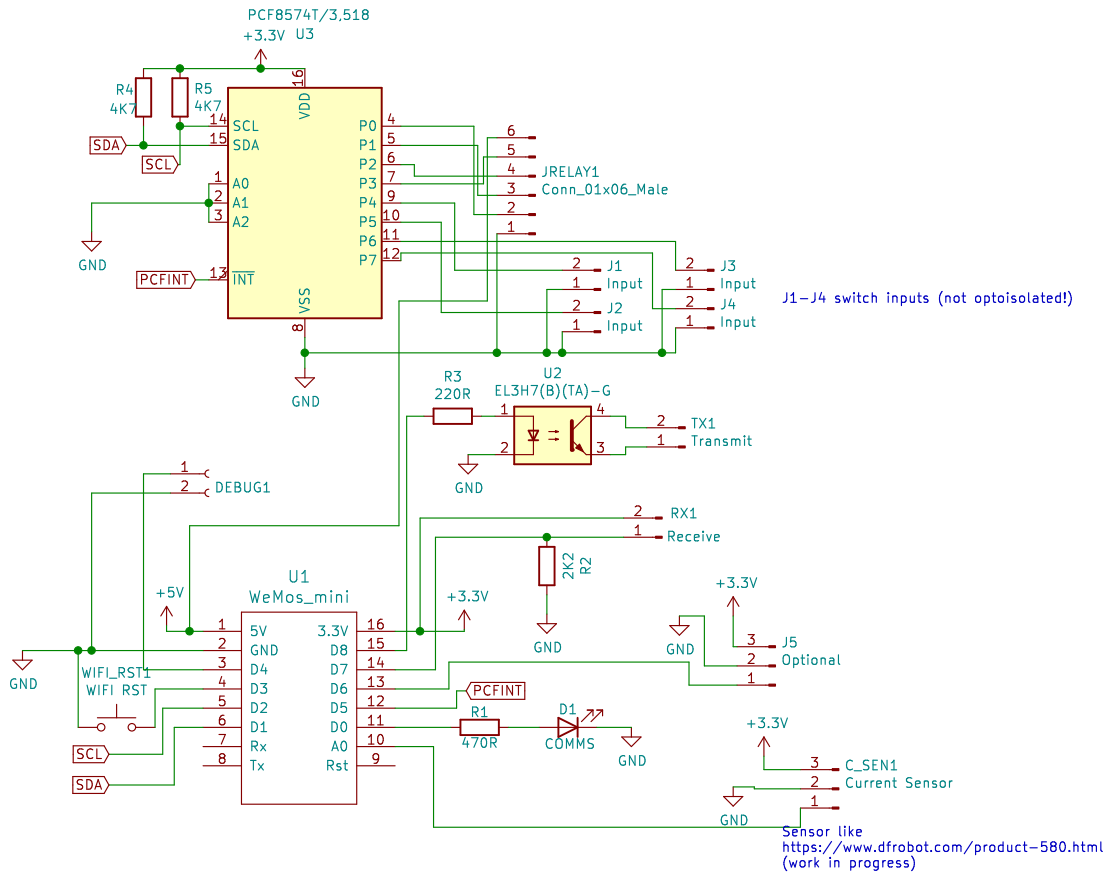

Sheet: /
File: ESPControllerCircuit.sch

Title:

Size: A4	Date:	Rev:
KiCad E.D.A. kicad (5.1.5)-3		Id: 1/1