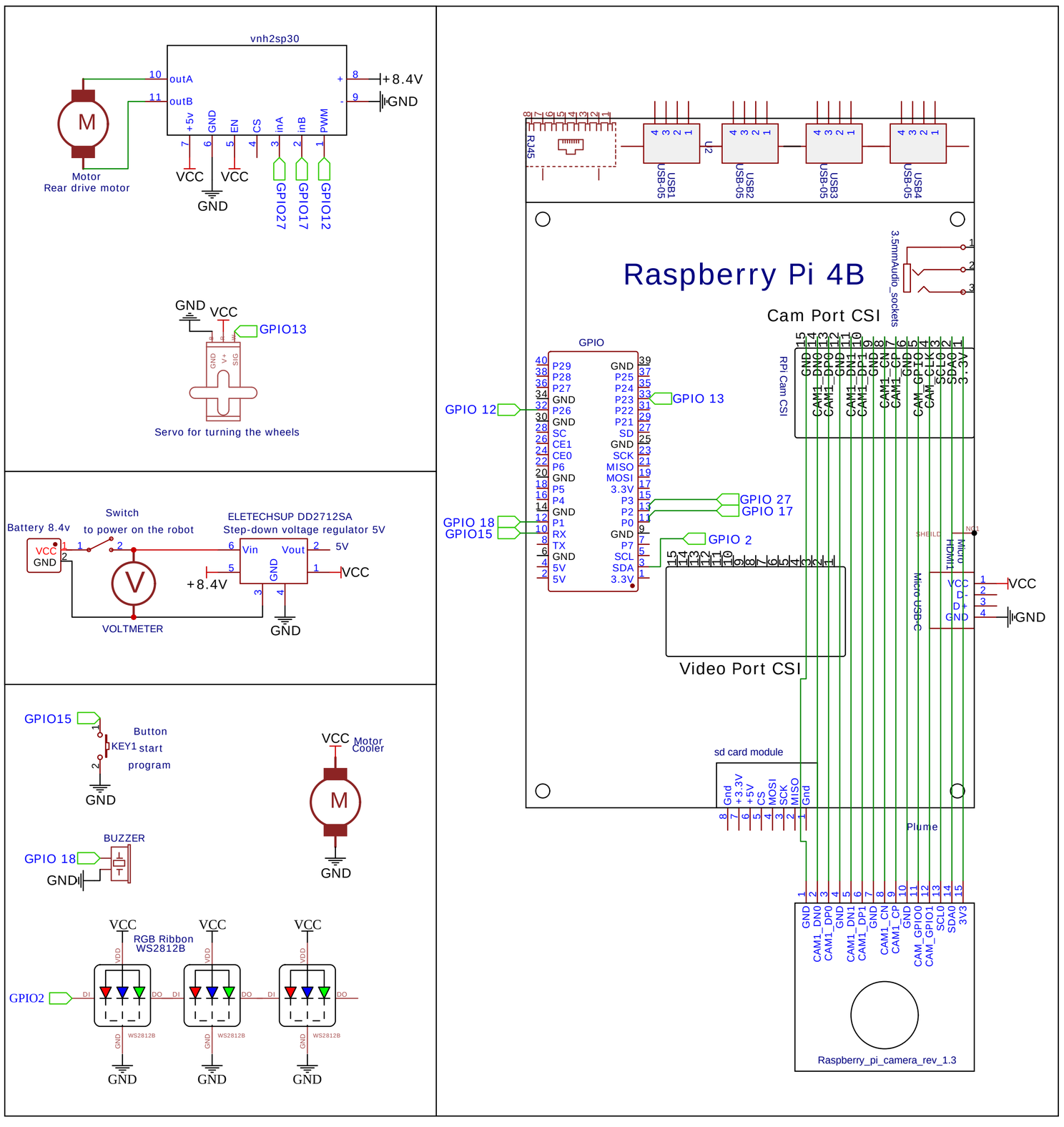
vnh2sp30
outA
outB
+5v
GND
EN
CS
inA
inB
PWM
+8.4V
GND
Motor
Rear drive motor
VCC
GPIO27
GPIO17
GPIO12
Servo for turning the wheels
GPIO13
Battery 8.4v
Switch
to power on the robot
ELETECHSUP DD2712SA
Step-down voltage regulator 5V
Vin
Vout
5V
VOLTMETER
GPIO15
Button
KEY1 start
program
Motor
Cooler
BUZZER
GPIO 18
RGB Ribbon
WS2812B
GPIO2
Raspberry Pi 4B
Cam Port CSI
GPIO
GPIO 12
GPIO 13
GPIO 27
GPIO 17
GPIO 18
GPIO15
GPIO 2
Video Port CSI
RJ45
USB1
USB2
USB3
USB4
3.5mmAudio_sockets
Micro HDMI1
Micro USB-C
sd card module
Gnd
+3.3V
+5V
CS
MOSI
SCK
MISO
Gnd
Plume
Raspberry_pi_camera_rev_1.3

Camera