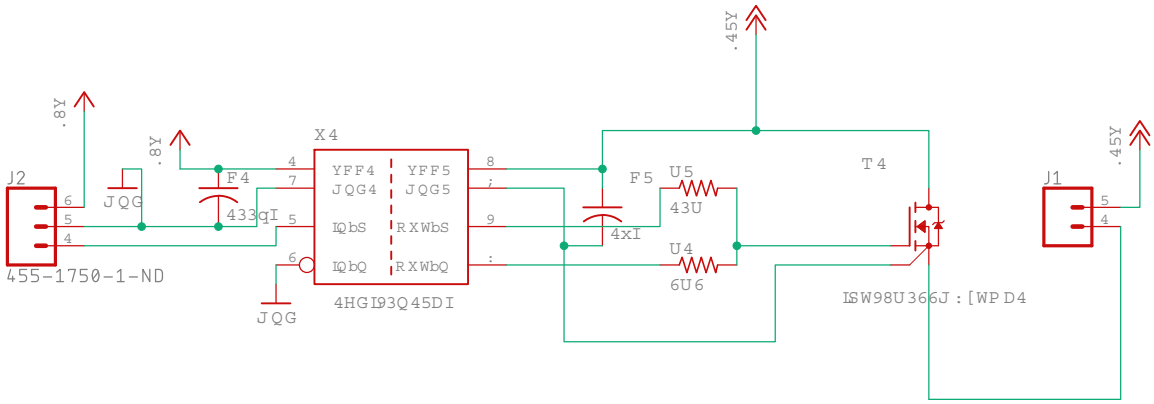

FrroEuhdnhu

534<23424;#8=55

Vkhhw= 424

534<23424;#8=64##F=Xvhuv_hgxduRqhGulyh_Grfxphqw_HDJOH_surmfw_FrroEuhdnhu#prgxo_FrroEuhdnhuvfk#Vkhhw#424,