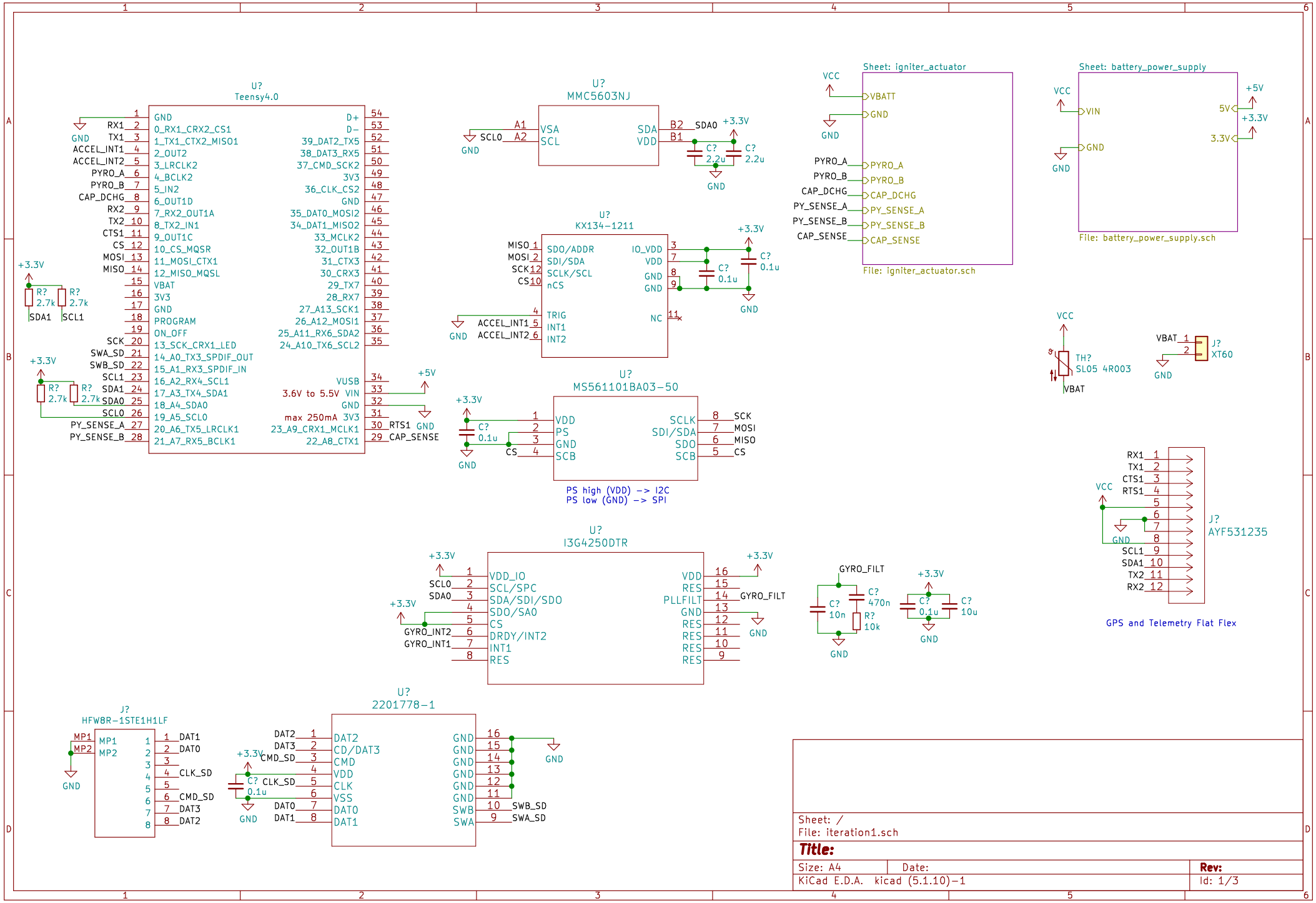
U?
Teensy4.0
GND
0_RX1_CRX2_CS1
1_TX1_CTX2_MISO1
2_OUT2
3_LRCLK2
4_BCLK2
5_IN2
6_OUT1D
7_RX2_OUT1A
8_TX2_IN1
9_OUT1C
10_CS_MQSR
11_MOSI_CTX1
12_MISO_MQSL
VBAT
3V3
GND
PROGRAM
ON_OFF
13_SCK_CRX1_LED
14_A0_TX3_SPDIF_OUT
15_A1_RX3_SPDIF_IN
16_A2_RX4_SCL1
17_A3_TX4_SDA1
18_A4_SDA0
19_A5_SCL0
20_A6_TX5_LRCLK1
21_A7_RX5_BCLK1
D+
D−
39_DAT2_TX5
38_DAT3_RX5
37_CMD_SCK2
3V3
36_CLK_CS2
GND
35_DAT0_MOSI2
34_DAT1_MISO2
33_MCLK2
32_OUT1B
31_CTX3
30_CRX3
29_TX7
28_RX7
27_A13_SCK1
26_A12_MOSI1
25_A11_RX6_SDA2
24_A10_TX6_SCL2
VUSB
3.6V to 5.5V VIN
GND
max 250mA 3V3
23_A9_CRX1_MCLK1
22_A8_CTX1
RX1
TX1
ACCEL_INT1
ACCEL_INT2
PYRO_A
PYRO_B
CAP_DCHG
RX2
TX2
CTS1
CS
MOSI
MISO
SCK
SWA_SD
SWB_SD
SCL1
SDA1
SDA0
SCL0
PY_SENSE_A
PY_SENSE_B
RTS1
CAP_SENSE
+3.3V
+5V
R? 2.7k
SDA1
SCL1
U?
MMC5603NJ
A1
A2
SCL0
VSA
SCL
SDA
VDD
B2
B1
SDA0
C? 2.2u
U?
KX134-1211
MISO
MOSI
SCK
CS
SDO/ADDR
SDI/SDA
SCLK/SCL
nCS
TRIG
INT1
INT2
IO_VDD
VDD
GND
NC
ACCEL_INT1
ACCEL_INT2
C? 0.1u
U?
MS561101BA03-50
VDD
PS
GND
SCB
SCLK
SDI/SDA
SDO
SCB
SCK
MOSI
MISO
CS
PS high (VDD) -> I2C
PS low (GND) -> SPI
U?
I3G4250DTR
VDD_IO
SCL/SPC
SDA/SDI/SDO
SDO/SA0
CS
DRDY/INT2
INT1
RES
GYRO_INT2
GYRO_INT1
VDD
RES
PLLFILT
GYRO_FILT
C? 470n
C? 10n
R? 10k
C? 10u
J?
HFW8R-1STE1H1LF
MP1
MP2
DAT1
DAT0
CLK_SD
CMD_SD
DAT3
DAT2
U?
2201778-1
DAT2
DAT3
CMD_SD
CMD
VDD
CLK
VSS
DAT0
DAT1
SWB
SWA
SWB_SD
SWA_SD
Sheet: igniter_actuator
VBATT
PYRO_A
PYRO_B
CAP_DCHG
PY_SENSE_A
PY_SENSE_B
CAP_SENSE
File: igniter_actuator.sch
Sheet: battery_power_supply
VIN
5V
3.3V
File: battery_power_supply.sch
TH? SL05 4R003
VBAT
J? XT60
J? AYF531235
RX1
TX1
CTS1
RTS1
SCL1
SDA1
TX2
RX2
GPS and Telemetry Flat Flex
Sheet: /
File: iteration1.sch
Title:
Size: A4
Date:
Rev:
KiCad E.D.A. kicad (5.1.10)-1
Id: 1/3

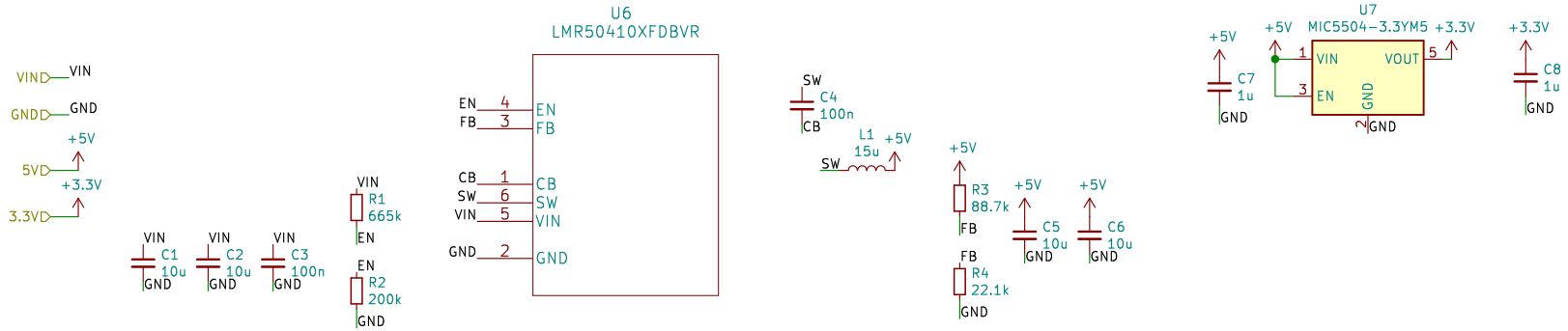

Sheet: /battery_power_supply/
File: battery_power_supply.sch

Title:

Size: A4	Date:	**Rev:**
KiCad E.D.A. kicad (5.1.10)-1		Id: 2/3

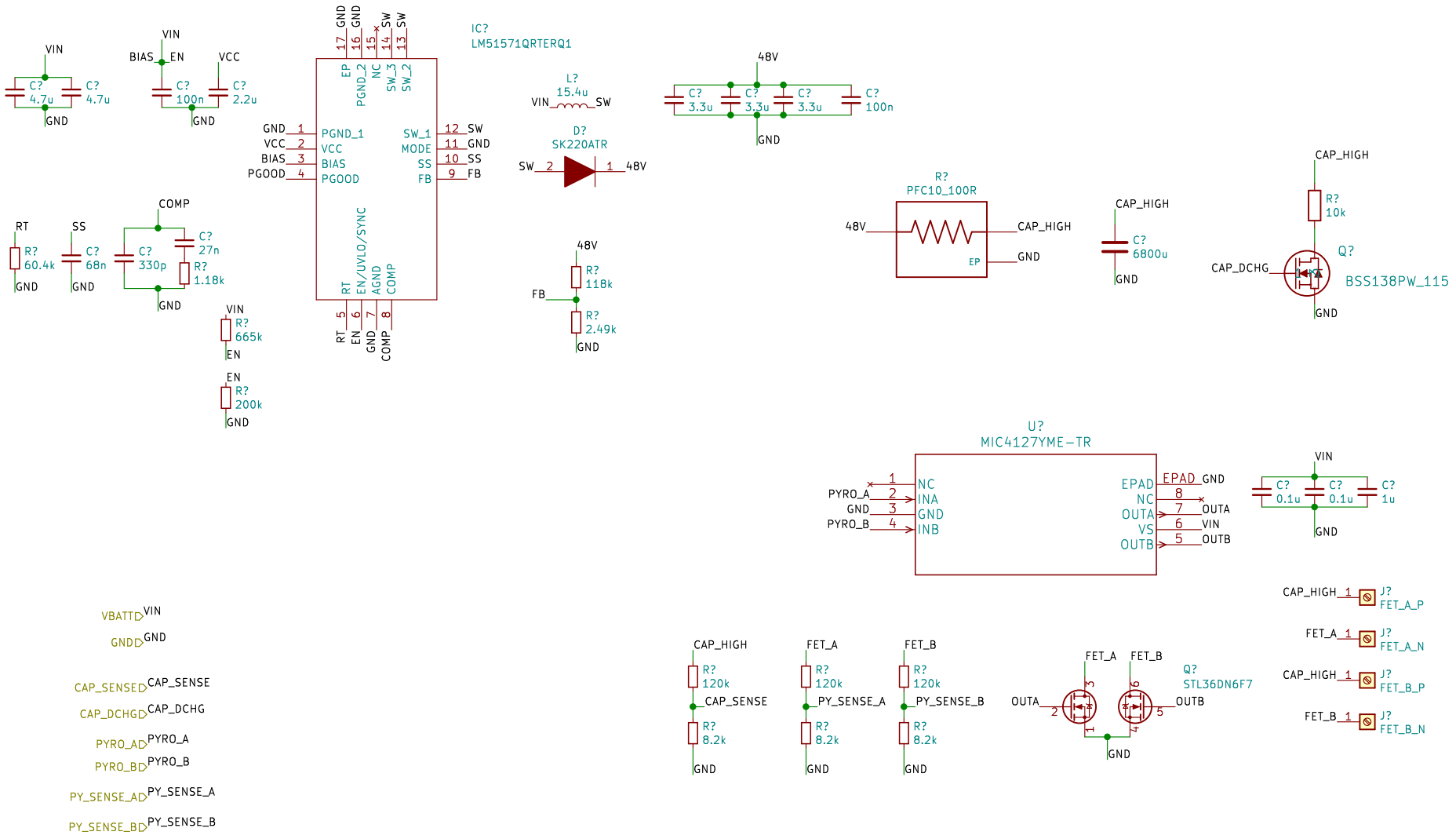

Sheet: /igniter_actuator/
File: igniter_actuator.sch

Title:

Size: A4	Date:	Rev:
KiCad E.D.A. kicad (5.1.10)-1		Id: 3/3