Time-to-Digital Converters for Time-of-Flight Applications in LIDAR, Range Finders, and Flow Meters

1. FEATURES

- Typical time resolution: 38ps
- Standard Deviation:
  - 10ps (Mode 1, 100ns)
  - 50ps (Mode 2, 10μs)
- Measurement Range:
  - Mode 1: 3ns to 1000ns
  - Mode 2: 250ns to 8ms
  - Mode 3: 0ns to 1000ns (with inner delay compensation for dead time)
  - Mode 4: 250ns to 250ms
- Support up to 5 STOP Signals
- Autonomous Multi-Cycle Averaging Mode, up to 128 Sampling Average and Save Host Controller Power
- Support SPI Interface and Multiple Register Accessible
- Power Supply: 2.2V to 3.6V
- Low Current Consumption in Standby Mode with 200μA
- Operating Temperature: -40°C to 125°C
- Package: TSSOP14

2. APPLICATION

- Ultrasonic meter: Gas Meter, Water Meter.
- Time of Flight measurement in SONAR，LIDAR，Drones, Robot Vacuum Cleaner.
- Displacement Sensing.
- Collision Detection Systems
- Biomedical Engineering Instruments, PET-CT Image, Fluorescence-lifetime-image.

3. GENERAL DESCRIPTION

The TMIS7701 is a time to digital converters (TDC). It performs the function of a stopwatch and measures the elapsed picoseconds to microseconds between a START pulse and up to five STOP pulses. The ability to measure from START to multiple STOPs gives users the flexibility to select which STOP pulse yields the best echo performance.

The device has an internal self-calibrated time base which compensates for drift over time and temperature. Self-calibration enables time-to-digital conversion accuracy in the order of picoseconds. The high time resolution and accuracy make TMIS7701 ideal for time-of-flight sensing, such as in centimeter accuracy LIADR application and ultrasonic flow metering. TMIS7701 can work in the Autonomous Multi-Cycle Averaging Mode. In this mode, the host can go to sleep to save power, and it can wake up when interrupted by the TDC upon completion of the measurement sequence. This working mode is optimized for low system power consumption, making it ideal for battery powered flow meters.

4. Absolute Maximum Ratings

Symbol	Parameter	Min	Max	Unit
VDD	Low-voltage digital supply	-0.3	3.9	V
VI	Terminal Input voltage	-0.3	VDD+0.3	V
V_{DIFF_IN}	Voltage differential| between any two input terminals		3.9	V
$V_{IN_GND_VDD}$	Voltage differential| between input terminals between GND and VDD		3.9	V
I_{IN}	Input current at any pin	-5	5	mA
T_A	Ambient operating temperature	-40	125	°C
T_{stg}	Storage temperature	-40	150	°C

5. PIN CONFIGURATION

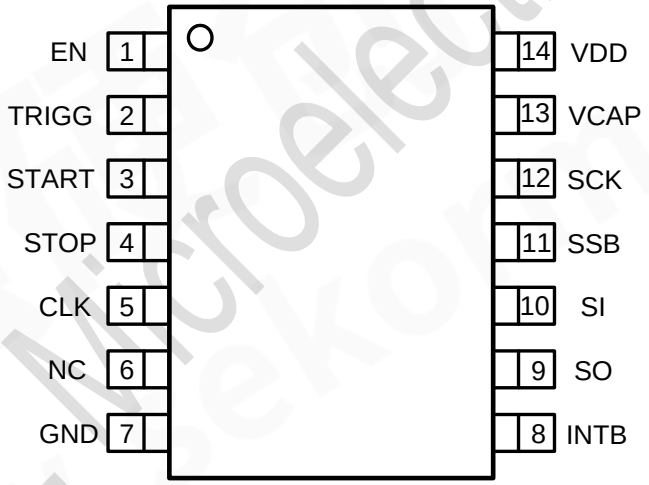

TSSOP14
Top View

Top Mark: TMIS7701/XXXXX (TMIS7701: Device Code, XXXXX: Inside Code)

Part Number	Package	Top mark	Quantity/Reel
TMIS7701	TSSOP14	T7701 XXXXX	4000

TMIS7701 devices are Pb-free and RoHS compliant.

6. PIN FUNCTIONS

Pin	Name	Type	Function
1	EN	Input	Input enable signal to TDC
2	TRIGG	Output	Trigger output signal
3	START	Input	START signal
4	STOP	Input	STOP signal
5	CLK	Input	Clock input
6	NC	-	Not Connected
7	GND	Ground	Ground
8	INTB	Output	Interrupt to MCU
9	SO	Output	SPI data output
10	SI	Input	SPI data input
11	SSB	Input	SPI chip selection for TDC1, Active low
12	SCK	Input	SPI clock
13	VCAP	Output	LDO output terminal for external decoupling cap
14	VDD	Power	Supply input

7. ESD RATING

Items	Description	Value	Unit
V_{ESD_HBM}	Human Body Model for all pins	±4000	V
V_{ESD_CDM}	Charged Device Model for all pins	±1000	V

JEDEC specification JS-002

TOLL Microelectronic Inc.
www.sekorm.com

8. Recommended Operating Conditions

T_A = 25°C, V_{DD1}=V_{DD2} = 3.3V (unless otherwise noted).

Parameter	Test Conditions	Min	TYP	Max	Unit
V_{DD}	Supply voltage	2.2		3.6	V
VI	Terminal voltage	0		V_{DD}	V
VIH	Voltage input high	0.7xV_{DD}		3.6	V
VIL	Voltage input low	0		0.3xV_{DD}	V
F_{CALIB_CLK}	Frequency (Reference or Calibration Clock)	1	8	16	MHz
T_{CLOCK}	Time period (Reference or Calibration clock)	62.5	125	1000	ns
$DUTY_{CLOCK}$	Input clock duty cycle		50		%
Timing Requirements: Measurement Mode 1					
$T_{1STARTSTOP_Min}$	Minimum Time between Start and Stop Signal	3			ns
$T_{1STOPSTOP_Min}$	Minimum Time between 2 Stop Signals	40			ns
$T_{1STARTSTOP_MAX}$	Maximum Time between Start and Stop Signals		1500		ns
$T_{1STOPSTOP_MAX}$	Maximum Time between Stop and Stop Signals		1500		ns
Timing Requirements: Measurement Mode 2					
$T_{2STARTSTOP_Min}$	Minimum Time between Start and Stop Signal	$2\times t_{CLOCK}$			s
$T_{2STOPSTOP_Min}$	Minimum Time between Stop and Stop Signal	$2\times t_{CLOCK}$			s
$T_{2STARTSTOP_Max}$	Maximum Time between Start and Stop Signal			$(2^{16}-2)\times t_{CLOCK}$	s
$T_{2STOPSTOP_Max}$	Maximum Time between Stop and Stop Signal			$(2^{16}-2)\times t_{CLOCK}$	s
Timing Requirements: Enable Input					
T_{REN}	Rise Time for Enable Signal (20%-80%)	2		200	ns
T_{FEN}	Fall Time for Enable Signal (20%-80%)	2		200	ns
Timing Requirements: START, STOP, CLK					
T_{RST}, T_{FST}	Maximum rise, fall time for START, STOP signals (20%- 80%)		2		ns
T_{RXCLK}, T_{FXCLK}	Maximum rise, fall time for external CLOCK (20%-80%)		2		ns
Timing Requirements: TRIGG					
$T_{TRIGSTART}$	Time from TRIG to START			6	ns
Temperature					
T_A	Ambient temperature	-40		125	ºC
T_J	Junction temperature	-40		125	ºC

9. Thermal Information

Items	Description	Value	Unit
θ_{JA}	Junction-to-ambient thermal resistance	135	°C/W
$\theta_{JC(top)}$	Junction-to-case (top) thermal resistance	63	°C/W
θ_{JB}	Junction-to-board thermal resistance	75	°C/W
ψ_{JT}	Junction-to-top characterization parameter	12	°C/W
ψ_{JB}	Junction-to-board characterization parameter	76	°C/W

10.Electrical Characteristics

PARAMETER	TEST CONDITIONS	Min	TYP	Max	Unit
TDC Characteristics					
LSB	Single shot measurement		38		ps
T_{ACC-2} Accuracy Mode 2	LOCK = 8 MHz		25		ps
T_{STD-2} Standard Deviation Mode 2	Measured Time = 200μs		50		ps
	Measured Time = 2μs		45		ps
Output Characteristics: TRIGG, INTB, SO					
V_{OH} Output voltage high	I_{source} = -2 mA	2.32	2.95		V
V_{OL} Output voltage low	I_{sink} = 2 mA		0.35	0.99	V
Input Characteristics: EN, START, STOP, CLK, SI, SSB, SCK					
C_{in} Input capacitance			3		pF
Power Consumption					
I_{SD} Shutdown current	EN = LOW		0.1		μA
I_{QA} Quiescent Current A	EN=HIGH, TDC running		1.4		mA
I_{QB} Quiescent Current B	EN=HIGH, TDC OFF, Clock Counter running		300		μA
I_{QC} Quiescent Current C	EN = HIGH; measurement stopped, SPI communication only		350		μA
I_{QD} Quiescent Current D	EN = HIGH, TDC OFF, counter stopped, no communication		200		μA

TOLL Microelectronic Inc.

11.Timing Requirements

PARAMETER		MIN	TYP	MAX	UNIT
Timing Requirements: START, STOP, CLOCK					
PW_{START}	Pulse width for START signal	10			ns
PW_{STOP}	Pulse width for STOP signal	10			ns
Serial Interface Timing Characteristics (VDD=3.3V, f_{SCLK}=25MHz)					
f_{CSCLK}	SCK frequency			25	MHz
t_1	SCK period	40			ns
Serial Interface Timing Characteristics (VDD=3.3V, f_{SCLK}=20MHz)					
t_1	SCK period	50			ns
t_2	SCK high time	16			ns
t_3	SCK low time	16			ns
t_4	SI setup time	5			ns
t_5	SI hold time	5			ns
t_6	SSB fall to SCK rise	6			ns
t_7	Last SCK rising edge to SSB rising edge	6			ns
t_8	Minimum pause time (SSB high)	40			ns
t_9	SCK fall to SO bus transient			12	ns
Wake Up Time					
t_{Wakeup_period}	Time to be ready for measurement		300		μs

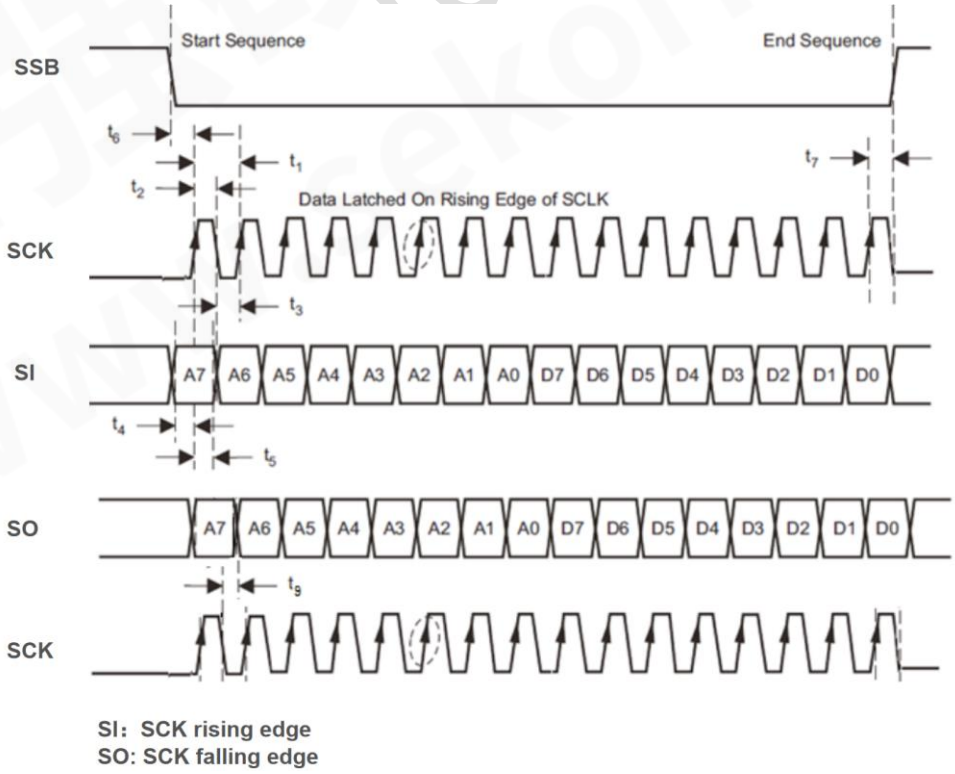

Figure 2. SPI Register Write: 8 bit Register Example

12.Detailed Description

Overview

TMIS7701 performs time measurement when START edge is asserted, and multiple subsequent measurements could be achieved when valid STOP edge is captured. The internal high precision time base can help measure time with accuracy in the order of picoseconds, this feature makes TMIS7701 ideal for wide application, such as LIDAR, flow meter.

Calculation Time-of-Flight (TOF)

With measurement mode 1, The TOF between the START to the nth STOP can be calculated using the below equation:

$$normLSB = \frac{T_{OSC_PERIOD}}{calCount} \qquad calCount = \frac{CALIBRATION2 - CALIBRATION1}{CALIBRATION2_{PERIODS} - 1}$$

$$TOF_n = TIME_n \times normLSB + T_{offset}$$

Where:

- TOF_n [sec] = time-of-flight measurement from the START to the nth STOP
- $TIME_n$ = n^{th} TIME measurement given by the TIME1 to TIME6 registers
- normLSB [sec] = normalized LSB value from calibration
- CLOCKperiod [sec] = external CLOCK period
- CALIBRATION1 [count] = TDC count for first calibration cycle
- CALIBRATION2 [count] = TDC count for second calibration cycle
- CALIBRATION2_PERIODS = setting for the second calibration cycle; located in register CONFIG2

With measurement mode 2, The TOF between the START to the nth STOP can be calculated using the below equation:

$$TOF_n = normLSB \times (TIME1 - TIME_{n+1}) + CLKCOUNTn \times T_{OSC_PERIOD}$$

$$normLSB = \frac{T_{OSC_PERIOD}}{calCount} \qquad calCount = \frac{CALIBRATION2 - CALIBRATION1}{CALIBRATION2_{PERIODS} - 1}$$

Where:

- TOF_n [sec] = time-of-flight measurement from the START to the n th STOP
- TIME1 = TIME1 register value = time 1 measurement given by the TMIS7701 register address 0x10.
- $TIME_{(n+1)}$ = $TIME_{(n+1)}$ register value = (n+1) time measurement, where n = 1 to 5 (TIME2 to TIME6 registers).
- normLSB [sec] = normalized LSB value from calibration.
- $CLOCK_COUNT_n$ = n^{th} clock count, where n = 1 to 5 (CLOCK_COUNT1 to CLOCK_COUNT5).
- CLOCKperiod [sec] = external CLOCK period.
- CALIBRATION1 = CALIBRATION1 register value = TDC count for first calibration cycle.
- CALIBRATION2 = CALIBRATION2 register value = TDC count for second calibration cycle.
- CALIBRATION2_PERIODS = setting for the second calibration; located in register TCONFIG2.

TOLL Microelectronic Inc.
www.toll-semi.com

13.Functional Block Diagram

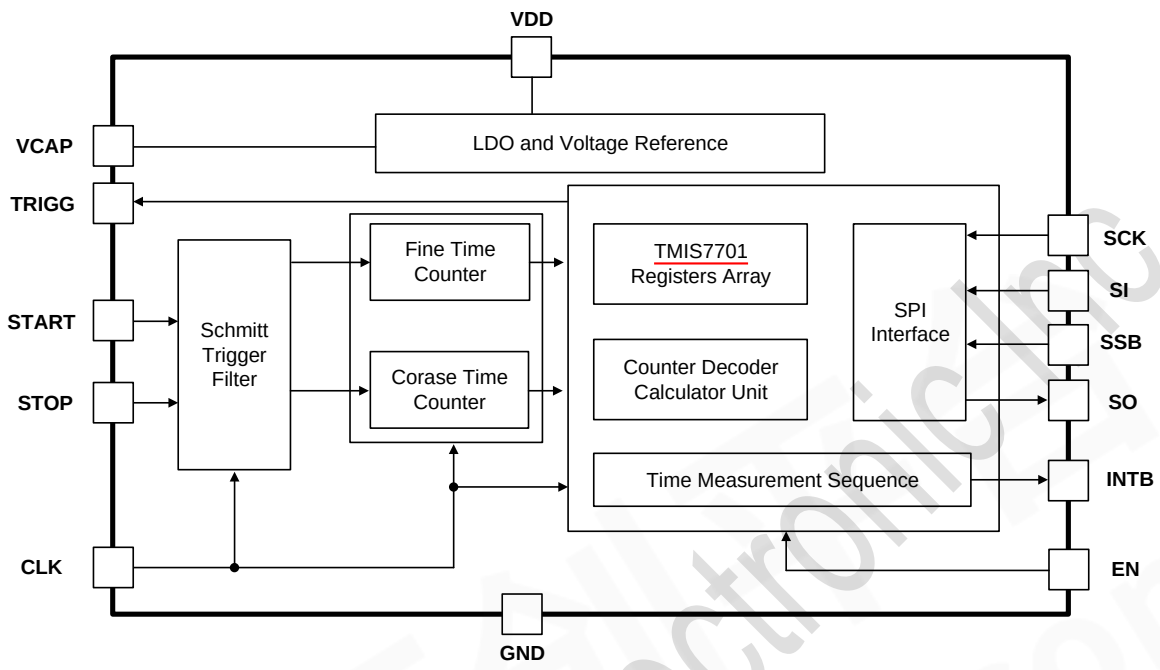

Figure 3. TMIS7701 Function Block Diagram

世强硬件 TOLL Microelectronic Inc. www.sekorm.com

14.Typical Characteristics

VDD = 3.3 V, GND = 0 V, CLOCK = 8 MHz, CALIBRATION2_PERIODS = 10, AVG_CYCLES = 1, one STOP signal.

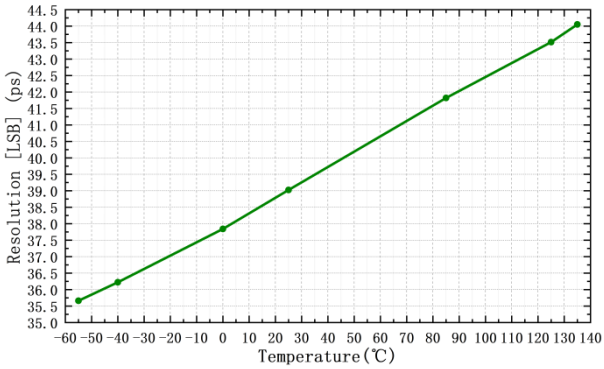

Figure 4. Resolution (LSB) vs. Temperature

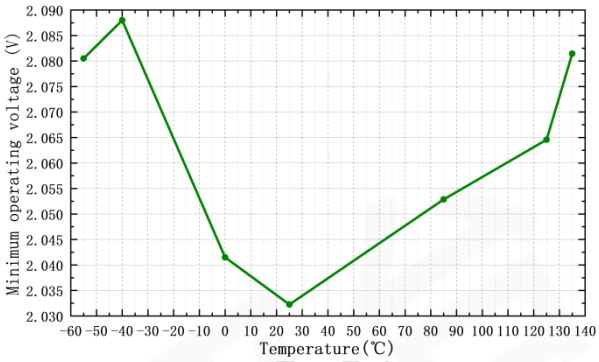

Figure 5. Minimum Operation Voltage vs. Temperature

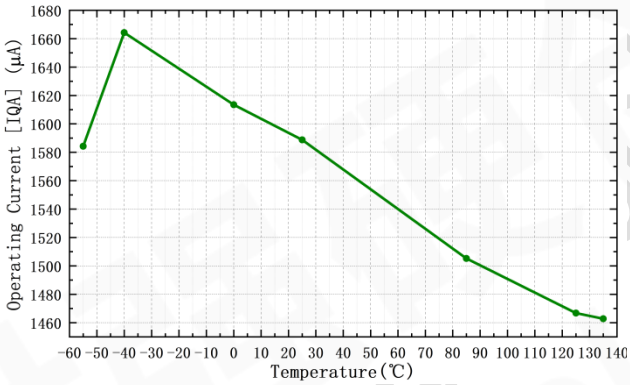

Figure 6. Operating Current (IQA) vs. Temperature

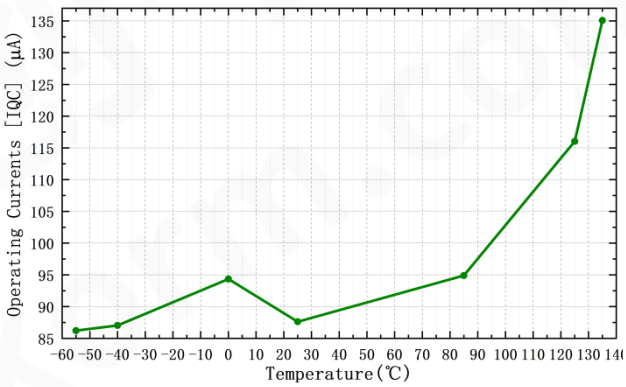

Figure 7. Operating Current (IQC) vs. Temperature

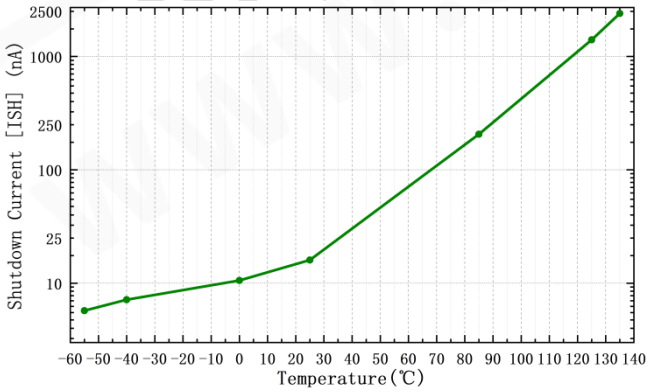

Figure 8. Shutdown Current (ISH) vs. Temperature

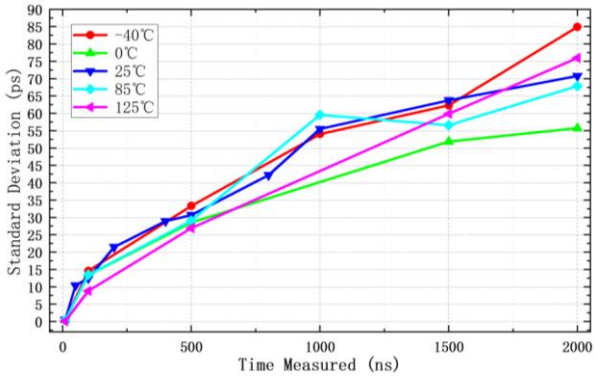

Figure 9. STDEV vs. Temperature & TOF (Measurement Mode 1)

14. Typical Characteristics

VDD = 3.3 V, GND = 0 V, CLOCK = 8 MHz, CALIBRATION2_PERIODS = 10, AVG_CYCLES = 1, one STOP signal.

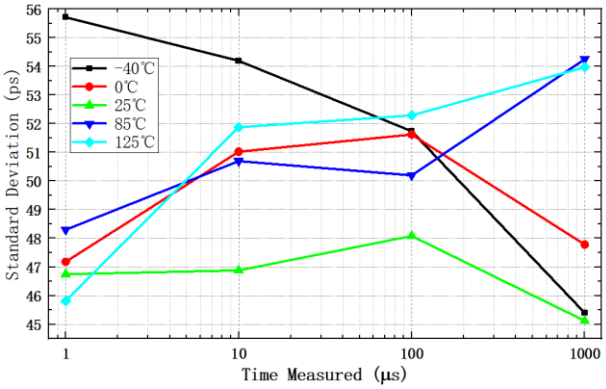

Figure 10. STDEV vs. Temperature & TOF (Measurement Mode 2)

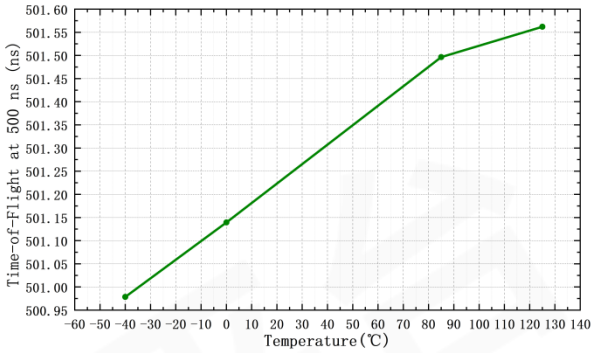

Figure 11. TOF vs. Temperature (Measurement Mode 1)

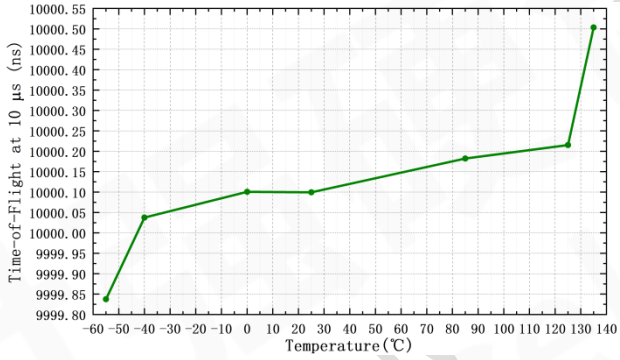

Figure 12. TOF vs. Temperature (Measurement Mode 2)

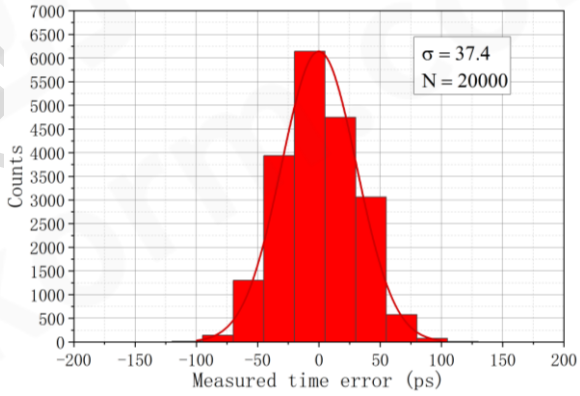

Figure 13. TOF Error Histogram (Measurement Mode 1, 500ns)

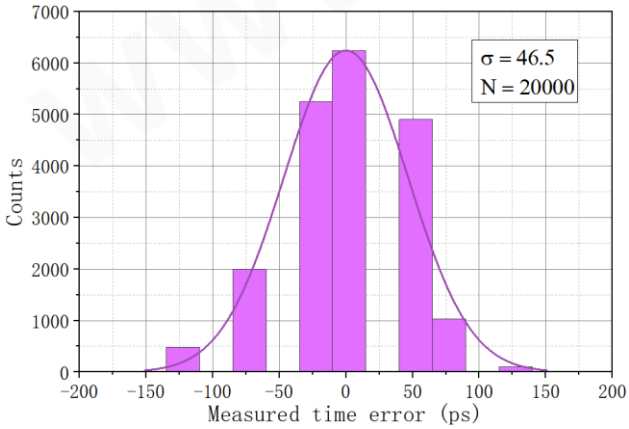

Figure 13. TOF Error Histogram (Measurement Mode 2, 10μs)

15.Register Array

Register Address	Register Name	Description	Bits	Reset Value
00h	CONFIG1	Configuration Register1	8	00h
01h	CONFIG2	Configuration Register2	8	40h
02h	INT_STATUS	Interrupt Status Register	8	00h
03h	INT_MASK	Interrupt Mask Register	8	07h
04h	COARSE_CNTR_OVF_H	Coarse Counter Overflow Value High	8	00h
05h	COARSE_CNTR_OVF_L	Coarse Counter Overflow Value Low	8	FFh
06h	CLOCK_CNTR_OVF_H	CLOCK Counter Overflow Value High	8	FFh
07h	CLOCK_CNTR_OVF_L	CLOCK Counter Overflow Value Low	8	FFh
08h	CLOCK_CNTR_STOP_MASK_H	CLOCK Counter STOP Mask High	8	00h
09h	CLOCK_CNTR_STOP_MASK_L	CLOCK Counter STOP Mask Low	8	00h
10h	TIME1	Measure Time 1	24	00_0000h
11h	CLOCK_COUNT1	CLOCK Counter Value	24	00_0000h
12h	TIME2	Measure Time 2	24	00_0000h
13h	CLOCK_COUNT2	CLOCK Counter Value	24	00_0000h
14h	TIME3	Measure Time 3	24	00_0000h
15h	CLOCK_COUNT3	CLOCK Counter Value	24	00_0000h
16h	TIME 4	Measure Time 4	24	00_0000h
17h	CLOCK_COUNT4	CLOCK Counter Value	24	00_0000h
18h	TIME 5	Measure Time 5	24	00_0000h
19h	CLOCK_COUNT5	CLOCK Counter Value	24	00_0000h
1Ah	TIME6	Measure Time 6	24	00_0000h
1Bh	CALIBRATION1	Calibration 1, 1 CLOCK Period	24	00_0000h
1Ch	CALIBRATION2	Calibration 2, 2/10/20/40 CLOCK Periods	24	00_0000h

Table 1. Register Summery

TOLL Microelectronic Inc.

CONFIG2: Configuration Register 2. R/W (address=00h) [reset=0h]

Table 2. Configuration Register 1

7	6	5	4	3	2	1	0
FORCE_CAL	PARITY_EN	TRIGG_EDGE	STOP_EDGE	START_EDGE	MEAS_MODE		START_MEAS
R/W-0h	R/W-0h	R/W-0h	R/W-0h	R/W-0h	R/W-0h	R/W-0h	R/W-0h

R/W=Read/Write; R=Read Only; -n=value after reset

Table 3. Configuration Register 1

Bit	Field	Type	Reset	Description
7	FORCE_CAL	R/W	0	0: Calibration is not performed after interrupted measurement (for example, due to counter overflow or missing STOP signal) 1: Calibration is always performed at the end (for example, after a counter overflow)
6	PARITY_EN	R/W	0	0: Parity bit for Measurement Result Registers* disabled (Parity Bit always 0) 1: Parity bit for Measurement Result Registers enabled (Even Parity) *The Measurement Results registers are the TIME1 to TIME6, CLOCK_COUNT1 to CLOCK_COUNT5, CALIBRATION1, CALIBRATION2 registers.
5	TRIGG_EDGE	R/W	0	0: TRIGG is output as a Rising edge signal 1: TRIGG is output as a Falling edge signal
4	STOP_EDGE	R/W	0	0: Measurement is stopped on Rising edge of STOP signal 1: Measurement is stopped on Falling edge of STOP signal
3	START_EDGE	R/W	0	0: Measurement is started on Rising edge of START signal 1: Measurement is started on Falling edge of START signal
[2:1]	MEAS_MODE	R/W	00h	00: Measurement Mode 1 (for expected time-of-flight < 2µs). 01: Measurement Mode 2 (recommended, for expected time-of-flight < 8ms) 10: Measurement Mode 3 (internal 20ns delay and support time of flight 0ns) 11: Measurement Mode 4 (support maximum 1s time-of-flight, but the inner auto average mode measurement times is limited)
0	START_MEAS	R/W	0	Start New Measurement: This bit is cleared when Measurement is Completed. 0：No effect 1：Start New Measurement. Writing a 1 will clear all bits in the Interrupt Status Register and Start the measurement (by generating an TRIGG signal) and will reset the content of all Measurement Results registers.

CONFIG2: Configuration Register 2. R/W (address=01h) [reset=40h]

Table 4. Configuration Register 2

7	6	5	4	3	2	1	0
CALIBRATION2_PERIODS		AVG_CYCLES			NUM_STOP		
R/W-0h	R/W-1h	R/W-0h	R/W-0h	R/W-0h	R/W-0h	R/W-0h	R/W-0h

R/W=Read/Write; R=Read Only; -n=value after reset

Table 5. Configuration Register 2

Bit	Field	Type	Reset	Description
[7:6]	CALIBRATION2_PERIODS	R/W	01h	00: Calibration 2 - measuring 2 CLOCK periods ODS 01: Calibration 2 - measuring 10 CLOCK periods 10: Calibration 2 - measuring 20 CLOCK periods 11: Calibration 2 - measuring 40 CLOCK periods
[5:3]	AVG_CYCLES	R/W	00h	Internal multi-cycle averaging mode. The interrupt is send after a series of measurements is finished. 000: 1 Measurement Cycle only 001: 2 Measurement Cycles 010: 4 Measurement Cycles 011: 8 Measurement Cycles 100: 16 Measurement Cycles 101: 32 Measurement Cycles 110: 64 Measurement Cycles 111: 128 Measurement Cycles
[2:0]	NUM_STOP	R/W	00h	000: Single Stop 001: Two Stops 010: Three Stops 011: Four Stops 100: Five Stops 101, 110, 111: No Effect. Single Stop

TOLL Microelectronic Inc.
www.toll-semi.com

INT_STATUS: Interrupt Status Register. R/W (address=02h) [reset=00h]

Table 6. Interrupt Status Register

7	6	5	4	3	2	1	0
Reserved	Reserved	Reserved	MEAS_COMP _FLAG	MEAS_STARTED _FLAG	CLK_CNTR _OVF_INT	COARSE_CNTR _OVF_INT	NEW_MEAS _INT
R/W-0h	R/W-0h	R/W-0h	R/W-0h	R/W-0h	R/W-0h	R/W-0h	R/W-0h

R/W=Read/Write; R=Read Only; -n=value after reset

Table 7. Interrupt Status Register Field Description

Bit	Field	Type	Reset	Description
7	Reserved	R/W	0	
6	Reserved	R/W	0	
5	Reserved	R/W	0	
4	MEAS_COMP _FLAG	R/W	0	Writing a 1 will clear the status 0: Measurement has not completed 1: Measurement has completed
3	MEAS_STARTED _FLAG	R/W	0	Writing a 1 will clear the status 0: Measurement has not started 1: Measurement has started (START signal received)
2	CLK_CNTR _OVF_INT	R/W	0	Requires writing a 1 to clear interrupt status 0: No overflow detected 1: Clock overflow detected, running measurement will be stopped immediately
1	COARSE_CNTR _OVF_INT	R/W	0	Requires writing a 1 to clear interrupt status 0: No overflow detected 1: Coarse overflow detected, running measurement will be stopped immediately
0	NEW_MEAS _INT	R/W	0	Requires writing a 1 to clear interrupt status 0: Interrupt not detected 1: Interrupt detected – New Measurement has been completed

INT_MASK: Interrupt Mask Register. R/W (address=03h) [reset=07h]

Table 8. Interrupt Mask Register

7	6	5	4	3	2	1	0
Reserved	Reserved	Reserved	Reserved	Reserved	CLOCK_CNTR _OVF_MASK	COARSE_CNTR _OVF_MASK	NEW_MEAS _MASK
R/W-0h	R/W-0h	R/W-0h	R/W-0h	R/W-0h	R/W-1h	R/W-1h	R/W-1h

R/W=Read/Write; R=Read Only; -n=value after reset

Table 9. Interrupt Mask Register Field Description

Bit	Field	Type	Reset	Description
7	Reserved	R/W	0	
6	Reserved	R/W	0	
5	Reserved	R/W	0	
4	Reserved	R/W	0	
3	Reserved	R/W	0	
2	CLOCK_CNTR_OVF_MASK	R/W	1	0: CLOCK Counter Overflow Interrupt disabled 1: CLOCK Counter Overflow Interrupt enabled
1	COARSE_CNTR_OVF_MASK	R/W	1	0: Coarse Counter Overflow Interrupt disabled 1: Coarse Counter Overflow Interrupt enabled
0	NEW_MEAS_MASK	R/W	1	0: New Measurement Interrupt disabled 1: New Measurement Interrupt enabled

TOLL Microelectronic Inc.
www.sekorm.com

COARSE_CNTR_OVF_H: Coarse Counter Overflow High Value Register (address = 04h) [reset=FFh]

Table 10. Coarse Counter Overflow High Value Register

7	6	5	4	3	2	1	0
COARSE_CNTR_OVF_H							
R/W-1h	R/W-1h	R/W-1h	R/W-1h	R/W-1h	R/W-1h	R/W-1h	R/W-1h

R/W=Read/Write; R=Read Only; -n=value after reset

Table 11. Coarse Counter Overflow High Value Register Field Description

Bit	Field	Type	Reset	Description
7:0	COARSE_CNTR_OVF_H	R/W	FFh	Coarse Counter Overflow Value, higher 8 Bit

COARSE_CNTR_OVF_L: Coarse Counter Overflow Low Value Register (address = 05h) [reset=FFh]

Table 12. Coarse Counter Overflow Low Value Register

7	6	5	4	3	2	1	0
COARSE_CNTR_OVF_L							
R/W-1h	R/W-1h	R/W-1h	R/W-1h	R/W-1h	R/W-1h	R/W-1h	R/W-1h

R/W=Read/Write; R=Read Only; -n=value after reset

Table 13. Coarse Counter Overflow Low Value Register Field Description

Bit	Field	Type	Reset	Description
7:0	COARSE_CNTR_OVF_L	R/W	FFh	Coarse Counter Overflow Value, lower 8 Bit Note: Don't set COARSE_CNTR_OVF_L to 1.

TOLL Microelectronic Inc www.sekorm.com

CLOCK_CNTR_OVF_H: Clock Counter Overflow High Register (address = 06h) [reset = FFh]

Table 14. Clock Counter Overflow High Register

7	6	5	4	3	2	1	0
CLOCK_CNTR_OVF_H							
R/W-1h	R/W-1h	R/W-1h	R/W-1h	R/W-1h	R/W-1h	R/W-1h	R/W-1h

R/W=Read/Write; R=Read Only; -n=value after reset

Table 15. Clock Counter Overflow High Register Field Description

Bit	Field	Type	Reset	Description
7:0	CLOCK_CNTR_OVF_H	R/W	FFh	CLOCK Counter Overflow Value, upper 8 Bit

CLOCK_CNTR_OVF_L: Clock Counter Overflow High Register (address = 07h) [reset = FFh]

Table 16. Clock Counter Overflow High Register

7	6	5	4	3	2	1	0
CLOCK_CNTR_OVF_L							
R/W-1h	R/W-1h	R/W-1h	R/W-1h	R/W-1h	R/W-1h	R/W-1h	R/W-1h

R/W=Read/Write; R=Read Only; -n=value after reset

Table 17. Clock Counter Overflow High Register Field Description

Bit	Field	Type	Reset	Description
7:0	CLOCK_CNTR_OVF_L	R/W	FFh	CLOCK Counter Overflow Value, lower 8 Bit

世强 TOLL Microelectronic Inc. www.sekorm.com

CLOCK_CNTR_STOP_MASK_H: CLOCK Counter STOP Mask High Value Register (address = 08h) [reset = 00h]

Table 18. CLOCK Counter STOP Mask High Value Register

7	6	5	4	3	2	1	0
CLOCK_CNTR_STOP_MASK_H							
R/W-0h	R/W-0h	R/W-0h	R/W-0h	R/W-0h	R/W-0h	R/W-0h	R/W-0h

R/W=Read/Write; R=Read Only; -n=value after reset

Table 19. CLOCK Counter STOP Mask High Value Register Field Description

Bit	Field	Type	Reset	Description
7:0	CLOCK_CNTR_STOP_MASK_H	R/W	00h	CLOCK Counter STOP Mask, upper 8 Bit

CLOCK_CNTR_STOP_MASK_L: CLOCK Counter STOP Mask Low Value Register (address = 09h) [reset = 00h]

Table 20. CLOCK Counter STOP Mask Low Value Register

7	6	5	4	3	2	1	0
CLOCK_CNTR_STOP_MASK_L							
R/W-0h	R/W-0h	R/W-0h	R/W-0h	R/W-0h	R/W-0h	R/W-0h	R/W-0h

R/W=Read/Write; R=Read Only; -n=value after reset

Table 21. CLOCK Counter STOP Mask Low Value Register Field Description

Bit	Field	Type	Reset	Description
7:0	CLOCK_CNTR_STOP_MASK_L	R/W	00h	CLOCK Counter STOP Mask, lower 8 Bit

TIME1: Time 1 Register (address: 10h) [reset = 00_0000h]

Table 22. TIME1 Register

23	22	21	20	19	18	17	16	15	14	13	12	11	10	9	8	7	6	5	4	3	2	1	0
Parity Bit	Measurement Result: 23 bit integer value (Bit 22: MSB, Bit 0: LSB)																						
R-0	R-0	R-0	R-0	R-0	R-0	R-0	R-0	R-0	R-0	R-0	R-0	R-0	R-0	R-0	R-0	R-0	R-0	R-0	R-0	R-0	R-0	R-0	R-0

R/W=Read/Write; R=Read Only; -n=value after reset

Table 23. TIME 1 Register Field Descriptions

Bit	Field	Type	Reset	Description
23	Parity Bit	R	0	Parity Bit
22-0	Measurement Result: 23 bit integer value (Bit 22: MSB, Bit 0: LSB)	R	0	Measurement Result

CLOCK_COUNT1: Clock Count Register (address: 11h) [reset = 00_0000h]

Table 24. CLOCK_COUNT1

23	22	21	20	19	18	17	16	15	14	13	12	11	10	9	8	7	6	5	4	3	2	1	0
Parity Bit								CLOCK_COUNT1 Result															
R-0	R-0	R-0	R-0	R-0	R-0	R-0	R-0	R-0	R-0	R-0	R-0	R-0	R-0	R-0	R-0	R-0	R-0	R-0	R-0	R-0	R-0	R-0	R-0

R/W=Read/Write; R=Read Only; -n=value after reset

Table 25. CLOCK_COUNT1 Field Description

Bit	Field	Type	Reset	Description
23	Parity Bit	R	0	Parity Bit
22-16	Not Used	R	0	Measurement Result
15-0	CLOCK_COUNT1 Measurement Result Result	R	0	CLOCK_COUNT1 Measurement Result

TIME2: Time 2 Register (address: 12h) [reset = 00_0000h]

Table 26. TIME 2 Register

23	22	21	20	19	18	17	16	15	14	13	12	11	10	9	8	7	6	5	4	3	2	1	0
Parity Bit	Measurement Result: 23 bit integer value (Bit 22: MSB, Bit 0: LSB)																						
R-0	R-0	R-0	R-0	R-0	R-0	R-0	R-0	R-0	R-0	R-0	R-0	R-0	R-0	R-0	R-0	R-0	R-0	R-0	R-0	R-0	R-0	R-0	R-0

R/W=Read/Write; R=Read Only; -n=value after reset

Table 27. TIME 2 Register Field Descriptions

Bit	Field	Type	Reset	Description
23	Parity Bit	R	0	Parity Bit
22-0	Measurement Result: 23 bit integer value (Bit 22: MSB, Bit 0: LSB)	R	0	Measurement Result

CLOCK_COUNT2: Clock Count Register (address: 13h) [reset = 00_0000h]

Table 28. CLOCK_COUNT2

23	22	21	20	19	18	17	16	15	14	13	12	11	10	9	8	7	6	5	4	3	2	1	0
Parity Bit								CLOCK_COUNT2 Result															
R-0	R-0	R-0	R-0	R-0	R-0	R-0	R-0	R-0	R-0	R-0	R-0	R-0	R-0	R-0	R-0	R-0	R-0	R-0	R-0	R-0	R-0	R-0	R-0

R/W=Read/Write; R=Read Only; -n=value after reset

Table 29. CLOCK_COUNT2 Field Description

Bit	Field	Type	Reset	Description
23	Parity Bit	R	0	Parity Bit
22-16	Not Used	R	0	Measurement Result
15-0	CLOCK_COUNT2 Measurement Result Result	R	0	CLOCK_COUNT2 Measurement Result

TIME3: Time 3 Register (address: 14h) [reset = 00_0000h]

Table 30. TIME 3 Register

23	22	21	20	19	18	17	16	15	14	13	12	11	10	9	8	7	6	5	4	3	2	1	0
Parity Bit	Measurement Result: 23 bit integer value (Bit 22: MSB, Bit 0: LSB)																						
R-0	R-0	R-0	R-0	R-0	R-0	R-0	R-0	R-0	R-0	R-0	R-0	R-0	R-0	R-0	R-0	R-0	R-0	R-0	R-0	R-0	R-0	R-0	R-0

R/W=Read/Write; R=Read Only; -n=value after reset

Table 31. TIME 3 Register Field Descriptions

Bit	Field	Type	Reset	Description
23	Parity Bit	R	0	Parity Bit
22-0	Measurement Result: 23 bit integer value (Bit 22: MSB, Bit 0: LSB)	R	0	Measurement Result

CLOCK_COUNT3: Clock Count Register (address: 15h) [reset = 00_0000h]

Table 32. CLOCK_COUNT3

23	22	21	20	19	18	17	16	15	14	13	12	11	10	9	8	7	6	5	4	3	2	1	0
Parity Bit								CLOCK_COUNT3 Result															
R-0	R-0	R-0	R-0	R-0	R-0	R-0	R-0	R-0	R-0	R-0	R-0	R-0	R-0	R-0	R-0	R-0	R-0	R-0	R-0	R-0	R-0	R-0	R-0

R/W=Read/Write; R=Read Only; -n=value after reset

Table 33. CLOCK_COUNT3 Field Description

Bit	Field	Type	Reset	Description
23	Parity Bit	R	0	Parity Bit
22-16	Not Used	R	0	Measurement Result
15-0	CLOCK_COUNT3 Measurement Result Result	R	0	CLOCK_COUNT3 Measurement Result

TIME4: Time 4 Register (address: 16h) [reset = 00_0000h]

Table 34. TIME 4 Register

23	22	21	20	19	18	17	16	15	14	13	12	11	10	9	8	7	6	5	4	3	2	1	0
Parity Bit	Measurement Result: 23 bit integer value (Bit 22: MSB, Bit 0: LSB)																						
R-0	R-0	R-0	R-0	R-0	R-0	R-0	R-0	R-0	R-0	R-0	R-0	R-0	R-0	R-0	R-0	R-0	R-0	R-0	R-0	R-0	R-0	R-0	R-0

R/W=Read/Write; R=Read Only; -n=value after reset

Table 35. TIME 4 Register Field Descriptions

Bit	Field	Type	Reset	Description
23	Parity Bit	R	0	Parity Bit
22-0	Measurement Result: 23 bit integer value (Bit 22: MSB, Bit 0: LSB)	R	0	Measurement Result

CLOCK_COUNT4: Clock Count Register (address: 17h) [reset = 00_0000h]

Table 36. CLOCK_COUNT4

23	22	21	20	19	18	17	16	15	14	13	12	11	10	9	8	7	6	5	4	3	2	1	0
Parity Bit								CLOCK_COUNT4 Result															
R-0	R-0	R-0	R-0	R-0	R-0	R-0	R-0	R-0	R-0	R-0	R-0	R-0	R-0	R-0	R-0	R-0	R-0	R-0	R-0	R-0	R-0	R-0	R-0

R/W=Read/Write; R=Read Only; -n=value after reset

Table 37. CLOCK_COUNT4 Field Description

Bit	Field	Type	Reset	Description
23	Parity Bit	R	0	Parity Bit
22-16	Not Used	R	0	Measurement Result
15-0	CLOCK_COUNT4 Measurement Result Result	R	0	CLOCK_COUNT4 Measurement Result

TIME5: Time 5 Register (address: 18h) [reset = 00_0000h]

Table 38. TIME 5 Register

23	22	21	20	19	18	17	16	15	14	13	12	11	10	9	8	7	6	5	4	3	2	1	0
Parity Bit	Measurement Result: 23 bit integer value (Bit 22: MSB, Bit 0: LSB)																						
R-0	R-0	R-0	R-0	R-0	R-0	R-0	R-0	R-0	R-0	R-0	R-0	R-0	R-0	R-0	R-0	R-0	R-0	R-0	R-0	R-0	R-0	R-0	R-0

R/W=Read/Write; R=Read Only; -n=value after reset

Table 39. TIME 5 Register Field Descriptions

Bit	Field	Type	Reset	Description
23	Parity Bit	R	0	Parity Bit
22-0	Measurement Result: 23 bit integer value (Bit 22: MSB, Bit 0: LSB)	R	0	Measurement Result

CLOCK_COUNT5: Clock Count Register (address: 19h) [reset = 00_0000h]

Table 40. CLOCK_COUNT5

23	22	21	20	19	18	17	16	15	14	13	12	11	10	9	8	7	6	5	4	3	2	1	0
Parity Bit								CLOCK_COUNT5 Result															
R-0	R-0	R-0	R-0	R-0	R-0	R-0	R-0	R-0	R-0	R-0	R-0	R-0	R-0	R-0	R-0	R-0	R-0	R-0	R-0	R-0	R-0	R-0	R-0

R/W=Read/Write; R=Read Only; -n=value after reset

Table 41. CLOCK_COUNT5 Field Description

Bit	Field	Type	Reset	Description
23	Parity Bit	R	0	Parity Bit
22-16	Not Used	R	0	Measurement Result
15-0	CLOCK_COUNT5 Measurement Result Result	R	0	CLOCK_COUNT5 Measurement Result

TIME6: Time 6 Register (address: 1Ah) [reset = 00_0000h]

Table 42. TIME 6 Register

23	22	21	20	19	18	17	16	15	14	13	12	11	10	9	8	7	6	5	4	3	2	1	0
Parity Bit	Measurement Result: 23 bit integer value (Bit 22: MSB, Bit 0: LSB)																						
R-0	R-0	R-0	R-0	R-0	R-0	R-0	R-0	R-0	R-0	R-0	R-0	R-0	R-0	R-0	R-0	R-0	R-0	R-0	R-0	R-0	R-0	R-0	R-0

R/W=Read/Write; R=Read Only; -n=value after reset

Table 43. TIME 6 Register Field Descriptions

Bit	Field	Type	Reset	Description
23	Parity Bit	R	0	Parity Bit
22-0	Measurement Result: 23 bit integer value (Bit 22: MSB, Bit 0: LSB)	R	0	Measurement Result

CALIBRATION1: Calibration 1 Register (address: 1Bh) [reset = 00_0000h]

Table 44. CALIBRATION1 Register

23	22	21	20	19	18	17	16	15	14	13	12	11	10	9	8	7	6	5	4	3	2	1	0
Parity Bit	Calibration 1																						
R-0	R-0	R-0	R-0	R-0	R-0	R-0	R-0	R-0	R-0	R-0	R-0	R-0	R-0	R-0	R-0	R-0	R-0	R-0	R-0	R-0	R-0	R-0	R-0

R/W=Read/Write; R=Read Only; -n=value after reset

Table 45. CALIBRATION1 Field Description

Bit	Field	Type	Reset	Description
23	Parity Bit	R	0	Parity Bit
22-0	Calibration1	R	0	Calibration 1 Result: 23 bit integer value (Bit 22: MSB, Bit 0: LSB)

CALIBRATION2: Calibration 2 Register (address: 1Ch) [reset = 00_0000h]

Table 46. CALIBRATION2 Register

23	22	21	20	19	18	17	16	15	14	13	12	11	10	9	8	7	6	5	4	3	2	1	0
Parity Bit	Calibration 2																						
R-0	R-0	R-0	R-0	R-0	R-0	R-0	R-0	R-0	R-0	R-0	R-0	R-0	R-0	R-0	R-0	R-0	R-0	R-0	R-0	R-0	R-0	R-0	R-0

R/W=Read/Write; R=Read Only; -n=value after reset

Table 47. CALIBRATION2 Register Field Description

Bit	Field	Type	Reset	Description
23	Parity Bit	R	0	Parity Bit
22-0	Calibration1	R	0	Calibration 2 Result: 23 bit integer value (Bit 22: MSB, Bit 0: LSB)

16.PACKAGE INFORMATION

TSSOP14

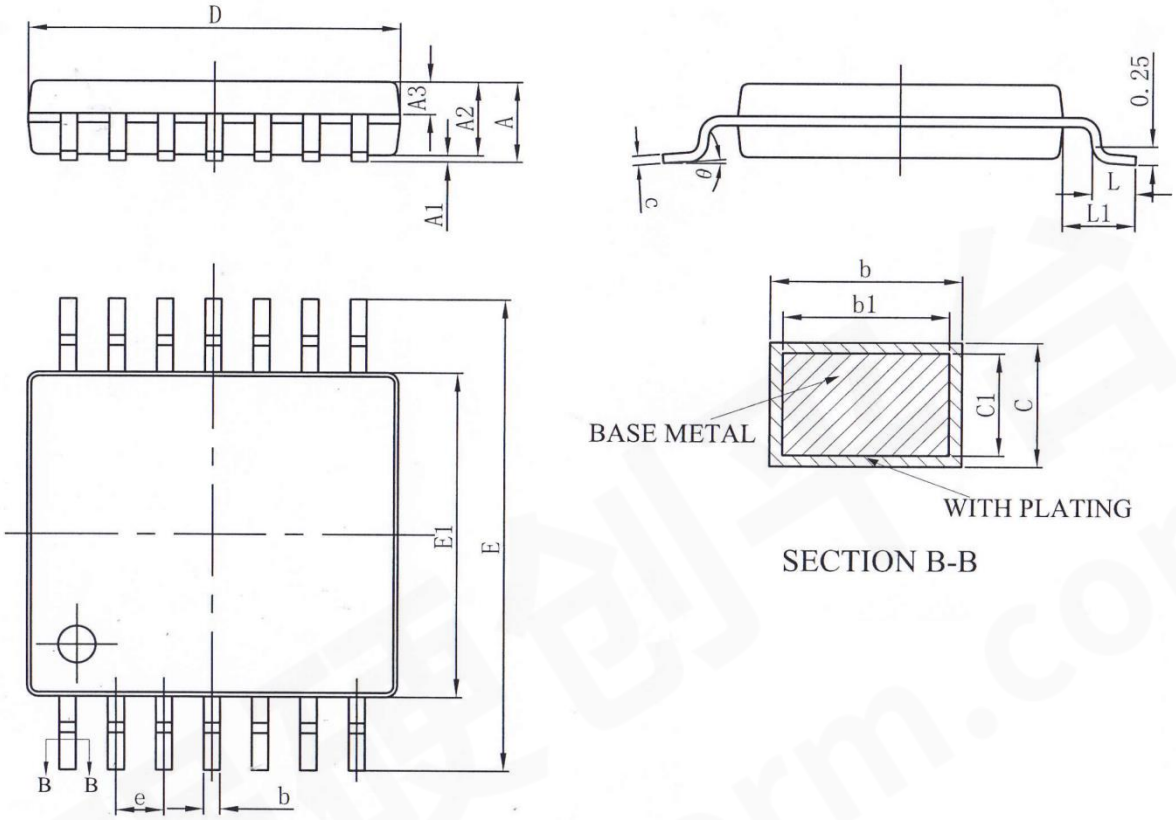

Unit: mm

Symbol	Dimensions In Millimeters			Symbol	Dimensions In Millimeters		
	Min	NOM	Max		Min	NOM	Max
A	-	-	1.20	c1	0.12	0.13	0.14
A1	0.05	-	0.15	D	4.90	5.00	5.10
A2	0.90	1.00	1.05	E	6.20	6.40	6.60
A3	0.39	0.44	0.49	E1	4.30	4.40	4.50
b	0.20	-	0.28	e	0.65BSC		
b1	0.19	0.22	0.25	L	0.45	-	0.75
c	0.13	-	0.17	L1	1.00BSC		
θ	0	-	8°	E2	2.80REF		
D2	2.80REF						

Note:

1) All dimensions are in millimeters.

17.TAPE AND REEL INFORMATION

TAPE DIMENSIONS: TSSOP16

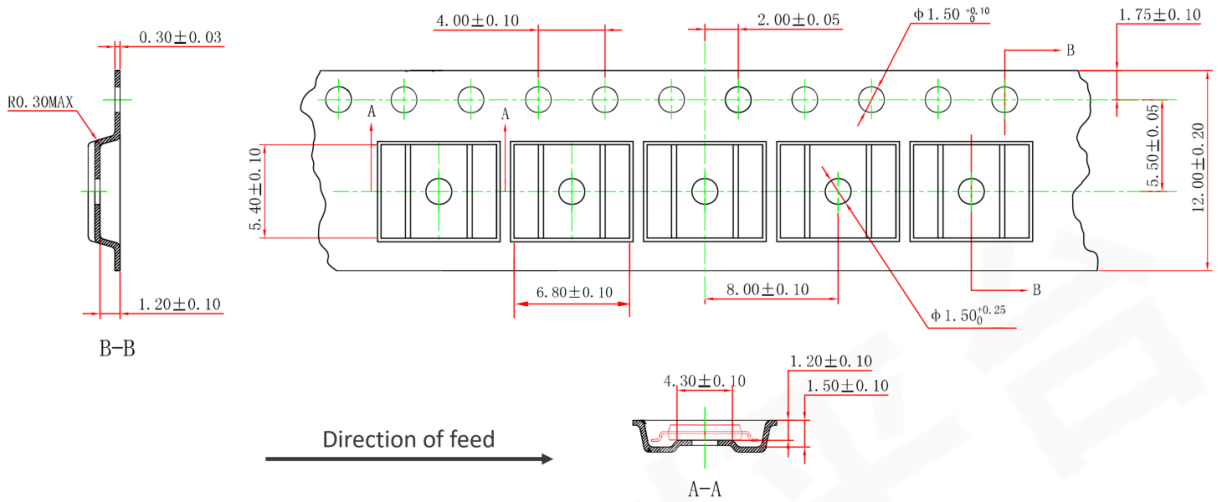

REEL DIMENSIONS: TSSOP16

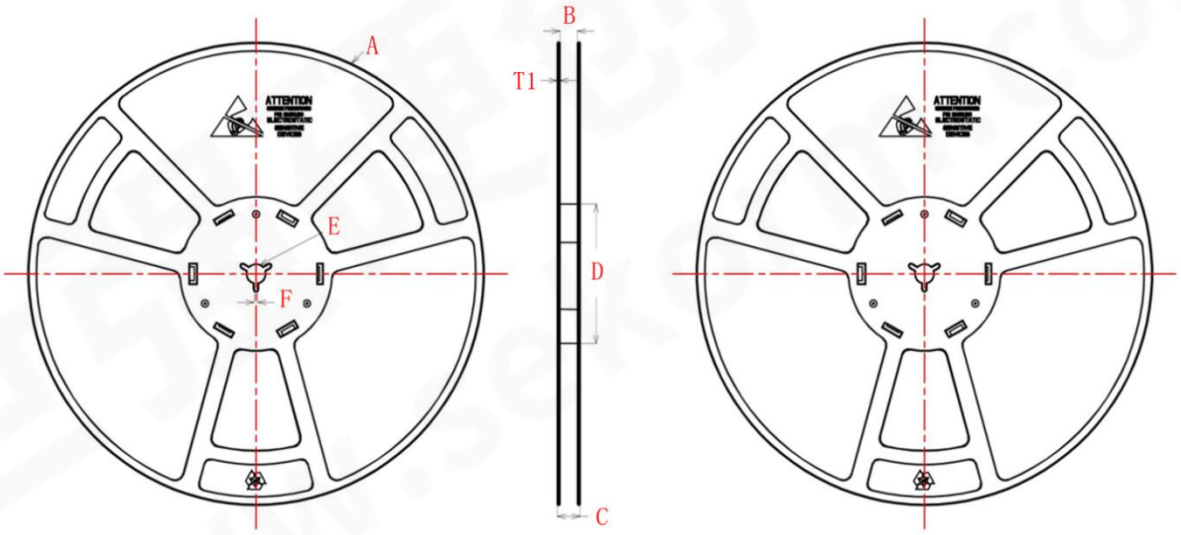

Unit: mm

A	B	C	D	E	F	T1
Ø 330±1.0	$12.4^{+1.0}_{-0.0}$	$17.6^{+1.0}_{-0.0}$	Ø 100.0±0.5	Ø 13.0±0.2	1.9±0.4	1.9±0.2

Note:

1) All Dimensions are in Millimeter
2) Quantity of Units per Reel is 4000
3) MSL level is level 3.

Important Notification

This document only provides product information. Xi'an TOLL Microelectronic Inc. (TMI) reserves the right to make corrections, modifications, enhancements, improvements, and other changes to its products and to discontinue any product without notice at any time.

Xi'an TOLL Microelectronic Inc. (TMI) cannot assume responsiIN2lity for use of any circuitry other than circuitry entirely embodied in a TMI product. No circuit patent licenses are implied.

All rights are reserved by TOLL Microelectronic Inc.

http:// www.toll-semi.com

世强硬件 TOLL Microelectronic Inc. www.sekorm.com