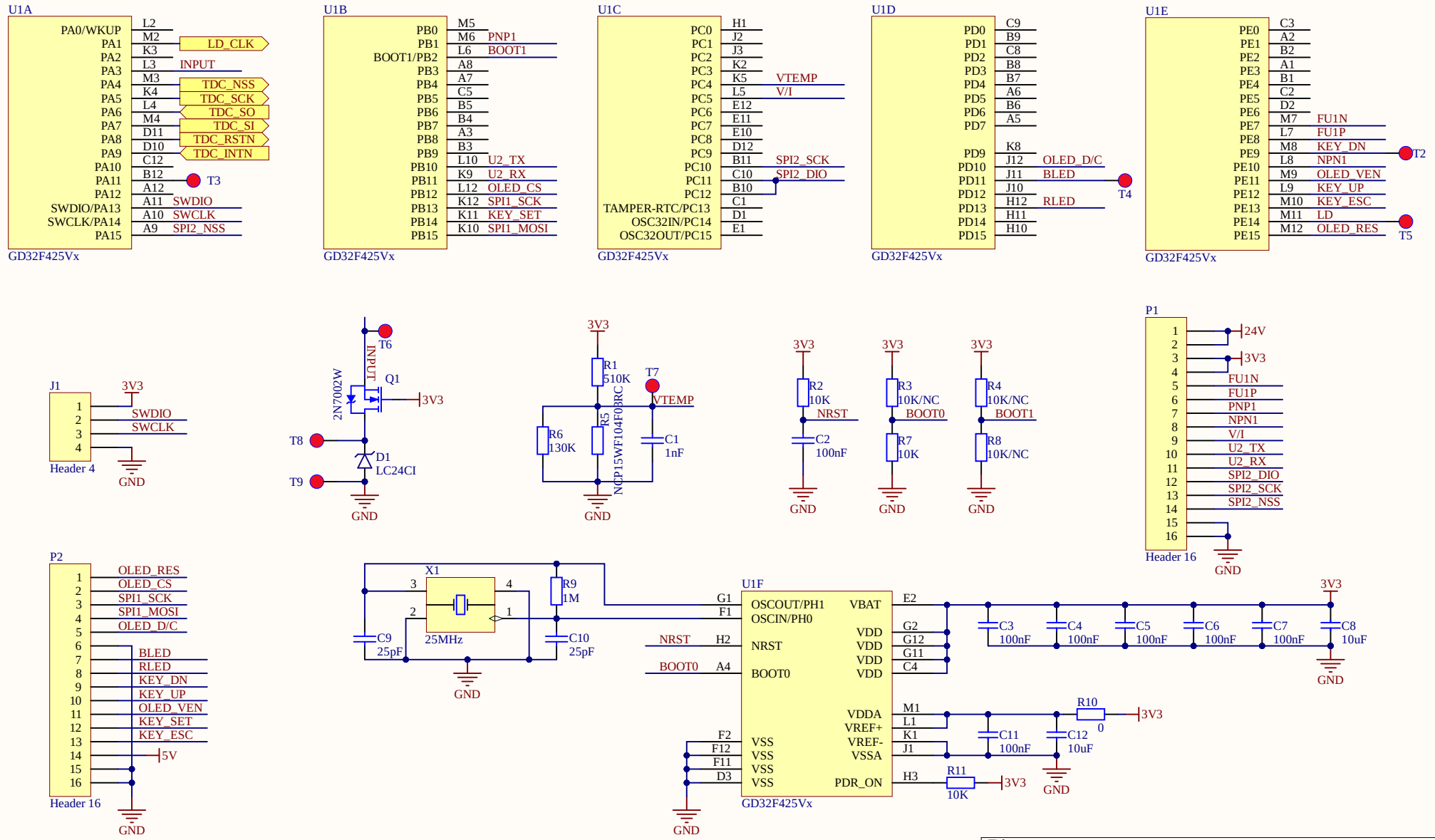

Title		
Size A4	Number	Revision
Date: 9/28/2024		Sheet of
File: D:\Desktop\..\GD32F425.SchDoc		Drawn By:

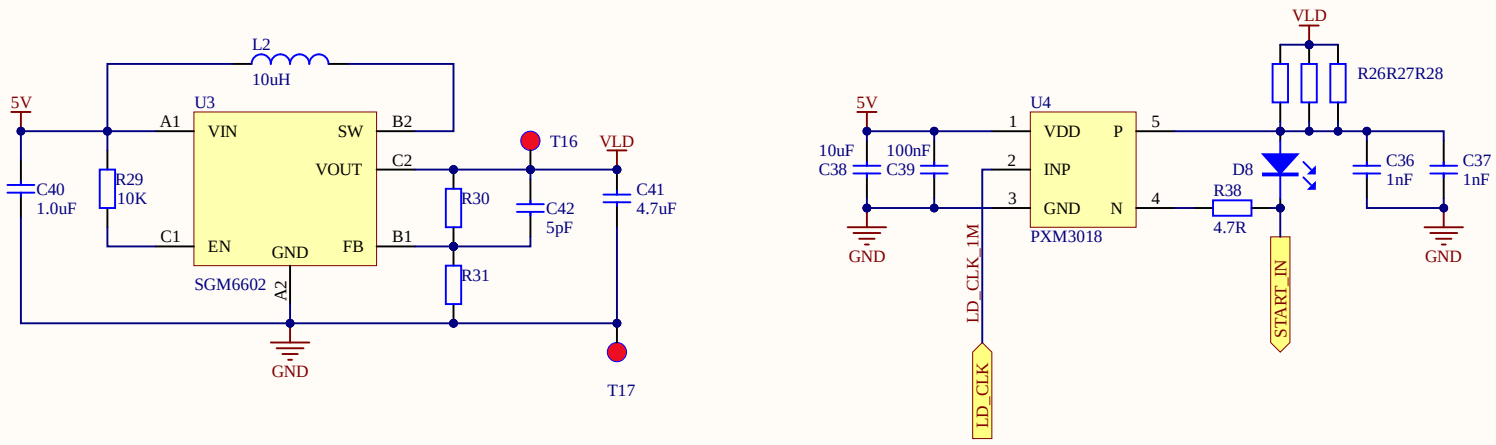

Title		
Size A4	Number	Revision
Date: 9/28/2024		Sheet of
File: D:\Desktop\..\LD_Driver.SchDoc		Drawn By:

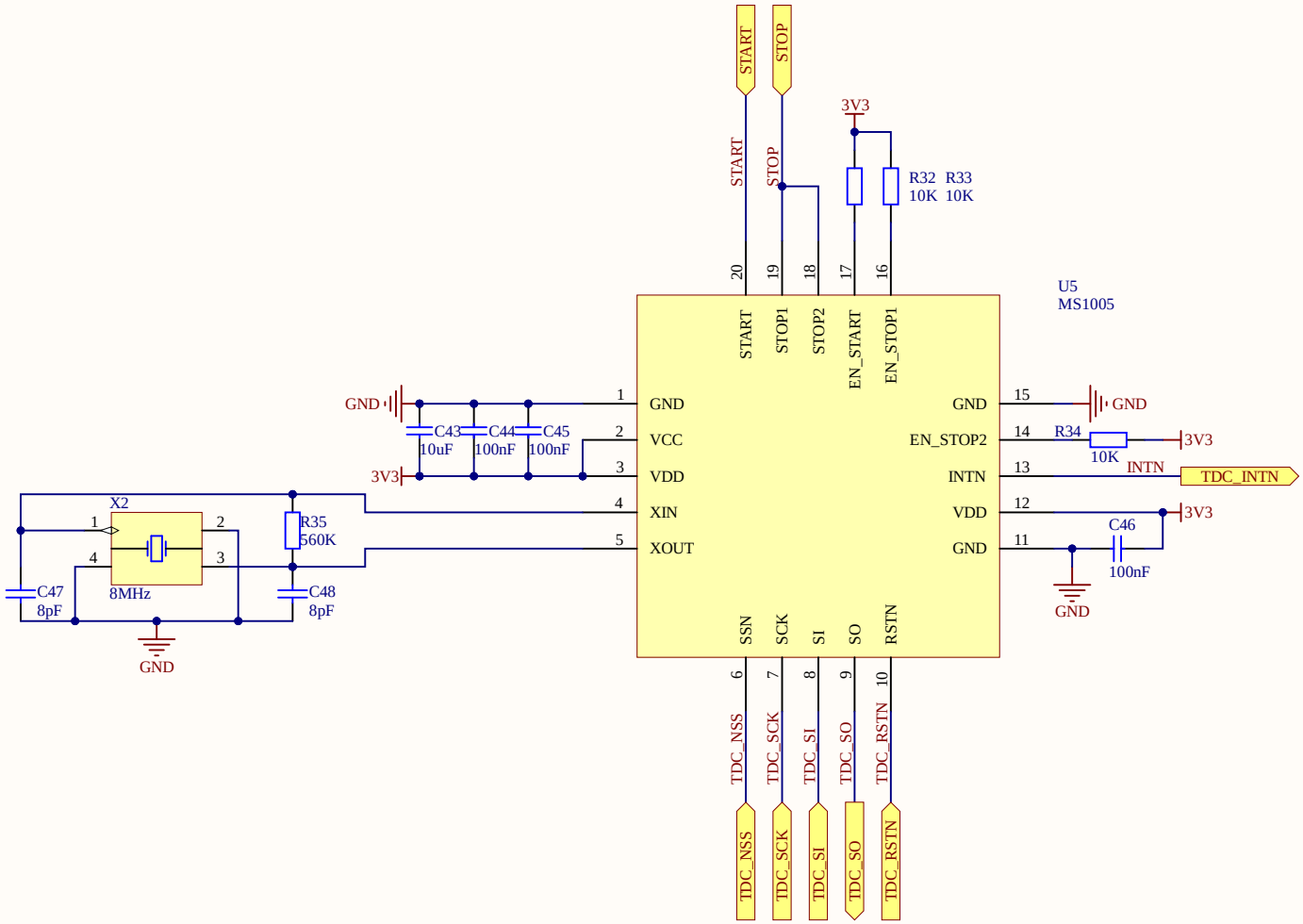

Title		
Size A4	Number	Revision
Date: 9/28/2024		Sheet of
File: D:\Desktop\..\MS1005.SchDoc		Drawn By:

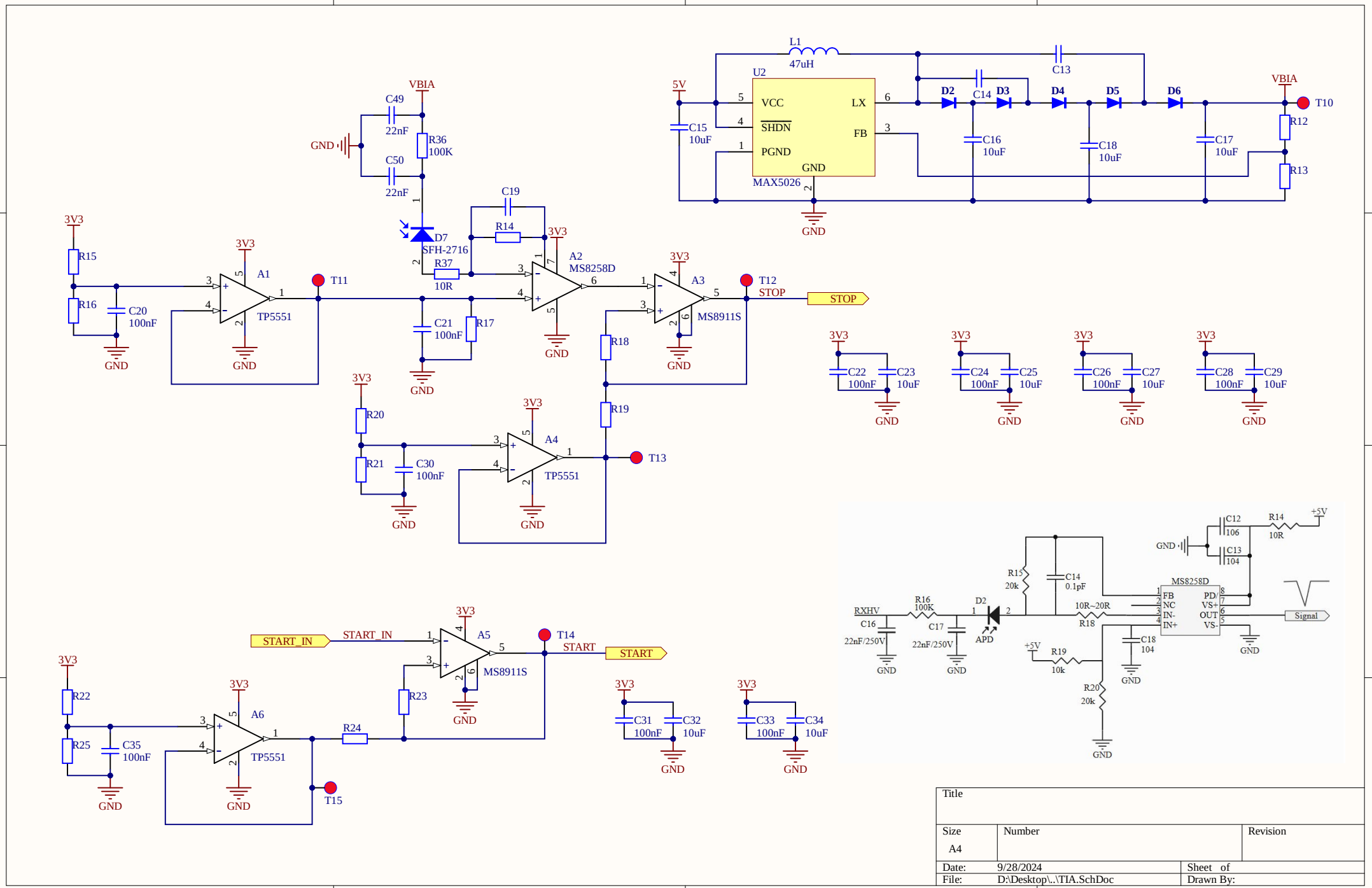

Title		
Size A4	Number	Revision
Date: 9/28/2024		Sheet of
File: D:\Desktop\..\TIA.SchDoc		Drawn By:

Board Stack Report