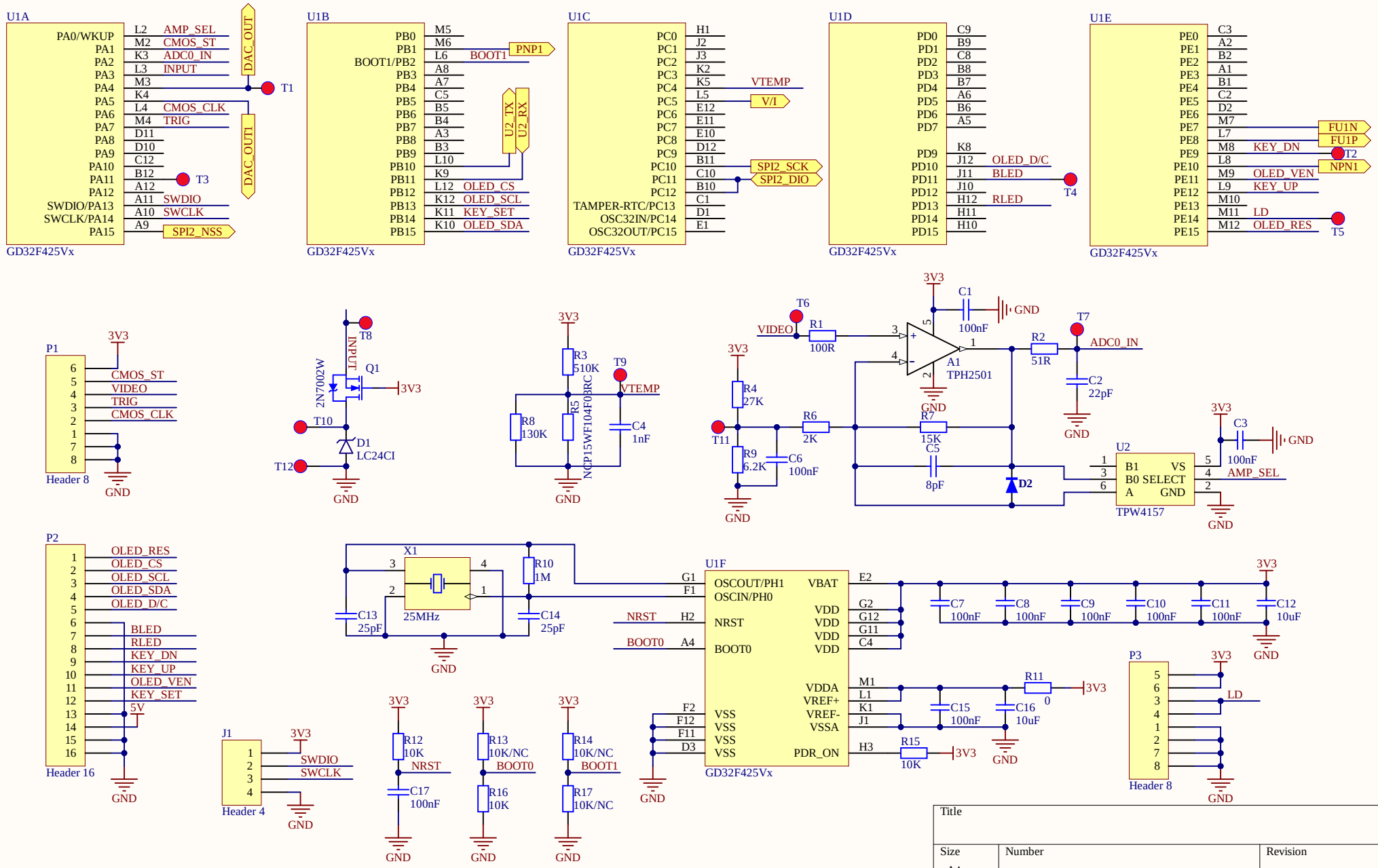


| Title | | |
|---|---|---|
| Size A4 | Number | Revision |
| Date: 9/23/2024 | | Sheet of |
| File: D:\Desktop\..\GD32F425.SchDoc | | Drawn By: |

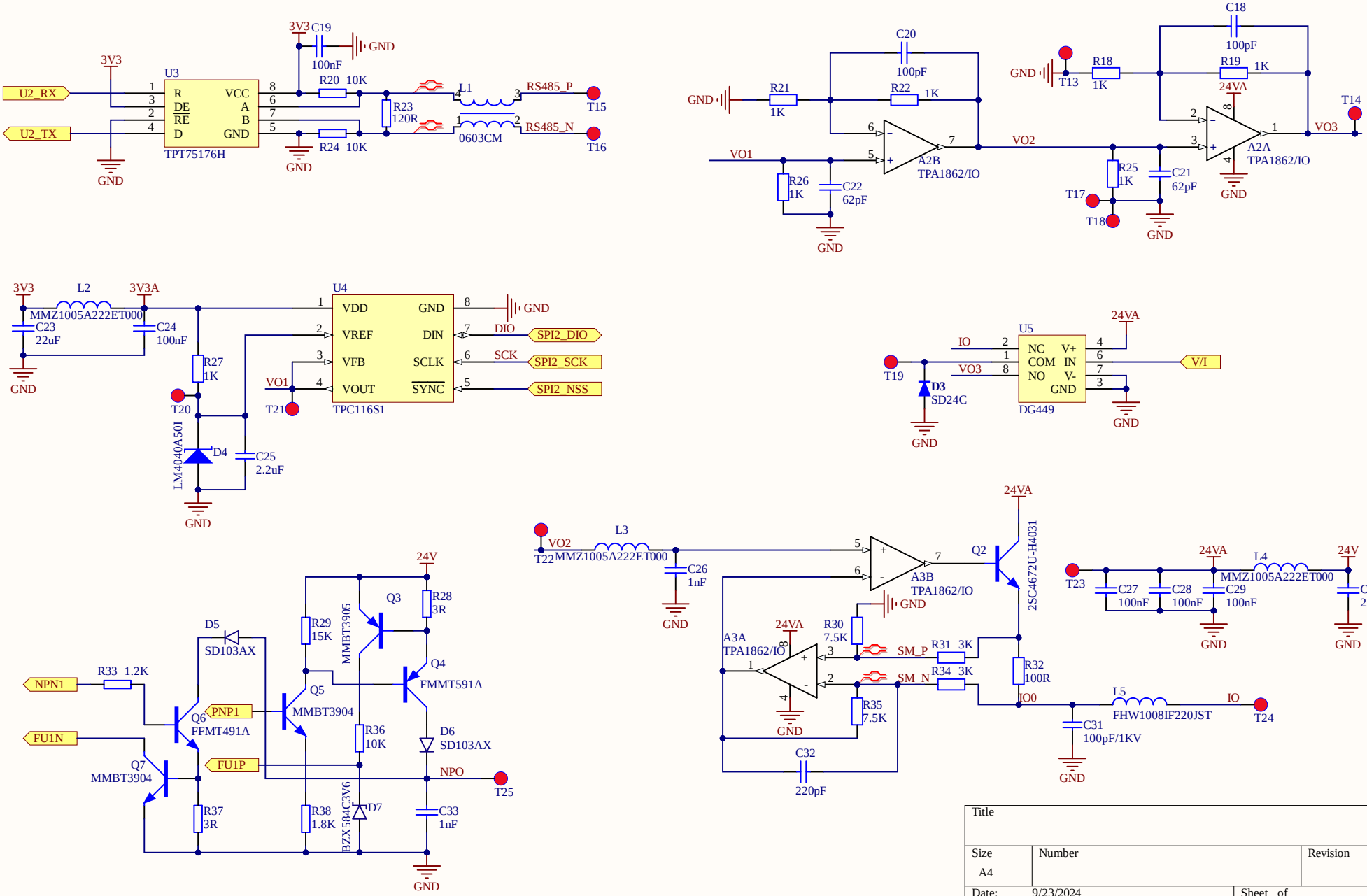


| Title | | |
|---|---|---|
| Size A4 | Number | Revision |
| Date: 9/23/2024 | | Sheet of |
| File: D:\Desktop\..\Output.SchDoc | | Drawn By: |

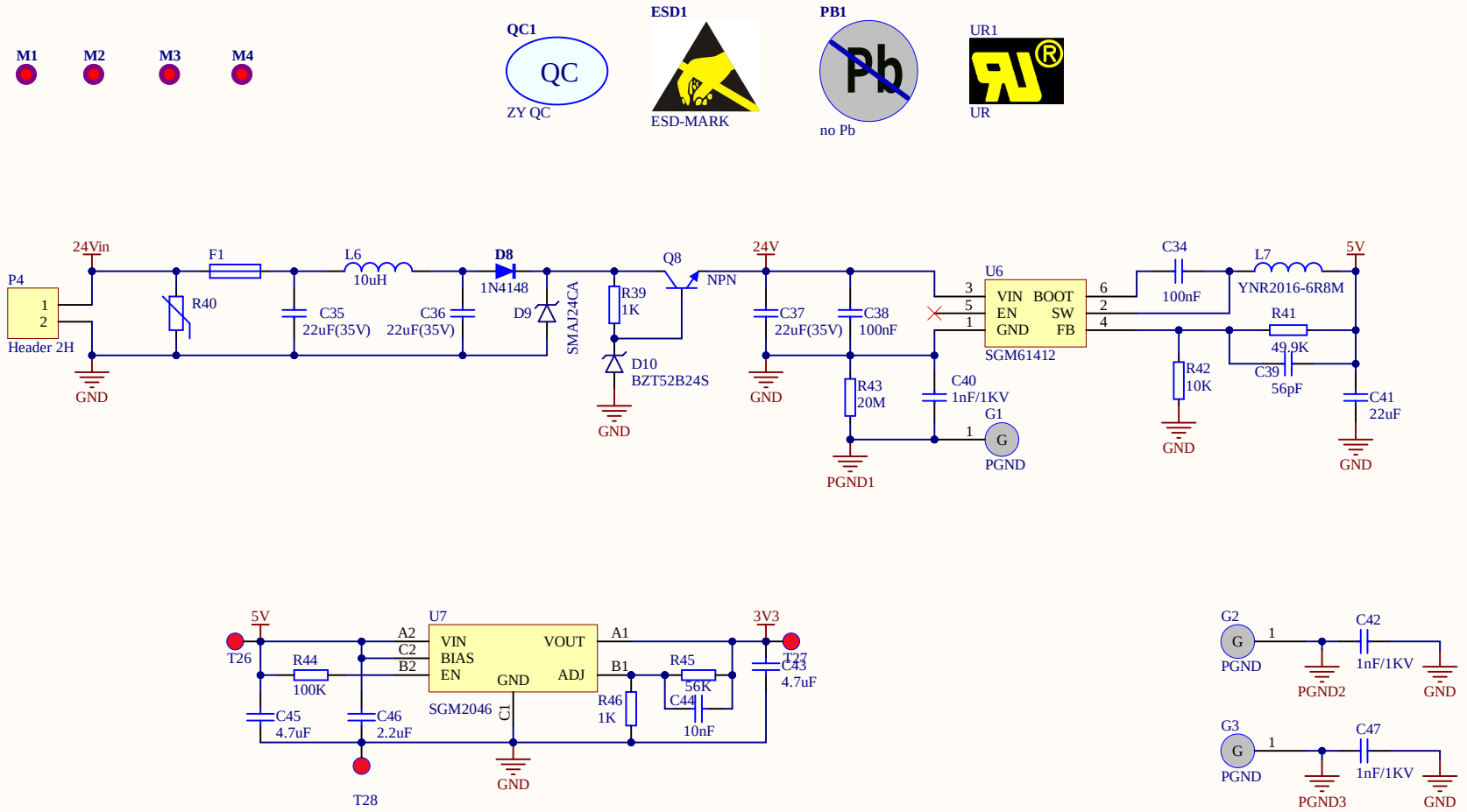


| Title | | |
|---|---|---|
| Size A4 | Number | Revision |
| Date: 9/23/2024 | | Sheet of |
| File: D:\Desktop\..\Power.SchDoc | | Drawn By: |

# Board Stack Report