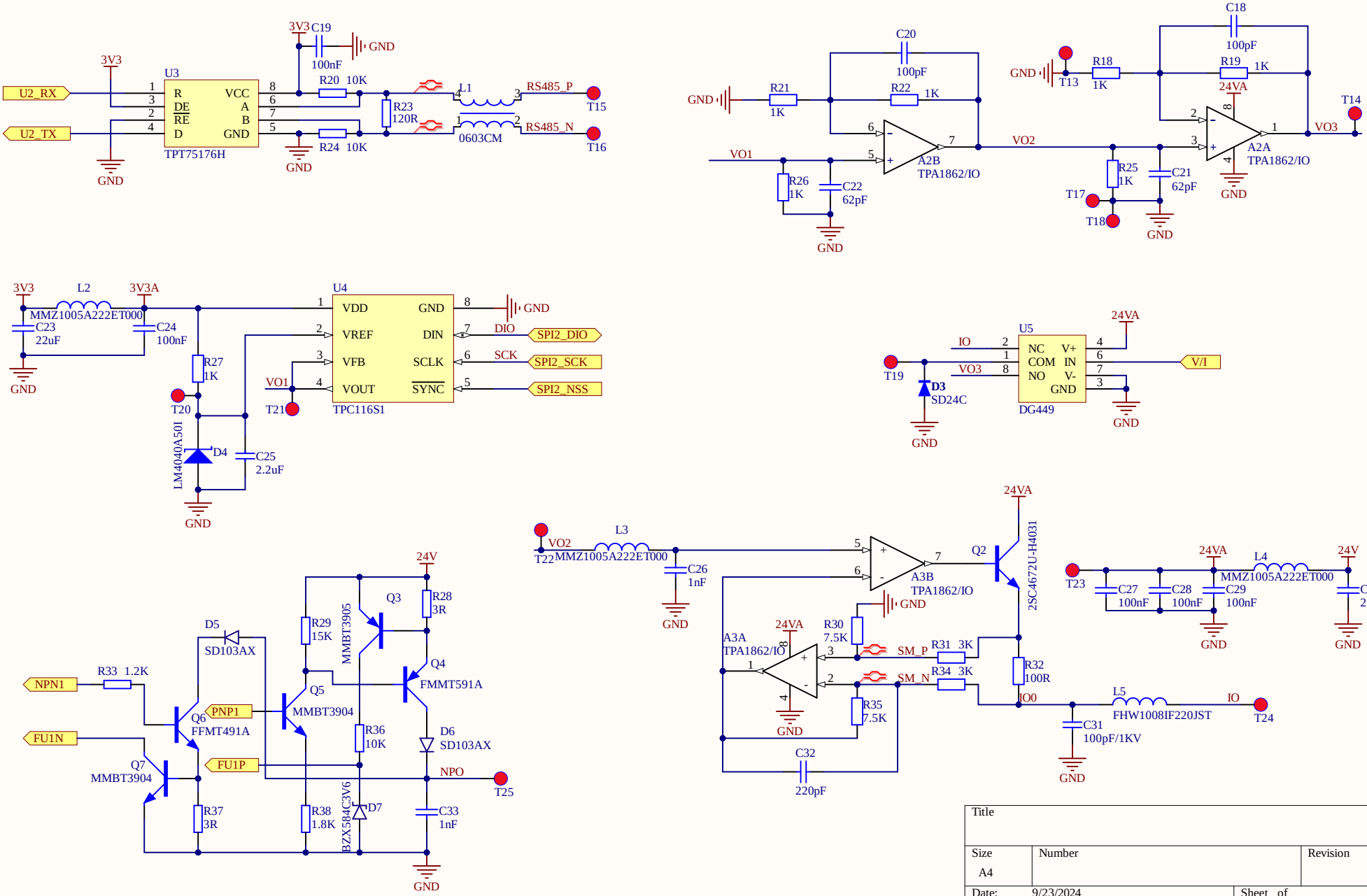

Title		
Size A4	Number	Revision
Date: 9/23/2024		Sheet of
File: D:\Desktop\..\Output.SchDoc		Drawn By:

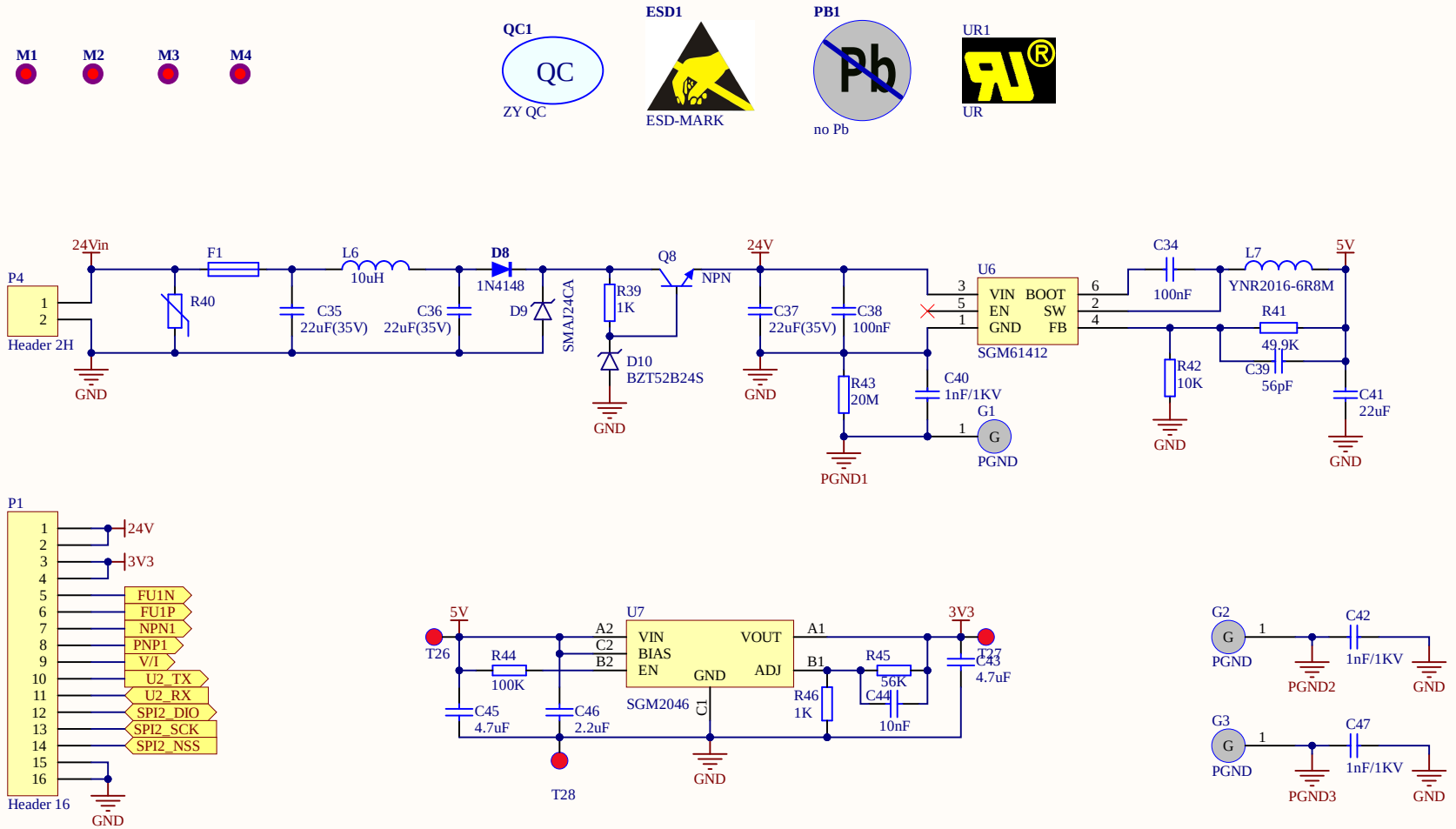

Title		
Size A4	Number	Revision
Date: 9/23/2024		Sheet of
File: D:\Desktop\..\Power.SchDoc		Drawn By:

Board Stack Report