Type No. S15943-02

PRELIMINARY

1. Ratings and characteristics

1.1 Absolute maximum ratings

Parameter	Symbol	Value	Unit	Remark
Operating temperature	Topr	-30 to +100	℃	(Non-condensing)
Storage temperature	Tstg	-40 to +100	℃	(Non-condensing)
Reverse current	I_R	200	μA	DC current

1.2 Electrical and optical characteristics (Ta=25 °C)

Parameter	Symbol	Condition	Min.	Typ.	Max.	Unit
Spectral response range	λ		--	400～1000	--	nm
Peak sensitivity wavelength	λp	M=100	--	760	--	nm
Photo sensitivity	S	M=1, λ=760 nm	--	0.48	--	A/W
Quantum efficiency	QE	M=1, λ=760 nm	--	78	--	%
Breakdown voltage	V_{BR}	I_R=100 μA	80	100	120	V
Temperature coefficient of V_{BR}	γ		--	0.42	--	V/℃
Dark current	I_D	M=100	--	0.02	0.2	nA
Cut-off frequency	fc	M=100, λ=760 nm R_L=50 Ω, -3 dB	--	2000	--	MHz
Terminal capacitance	Ct	M=100, f=1 MHz	--	0.7	--	pF
Excess noise figure	x	M=100, λ=760 nm	--	0.3	--	

Type No. S15943-02	

1.3 Characteristic example

ID, Gain characteristics

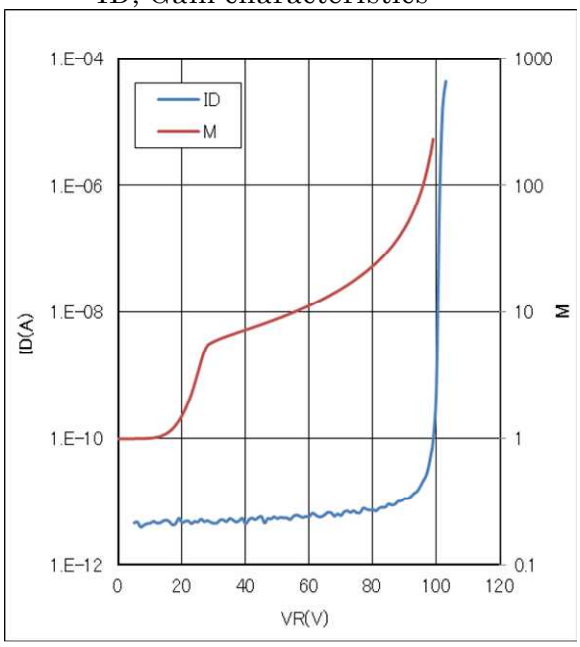

Ct characteristics

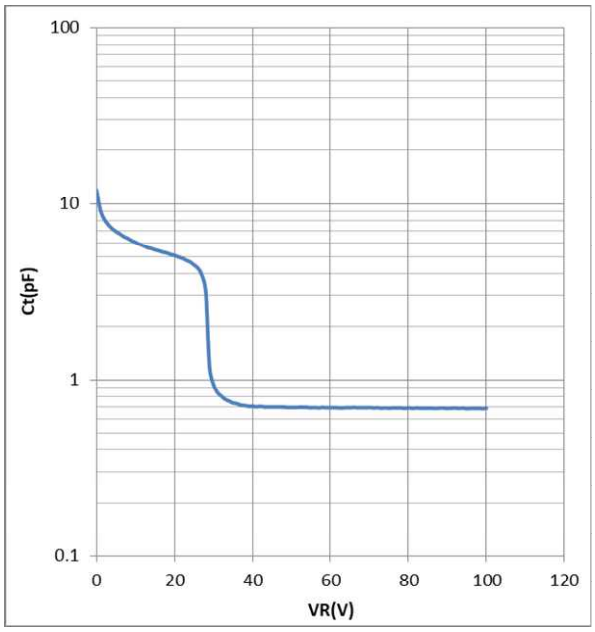

Spectral response characteristic

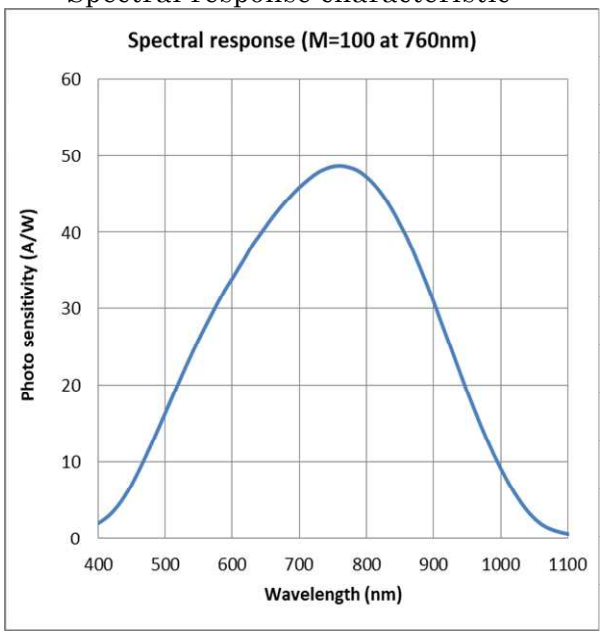

Type No. S15943-02

2. Dimensional outline (Unit : mm)

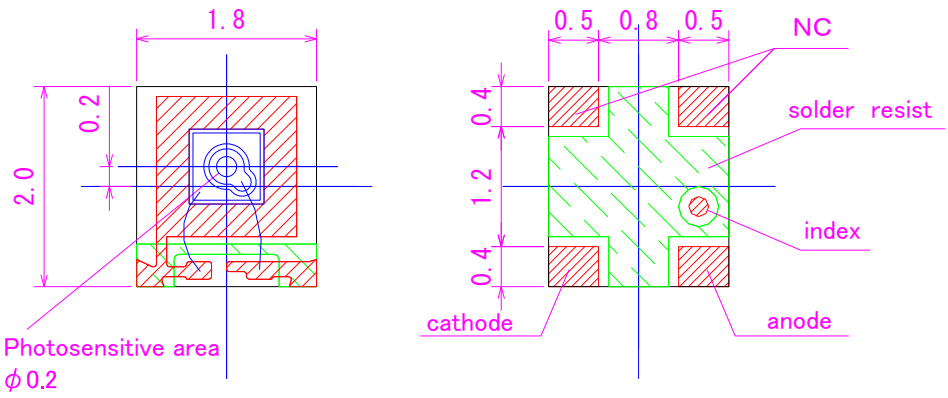

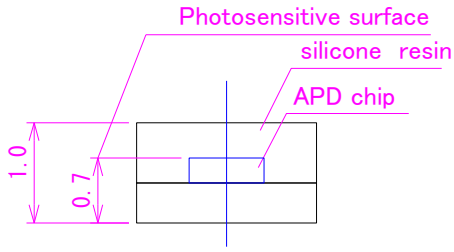

1. Tolerance unless otherwise noted: ±0.1
2. Position tolerance for active area has to be relative to pads less than ±0.15

Electrodes

3. Recommended land pattern (Unit:mm)

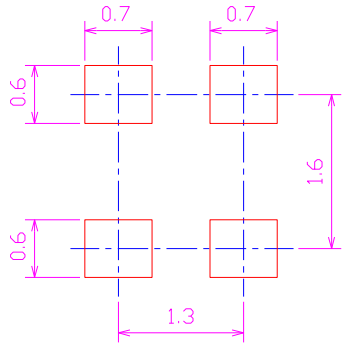

4. Packing

4.1 Embossed tape carrier (Ref. Figure.1)

Width : 8mm, Pitch : 4mm

[Figure. 1]

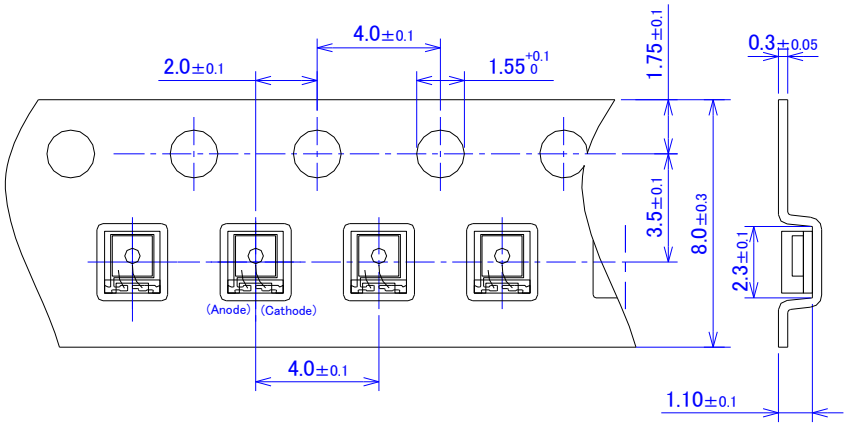

Type No. S15943-02

4.2 Taping to reel
[Figure. 2]

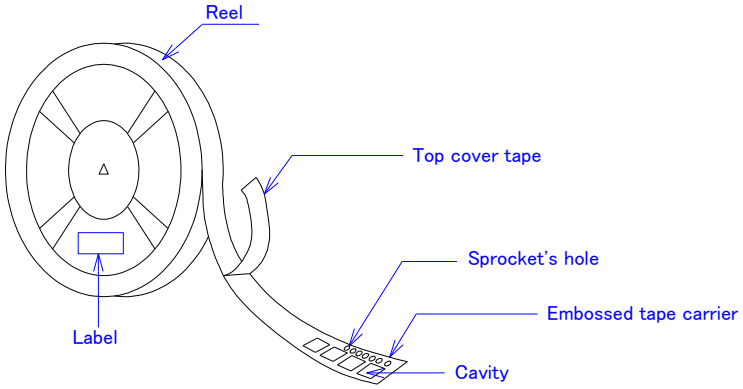

The following parameters & bar-code are indicated on the label.
· Manufacturer part number (MPN)
· Quantity (QTY)
· Lot No
· Date Code

4.3 Reel
Max. 1000pcs / reel
[Figure.3]

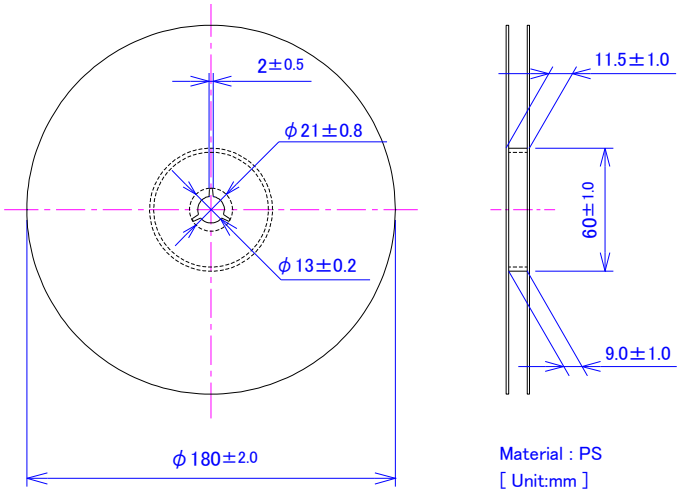

4.4 Moisture-proof pack
1reel/pack : enclosed silica gel.
The following parameters & bar-code are indicated on the label.
· Purchase order
· Manufacturer part number (MPN)
· Quantity (QTY)
· Lot No
· Date Code
The precaution label for moisture proof storage is stuck on the pack.

Type No. S15943-02	

5. Storage conditions after unpacking

After unpacking, store the product in accordance with the specified moisture sensitivity level (MSL), and use it within the specified period. For moisture sensitivity levels, see Table 2a.

[Table 1] Storage conditions by moisture sensitivity level

Moisture sensitivity level	Storage period	Storage temperature, humidity
1	Indefinitely	30 °C or less, 85% or less
2	1 year	30 °C or less, 60% or less
2a	4 weeks	30 °C or less, 60% or less
3	168 hours	30 °C or less, 60% or less
4	72 hours	30 °C or less, 60% or less
5	48 hours	30 °C or less, 60% or less
5a	24 hours	30 °C or less, 60% or less

6. Reflow soldering

The effect that the product receives during reflow soldering varies depending on the circuit board and reflow oven that are used. Before actual cleaning, check for any problems by testing out the cleaning methods in advance.
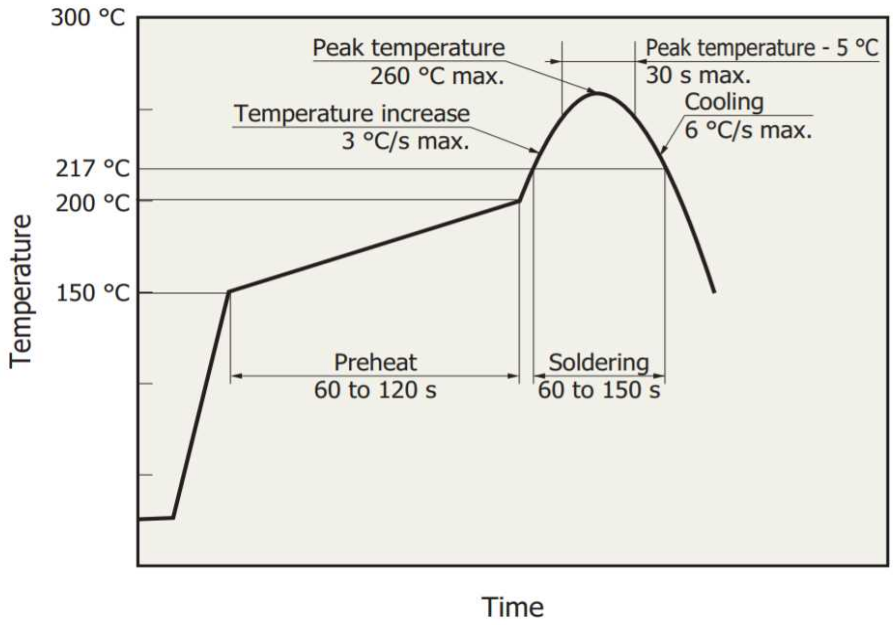
[Figure 4] Actual data example of temperature profile measured with our hot-air reflow oven for product testing (leadfree product)