Specification Sheet (S17140)

The 41st DEPT. August 2, 2024 E

Characteristics

- Built-in center of gravity calculation circuit directly outputs center of gravity position coordinates.
- 2 pixel binning readout is possible.
- Line rate can be increased by partial readout.
- The long light receiving surface with a height of 1000 μm makes it easy to align the light source.
- This sensor is a 12-bit digital output type.

Precautions

- Surface protection tape

To protect the photosensitive area, protective tape is applied to the surface of the product. After assembly remove this tape before use.

1. Structure

Parameter	Specification	Unit
Number of pixels	512	-
Pixel pitch	12.5	μm
Pixel height	1000	μm
Effective photosensitive area length	6.4	mm
Package	Glass epoxy	-
Seal material	Silicone resin	-

2. Absolute maximum ratings

Parameter		Symbol	Condition	Value	Unit
Supply voltage	Analog terminal	Vdd(A)	Ta=25°C	-0.3 to +3.9	V
	Digital terminal	Vdd(D)	Ta=25°C	-0.3 to +3.9	V
Digital input terminal voltage *1		Vi	Ta=25°C	-0.3 to +3.9	V
Operating temperature		Topr	No dew condensation *2	-40 to +70 (TBD)	°C
Storage temperature		Tstg	No dew condensation *2	-40 to +70 (TBD)	°C
Reflow soldering conditions *3		Tsol	-	260 (3 times)	°C

*1: MOSI, SCLK, CS, RSTB, MCLK, MST, TG_reset
*2: When there is a temperature difference between a product and the surrounding area in high humidity environment, dew condensation may occur on the product surface. Dew condensation on the product may cause a deterioration in characteristics and reliability.
*3: Reflow soldering, JEDEC J-STD-020 MSL 3
Notes: Exceeding the absolute maximum ratings even momentarily may cause a drop in product product quality. Always be sure to use the product within the absolute maximum ratings.

3. Recommended terminal voltage [Ta=25°C]

Parameter		Symbol	Min.	Typ.	Max.	Unit
Supply voltage	Analog terminal	Vdd(A)	3.15 (TBD)	3.3	3.6 (TBD)	V
	Digital terminal	Vdd(D)	3.15 (TBD)	3.3	3.6 (TBD)	V
Digital input terminal voltage	High level	Vi(H)	3	Vdd(D)	Vdd(D)+0.25	V
	Low level	Vi(L)	0	-	0.3	V

4. Electrical characteristics [Ta=25℃, Vdd(A)=Vdd(D)=3.3V]

Parameter		Symbol	Min.	Typ.	Max.	Unit
Master clock pulse frequency		f(MCLK)	10M	-	40M	Hz
Data rate		DR	-	f(MCLK) x 2	-	Hz
Line rate *1		LR	-	-	110.8	kHz
Digital output voltage	High level	Vdo(H)	Vdd(D) - 0.25	Vdd(D)	-	V
	Low level	Vdo(L)	-	0	0.25	V
Current consumption *2		Ic	-	140(TBD)	-	mA

*1: When all pixels (512 pixels) are read out
*2: f(MCLK)=40MHz
Current consumption changes according to the master clock pulse frequency.

5. Electrical and optical characteristics [Ta=25℃, Vdd(A)=Vdd(D)=3.3V, f(MCLK)=40MHz]

(Default SPI settings)

Parameter	Symbol	Min.	Typ.	Max.	Unit
Spectral response range	λ	400 to 1,000			nm
Peak sesitivity wavelength	λp	-	700	-	nm
Photosensitivity *1	Sw	-	1000k	-	DN/(lx・s)
Conversion efficiency	CE	-	1.6	-	uV/e-
Photoresponse nonuniformity *2	PRNU	-	±4 (TBD)	-	%
Dark output *3 *4	VD	-	19 (TBD)	-	DN
Saturation output *4	Vsat	-	3650 (TBD)	-	DN
Readout noise *5	Nread	-	1.7 (TBD)	-	DN rms
Dynamic range *6	Drange	-	2147 (TBD)	-	times
Output offset *7	Voffset	-	450 (TBD)	-	DN
Image lag *8	Lag	-	0.15 (TBD)	-	%

*1: 2856 K, tungsten lamp
*2: Photoresponse nonuniformity (PRNU) is the output nonuniformity that occurs when the entire photosensitive area is uniformly illuminated by light which is 50% of the saturation exposure level. PRNU is measured using 506 pixels excluding 3 pixels at both ends, and is defined as follows:
PRNU = ΔX/X * 100 [%]
X: average output of all pixels
ΔX: difference between the maximum or minimum output and X
*3: Integration time Ts=10ms
*4: Difference from the output offset
*5: Dark state
*6: Vsat / Nread
*7: Initial value, The output offset level can be changed through the SPI.
*8: If output of the previous frame exceeds the saturation output, it is the signal that remains in the next frame.

6. Electrical and optical characteristics [A/D converter, Ta=25℃, Vdd(A)=Vd(D)=3.3V]

Parameter	Symbol	Value	Unit
Resolution	RESO	12	bit
Conversion time	tCON	1/2f(MCLK)	s
Conversion Voltage range	-	0 to 2	V

7. Spectral response (typical example)

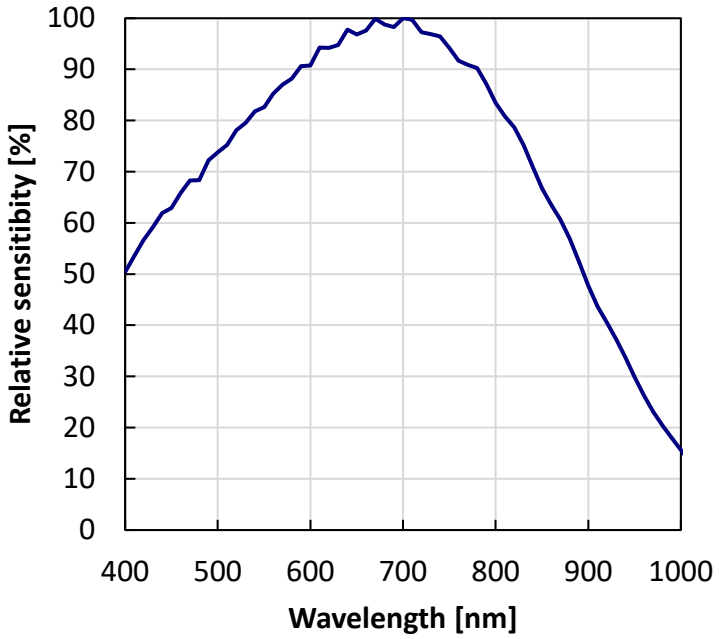

8. Block diagram

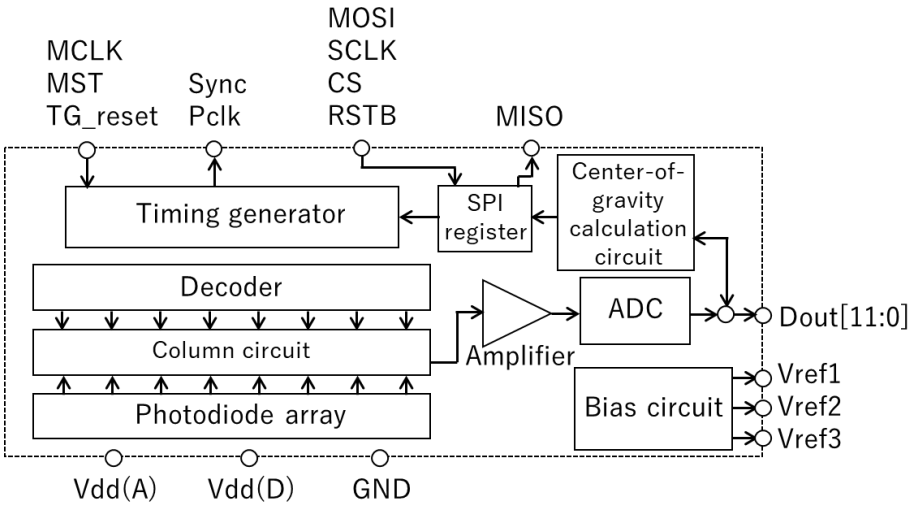

9. Timing chart

This sensor has the external start pulse mode controlled by an external trigger (MST) and the internal start pulse mode controlled without an external trigger. Refer to item 11 for mode setting. In addition, since global shutter readout is used, the start and end of the integration time are performed simultaneously for all pixels.

(1) Reset input immediately after power-on

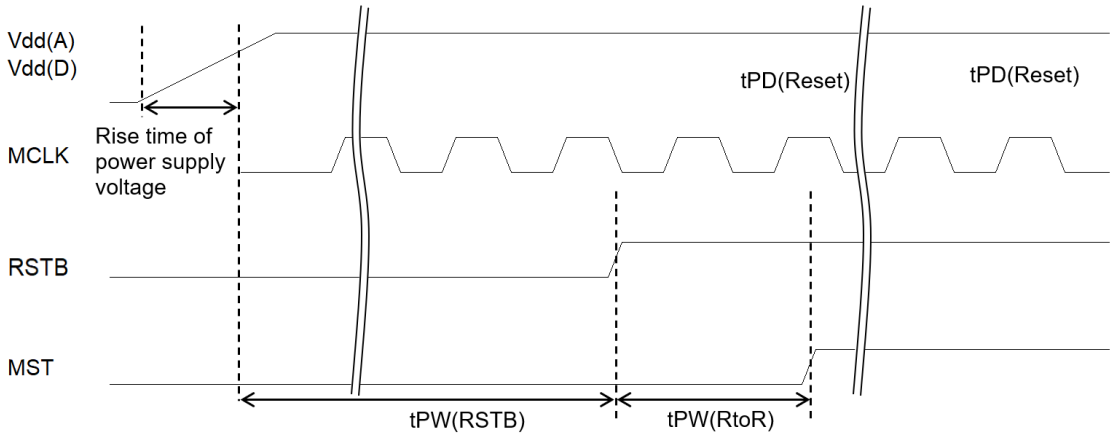

[Ta=25℃, Vdd(A)=Vdd(D)=3.3V, f(MCLK)=40 MHz max., at power-on]

Parameter	Symbol	Min.	Typ.	Max.	Unit
RSTB signal low period	tPW(RSTB)	100	-	-	ns
Interval between RSTB and MST signals	tPW(RtoR)	100	-	-	ns

(2) External start pulse mode

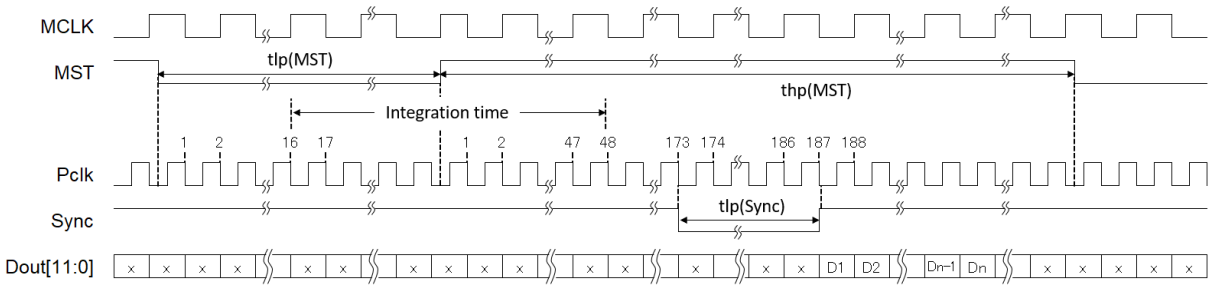

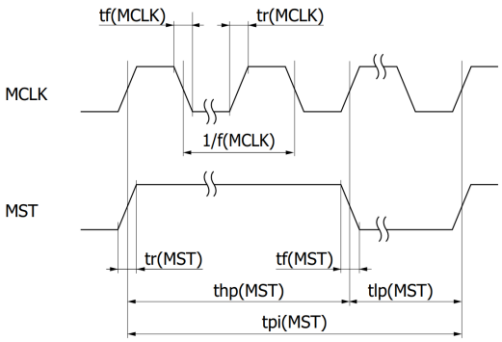

Parameter	Symbol	Min.	Typ.	Max.	Unit
Start Pulse cycle*1 *2	tpi(MST)	361/f(MCLK)	-	-	s
High start pulse period	thp(MST)	54/f(MCLK)	-	-	s
Low start pulse period*3	tlp(MST)	7/f(MCLK)	-	-	s
Start pulse rise/fall times	tr(MST), tf(MST)	-	5	7	ns
Clock pulse duty	-	45	50	55	%
Clock pulse rise/fall times	tr(MCLK), tf(MCLK)	-	5	7	ns

*1 When 512 pixels are read out.
*2 The period is (105+N/2)/f(MCLK) when N pixels are read out.
*3 The integration time corresponds to the low period of the start pulse +32 cycles of Pclk. The integration time can be adjusted by changing the ratio between the high and low start pulse periods. If the first Pclk after the start pulse goes high is assumed to be the first edge, the video signal is output on the 187th falling edge of Pclk. Since the start of the video output is simultaneous with the rising edge of Sync, acquire the video signal in reference to Sync.

■ Description of operation

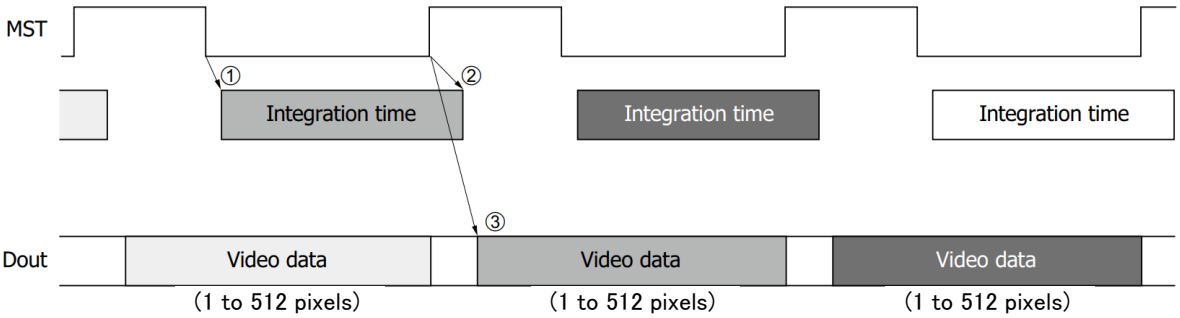

①The start of integration time is determined by the falling edge of the master start pulse.
②The end of integration time is determined by the rising edge of the master start pulse.
③Video data is output after the rising edge of the master start pulse. Video data is output in order from the first pixel.
Note: Signal integration is possible even during video data output.

(3) Internal start pulse mode

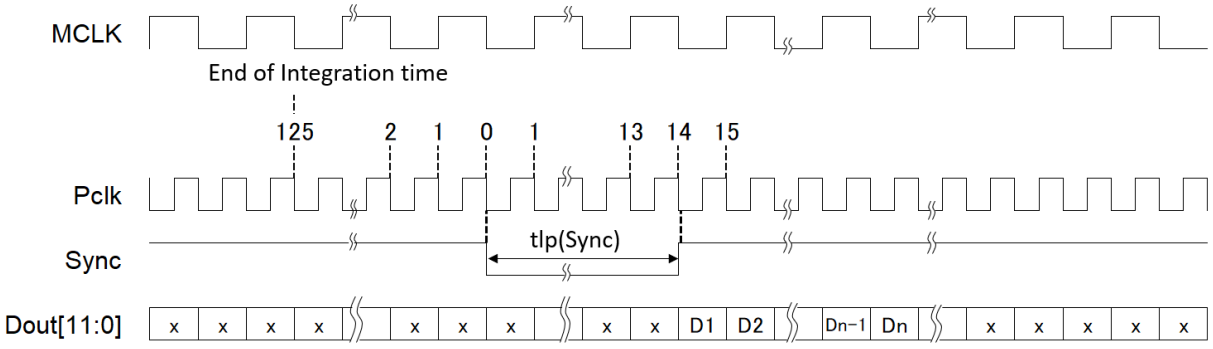

- Integration time of internal start pulse mode is set with Integ[23:0]. When Integ[23:0] increase by 1, integration time increases by1 cycle of the master clock pulses. The integration time is (Integ[23:0]+23)/f(MCLK) [s].The end of integration time is before 125 cycle of the Pclk from the falling edge of Sync.
- Blanking period of internal start pulse mode is set with Blanking[23:0]. The frame cycle is (105+Blanking+N/2)/f(MCLK) [s] when N pixels are read out. To make integration time longer than the pixel readout period, set an appropriate blanking period.

(4) Output of center-of-gravity calculation results

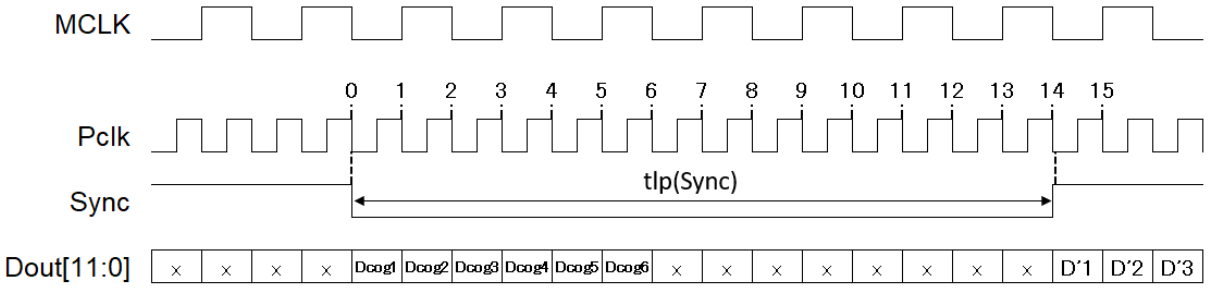

The center-of-gravity calculation result can be obtained from the video output signal pin Dout[11:0]. The center-of-gravity calculation result is output from the falling edge of Pclk at the same time as the falling edge of Sync. As for the center-of-gravity calculation result, 6 data from Dcog1 to Dcog6 are output. The contents of Dcog1 to Dcog6 are shown below.

Dout output	Symbol	Binary	Contents of center of gravity calculation results
Dcog1[11:0]	Frame_cnt[3:0]	---- ---- xxxx	Frame counter
Dcog2[11:0]	Maxpos_int[8:0]	---x xxxx xxxx	Center-of-gravity position coordinates (integer part)
Dcog3[11:0]	Maxpos_dec[9:0]	xxxx xxxx xx--	Center-of-gravity position coordinates (decimal part)
Dcog4[11:0]	Out_sum[15:4]	xxxx xxxx xxxx	Total output for center-of-gravity calclation
Dcog5[11:0]	Out_sum[3:0]	---- xxxx ----	
Dcog6[11:0]	Maxval[11:0]	xxxx xxxx xxxx	Maximum output

Since the output of the center-of-gravity calculation result starts at the same time as the falling edge of Sync, please import it based on Sync as with video output. The center-of-gravity calculation result will be output after the video output. D'1, D'2, D'3… in the figure are the video outputs of the next frame.

10. Operation example

Line rate=115.6 klines/s, master start pulse frequency=40 MHz, maximum integration time

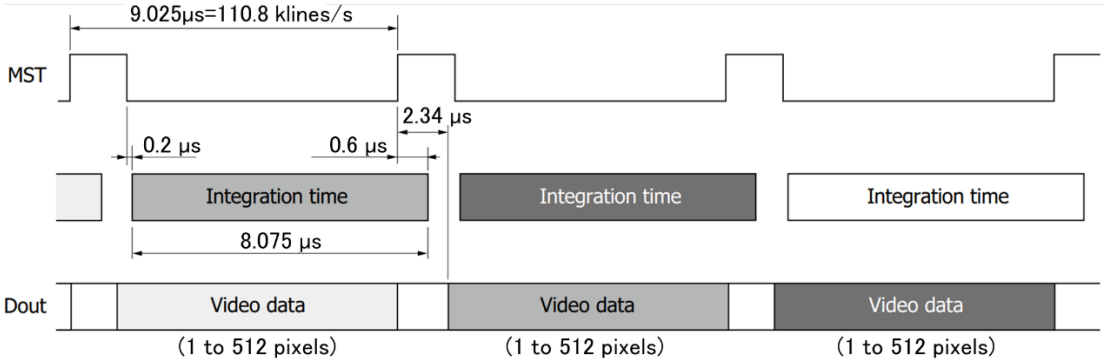

- Master start pulse period=361/f(MCLK)=9.025 μs (line rate is reciprocal of start pulse period)
- Master start pulse low period=Master start pulse period - Minimum period of master start pulse high period
  =361/f(MCLK) - 54/f(MCLK)=361/40 MHz - 54/40 MHz=307/40 MHz=7.675 μs
- Integration time=Master start pulse low period + pixel clock pulse 32 cycles=307/40MHz + 32/80MHz=8.075 μs
  Sync rises approximately 2.34 μs after the rising edge of the master start pulse. Then the video output signal is output in order from the first pixels.

11. SPI (serial peripheral interface) address

Address (decimal)	Register	Access	Initial value		setting
			Binary	Decimal	
0	Mode[0]	R/W	---- ---0	0	Mode setting (1-bit) Mode[0]: swiching the trigger mode 0: external start pulse mode 1: internal start pulse mode (Set "-" to 0.)
29	Integ[23:16]	R/W	1111 1111	16777215	Integtation time in internal start pulse mode (24-bit)
3	Integ[15:8]	R/W	1111 1111		
4	Integ[7:0]	R/W	1111 1111		
30	Blanking[23:16]	R/W	0000 0000	0	Wait time between frames in internal start pulse mode (24-bit)
7	Blanking[15:8]	R/W	0000 0000		
8	Blanking[7:0]	R/W	0000 0000		
11	Win_S[8]	R/W	---- ---0	0	Readout start pixels (9-bit) (Set "-" to 0.)
12	Win_S[7:0]	R/W	0000 0000		
15	Win_W[8]	R/W	---- ---1	511	Number of readout pixels pixels (9-bit) (Set "-" to 0.)
16	Win_W[7:0]	R/W	1111 1111		
18	Binning[0]	R/W	---- ---0	0	Number of binning pixels pixels (1-bit) (Set "-" to 0.)
19	AGC[2:0]	R/W	---- -111	7	Gain setting (3-bit) (Set "-" to 0.)
32	Calc_area[1:0]	R/W	---- --00	0	Number of pixels for the center-of-gravity calculation(2-bit) Calc_area[1:0]=0: 5 pixels Calc_area[1:0]=1: 9 pixels Calc_area[1:0]=2: 19 pixels Calc_area[1:0]=3: 29 pixels (Set "-" to 0.)
33	Max_th[11:8]	R/W	---- 0000	0	Output threshold for the center-of-gravity calclation (12-bit) (Set "-" to 0.)
34	Max_th[7:0]	R/W	0000 0000	0	
35	Frame_cnt[3:0]	R	---- 0000	0	Frame counter (4-bit)
36	Maxpos_int[8]	R	---- ---0	0	Center-of-gravity position coordinates (integer part) (9-bit)
37	Maxpos_int[7:0]	R	0000 0000	0	
38	Maxpos_dec[9:2]	R	0000 0000	0	Center-of-gravity position coordinates (decimal part) (10-bit)
39	Maxpos_dec[1:0]	R	00-- ----	0	
44	Out_sum[15:8]	R	0000 0000	0	Total output for center-of-gravity calclation (16-bit)
45	Out_sum[7:0]	R	0000 0000	0	
46	Maxval[11:8]	R	---- 0000	0	Maximum output (12-bit)
47	Maxval[7:0]	R	0000 0000	0	

Notes: Be sure to set the addresses shown in the above table. Setting to the addresses not shown in the above table may cause malfunction.

■ Setting the trigger mode

(1) External start pulse mode

When Mode[0] is set to 0 (the initial setting), it will change the mode to external start pulse mode. The integration time and frame period are controlled by MST. (See Section 9 for details)

(2) Internal start pulse mode

When Mode[0] is set to 1, it will change the mode to internal start pulse mode. No external trigger is necessary in this mode. The integration time and frame period are controlled by Integ[23:0] and Blanking[23:0]. (See Section 9 for details)

The default setting is external start pulse mode. Follow the steps below to switch to the internal start pulse mode.

① Write 1 to Mode[0] of SPI.

② Raise TG_reset, hold it for 5 MCLK or more, and then lower it.

■ Setting the partial readout region

The line rate can be increased by reducing the number of readout pixels. Set the readout start pixel with Win_S. The readout start pixel can be specified in units of 2 pixels. The default setting is Win_S=0. The readout start pixel is set to the 1st pixel when Win_S=0,1, the 3rd pixel when Win_S=2,3, ..., the 511th pixel when Win_S=510,511.

Set the number of readout pixels with Win_W. The number of readout pixels can be specified in units of 2 pixel. The default setting is Win_W=511. The number of read pixels is set to 2 pixels when Win_W=0,1, 4 pixels when Win_S=2,3, ..., 512 pixels when Win_S=510,511. Be careful to keep Win_S + Win_W from exceeding 511. If the number exceeds 511, dummy data will be output.

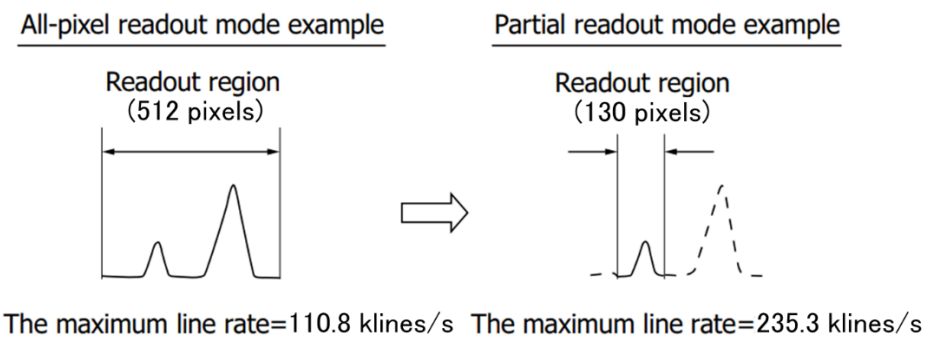

■ Setting the binning

The line rate can be increased by increasing the number of binning pixels. Sensitivity does not change with binning. When binning and partial readout are set, readout starts from the Win_W +1 pixel. Be careful to keep (number of binning pixels × Win_W) + (Win_S) from exceeding 511. If the number exceeds 511, dummy data will be output.

By setting "Binning[0]", the number of binning pixels can be changed.

Binning[0]		Number of binning pixels	Remarks
Decimal number	Binary number		
	[0]		
0	0	1	default
1	1	2	-

■ Setting the gain

By setting "AGC[2:0]", the gain can be adusted.

AGC[2:0]				Gain	Remarks
Decimal number	Binary number				
	[2]	[1]	[0]		
0	0	0	0	8	-
1	0	0	1	4	-
3	0	1	1	2	-
7	1	1	1	1	default

■ Setting the center-of-gravity calculation

This sensor has a center-of-gravity calculation function. The registers at addresses 32, 33, 34, 35, 36, 37, 38, 39, 44, 45, 46, and 47 in the table will be used by the center-of-gravity calculation function. See Section 19 for details.

12. Setting using the SPI

Set the SPI using SCLK, CS, and MOSI. Changing RSTB to low level resets all parameters to the initial settings.

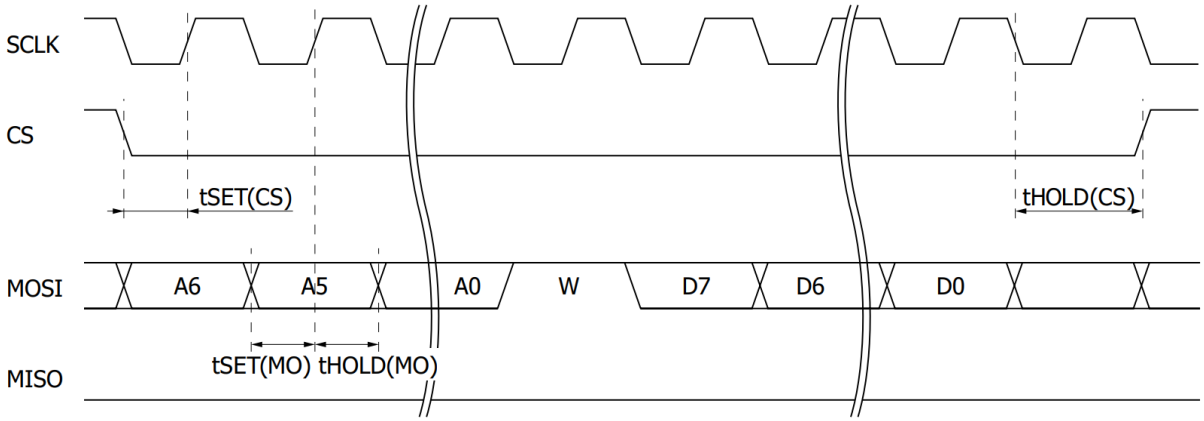

[Ta=25℃, Vdd(A)=Vdd(D)=3.3V]

Parameter	Symbol	Min.	Typ.	Max.	Unit
SPI clock pulse frequency	f(SCLK)	-	7.5	10	MHz
SPI setup time (CS)	tSET(CS)	7	-	-	ns
SPI hold time (CS)	tHOLD(CS)	7	-	-	ns
SPI setup time (MOSI)	tSET(MO)	7	-	-	ns
SPI hold time (MOSI)	tHOLD(MO)	7	-	-	ns
Digital input signal rise time *1	tr(sigi)	-	5	7	ns
Digital input signal fall time *1	tf(sigi)	-	5	7	ns

*1: Time for the input voltage to rise or fall between 10% and 90%

■ Setting example

Set Win_S[7:0]=8

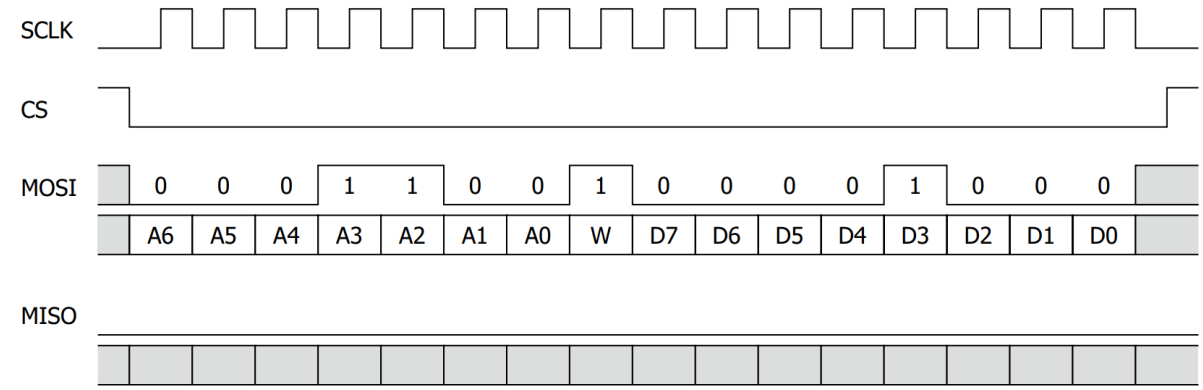

13. Confirm SPI settings

You can check the current SPI settings in the following manner.

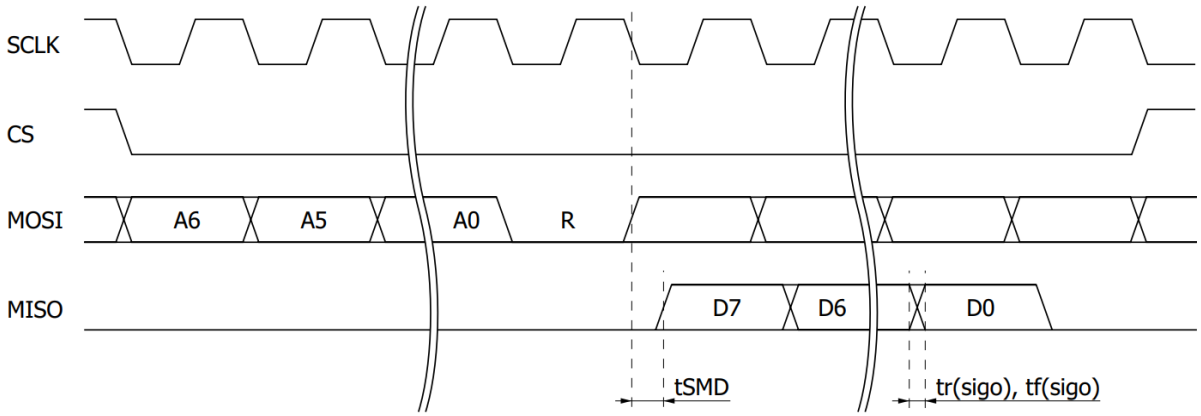

[Ta=25℃, Vdd(A)=Vdd(D)=3.3V]

Parameter	Symbol	Min.	Typ.	Max.	Unit
Output signal rise time *1	tr(sigo)	-	10	12	ns
Output signal fall time *1	tf(sigo)	-	10	12	ns
SCLK-MISO output delay time	tSMD	-	-	25	ns

*1: Time for the input voltage to rise or fall between 10% and 90% when the load capacitance of the output terminal is 10 pF

■ Check example

Check Win_S[7:0]=8

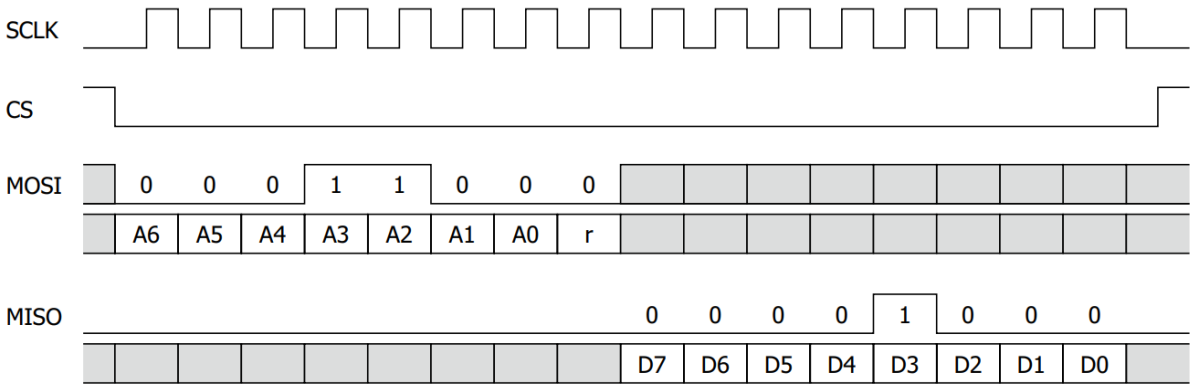

14. Dimensional outline (unit: mm)

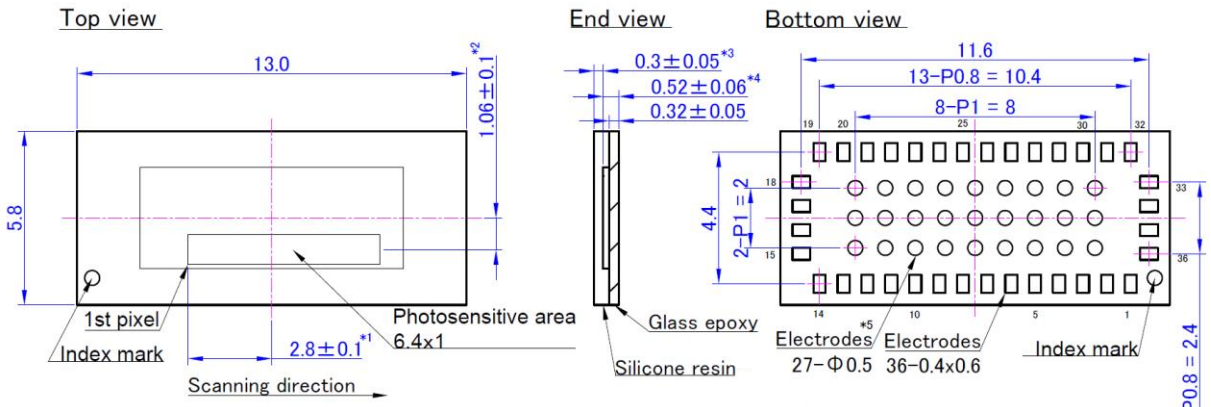

*1 Distance from the package center to the photosensitive area edge.
*2 Distance from the package center to the photosensitive area center.
*3 Distance from the outer of the package to the photosensitive surface.
*4 Distance from the package bottom to the photosensitive surface.
*5 All 27 central lands are connected to the GND pin.

Pin connection

No.	Symbol	No.	Symbol	No.	Symbol	No.	Symbol
1	MST	10	MOSI	19	Dout11	28	Dout2
2	TG_reset	11	Vdd(D)	20	Dout10	29	Dout1
3	MCLK	12	GND	21	Dout9	30	Dout0
4	Vdd(D)	13	Vref1	22	Dout8	31	Pclk
5	Vdd(D)	14	Vref2	23	Dout7	32	GND
6	RSTB	15	Vref3	24	Dout6	33	Vdd(A)
7	MISO	16	Vdd(A)	25	Dout5	34	Vdd(A)
8	SCLK	17	Vdd(A)	26	Dout4	35	GND
9	CS	18	GND	27	Dout3	36	Sync

General tolerance : ±0.1

15. Recommended land pattern (unit: mm)

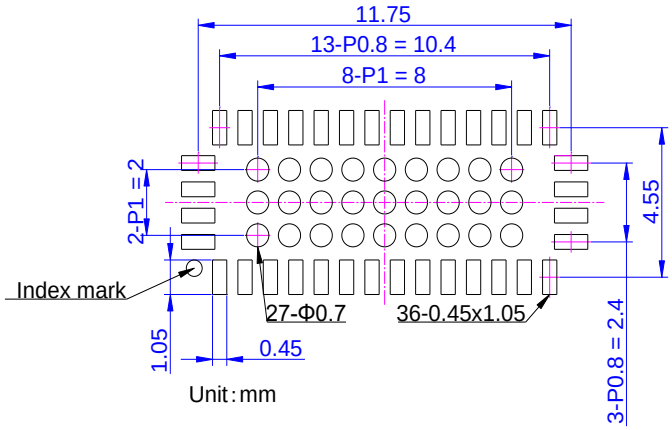

16. Pin connections

Pin no.	Symbol	Description	I/O
1	MST	Master start signal	I
2	TG_reset	Reset signal	I
3	MCLK	Master clock signal	I
4	Vdd(D)	Digital supply voltage (3.3V)	I
5	Vdd(D)	Digital supply voltage (3.3V)	I
6	RSTB	Reset signal for SPI	I
7	MISO	Output signal for SPI	O
8	SCLK	Clock signal for SPI	I
9	CS	Enable signal for SPI	I
10	MOSI	Input signal for SPI	I
11	Vdd(D)	Digital supply voltage (3.3V)	I
12	GND	Ground	-
13	Vref1	Bias voltage *1	-
14	Vref2	Bias voltage *1	-
15	Vref3	Bias voltage *1	-
16	Vdd(A)	Analog supply voltage (3.3V)	I
17	Vdd(A)	Analog supply voltage (3.3V)	I
18	GND	Ground	-
19	Dout11	Video output signal	O
20	Dout10	Video output signal	O
21	Dout9	Video output signal	O
22	Dout8	Video output signal	O
23	Dout7	Video output signal	O
24	Dout6	Video output signal	O
25	Dout5	Video output signal	O
26	Dout4	Video output signal	O
27	Dout3	Video output signal	O
28	Dout2	Video output signal	O
29	Dout1	Video output signal	O
30	Dout0	Video output signal	O
31	Pclk	Pixel output sync signal	O
32	GND	Ground	-
33	Vdd(A)	Analog supply voltage (3.3V)	I
34	Vdd(A)	Analog supply voltage (3.3V)	I
35	GND	Ground	-
36	Sync	Frame sync signal	O

*1: Insert a 1μF capacitor between the terminal and GND.

17. Recommended reflow soldering conditions (typical example)

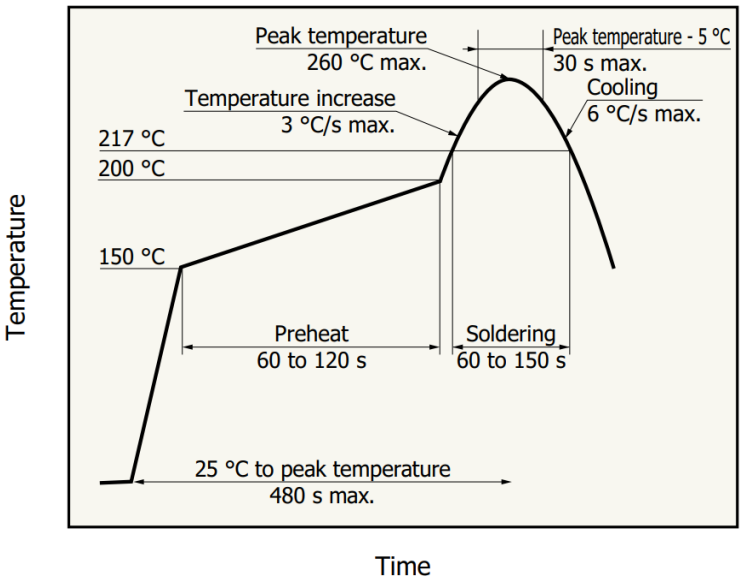

- This product supports lead-free soldering. After unpacking, store it in an environment at a temperature of 30℃ or less and a humidity of 60% or less, and perform soldering within 1 week.
- The effect that the product receives during reflow soldering varies depending on the circuit board and reflow oven that are used. When you set reflow soldering conditions, check that problems do not occur in the product by testing out the conditions in advance.
- The storage conditions for unopend profucts are 15 to 35 ℃ temperature range, 45 to 75% humidity range, and up to 3 month storage.

18. Application circuit example

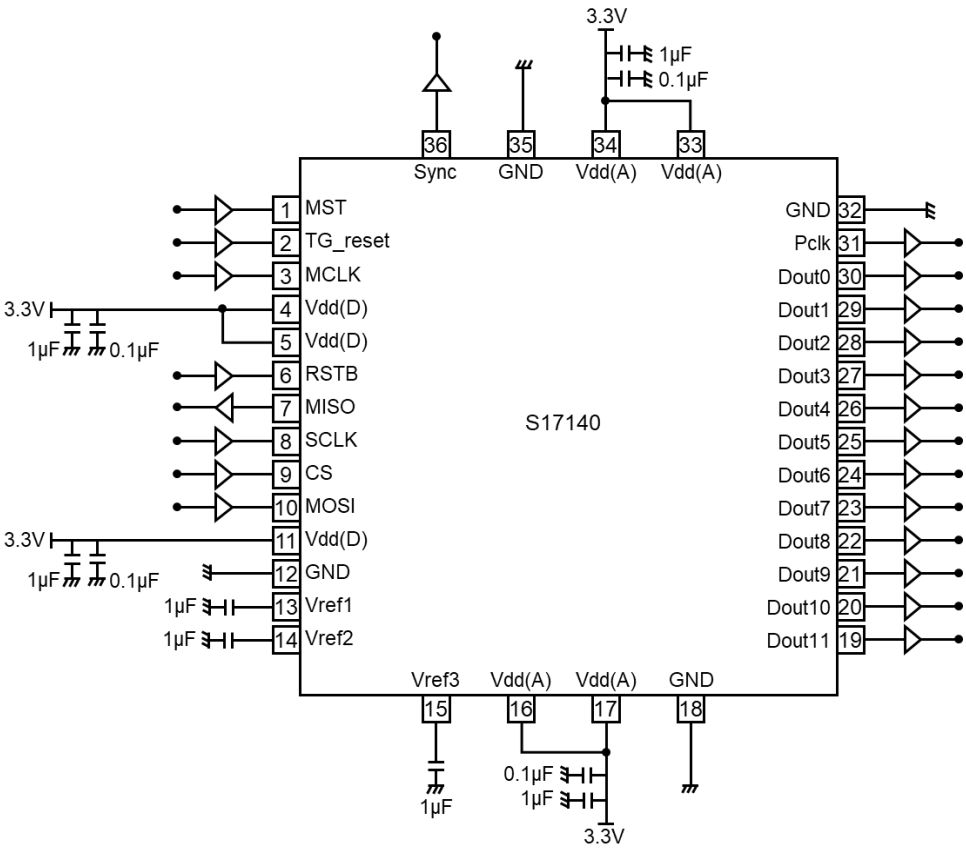

19. Center-of-gravity calculation

This sensor has a center-of-gravity calculation function. Perform centroid calculation using the method described in this section and output the centroid calculation result. The center-of-gravity calculation result is output from the video output signal pin Dout[11:0] (see Section 9 (4)). The center-of-gravity calculation result can also be obtained by reading SPI (see section 13).

(1) Center-of-gravity calculation setting

■ **Number of pixels**

Set the number of pixels used by the center-of-gravity calculation circuit for the center-of-gravity calculation with Calc_area[1:0]. The center-of-gravity calculation circuit does center-of-gravity calculation using the output data of the number of pixels set in Calc_area[1:0], centered on the maximum output pixels. For example, if the settings are Calc_area[1]=1 and Calc_area[0]=0, and the output from the 100th pixel is maximum, then the 91st to 109th pixels (19 pixels) are used for center-of-gravity calculation.

The pixels for center-of-gravity calculation should be larger than the diameter of the light spot. We recommend setting the number of pixels as few as possible to reduce the effect of background light.

Cali_area[1:0]		Number of pixels for center-of-gravity calclation	Note
Decimal	Binary		
0	00	5	initial setting
1	01	9	
2	10	19	
3	11	29	

■ **Pixel output threshold**

Set the threshold of pixel output (12-bit digital value) used for center-of-gravity calculation with Max_th[11:0]. The center-of-gravity calculation circuit ignores outputs that are smaller than the pixel output threshold.The pixel output threshold should be sufficiently smaller than the output of the pixels illuminated by the light spot. We recommend setting the pixel output threshold to be lager than the light output from background light.

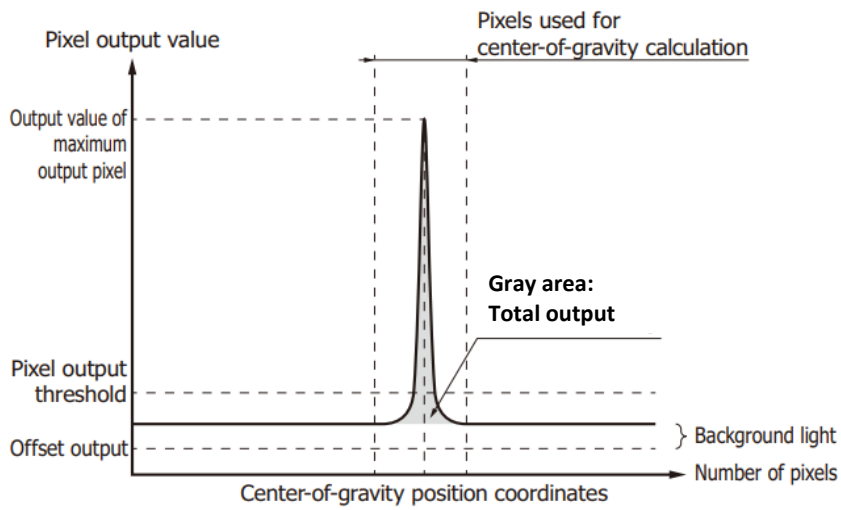

(2) Center-of-gravity calculation result

The center-of-gravity position coordinates, total output of the pixels for the center-of-gravity calculation, output of the maximum output pixel, and frame counter are obtained as results of center-of-gravity calculation. If the outputs of multiple pixels are the same, then center-of-gravity calculation is done centered on the pixels with the smallest pixel no.

■ Center-of-gravity position coordinates

The center-of-gravity position coordinates are the values obtained by subtracting 1 from the pixel no. illuminated by the light spot. The center-of-gravity position coordinates are saved to Maxpos_int[8:0], Maxpos_dec[9:0]. Center-of-gravity coordinates are fixed points. Maxpos_int[8:0] is 9-bit integers, while Maxpos_dec[9:0] is 10-bit decimals. When the index mark is set to the bottom left, the left coordinates is 0.

■ Totak output of pixels for center-of-gravity calculation

The total output of pixels for center-of-gravity calculation are saved Out_sum[15:0].

■ Output of the maximum output pixel

The output of the maximum output pixel is saved to Maxval[11:0]. If the light level is large and the pixel output has reached saturation, the accuracy of the center-of-gravity calculation result may decrease. Light level and gain need to be adjusted to prevent saturation.

■ Frame counter

Frame counter is saved to Frame_cnt[3:0]. The frame counter is increased in increments of 1 for each frame. By acquiring the frame counter along with the center-of-gravity calculation results, it is possible to check that the center-of-gravity calculation result is acquired for each frame. The frame counter repeats from 0 to 1. By setting SPI_RSTB to low, the frame counter can be set to its initial value of 0.

■ Center -of-gravity calculation method

First, the position of the maximum output pixel is detected from the profile obtained with the 1st frame. By obtaining the 0th and 1st moments from the pixel output in the center-of-gravity calculation range centered on that position, it calculates the center-of-gravity position. The center-of-gravity calculation results is saved to the register. The procedure for center-of-gravity calculation is shown below.

Parameter	Symbol	Vale
Pixel no.	n	0~511
Pixel output	Dn	0~4095
Smoothed pixel output	Dn'	0~4095
Partial readout start pixel no.	WinS	0~511
Number of partial readout pixels	WinW	0~511
Center-of-gravity calculation range	calc_area[1:0]	[00]=5, [01]=9, [10]=19, [11]=29
Pixel output threshold	max_th	0~511

① Output (D_{n-1}, D_n, D_{n+1}) for every 3 pixels (n-1, n, n+1) are smoothed for all pixels in the center-of-gravity calculation range.

$$D'_n = \frac{D_{n-1} + D_n + D_{n+1}}{4}$$

D'_n : output after smoothing

n : pixel no.

② The position (nmax) is detected for the pixel (the maximum output pixel) with the maximum output D'_n after smoothing. The maximum output pixel (pixel no.n) must meet all of conditions A to C shown below.

A : Greater than the output of pixel no.(n-1) and greater than or equal to the output of pixel no.(n+1)

$$D'_{n-1} < D'_n \geqq D'_{n+1}$$

B : Output at or above the maximum pixel threshold

$$D'_n \geqq \mathrm{max_th}$$

C : Output greater than the previous maximum output pixel

③ Set the center-of-gravity calculation range (calc_area) centered on the maximum output pixel (detected in step ②). The outputs of [nmax-(calc_area-1)/2-1] pixels and [nmax+(calc_area-1)/2+1] pixels on both edges 1 pixel outside of the center-of-gravity calculation range are compared. The larger value is made the offset and subtracted from each pixel output in the center-of-gravity calculation range to find the sum (0th moment) of all pixels of that value (using the pixel outputs before smoothing and the offset value).

④ First, 0 is set as the position (nmax) of the maximum output pixel of the value obtained by subtracting the offset from each pixel output in the center-of-gravity calculation range. Next,

weights of -1 and +1 are placed on the positions of the pixels at both edges and -2 and +2 on the positions of the pixels on the outside. Finally, the sum of those values is set as the 1st moment (using the pixel outputs before smoothing and offset value).

⑤ The center-of-gravity position is calculated from the position (nmax) of the maximum output pixel, the 0th moment, and the 1st moment.

$$\text{Center-of-gravity position} = \text{nmax} + \frac{\text{1st moment}}{\text{0th moment}}$$

⑥ The center-of-gravity position is converted to absolute value coordinates (integer: 9-bit, decimal: 10-bit) using the number of binning pixels and the partial readout start position.