MS1050

电源

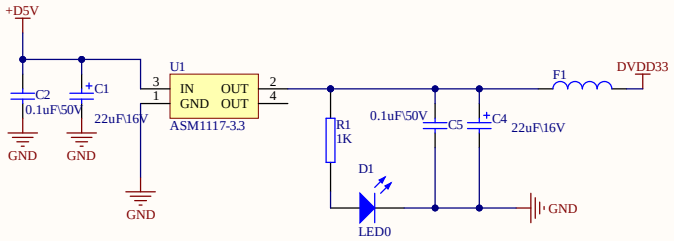
+D5V
C2
0.1uF\50V
C1
22uF\16V
GND
GND
GND
U1
IN
GND
OUT
OUT
ASM1117-3.3
F1
DVDD33
R1
1K
D1
LED0
0.1uF\50V
C5
C4
22uF\16V
GND

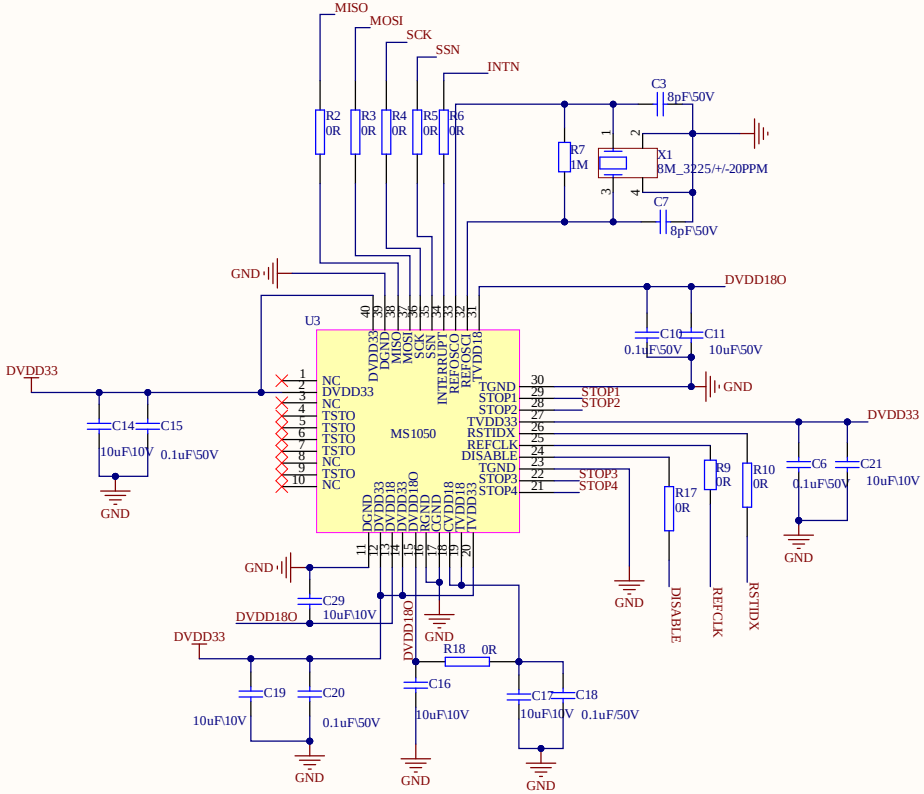
MISO
MOSI
SCK
SSN
INTN
R2
0R
R3
0R
R4
0R
R5
0R
R6
0R
C3
8pF\50V
R7
1M
X1
8M_3225/+/-20PPM
C7
8pF\50V
DVDD18O
C10
0.1uF\50V
C11
10uF\50V
GND
U3
MS1050
DVDD33
C14
10uF\10V
C15
0.1uF\50V
STOP1
STOP2
STOP3
STOP4
RSTIDX
REFCLK
DISABLE
R9
0R
R10
0R
R17
0R
C6
0.1uF\50V
C21
10uF\10V
C29
10uF\10V
C19
10uF\10V
C20
0.1uF\50V
C16
10uF\10V
R18
0R
C17
10uF\10V
C18
0.1uF/50V

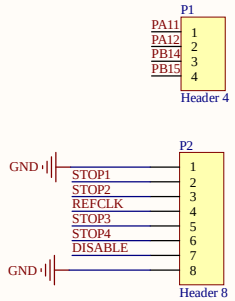
P1
PA11
PA12
PB14
PB15
Header 4
P2
GND
STOP1
STOP2
REFCLK
STOP3
STOP4
DISABLE
Header 8

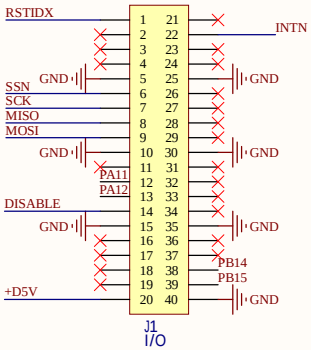
RSTIDX
INTN
SSN
SCK
MISO
MOSI
GND
PA11
PA12
DISABLE
PB14
PB15
+D5V
J1
I/O