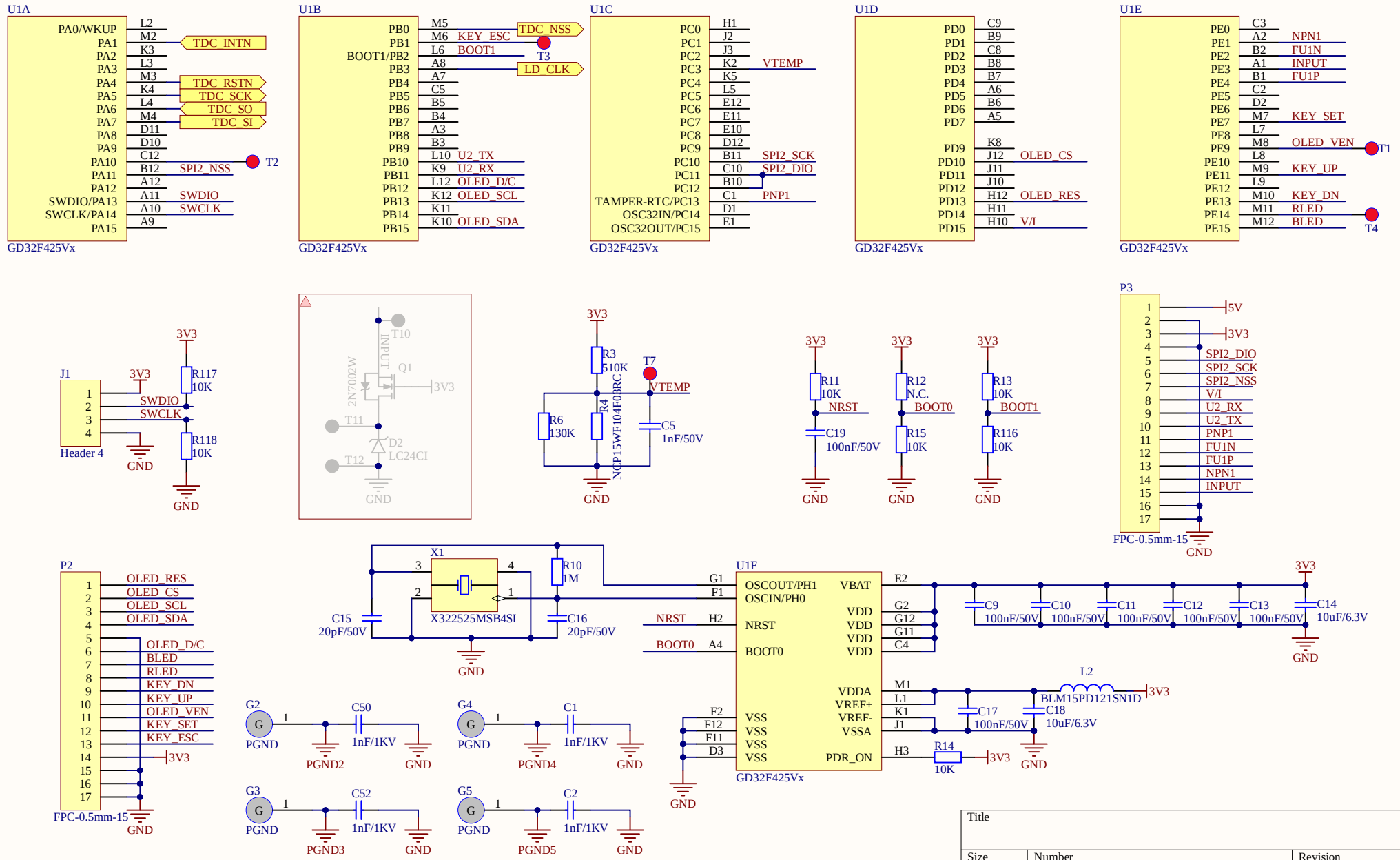

Title		
Size A4	Number	Revision
Date: 11/25/2024		Sheet of
File: D:\HM\..\GD32F425.SchDoc		Drawn By:

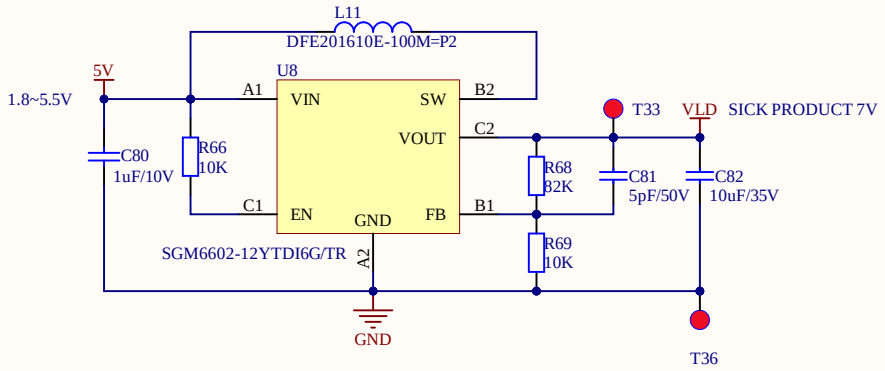

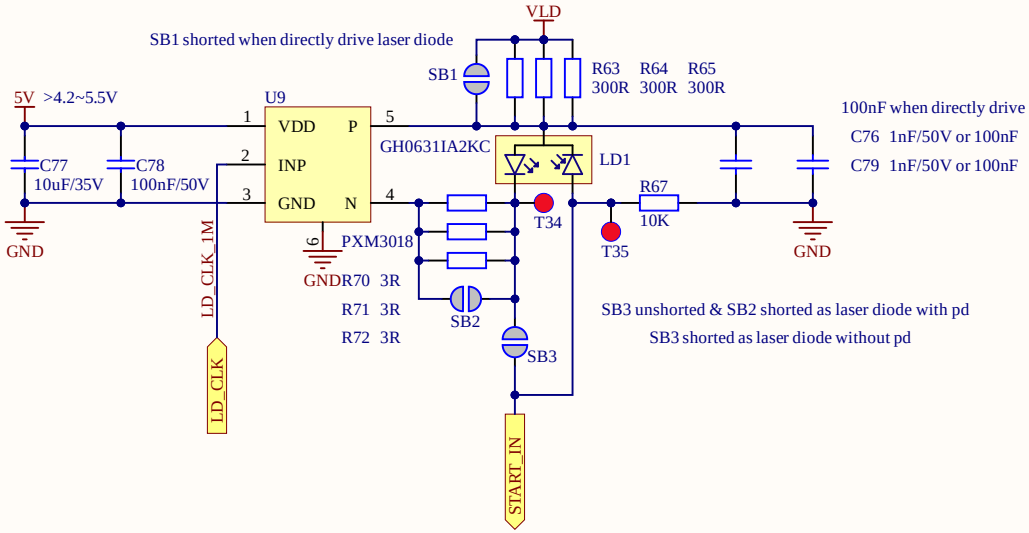

M1 M2 M3 M4 M5 M6

QC1
ZY QC

ESD1
ESD-MARK

PB1
no Pb

UR1
UR

Title		
Size A4	Number	Revision
Date: 11/25/2024		Sheet of
File: D:\HM\..\LD_Driver.SchDoc		Drawn By:

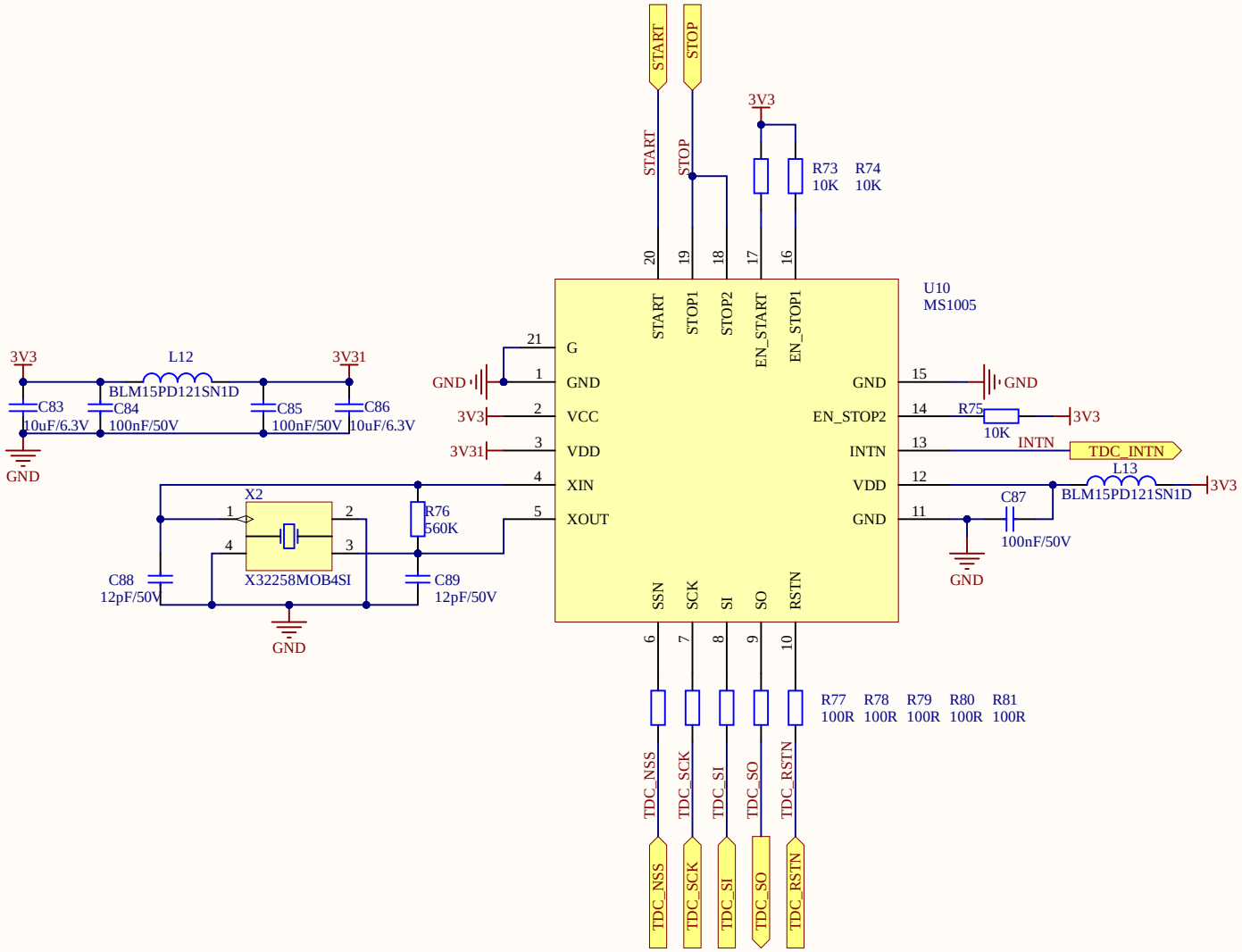

Title		
Size A4	Number	Revision
Date: 11/25/2024		Sheet of
File: D:\HM\..\MS1005.SchDoc		Drawn By:

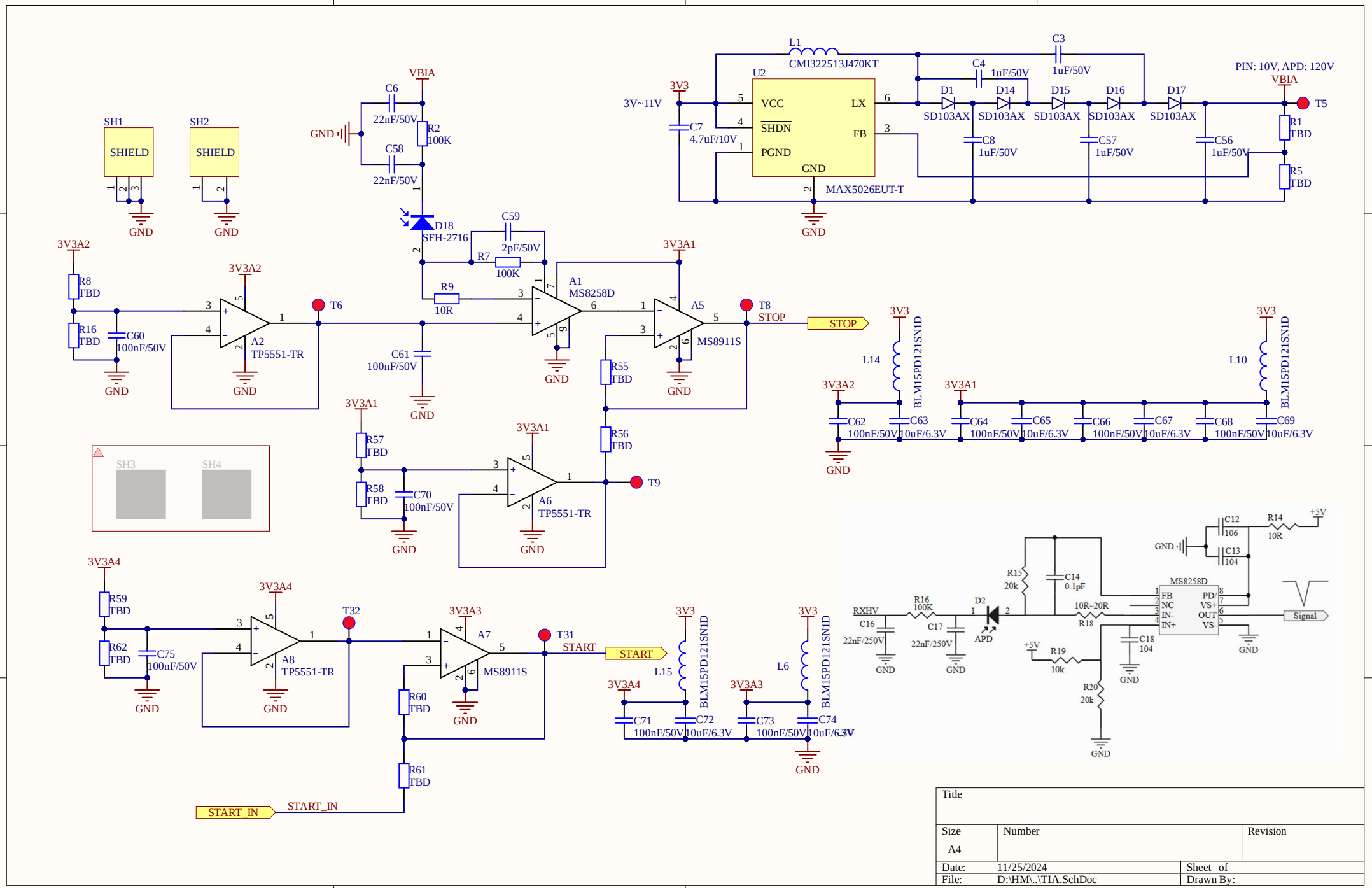

Title		
Size A4	Number	Revision
Date: 11/25/2024		Sheet of
File: D:\HM\..\TIA.SchDoc		Drawn By: