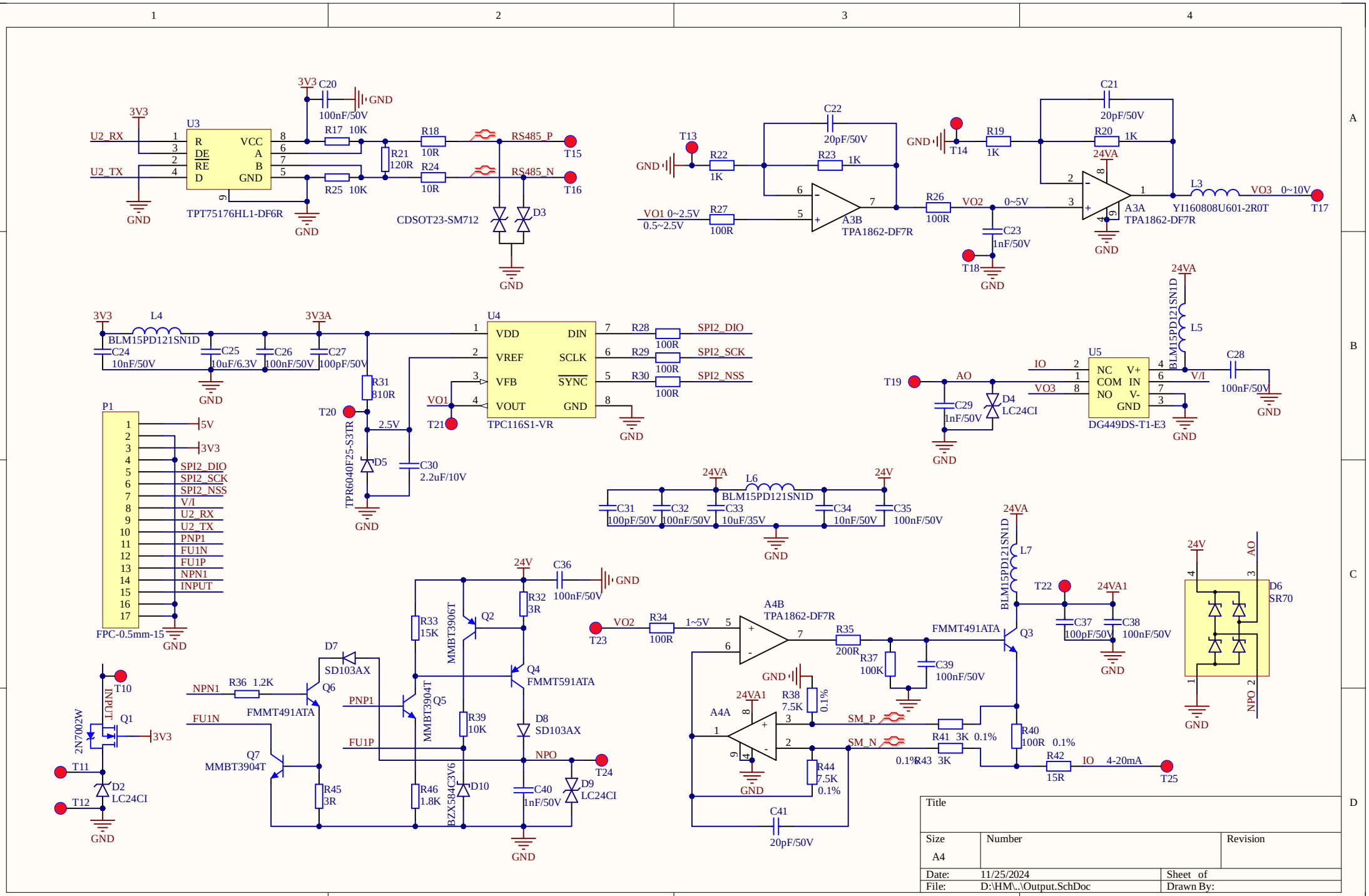

Title		
Size A4	Number	Revision
Date: 11/25/2024		Sheet of
File: D:\HM\..\Output.SchDoc		Drawn By:

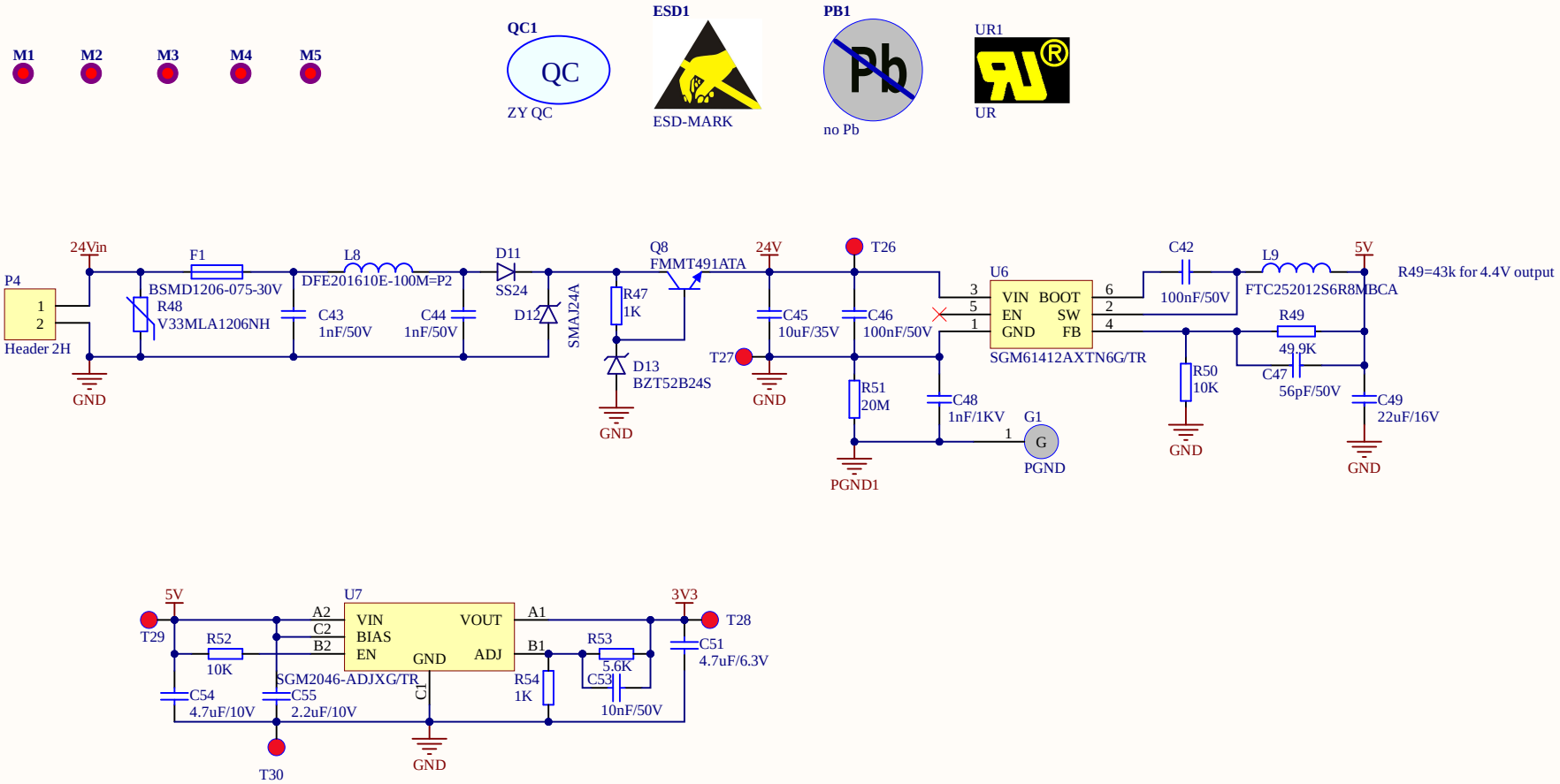

Title		
Size A4	Number	Revision
Date: 11/25/2024		Sheet of
File: D:\HM\..\Power.SchDoc		Drawn By: