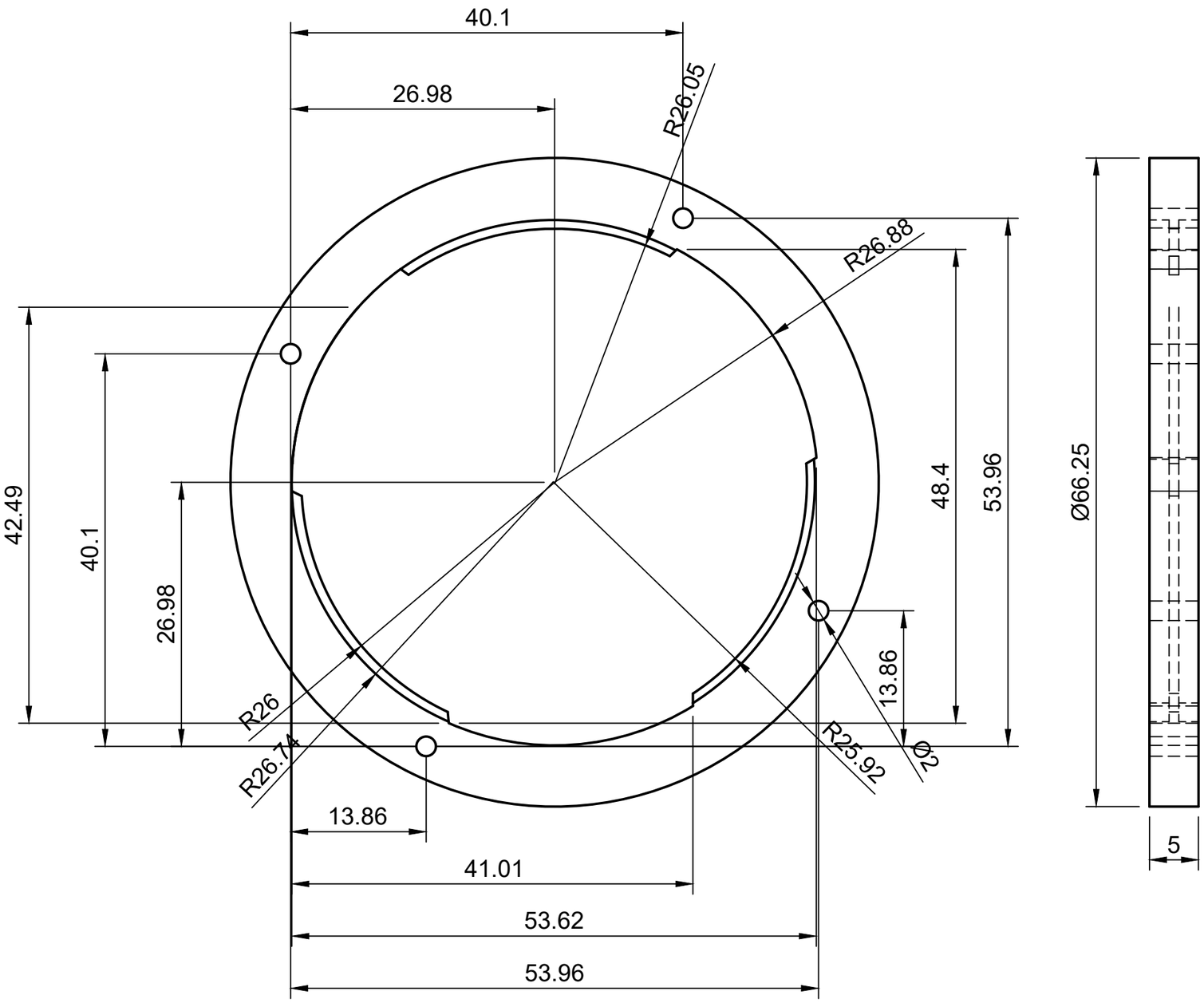

Dept.	Technical reference	Created by	Approved by
		Edern Ollivier 02/07/2025	
		Document type	Document status
		Title Bague4	DWG No.
			Rev. / Date of issue / Sheet 1/1