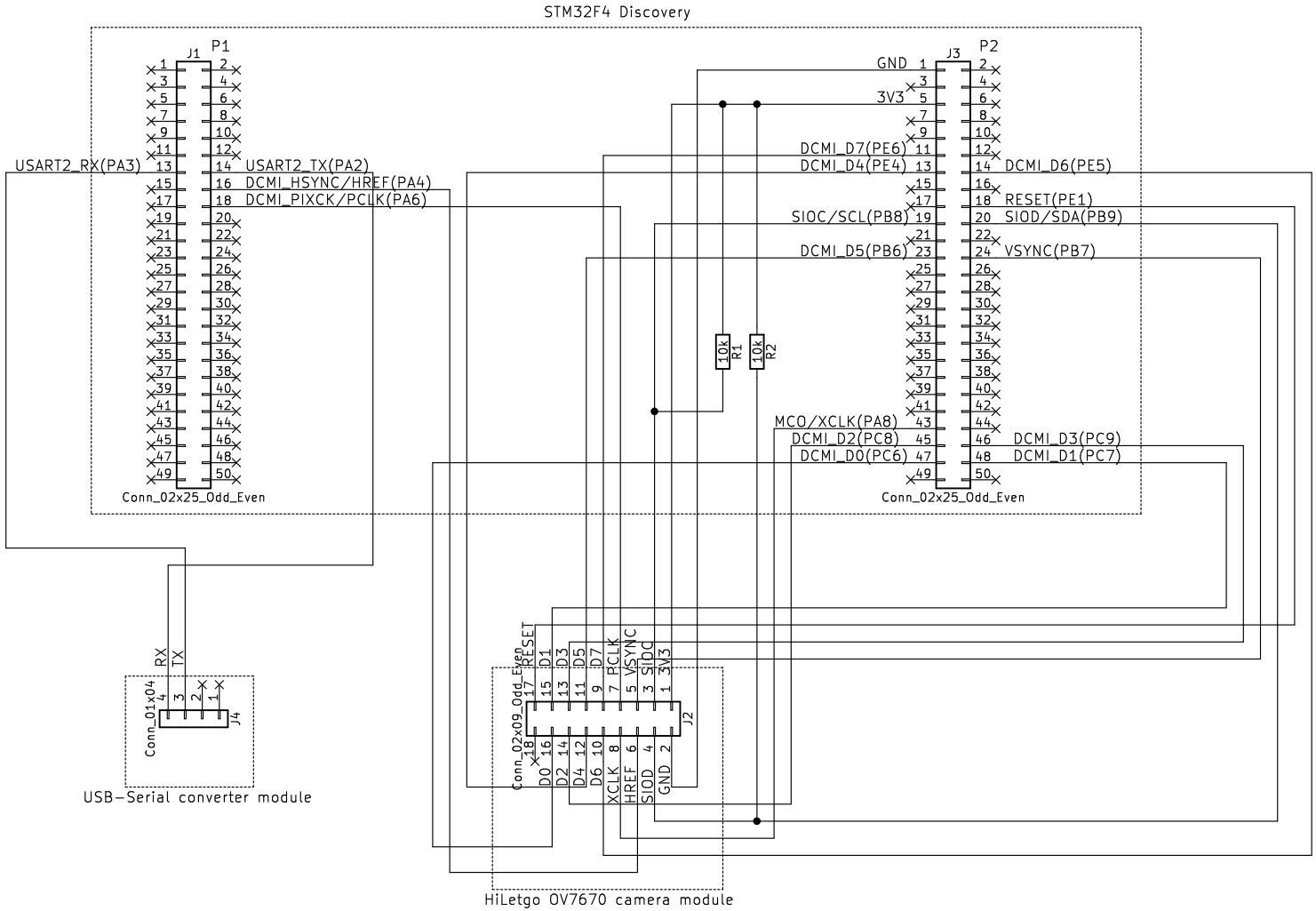

https://github.com/araobp

Sheet: /

File: ov7670_expansion_board.sch

Title: OV7670 expansion board for STM32F4 DISCO

Size: A4	Date: 2019-02-13	Rev:
KiCad E.D.A. kicad 4.0.7		Id: 1/1