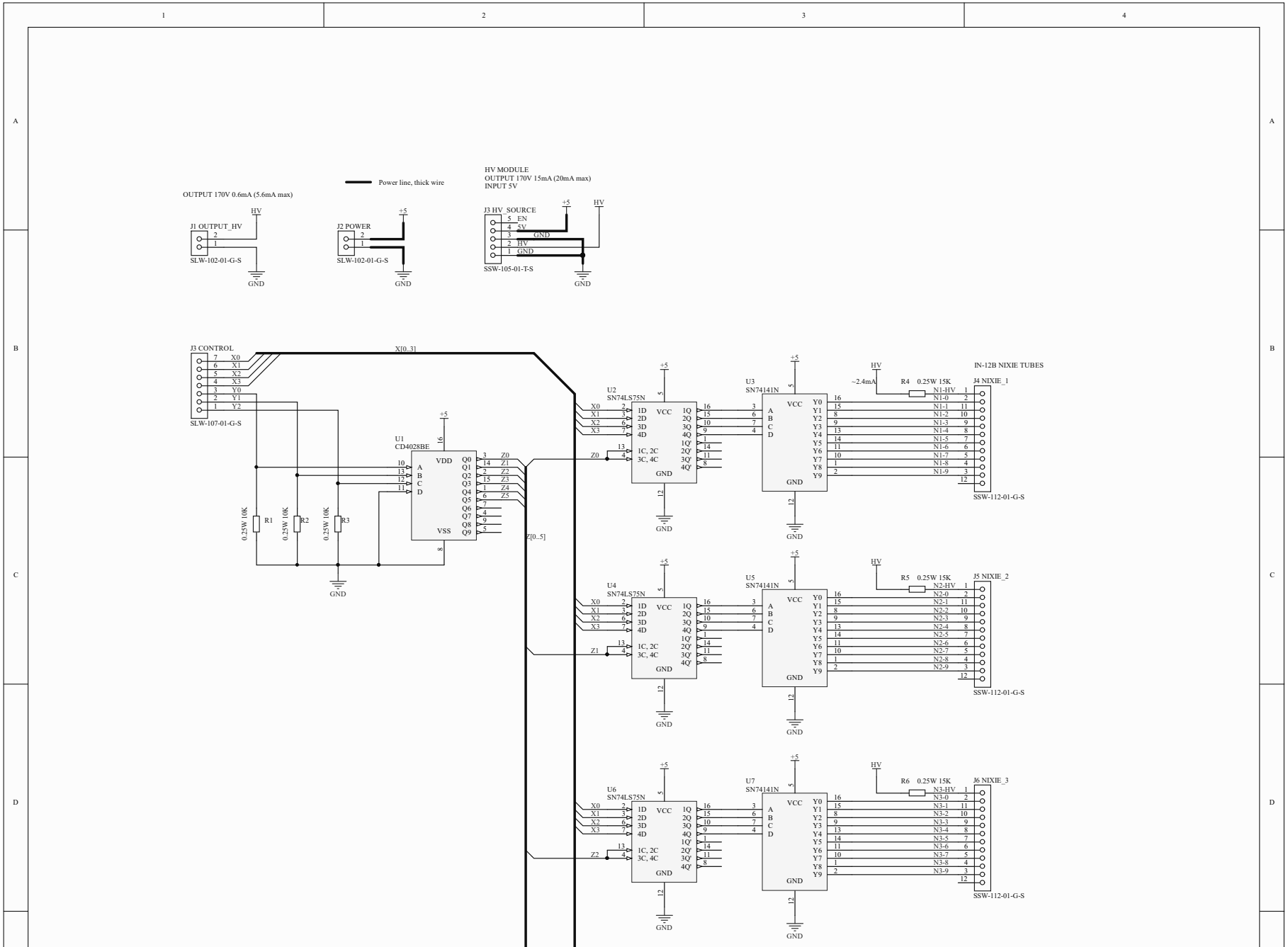
Power line, thick wire
OUTPUT 170V 0.6mA (5.6mA max)
J1 OUTPUT_HV
SLW-102-01-G-S
J2 POWER
SLW-102-01-G-S
HV MODULE
OUTPUT 170V 15mA (20mA max)
INPUT 5V
J3 HV_SOURCE
SSW-105-01-T-S
J3 CONTROL
SLW-107-01-G-S
X[0..3]
Z[0..5]
U1
CD4028BE
R1 0.25W 10K
R2 0.25W 10K
R3 0.25W 10K
U2
SN74LS75N
U3
SN74141N
~2.4mA
R4 0.25W 15K
IN-12B NIXIE TUBES
J4 NIXIE_1
SSW-112-01-G-S
U4
SN74LS75N
U5
SN74141N
R5 0.25W 15K
J5 NIXIE_2
SSW-112-01-G-S
U6
SN74LS75N
U7
SN74141N
R6 0.25W 15K
J6 NIXIE_3
SSW-112-01-G-S
GND

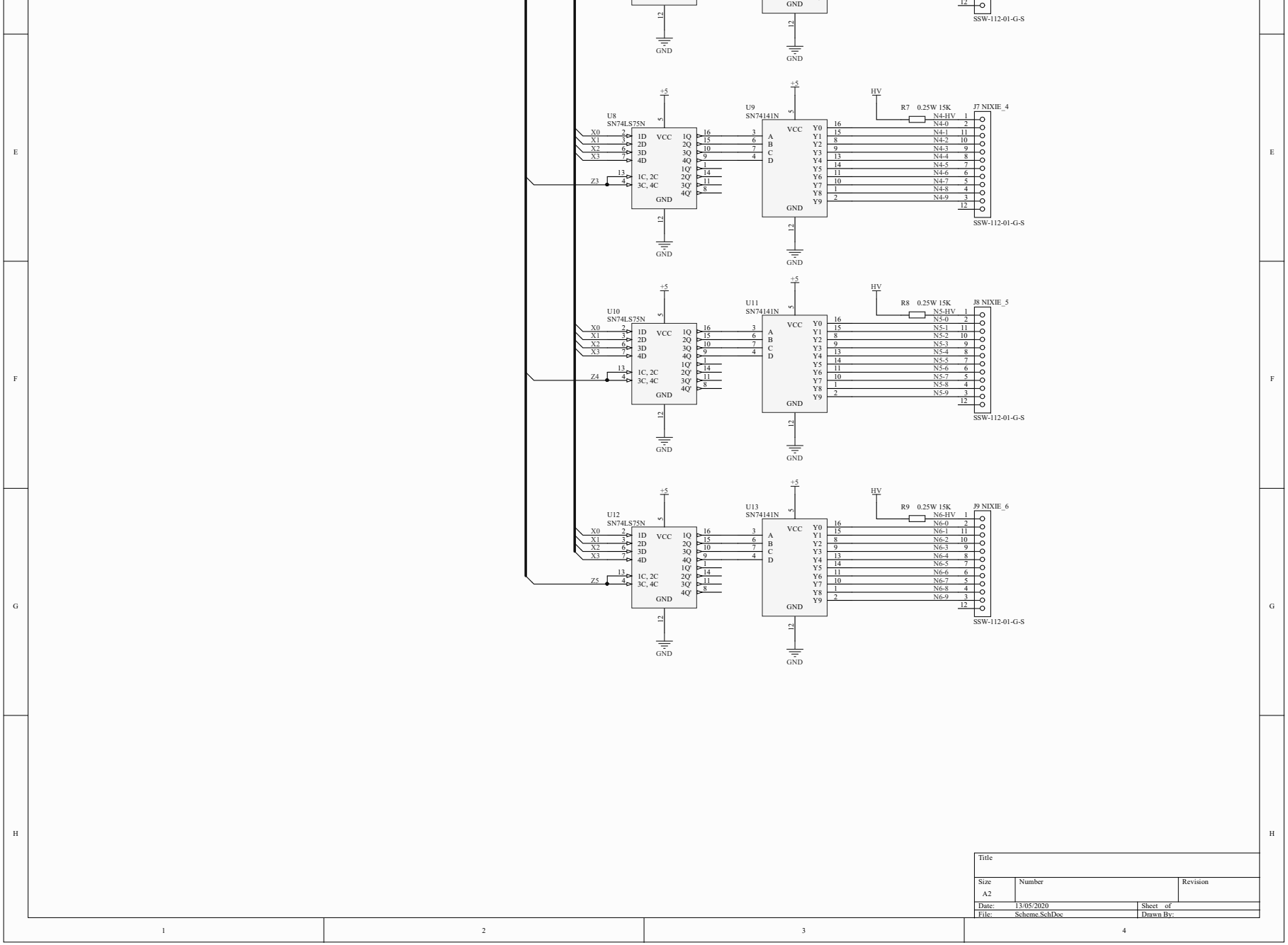

Title		
Size A2	Number	Revision
Date: 13/05/2020		Sheet of
File: Scheme.SchDoc		Drawn By:

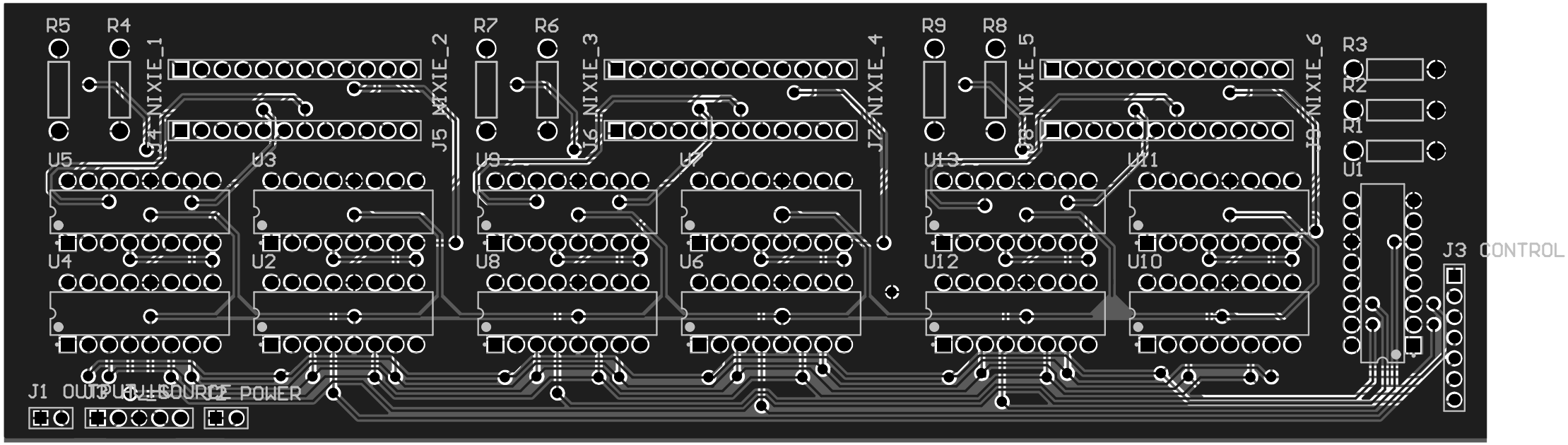
R5
R4
J4 NIXIE_1
J5 NIXIE_2
R7
R6
J6 NIXIE_3
J7 NIXIE_4
R9
R8
J8 NIXIE_5
J9 NIXIE_6
R3
R2
R1
U1
U5
U3
U9
U7
U13
U11
U4
U2
U8
U6
U12
U10
J3 CONTROL
J1 OUTPUT
U14 SOURCE POWER

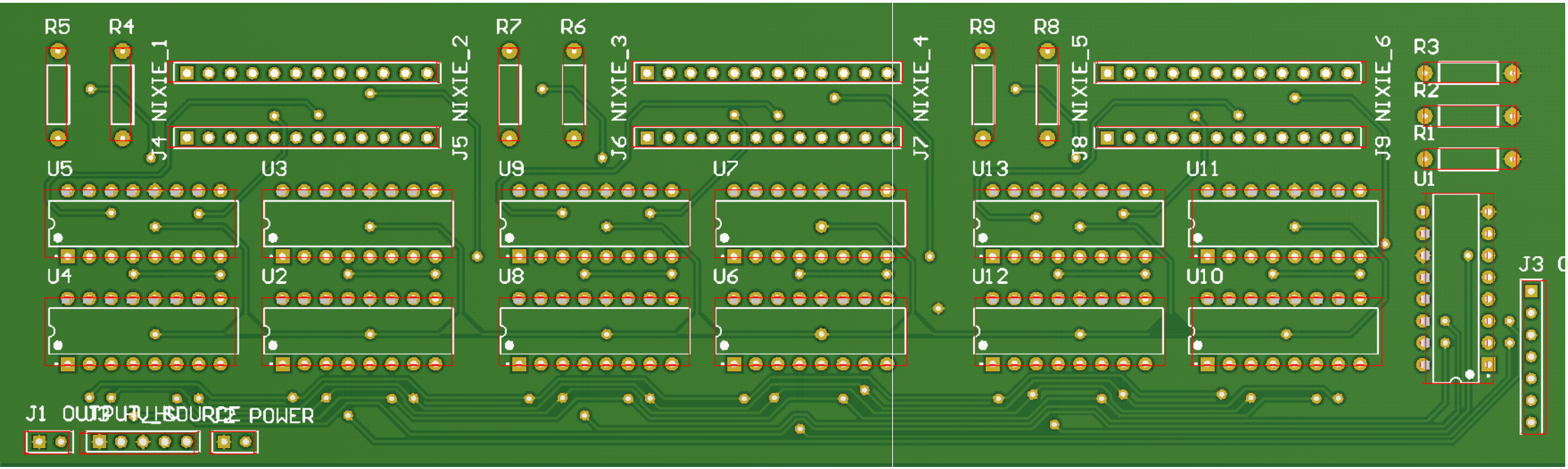
R5
R4
J4 NIXIE_1
J5 NIXIE_2
R7
R6
J6 NIXIE_3
J7 NIXIE_4
R9
R8
J8 NIXIE_5
J9 NIXIE_6
R3
R2
R1
U5
U3
U9
U7
U13
U11
U1
U4
U2
U8
U6
U12
U10
J3
J1 OUTPUT
J2 POWER