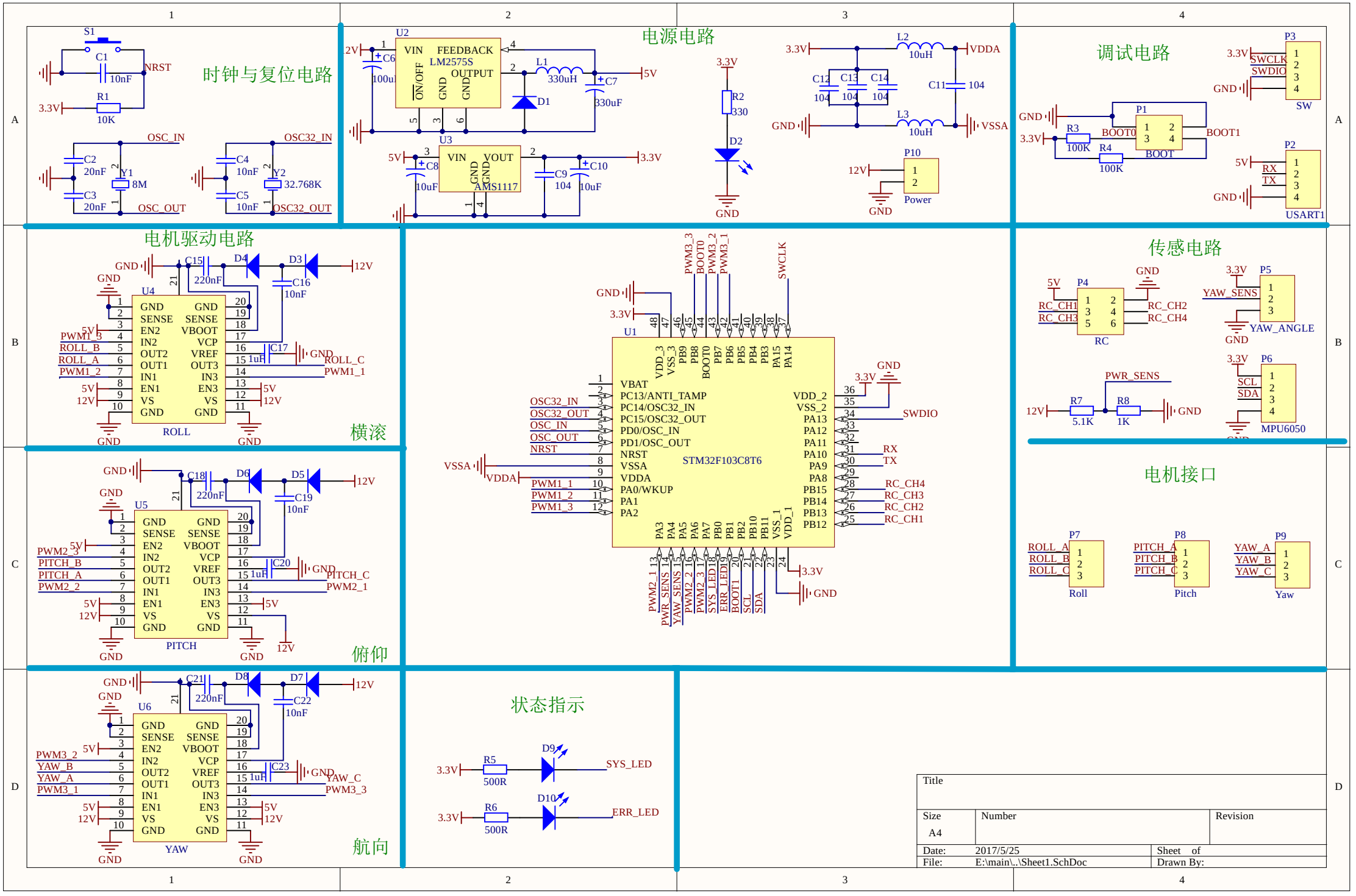
时钟与复位电路
S1
C1
10nF
NRST
R1
10K
3.3V
OSC_IN
OSC32_IN
C2
20nF
Y1
8M
C3
20nF
OSC_OUT
C4
10nF
Y2
32.768K
C5
10nF
OSC32_OUT
电源电路
U2
VIN
FEEDBACK
LM2575S
OUTPUT
ON/OFF
GND
GND
L1
330uH
D1
C6
100u
C7
330uF
5V
U3
VIN
VOUT
GND
GND
AMS1117
C8
10uF
C9
104
C10
10uF
3.3V
R2
330
D2
GND
L2
10uH
VDDA
C12
104
C13
104
C14
104
C11
104
L3
10uH
VSSA
P10
Power
12V
调试电路
P3
SWCLK
SWDIO
SW
P1
BOOT0
BOOT1
BOOT
R3
100K
R4
100K
P2
RX
TX
USART1
电机驱动电路
U4
ROLL
C15
220nF
D4
D3
C16
10nF
C17
1uF
PWM1_3
ROLL_B
ROLL_A
PWM1_2
ROLL_C
PWM1_1
横滚
U5
PITCH
C18
220nF
D6
D5
C19
10nF
C20
1uF
PWM2_3
PITCH_B
PITCH_A
PWM2_2
PITCH_C
PWM2_1
俯仰
U6
YAW
C21
220nF
D8
D7
C22
10nF
C23
1uF
PWM3_2
YAW_B
YAW_A
PWM3_1
YAW_C
PWM3_3
航向
U1
STM32F103C8T6
VBAT
PC13/ANTI_TAMP
PC14/OSC32_IN
PC15/OSC32_OUT
PD0/OSC_IN
PD1/OSC_OUT
NRST
VSSA
VDDA
PA0/WKUP
PA1
PA2
VDD_2
VSS_2
PA13
PA12
PA11
PA10
PA9
PA8
PB15
PB14
PB13
PB12
SWDIO
RX
TX
RC_CH4
RC_CH3
RC_CH2
RC_CH1
传感电路
P4
RC
RC_CH1
RC_CH3
RC_CH2
RC_CH4
P5
YAW_SENS
YAW_ANGLE
PWR_SENS
R7
5.1K
R8
1K
P6
SCL
SDA
MPU6050
电机接口
P7
ROLL_A
ROLL_B
ROLL_C
Roll
P8
PITCH_A
PITCH_B
PITCH_C
Pitch
P9
YAW_A
YAW_B
YAW_C
Yaw
状态指示
R5
500R
D9
SYS_LED
R6
500R
D10
ERR_LED
Title
Size
A4
Number
Revision
Date: 2017/5/25
Sheet of
File: E:\main\..\Sheet1.SchDoc
Drawn By:

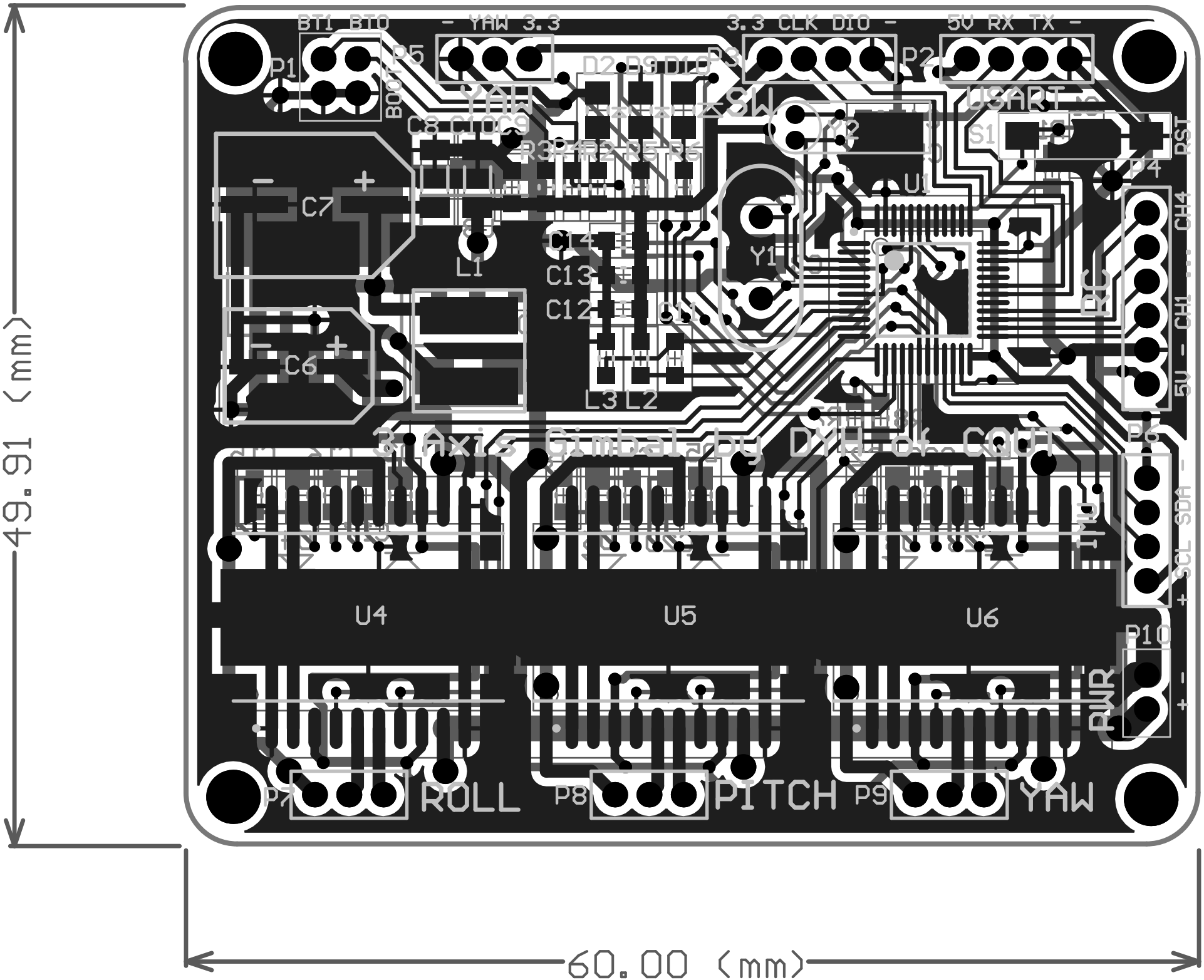
BT1 BTO
- YAW 3.3
3.3 CLK DIO -
5V RX TX -
P1
P5
P3
P2
BOOT
YAW
D2 P9 D10
USART
C8 C10 C9
R3 R4 R2 R5 R6
Y2
S1
P4
RST
C7
L1
C14
C13
C12
Y1
U1
PIC
CH4
CH1
5V -
C6
L3 L2
3 Axis Gimbal by DYU-ok Cart
P6
SCL SDA -
U4
U5
U6
P10
PWR
+ -
P7
ROLL
P8
PITCH
P9
YAW
49.91 (mm)
60.00 (mm)