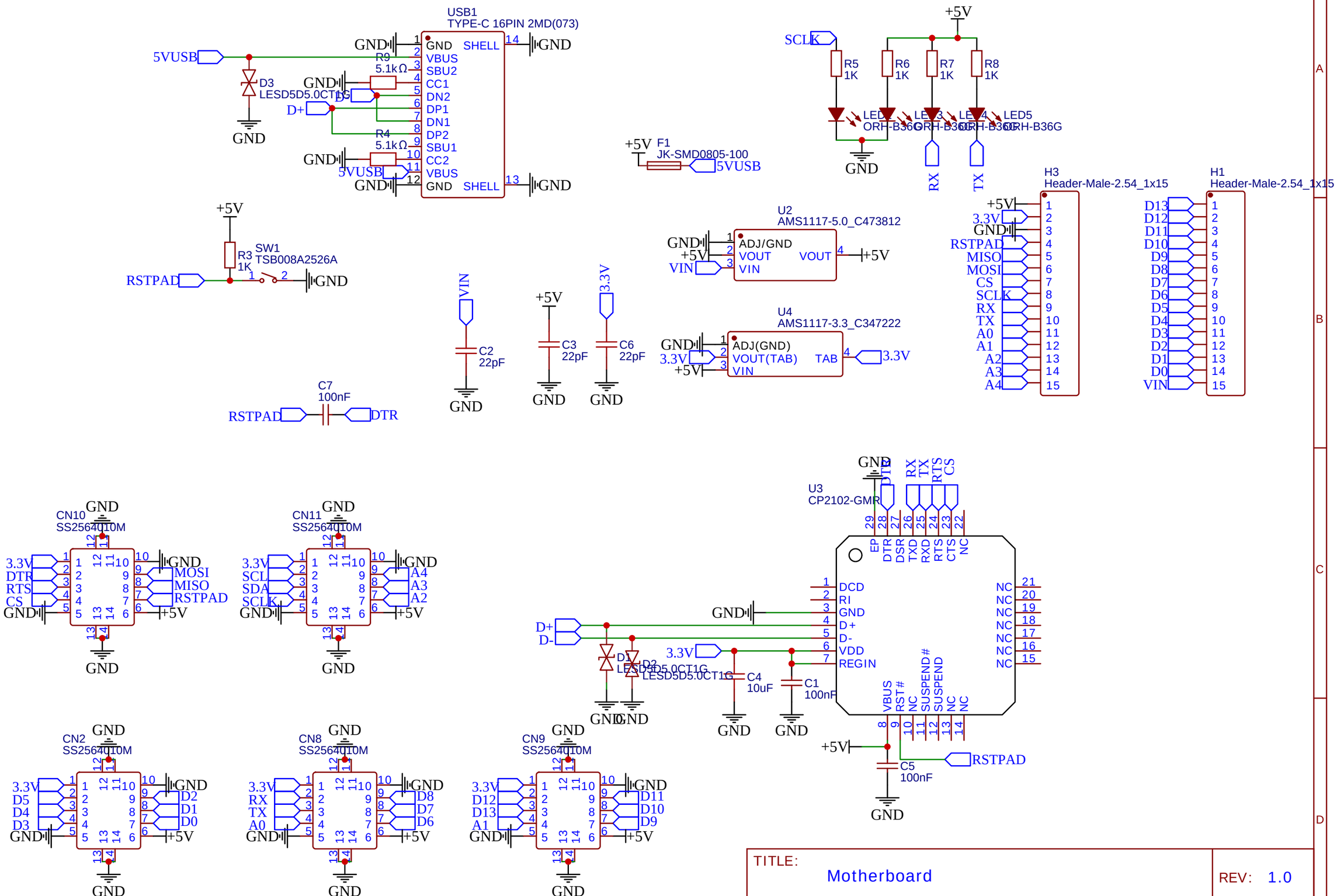

TITLE: Motherboard

REV: 1.0

Company: Your Company

Sheet: 1/1

Date: 2022-10-20

Drawn By: baggioedoardo03