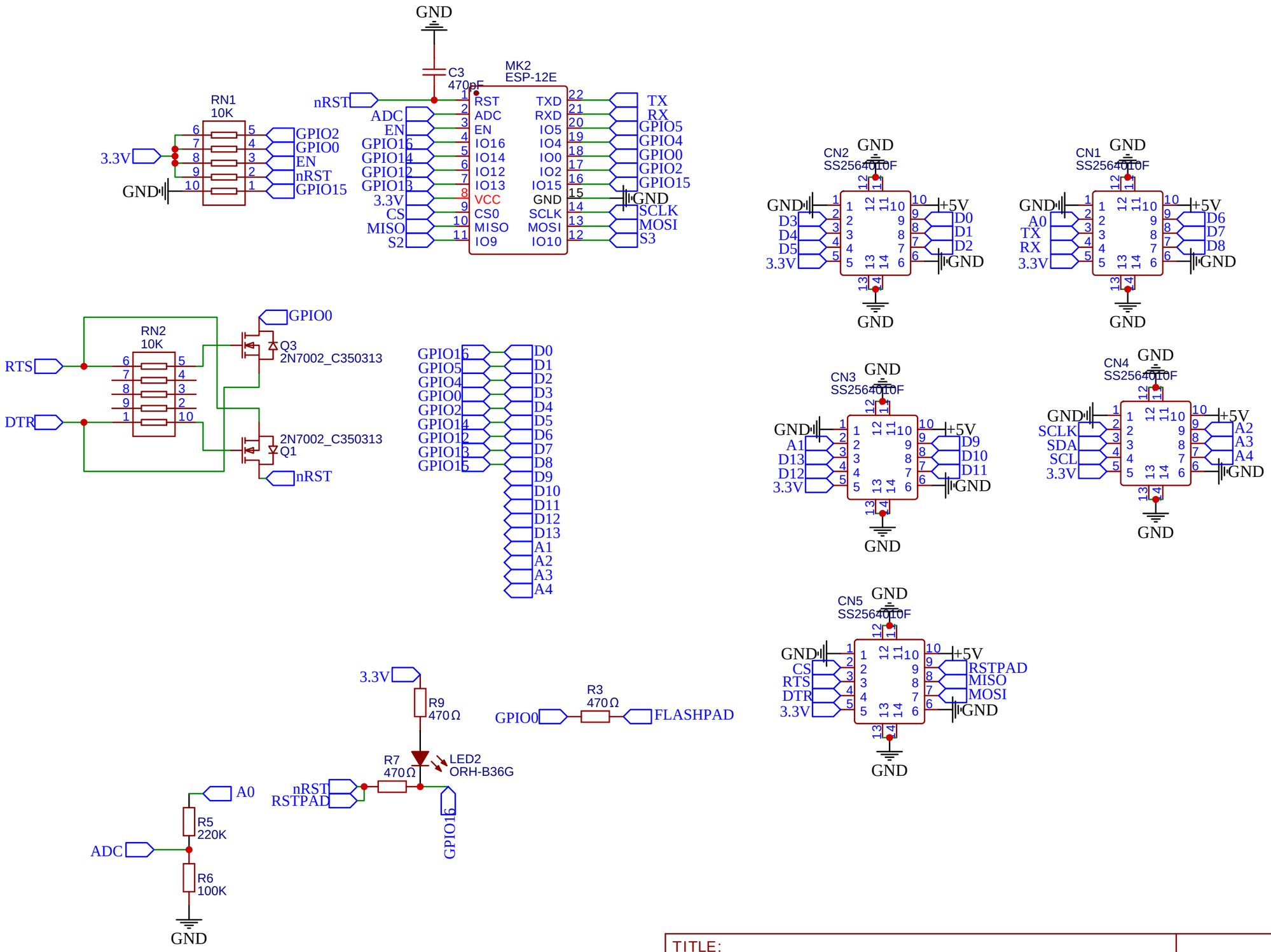

TITLE: Sheet_1	REV: 1.0
Company: Your Company	Sheet: 1/1
Date: 2022-06-01 Drawn By: baggioedoardo03	

EasyEDA