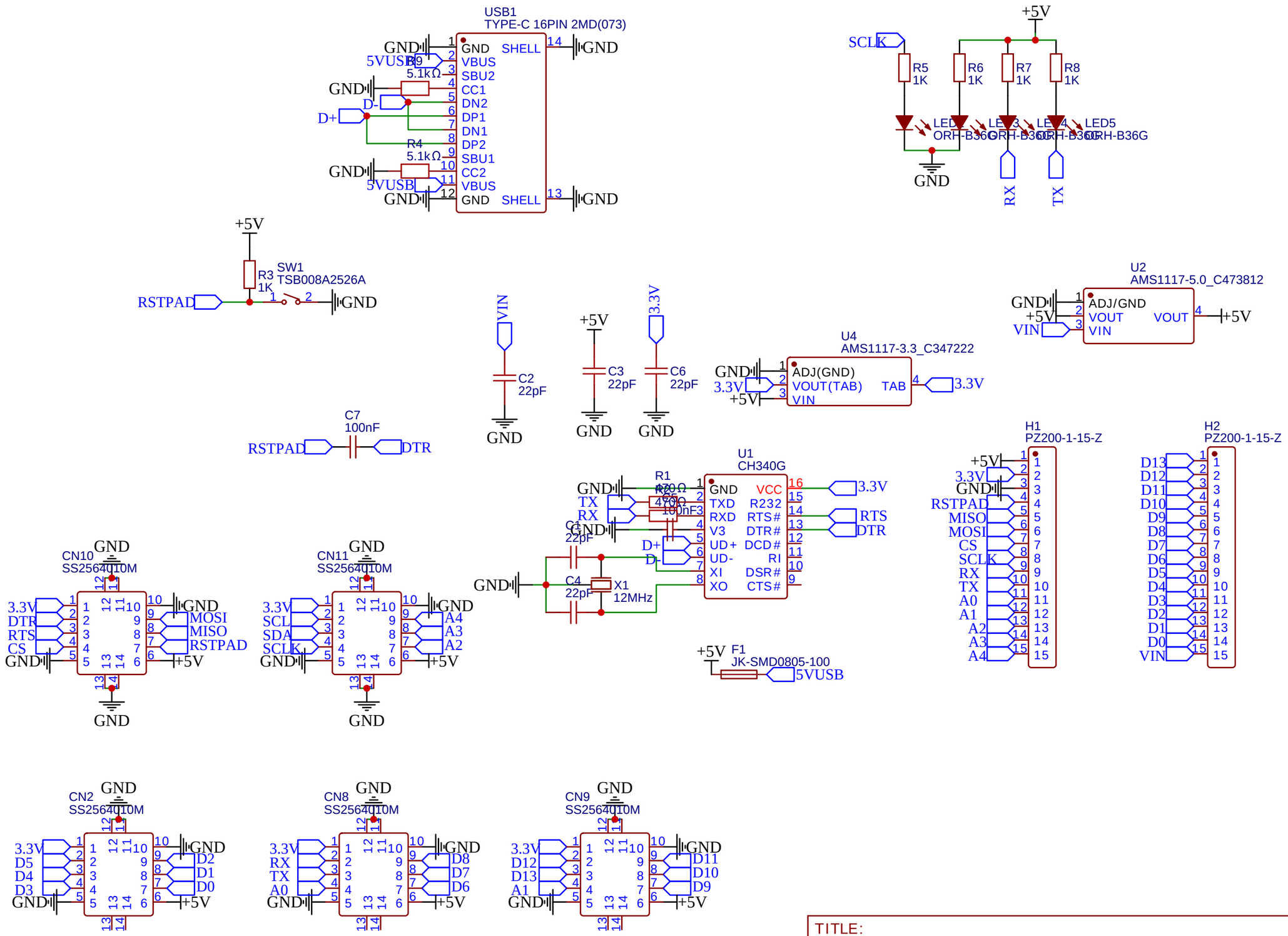

TITLE: Motherboard	REV: 1.0
Company: Your Company	Sheet: 1/1
Date: 2022-10-20 Drawn By: baggioedoardo03	

EasyEDA