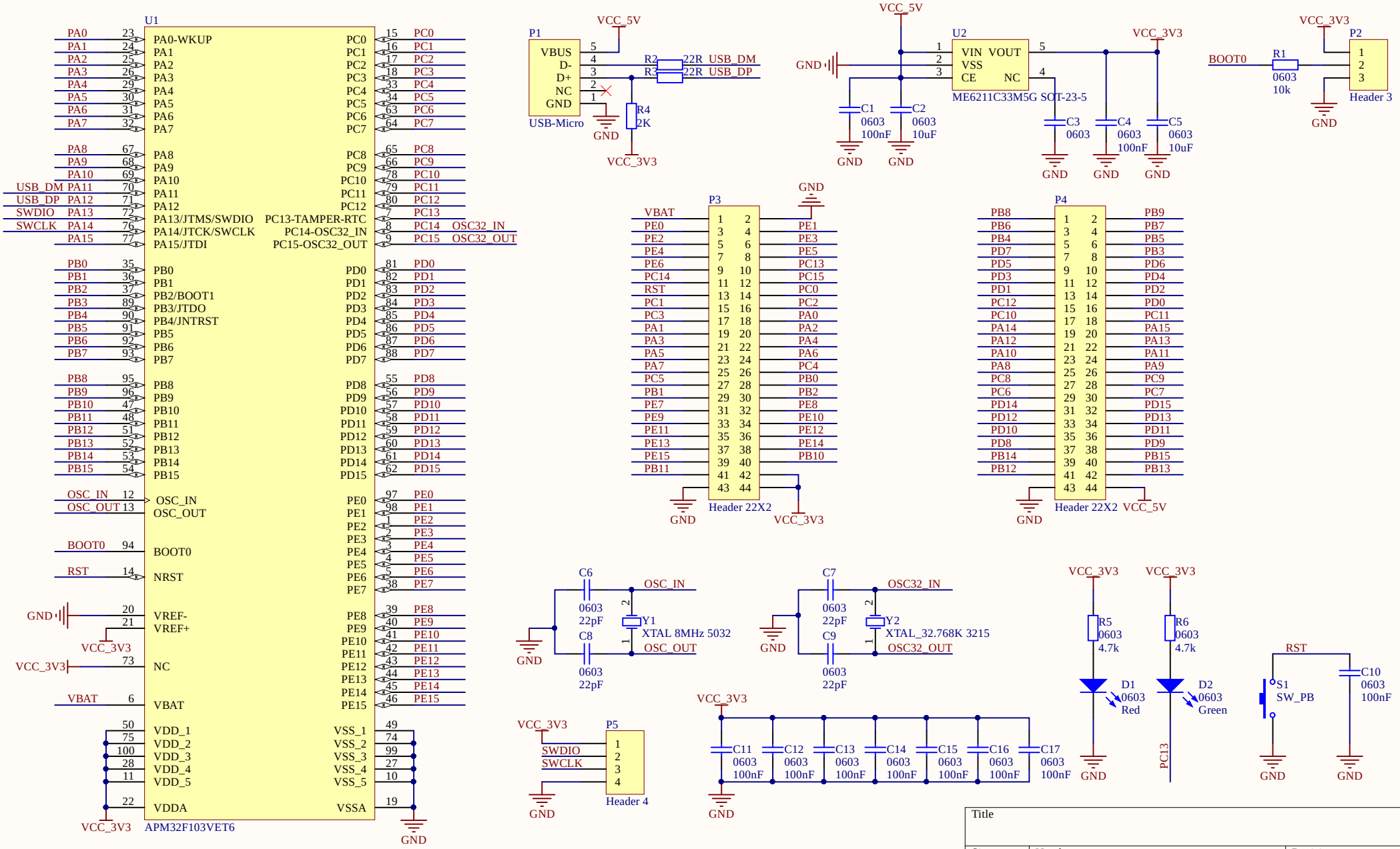
U1
APM32F103VET6
PA0-WKUP
PA1
PA2
PA3
PA4
PA5
PA6
PA7
PA8
PA9
PA10
PA11
PA12
PA13/JTMS/SWDIO
PA14/JTCK/SWCLK
PA15/JTDI
PB0
PB1
PB2/BOOT1
PB3/JTDO
PB4/JNTRST
PB5
PB6
PB7
PB8
PB9
PB10
PB11
PB12
PB13
PB14
PB15
OSC_IN
OSC_OUT
BOOT0
NRST
VREF-
VREF+
NC
VBAT
VDD_1
VDD_2
VDD_3
VDD_4
VDD_5
VDDA
PC13-TAMPER-RTC
PC14-OSC32_IN
PC15-OSC32_OUT
VSS_1
VSS_2
VSS_3
VSS_4
VSS_5
VSSA
USB_DM
USB_DP
SWDIO
SWCLK
OSC32_IN
OSC32_OUT
VCC_3V3
GND
P1
USB-Micro
VBUS
D-
D+
NC
GND
R2 22R USB_DM
R3 22R USB_DP
R4 2K
U2
ME6211C33M5G SOT-23-5
VIN VOUT
VSS
CE NC
C1 0603 100nF
C2 0603 10uF
C3 0603
C4 0603 100nF
C5 0603 10uF
P2
Header 3
R1 0603 10k
P3
Header 22X2
P4
Header 22X2
C6 0603 22pF
C7 0603 22pF
C8 0603 22pF
C9 0603 22pF
Y1 XTAL 8MHz 5032
Y2 XTAL_32.768K 3215
P5
Header 4
C11 0603 100nF
C12 0603 100nF
C13 0603 100nF
C14 0603 100nF
C15 0603 100nF
C16 0603 100nF
C17 0603 100nF
R5 0603 4.7k
R6 0603 4.7k
D1 0603 Red
D2 0603 Green
PC13
S1 SW_PB
C10 0603 100nF
Title
Size A4
Number
Revision
Date: 2020/12/27
File: E:\SSSSIOT\..\APM32F103VET6核心板原理图.SchDoc
Sheet of
Drawn By: