ESP32-Azure IoT Kit

Hardware Design Guide

Version 1.0

Espressif Systems

Copyright © 2018

About This Guide

The ESP32-Azure IoT Kit Hardware Design Guidelines introduces the block diagram, PCB layout and function modules of the development board ESP32-Azure IoT Kit.

Release Notes

Date	Version	Release notes
2018.10	V1.0	Initial release.

Documentation Change Notification

Espressif provides email notifications to keep customers updated on changes to technical documentation. Please subscribe at *https://www.espressif.com/en/subscribe*.

Certification

Download certificates for Espressif products from *https://www.espressif.com/en/certificates*.

Table of Contents

1. Block Diagram 1
2. System Component 2
   - 2.1. MCU 2
   - 2.2. Sensor 2
   - 2.3. USB-to-UART Bridge 3
   - 2.4. Power Supply 3
   - 2.5. Expanded Interface 3
   - 2.6. OLED Display 3
   - 2.7. Tactile Button, Buzzer and LED Display 3
3. PCB Design 4
   - 3.1. Product Image 4
   - 3.2. PCB Layout 5
4. Schematic 6

1. Block Diagram

The block diagram below illustrates the main components of the ESP32-Azure IoT Kit and their interconnections.

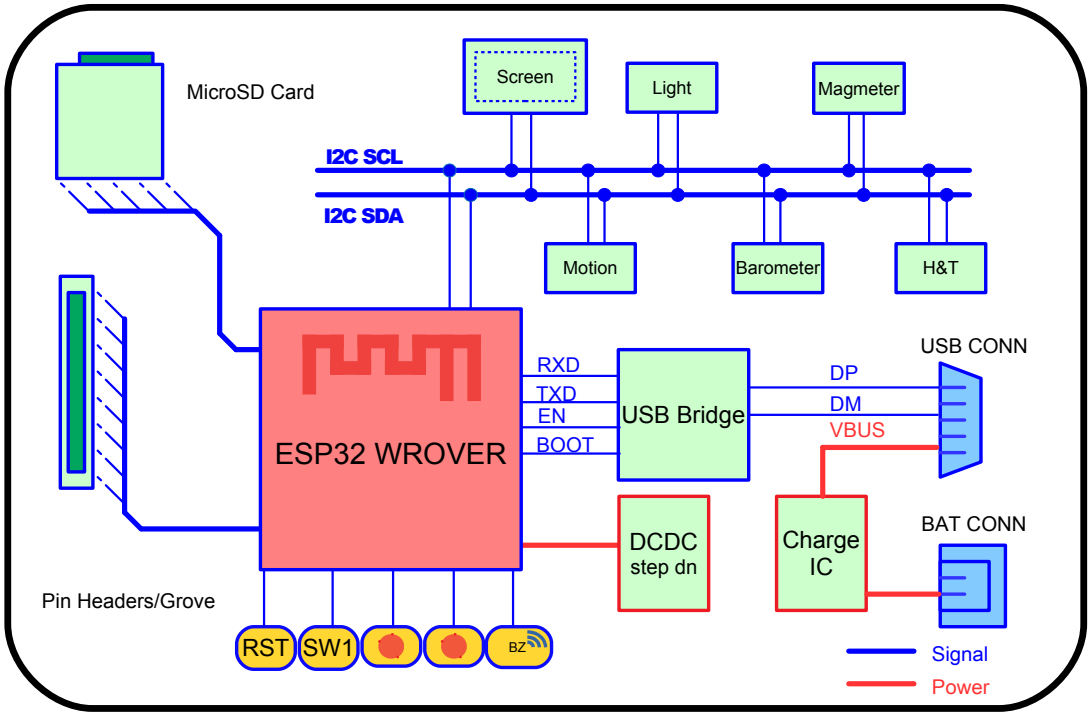

2. System Component

2.1. MCU

The ESP32-Azure IoT Kit is a development board built around the ESP32 chip, which is a single 2.4 GHz Wi-Fi-and-Bluetooth combo chip designed with the TSMC ultra-low-power 40 nm technology. It is designed to achieve the best power and RF performance, showing robustness, versatility and reliability in a wide variety of applications and power scenarios.

2.2. Sensor

Component	Model	Manufacturer	Description
Motion Sensor	MPU6050	InvenSense	• Digital-output X-, Y-, and Z-Axis angular rate sensors • Digital-output triple-axis accelerometer (±2 g/±4 g/ ±8 g/±16 g) • Integrated 16-bit ADCs enable simultaneous sampling • Digitally-programmable low-pass filter • Orientation detection and signaling
Magnetometer	MAG3110	NXP	• Sensitivity of 0.10 uT • Noise down to 0.25 uT rms • Output Data Rates (ODR) up to 80 Hz
Barometer	FBM320	Formosa	• 300 to 1100 hPa pressure range • 8 cm altitude resolution (RMS) • 8 ms pressure conversion time
Sensor (Humidity and Temperature)	HTS221	ST	• 0 to 100% relative humidity range • Humidity accuracy: ± 3.5% rH, 20 to +80% rH • High rH sensitivity: 0.004% rH/LSB • Temperature accuracy: ± 0.5 °C,15 to +40 °C • Selectable ODR from 1 Hz to 12.5 Hz • Embedded 16-bit ADC
Sensor (Light)	BH1750FVI	ROHM	• Illuminance to Digital Converter • Wide range and High resolution (1 - 65535 lx) • Small measurement variation (± 20%)

2.3. USB-to-UART Bridge

The USB-to-UART Bridge used in the ESP32-Azure IoT Kit is CP2102 USB from Silicon Labs, which supports up to 1 M serial port communication and enables the auto switching between ESP32 boot modes.

2.4. Power Supply

Both USB power and lithium battery can be used to power up the board. When the USB power is used, the power supply circuit to the lithium battery is cut off automatically. The step-down DC-DC converter used in the board has a ultra-low quiescent current, which ensures the board can achieve ultra-low power consumption during deep-sleep.

Besides, there is also a charge management IC on the board, so the USB port can also be used to charge the lithium battery.

2.5. Expanded Interface

The board has 16 through-hole testing points (2.54 mm pitch) to lead out the system power and available module IOs, which can be used to connect pin headers and grove connectors.

Besides, there is also a MicroSD slot on the board, which can be used to connect microSD card by SPI bus.

2.6. OLED Display

A 0.96” blue and yellow OLED display is installed on the board, which integrates a SSD1306 driver chip and supports communication through I2C bus.

2.7. Tactile Button, Buzzer and LED Display

- 1 x system RESET button
- 1 x user-defined button, which can be used to switch between ESP32 boot modes
- 2 x LED indicators, which can be used to indicate if the board has successfully connected to Wi-Fi network or Azure Cloud
- 1 x passive buzzer, which can be used to provide audio feedback

3. PCB Design

A four-layer PCB design is used for the ESP32-Azure IoT Kit. The dimension of board is 54 x 75 cm. The draft PCB design can be seen in this section.

3.1. Product Image

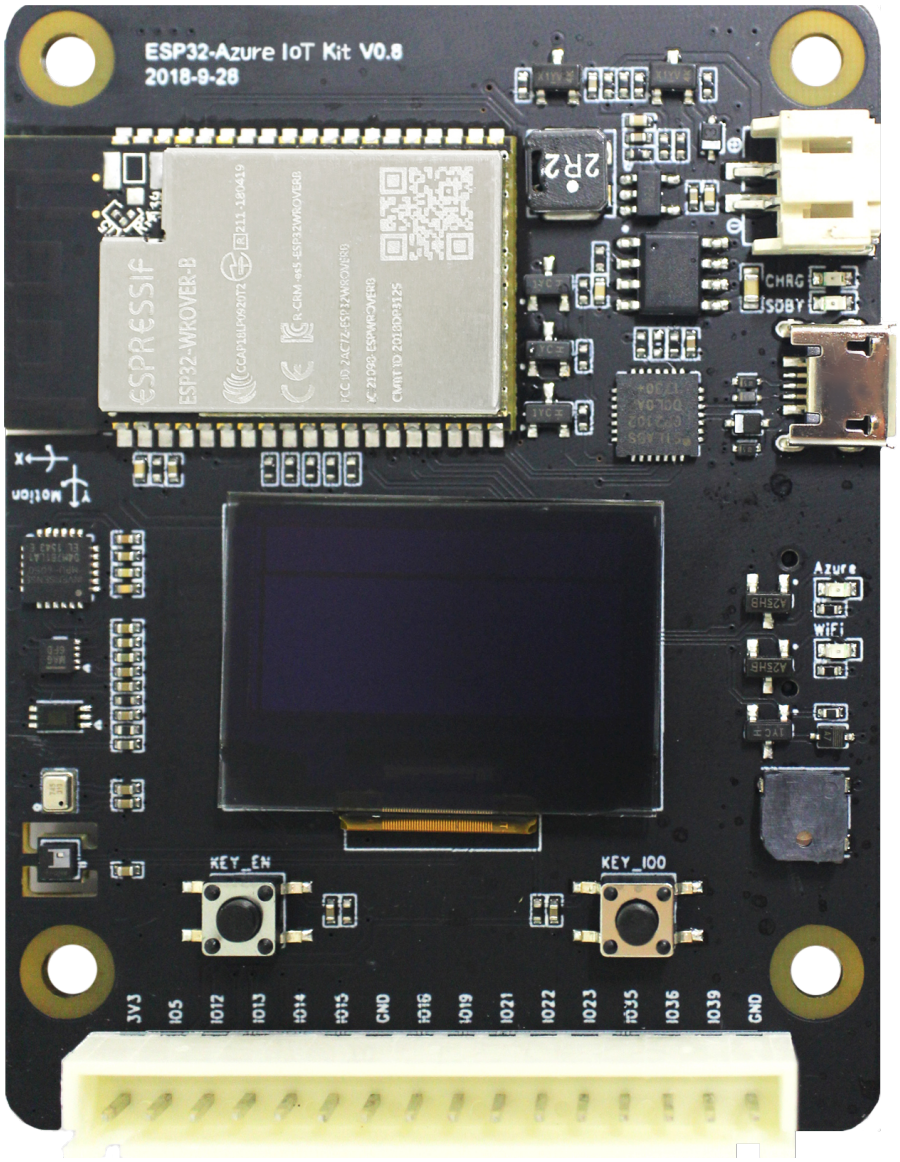

3.2. PCB Layout

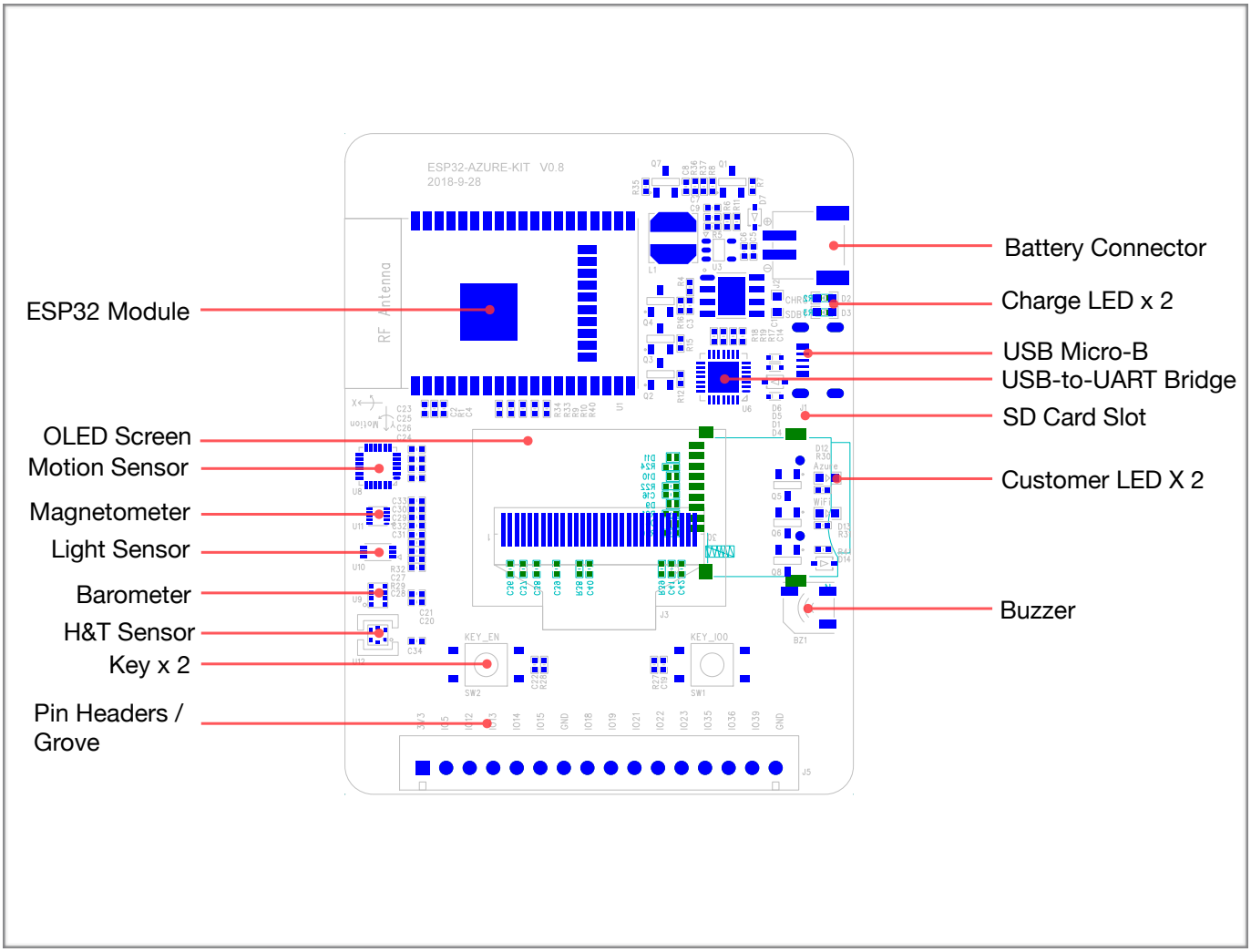

4. Schematic

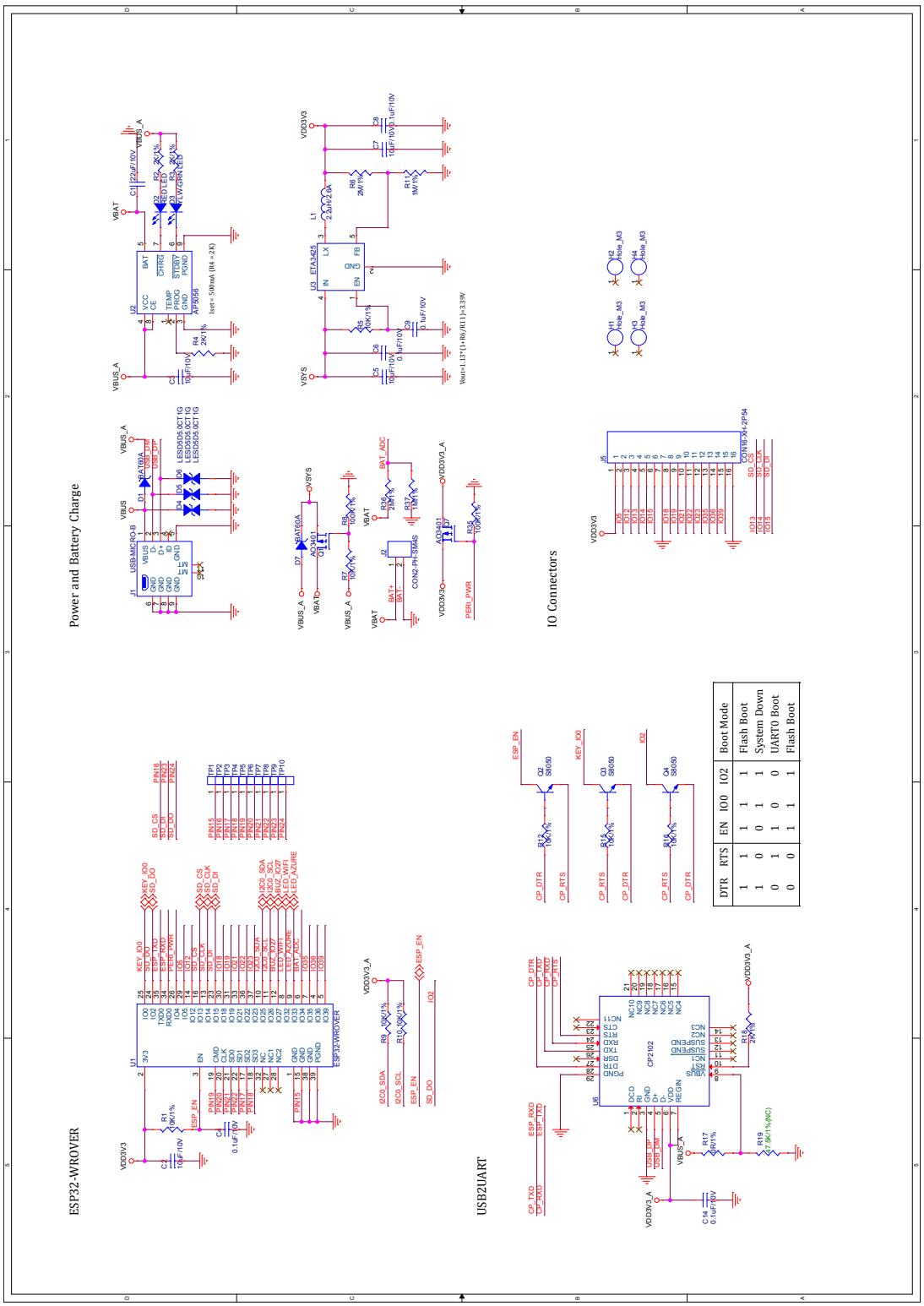
Power and Battery Charge
IO Connectors
ESP32-WROVER
USB2UART
DTR RTS EN IO0 IO2 Boot Mode
1 1 1 1 1 Flash Boot
1 0 0 1 1 System Down
0 1 1 0 0 UART0 Boot
0 0 1 1 1 Flash Boot

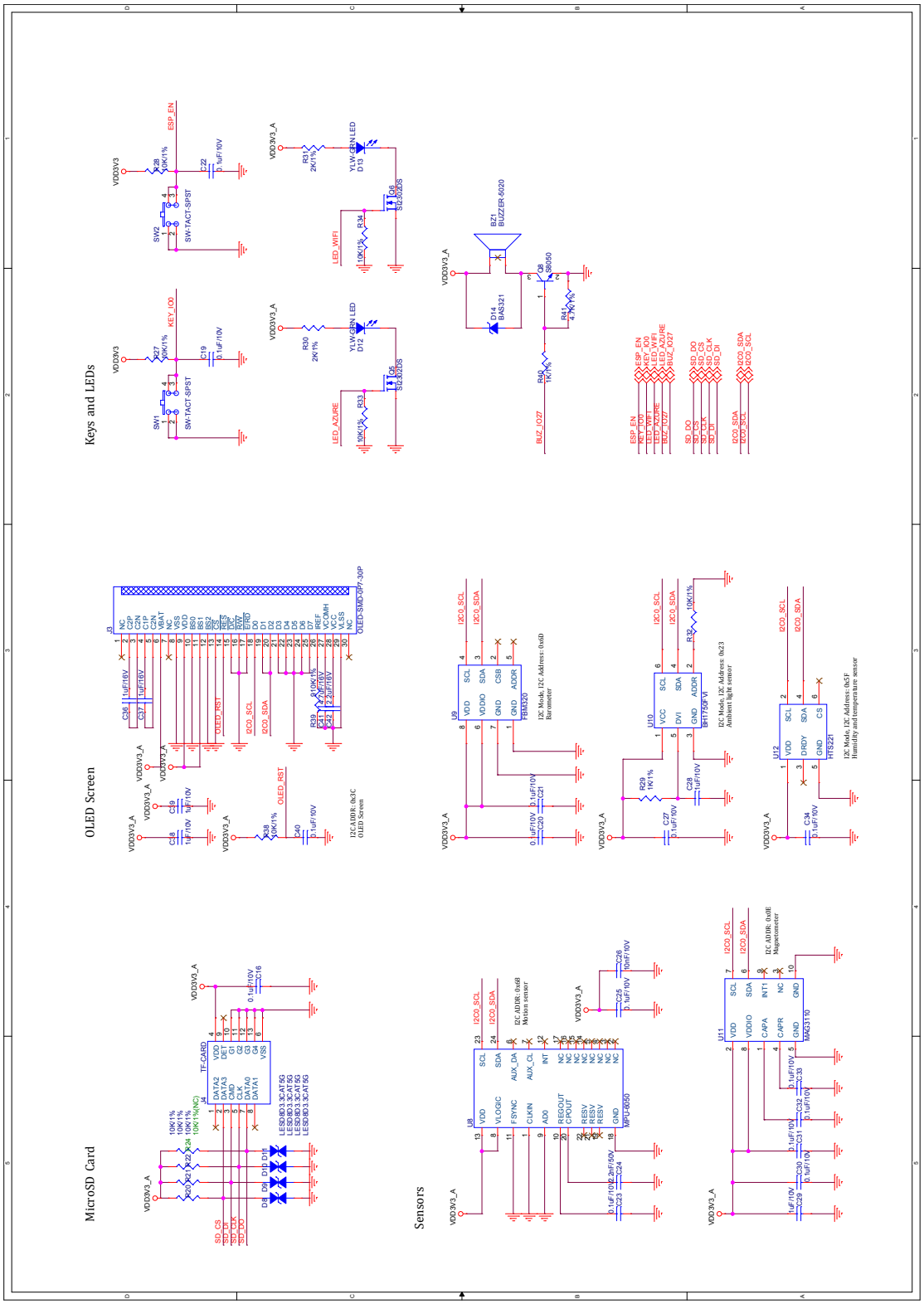
Keys and LEDs
OLED Screen
MicroSD Card
Sensors

Espressif IoT Team

www.espressif.com

Disclaimer and Copyright Notice

Information in this document, including URL references, is subject to change without notice.

THIS DOCUMENT IS PROVIDED AS IS WITH NO WARRANTIES WHATSOEVER, INCLUDING ANY WARRANTY OF MERCHANTABILITY, NON-INFRINGEMENT, FITNESS FOR ANY PARTICULAR PURPOSE, OR ANY WARRANTY OTHERWISE ARISING OUT OF ANY PROPOSAL, SPECIFICATION OR SAMPLE.

All liability, including liability for infringement of any proprietary rights, relating to use of information in this document is disclaimed. No licenses express or implied, by estoppel or otherwise, to any intellectual property rights are granted herein.

The Wi-Fi Alliance Member logo is a trademark of the Wi-Fi Alliance. The Bluetooth logo is a registered trademark of Bluetooth SIG.

All trade names, trademarks and registered trademarks mentioned in this document are property of their respective owners, and are hereby acknowledged.

Copyright © 2018 Espressif Inc. All rights reserved.