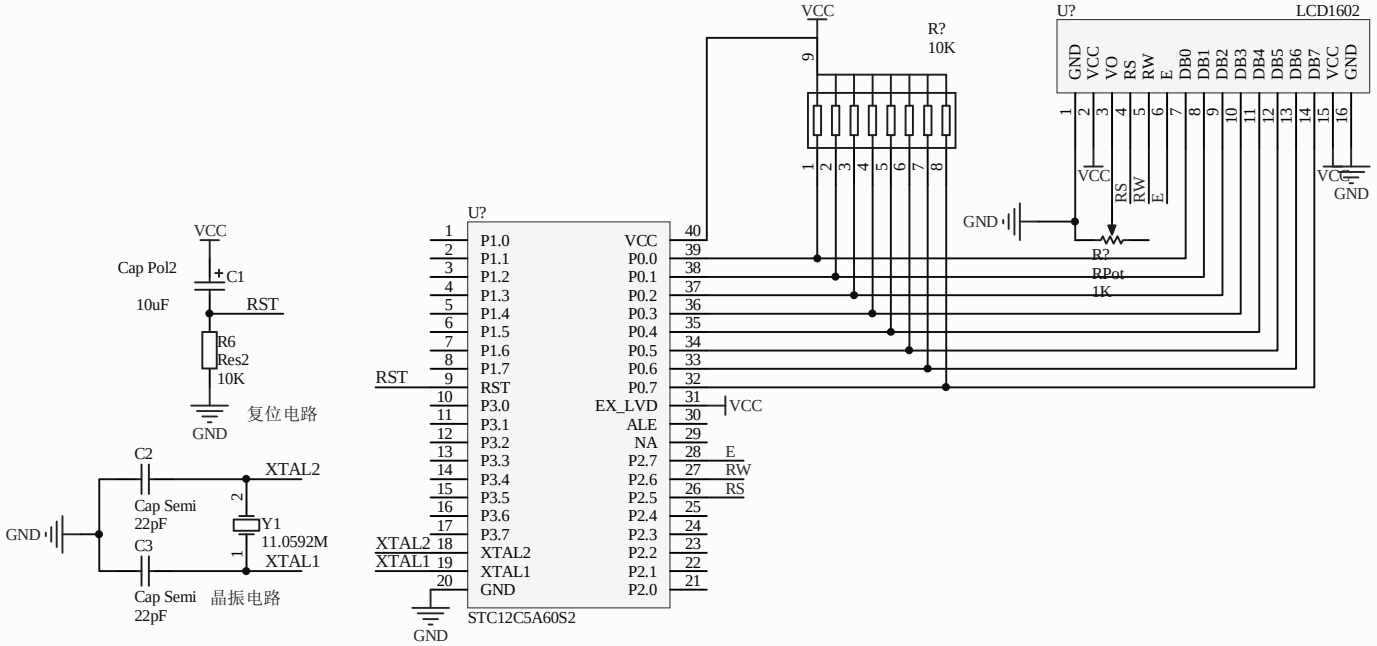

Title			
Size A4	Number		Revision
Date: 2018/7/20		Sheet of	
File: C:\Users\..\Sheet1.SchDoc		Drawn By:	