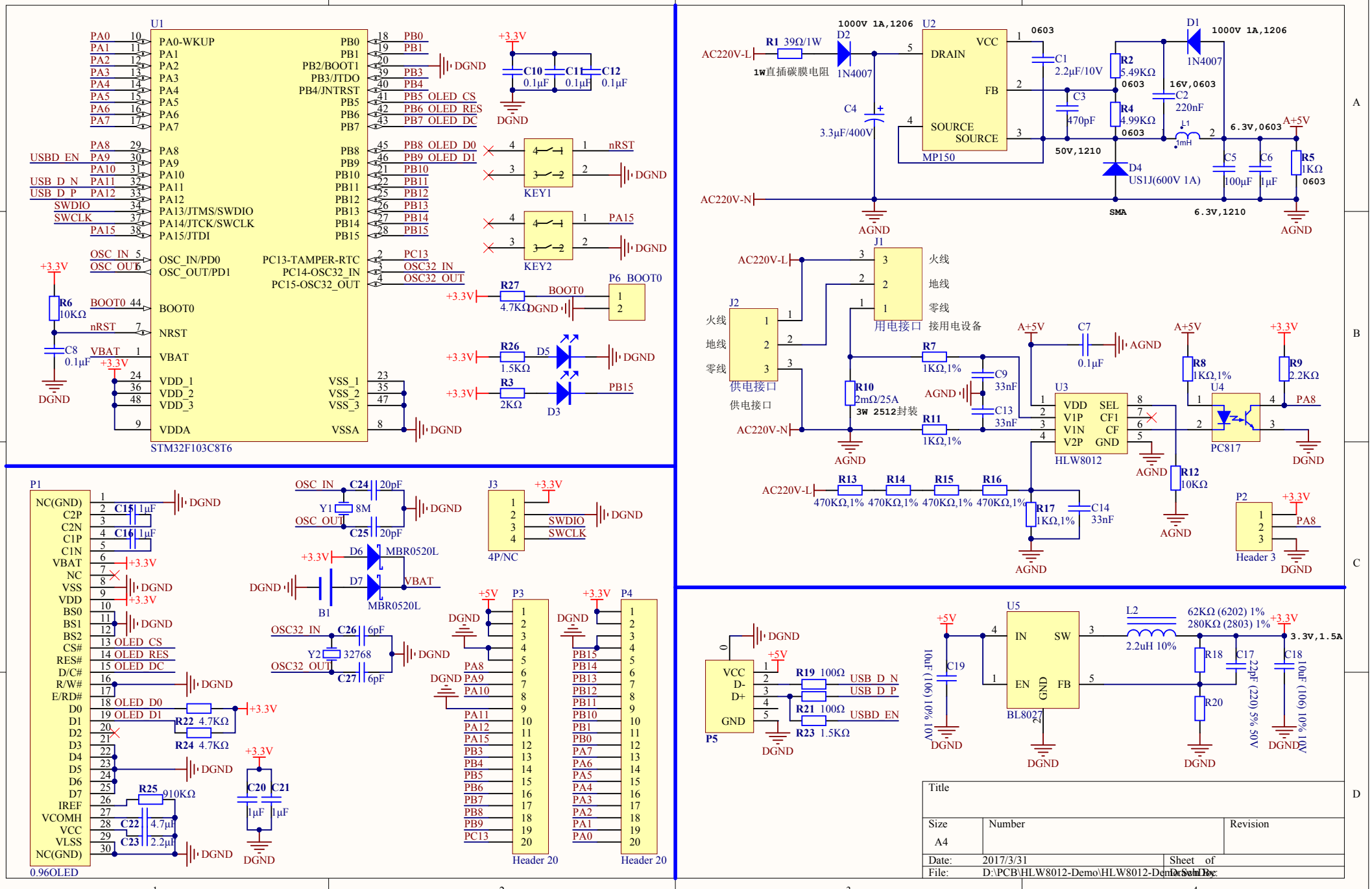
U1
STM32F103C8T6
PA0-WKUP
PA1
PA2
PA3
PA4
PA5
PA6
PA7
PA8
PA9
PA10
PA11
PA12
PA13/JTMS/SWDIO
PA14/JTCK/SWCLK
PA15/JTDI
OSC_IN/PD0
OSC_OUT/PD1
BOOT0
NRST
VBAT
VDD_1
VDD_2
VDD_3
VDDA
PB0
PB1
PB2/BOOT1
PB3/JTDO
PB4/JNTRST
PB5
PB6
PB7
PB8
PB9
PB10
PB11
PB12
PB13
PB14
PB15
PC13-TAMPER-RTC
PC14-OSC32_IN
PC15-OSC32_OUT
VSS_1
VSS_2
VSS_3
VSSA
PB5_OLED_CS
PB6_OLED_RES
PB7_OLED_DC
PB8_OLED_D0
PB9_OLED_D1
OSC32_IN
OSC32_OUT
USBD_EN
USB_D_N
USB_D_P
SWDIO
SWCLK
KEY1
KEY2
P6_BOOT0
D5
D3
R6 10KΩ
R27 4.7KΩ
R26 1.5KΩ
R3 2KΩ
C8 0.1μF
C10 0.1μF
C11 0.1μF
C12 0.1μF
DGND
+3.3V
AC220V-L
AC220V-N
R1 39Ω/1W
1W直插碳膜电阻
D2 1N4007
1000V 1A,1206
C4 3.3μF/400V
U2
MP150
DRAIN
VCC
FB
SOURCE
SOURCE
C1 2.2μF/10V
0603
C3 470pF
50V,1210
R2 5.49KΩ
R4 4.99KΩ
D4 US1J(600V 1A)
SMA
D1 1N4007
C2 220nF
16V,0603
L1 1mH
C5 100μF
C6 1μF
6.3V,0603
6.3V,1210
R5 1KΩ
A+5V
AGND
J1
火线
地线
零线
用电接口
接用电设备
J2
供电接口
R10 2mΩ/25A
3W 2512封装
R7 1KΩ,1%
R11 1KΩ,1%
C9 33nF
C13 33nF
C7 0.1μF
U3
HLW8012
VDD
V1P
V1N
V2P
SEL
CF1
CF
GND
R8 1KΩ,1%
R12 10KΩ
U4
PC817
R9 2.2KΩ
PA8
R13 470KΩ,1%
R14 470KΩ,1%
R15 470KΩ,1%
R16 470KΩ,1%
R17 1KΩ,1%
C14 33nF
P2
Header 3
P1
0.96OLED
NC(GND)
C2P
C2N
C1P
C1N
VBAT
NC
VSS
VDD
BS0
BS1
BS2
CS#
RES#
D/C#
R/W#
E/RD#
D0
D1
D2
D3
D4
D5
D6
D7
IREF
VCOMH
VCC
VLSS
NC(GND)
OLED_CS
OLED_RES
OLED_DC
OLED_D0
OLED_D1
R22 4.7KΩ
R24 4.7KΩ
R25 910KΩ
C15 1μF
C16 1μF
C22 4.7μF
C23 2.2μF
C20 1μF
C21 1μF
OSC_IN
OSC_OUT
C24 20pF
C25 20pF
Y1 8M
D6 MBR0520L
D7 MBR0520L
B1
VBAT
OSC32_IN
OSC32_OUT
C26 6pF
C27 6pF
Y2 32768
J3
4P/NC
SWDIO
SWCLK
P3
Header 20
P4
Header 20
+5V
P5
VCC
D-
D+
GND
R19 100Ω
R21 100Ω
R23 1.5KΩ
USB_D_N
USB_D_P
USBD_EN
U5
BL8027
IN
SW
EN
FB
L2 2.2uH 10%
62KΩ (6202) 1%
280KΩ (2803) 1%
3.3V,1.5A
C19 10uF (106) 10% 10V
R18
R20
C17 22pF (220) 5% 50V
C18 10uF (106) 10% 10V
Title
Size
A4
Number
Revision
Date: 2017/3/31
Sheet of
File: D:\PCB\HLW8012-Demo\HLW8012-Demo.SchDoc

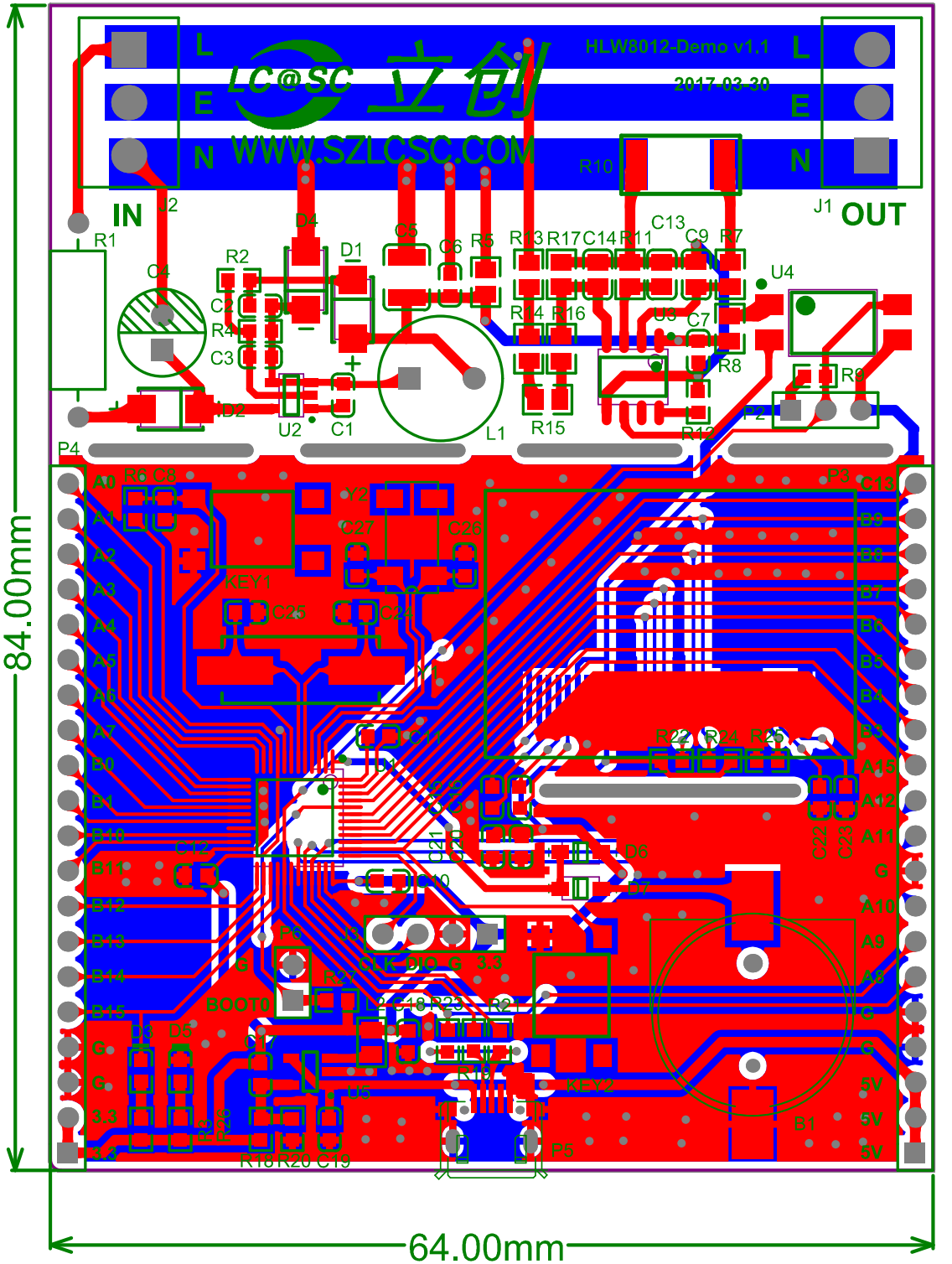
HLW8012-Demo v1.1
2017-03-30
LC@SC 立创
WWW.SZLCSC.COM
L
E
N
IN
OUT
J1
J2
R1
R2
R3
R4
R5
R6
R7
R8
R9
R10
R11
R12
R13
R14
R15
R16
R17
R18
R19
R20
R21
R22
R23
R24
R25
C1
C2
C3
C4
C5
C6
C7
C8
C9
C10
C11
C12
C13
C14
C15
C16
C17
C18
C19
C20
C21
C22
C23
C24
C25
C26
C27
D1
D2
D3
D4
D5
D6
D7
U2
U3
U4
U5
L1
B1
P2
P3
P4
P5
P6
KEY1
KEY2
BOOT0
Y2
A0
A1
A2
A3
A4
A5
A6
A7
B0
B1
B10
B11
B12
B13
B14
B15
G
3.3
5V
A15
A12
A11
A10
A9
A8
B9
B8
B7
B6
B5
B4
B3
C13
84.00mm
64.00mm